NPS Form 10-900 OMB No. 10024-0018 (Expires 5/31/2012)

United States Department of the Interior
National Park Service

National Register of Historic Places Registration Form

This form is for use in nominating or requesting determinations for individual properties and districts. See instructions in *How to Complete the National Register of Historic Places Registration Form* (National Register Bulletin 16A). Complete each item by marking "x' in the appropriate box or by entering the information requested. If an item does not apply to the property being documented, enter "N/A" for "not applicable." For functions, architectural classification, materials, and areas of significance, enter only categories and subcategories from the instructions. Place additional entries and narrative items on continuation sheets (NPS Form 10-900a). Use a typewriter, word processor, or computer, to complete all items.

1. Name of Property

historic name Marty, Albert, Building

other name/site number Gustin-Bacon Manufacturing Company Building; Plant Number 1 and 2

2. Location

street & town 1412-1418 W. 12th Street N/A not for publication

city or town Kansas City N/A vicinity

state Missouri code MO county Jackson code 095 zip code 64101

3. State/Federal Agency Certification

As the designated authority under the National Historic Preservation Act, as amended, I hereby certify that this ☒ nomination ☐ request for determination of eligibility meets the documentation standards for registering properties in the National Register of Historic Places and meets the procedural and professional requirements set forth in 36 CFR Part 60. In my opinion, the property ☒ meets ☐ does not meet the National Register criteria. I recommend that this property be considered significant ☐ nationally ☐ statewide ☒ locally. (☐ See continuation sheet for additional comments.)

Mark A. Miles Dec 17, 2012

Signature of certifying official/Title Mark A. Miles/Deputy SHPO Date

Missouri Department of Natural Resources
State or Federal agency and bureau

In my opinion, the property ☐ meets ☐ does not meet the National Register criteria. (☐ See continuation sheet for additional comments.)

Signature of certifying official/Title Date

State or Federal agency and bureau

4. National Park Service Certification

I hereby certify that the property is: Signature of the Keeper Date of Action

☐ entered in the National Register.
☐ See continuation sheet.
☐ determined eligible for the National Register
☐ See continuation sheet.
☐ determined not eligible for the National Register.
☐ removed from the National Register.
☐ other, (explain:)

Marty, Albert, Building
Name of Property

Jackson County, MO
County and State

5. Classification

Ownership of Property
(check as many boxes as apply)

- ☒ private
- ☐ public-local
- ☐ public-State
- ☐ public-Federal

Category of Property
(check only one box)

- ☒ building(s)
- ☐ district
- ☐ site
- ☐ structure
- ☐ object

Number of Resources within Property
(Do not include previously listed resources in the count.)

Contributing	Noncontributing	
1	0	buildings
0	0	sites
0	0	structures
0	0	objects
1	0	Total

Name of related multiple property listing
(Enter "N/A" if property is not part of a multiple property listing.)

"Railroad Related Historic Commercial and Industrial Resources in Kansas City, Missouri"

Number of contributing resources previously listed in the National Register

0

6. Function or Use

Historic Function
(Enter categories from instructions)

INDUSTRY/PROCESSING/EXTRACTION

Current Function
(Enter categories from instructions)

COMMERCE/TRADE

7. Description

Architectural Classification
(Enter categories from instructions)

LATE VICTORIAN: Romanesque Revival
OTHER: Industrial Facilities and Commercial Distribution
Buildings Property Type

Materials
(Enter categories from instructions)

foundation Stone
walls Brick
Glass
roof Asphalt
other

Narrative Description
(Describe the historic and current condition of the property on one or more continuation sheets.)

☒ See continuation sheet(s) for Section No. 7

8. Statement of Significance

Applicable National Register Criteria

(Mark "x" in one or more boxes for the criteria qualifying the property for National Register listing.)

☒ **A** Property is associated with events that have made a significant contribution to the broad patterns of our history.

☐ **B** Property is associated with the lives of persons significant in our past.

☒ **C** Property embodies the distinctive characteristics of a type, period, or method of construction or represents the work of a master, or possesses high artistic values, or represents a significant and distinguishable entity whose components lack individual distinction.

☐ **D** Property has yielded, or is likely to yield, information important in prehistory or history.

Criteria Considerations
(Mark "x" in all the boxes that apply.)

Property is:

☐ **A** owned by a religious institution or used for religious purposes.

☐ **B** removed from its original location.

☐ **C** a birthplace or grave.

☐ **D** a cemetery.

☐ **E** a reconstructed building, object, or structure.

☐ **F** a commemorative property.

☐ **G** less than 50 years of age or achieved significance within the past 50 years.

Areas of Significance

(enter categories from instructions)

COMMERCE

INDUSTRY

ARCHITECTURE

Period of Significance
1886-1964

Significant Dates
1886; 1886-1914

1914-1964

Significant Persons
(Complete if Criterion B is marked above)
N/A

Cultural Affiliation
N/A

Architect/Builder
Attrib: Van Brunt and Howe, architect

Prather, William M, general contractor

Narrative Statement of Significance
(Explain the significance of the property on one or more continuation sheets.)

☒ See continuation sheet(s) for Section No. 8

9. Major Bibliographical References

Bibliography
(Cite the books, articles, and other sources used in preparing this form on one or more continuation sheets.

Previous documentation on file (NPS):

☐ preliminary determination of individual listing (36 CFR 67) has been requested
☐ previously listed in the National Register
☐ previously determined eligible by the National Register
☐ designated a National Historic Landmark
☐ recorded by Historic American Buildings Survey #
☐ recorded by Historic American Engineering Record #

Primary location of additional data:

☒ State Historic Preservation Office
☐ Other State agency
☐ Federal agency
☒ Local government
☐ University
☒ Other Name of repository:

Missouri Valley Room, Special Collections, KCPL

☒ See continuation sheet(s) for Section No. 9

10. Geographical Data

Acreage of Property Less than one acre

Latitude/Longitude Coordinates
(Follow similar guidelines for entering the lat/long coordinates as describe on page 55, *How to Complete the National Register Registration Form* for entering UTM references. For properties less than 10 acres, enter the lat/long coordinates for a point corresponding to the center of the property. For properties of 10 or more acres, enter three or more points that correspond to the vertices of a polygon drawn on the map. The polygon should approximately encompass the area to be registered. Add additional points below, if necessary.)

1. Latitude: 39.101029 Longitude: -94.602173
2. Latitude: Longitude:
3. Latitude: Longitude:
4. Latitude: Longitude:

Verbal Boundary Description
(Describe the boundaries of the property.)
See Attached

Property Tax No.

Boundary Justification
(Explain why the boundaries were selected.)
See Attached

☒See continuation sheet(s) for Section No. 10

11. Form Prepared By

name/title Cydney E. Millstein and Maryann Warfield
organization Architectural & Historical Research, LLC date August 6, 2012
street & number 1537 Belleview Avenue telephone 816.472.4154
city or town Kansas City state MO zip code 64108

Additional Documentation

Submit the following items with the completed form:

Continuation Sheets
Maps A **USGS map** (7.5 or 15 minute series) indicating the property's location.
A **Sketch map** for historic districts and properties having large acreage or numerous resources.
Photographs: Representative **black and white photographs** of the property.
Additional items: (Check with the SHPO or FPO for any additional items)

Property Owner

name/title 3rd Millennium Development Company
street & number 13420 Santa Fe Trail Drive telephone 913.904.6747
city or town Lenexa state KS zip code 66215

Paperwork Reduction Act Statement: This information is being collected for applications to the National Register of Historic Places to nominate properties for listing or determine eligibility for listing, to list properties, and to amend existing listings. Response to this request is required to obtain a benefit in accordance with the National Historic Preservation Act, as amended (16 U.S.C. 470 *et seq.).*

Estimated Burden Statement: Public reporting burden for this form is estimated to average 18.1 hours per response including time for reviewing instructions, gathering and maintaining data, and completing and reviewing the form. Direct comments regarding this burden estimate or any aspect of this form to the Chief, Administrative Services Division, National Park Service, P.O. Box 37127, Washington, DC 20013-7127; and the Office of Management and Budget, Paperwork Reductions Projects (1024-0018), Washington, DC 20503.

SUMMARY

The Albert Marty Building, located at 1412-1418 W. 12th Street, Kansas City, Jackson County, is a five-story brick building designed in the Romanesque Revival tradition and constructed in 1886. Characterized by a four-story arcade which dominates the south or main facade, thick brick piers and contrasting stone trim and a heavily corbelled cornice that crowns the attic level, this Three-Part Commercial Block features a storefront at the first story, paired fenestration at the mid-section and a well-defined attic level, typical of this composition. The building is representative of the "Industrial Facilities and Commercial Distribution Buildings" property type as identified in the MPDF "Railroad Related Historic Commercial and Industrial Resources in Kansas City, Missouri." The building meets the registration requirements for individual listing under both Criterion A and C as it retains "a high degree of architectural integrity and setting material and workmanship" for its period of significance. The Albert Marty Building is an intact example of an industrial facility and commercial distribution building and retains the majority of its original character-defining elements thereby conveying its historic significance and period of construction. Except for the first story of the main façade, the building remains much as it was originally designed 126 years ago. Window units, while replacements, reflect the configuration, type and style of the original window design. Located adjacent to the western approach of the historic Twelfth Street Trafficway Viaduct in Kansas City's Central Industrial District or West Bottoms, the Albert Marty Building stands in a group of "the last remaining intact and unaltered rows of late 19th century commercial structures in Kansas City."[1] (See figure 1) To the east is the Creamery Package Manufacturing Company Building (1884); to the south is the Twelfth Street Trafficway Viaduct (1915); to the west is a large commercial warehouse (late 20th century) and to the north the Reeves and Company Building (later Gustin-Bacon; 1903) a brick, commercial building.

ELABORATION

The main façade, divided into six bays, faces south. A single-leaf entrance, modified from the original is located at the far west bay and is placed in a stone surround. Above the entrance is an original, modestly designed bracketed cornice. The storefront fenestration has been replaced with glass block, which is clearly illustrated in a 1940s Tax Assessment photograph of the property (See figures 2 and 3).[2] Presumably, the glass block alteration was made during the 1926 renovation.[3] As stated in the MPDF, "storefront alterations were common to this property type, and glass block was frequently used to enclose them."[4]

---

[1] Landmarks Commission, Kansas City, Missouri. *A Place In Time*. (Kansas City: Landmarks Commission, 1977),166.

[2] See Building Permit No. 82765, October 7, 1925, Landmarks Commission, Kansas City, MO. Although the permit does not specifically state what materials were used, it does call for an alteration of 50 feet of storefront for $5,000. According to three Sanborn Maps, the building measures 65 feet by 112 feet.

[3] *The Kansas City Star,* 10 January 1926, n.p. The glass block, more than likely, was added as a response to flooding in the West Bottoms.

[4] Sally Schwenk, "Railroad Related Historic Commercial and Industrial Resources in Kansas City, Missouri." MPDF National Register of Historic Places Nomination, November 2000, Section F-1.

A four-story arcade dominates the main façade where wide, thick brick piers separate each bay. The second and third-story fenestration is segmental arched with corbelled, pilaster surrounds. Windows at these floors are paired one-over-one, double-hung sash units with transoms (possibly fixed). The fourth-story arched fenestration (recessed) is tripartite; the central unit is one-over-one, double-hung, sash with a transom, flanked by fixed, divided units. The terminating attic story, resting below a heavily corbelled cornice, features double-hung, sash wood window units set in groups of four separated from each bay with wide, brick piers. Non-continuous, molded and corbelled string coursing separates the storefront level from the second story while a continuous, molded stringcourse is featured between the fourth and fifth stories.

Additional features of the south façade include stone lug sills, stone bulkhead and column bases, and Doric styled capitals (with corbelling) from which spring each arch.

Like the south or main façade, the west façade generally reflects the original design. Sparsely articulated, except for a minimal number of double-hung, sash window units set in segmental arches at the second through fifth floors, the west façade mainly reads as a masonry wall. Despite the first floor fenestration, which has been infilled with glass block (like that of the storefront level of the main façade), the west façade has seen scant modification over the years. A one-story, two bay brick and concrete block addition, with flat roof, overhead garage doors on either side of a single-leaf door, placed at the far north end, is an additional modification. The single-leaf man door, set in an original segmental arched opening, appears to be a replacement.

Signage seen on the west façade reads Columbia Burlap Bag Co. while the series of tie rods are located between the third and fourth and fourth and fifth floors.

The north façade, linked to the adjacent building by a bridge at the third story, features original wide arched openings that have been modified with overhead doors, infill, and industrial sash fenestration at the reinforced concrete loading dock (built in 1918), or first story, level. The upper story fenestration is set in original segmental arches. While the window units are replacements from the initial wood units, their configuration (one-over-one) duplicates the original design as seen in historic images. Lug sills are stone and fire escapes are placed at the third and ninth bays.

The east façade shares a party wall with the adjacent building.

An elevator penthouse is placed at the northwest corner of the building. The flat roof features terra cotta coping at the south, west and north facades. (Figure 4)

Interior

Much of the original interior materials of the Albert Marty Building are intact including columns and beams of heavy timber. Exposed floor rafters are wood and walls are exposed brick. Floors are a combination of concrete (first floor) and wood at the upper stories. It is important to note that the current condition of the main floor reflects the interior features and arrangement as illustrated in the 1939 Sanborn Map, most likely the result of the 1926 remodeling.

The first floor of the Albert Marty Building, as shown in the 1896 Sanborn Map, featured four office partitions (facing the south or main façade) and two elevators positioned at either side of the demising wall. Columns appear exposed. (Figure 4)

The 1939 Sanborn Map illustrates changes to the first floor. These changes include: removal of the four office partitions; the removal of the elevator at the west side of the demising wall and the addition of a large freight elevator at the northwest section of the building; openings were placed at the demising wall (thus giving full access to the first floor); the addition of an automatic sprinkler system, and the construction of a one-story addition to the northwest corner of the building. All of these features are extant.[5] (Figure 4) Upper floors retain original staircases leading to artists' loft spaces, divided much like the office spaces that were leased to other companies from the date of the building's construction to the first decades of the 20th century. The walls to the lofts are removable.

[5] While it was stated that the 1926 remodeling included the addition of a tiled entrance, it is not known if the tile was placed at the outside entrance or the interior. Interior tile may be covered by the existing carpeting.

STATEMENT OF SIGNIFICANCE

The Albert Marty Building, located at 1412-1418 West 12th Street, Jackson County, is locally significant under National Register Criteria A and C in the areas of COMMERCE and INDUSTRY and ARCHITECTURE. This building was commissioned in 1886 by Albert Marty, an important Kansas City real estate developer in industrial, business and residential properties. The Albert Marty Building served as office and warehouse distribution space for representatives of various agricultural implement companies, one of the largest commercial business types located in the West Bottoms. In 1914, this building became the location of the Gustin-Bacon Manufacturing Company headquarters and research laboratory. The firm initially started as a supplier to the rail and automotive industries and later became instrumental in the development and manufacturing of pipefittings, valves, rubber hosing, and later fiberglass products, including insulation.[6] It was at this location that Gustin-Bacon experienced their period of greatest growth and expansion. As the company grew, they expanded into research and development of their patented product lines, which were developed in the laboratory located in the Marty Building. In 1942, just prior to the United States entry into World War II, the firm was recruited by the Department of the Navy into war production for the manufacturing of fiberglass supplies used in military aircraft and shipbuilding. In addition, by 1950, every railroad company in the United States relied heavily on Gustin-Bacon products for efficient maintenance and operation. The firm remained at this location until 1961 at which time the main office relocated to a new facility in Fairfax, Kansas.[7] The Albert Marty Building exemplifies the building types as outlined in the MPDF: "Railroad Related Historic Commercial and Industrial Resources in Kansas City, Missouri." When the new Union Depot opened in 1878, at West 12th and Union Avenue, the West Bottoms of Kansas City became the primary industrial freight area of the region thereby spurring the history and growth of Kansas City's rail transportation and its commercial and industrial development.[8] The architectural significance of this building is found in the Romanseque Revival style which exemplifies a "commonality of its original function and property type as a representative example of the commercial style of architecture designed by architects of the late nineteenth century," as stated in the MPDF. The architectural firm responsible for its design has not yet been identified, however, its design is characteristic of the work of Van Brunt & Howe, Kansas City. The development of the Albert Marty Building coincides with the historic contexts identified in the aforementioned MPDF cover document. After Gustin-Bacon moved to their new facility, the building was occupied by various tenants including Columbia Burlap Bag Manufacturing Company, a tire company and most recently, an antique vendor. The period of significance for COMMERCE is 1886 through 1914 when the building served as office space for local sales representatives of various agricultural implement

---

[6] Albert L. Gustin, Obituary. *The Kansas City Star* 29 August 1943. In the obit, William Jeffers, president of the Union Pacific Railroad stated that "the excellency of his plants made it possible for him to say that every train carried a Gustin-Bacon product."

[7] "Gustin-Bacon Manufacturing Company, 1412-18 West 12th Street, Kansas City, Missouri," City Directory, multiple years, Microfilm. Special Collections, Kansas City Public Library, Kansas City, Missouri. Gustin-Bacon merged with the Certainteed Corporation, manufacturers and suppliers of building materials in 1965.

[8] Sally Schwenk, "Railroad Related Historic Commercial and Industrial Resources in Kansas City, Missouri." MPDF National Register of Historic Places Nomination, November 2000, 17-20.

companies. The period of significance for INDUSTRY is 1914 through 1964, the period in which Gustin-Bacon Manufacturing Company occupied the building.[9] The period of significance for ARCHITECTURE is 1886, the date of construction.

ELABORATION

After the Civil War ended, the West Bottoms had a slow but steady development as a major industrial and rail center in Kansas City, Missouri. During the 1870s, Kansas City's Chamber of Commerce reorganized and became supporters of further developing Kansas City as a railroad center. When the Hannibal Bridge opened in 1869, it was the first railroad bridge to cross the Missouri River and provided the first connection to the rail lines east of the Missouri River. In 1878, the completion of the new Union Depot in the West Bottoms made Kansas City an important railroad center.

> Steam engines like the Hannibal raced from Kansas City to Chicago at speeds over 30 miles per hour after 1869 when the Hannibal Bridge across the Missouri River linked the existing lines. The completion of the bridge set off a railroad boom and made Kansas City the hub of a rail network extending into the Great Plains and the Southwest.[10]

Wholesale agricultural implement companies were among the first and most dominant industries to arrive in the West Bottoms around 1868.This growth helped to increase real estate values and by 1878, Kansas City dominated the agricultural implement market nationwide, handling approximately 5 million dollars of goods annually adding to the vitality of businesses moving to and developing the West Bottoms.[11]

The Farm Implement Industry, as outlined in the MPDF, "Railroad Related Historic Commercial and Industrial Resources in Kansas City, Jackson County, Missouri" was of vital importance to the growth of the West Bottoms.

> By 1887, every manufacturer of agricultural implements and machinery in the United States had representatives in Kansas City and the city's implement firms sold 75,000 box carloads of farm equipment a year. Annual sales rose to $35 million in 1914. Indications of the city's prominence in the field were the 1887 National Agricultural Exposition, and the 1901 12th Annual Convention of Western Implement and Vehicle Dealers Association, both held in the city.[12]

---

[9] Gates City Directories, Kansas City Directories, various dates between 1898-1968.
[10] Sherry Lamb Schirmer and Richard D. McKinzie, *At the River's Bend,* (Woodland Hills, CA.: Windsor Publications Inc., 1982), 43.
[11] Melanie A. Betz, "Final Report: Central Industrial District Survey, Kansas City, Missouri 1988," Landmarks Commission, Kansas City Missouri. 10-12.
[12] Sally Schwenk, "Railroad Related Historic Commercial and Industrial Resources in Kansas City," E. 14.

Albert Marty, an important and well-connected Kansas City land developer and real estate investor began investing in tracts of land in and around the Kansas City area in the late 1870s. Several blocks of property in the West Bottoms and extending westward into the Rosedale area of Kansas City, Kansas were in his possession as early as 1880.[13]

In September 1886, Marty commissioned the construction of a warehouse building at 1412-1418 W. 11th Street.[14] At that time, Marty's brother-in-law Robert Gillham was the city engineer who was responsible for the 9th Street Incline, the 8th Street Tunnel and the development of the Kansas City Street Railway. This connection alone would have given Marty access to vital information concerning the city's plan for development of the region that allowed him to make very lucrative property investment decisions.[15]

The Albert Marty Building was ideally located in proximity to Union Depot, which was built in 1877 (and operational by 1878) at the intersections of West 11th Street and Liberty Avenue. Marty's Building was situated between Liberty and Hickory avenues on the north side of 11th Street, within a block of the depot. Beginning in January 1887, Albert Marty purchased space in the weekly editions of *The Kansas City Journal* to advertise the availability of his new building that included the adjacent railroad sidings.[16] This location offered his future tenants convenient shipping access for industrial and commercial supplies both in and out of Kansas City.[17]

Albert Marty Building: 1886-1914

Built as a warehouse in the industrial manufacturing and warehouse section of the West Bottoms, the Albert Marty Building was first let under four separate addresses: 1412, 1414, 1416 and 1418 West 11th Street (W. 12th Street after 1912).[18] The first occupants included various farm implement suppliers, who used the building as office and warehouse space for their local representatives. Some of the companies that occupied the Marty Building during its first decade include Marseilles Manufacturing and Peru Plow in 1886, the firms of Stowe Brokerage Firm and Kansas City Hardware Company in 1887.[19]

By 1890, the firm of D. M. Osborn and Company, retailers of reapers and mowers, occupied the west half of the building (1416-1418 W. 12th Street) and remained there until the early 1910s.

---

[13] Albert Marty, Advertisements "Real Estate For Sale," *The Kansas City Journal,* Date samplings between 1880 and 1887. Microfilm, Kansas City Public Library, Kansas City, Missouri. In the late 1870s, Marty joined his father in law, Jemuel Gates, in real estate investment. Gates had left Gates and Kendal in order to build his own real estate investment business and devoted the remainder of his life to real estate development. He was reported to be one of the largest property owners in Kansas City, Missouri at the time of his death in 1915.

[14] Water Permits, City of Kansas City Water Department, # 5924 and 5925.

[15] "Albert Marty/Marty Family,1886-1930," various newspaper clippings article, microfilm index, Special Collections, Kansas City Public Library.

[16] "For Sale," Real Estate listings, *The Kansas City Journal* January 1887, multiple dates, Microfilm, Kansas City Public Library, Kansas City Missouri.

[17] At the time the building was constructed the address for the building was 1412-1418 West 11th Street. As a result of the construction of the 12th Street Viaduct , it was necessary to rename the streets in the West Bottoms. Subsequently, 11th Street became 12th Street.

[18] "Down Comes a West Bottoms Landmark," Microfilm, Missouri Valley Room, Kansas City Public Library, Kansas City, Missouri. July 1912.

[19] Ibid.

Since the majority of products and equipment sold by these firms were not manufactured in Kansas City, the representatives relied heavily on the ease of access to the rail lines for the shipment of the equipment and product lines from the manufacturing firms that they represented.

On June 2, 1903, the West Bottoms suffered a severe flooding of the Missouri River, which crested at 12.9 feet above the natural riverbank. The flood destroyed most of the older buildings in the West Bottoms. In 1908, after another flooding of the Missouri River, Adriance Van Brunt made recommendation to the city on the further development of the West Bottoms. He suggested that basements be eliminated from all future construction plans and that heating plants be placed on the roofs. Additionally, Van Brunt suggested that the "first floors be raised four feet above ground level and using a solid foundation employing a granatoid floor."[20] Even with the new codes in place, flooding would remain an issue for this industrial area.[21] Marty's Building stood the test of the 1903 and 1908 floods, remaining a steadfast anchor of industrial activity in the West Bottoms.

Railroad Related Historic Context: Gustin-Bacon Manufacturing Company

The historic context as written in the Multiple Property Documentation NR Form titled "Railroad Related Historic Commercial and Industrial Resources in Kansas City, Jackson County, Missouri," provides useful information about the evolution of the West Bottoms as it applies to the Albert Marty Building and its main occupant, the Gustin-Bacon Manufacturing Company, who owned the building from 1914 through 1964.[22]

The history of the Gustin-Bacon Manufacturing Company is one of progressive growth and development of an industrial manufacturing facility located in the West Bottoms. Gustin-Bacon's history aligns with the description of the property sub-type "Industrial Manufacturing Facilities and Warehouses" as described in the MPDF. The following excerpts provide the framework in which Gustin-Bacon best exemplifies its importance in relation to the MPDF.[23]

> These facilities incorporate space in their plans for manufacturing and processing, offices and storage. They may have adjacent or nearby buildings used for warehouse purposes as well. Manufacturing areas may include special interior and exterior spaces and structures for fabrication and extractive processes. Those erected during the late nineteenth and early twentieth century reflect popular commercial architectural styles. The larger of the buildings

---

[20] Cydney Millstein, "Sewall Paint and Glass Company Building," National Register of Historic Places, August 2001, 9.
[21] Betz, 15.
[22] The date given reflects the period of time that Gustin-Bacon owned the Marty Building. The Marty Building served as the Gustin-Bacon corporate offices from 1914-1961. After 1961, the Mary Building was used as extra warehouse space the G-B product lines.
[23]

> erected during this period include up to eight stories reflecting division of labor on a vertical hierarchy.[24]

Gustin-Bacon's history is also aligned with the description of "Manufacturers," also outlined in the MPDF.[25]

> As each industrial enclave became established near freight lines, manufactures of a wide array of products erected [or later occupied] plants and warehouses. Products manufactured and distributed by Kansas City industries included …metal fillings, valves; pumps, tanks, and well machinery; gas, electric, diesel and kerosene engines; … and engineering supplies; and refrigeration units...
>
> Turning out war material during W.W.II raised the capacities of manufacturers in the surrounding towns of the region at a time older manufacturing centers in cities produced less. Industrial mobilization for the war actually began shortly after Hitler invaded Poland in 1939 and reached maximum capacity in 1943.[26]

Gustin-Bacon Manufacturing Company: West Bottoms, 1900-1964

The founder of Gustin-Bacon Manufacturing Company was Albert Lyman Gustin, an innovative and progressive Kansas City business owner. Gustin was born in Neponset, Ill., June 1875 arriving in Kansas City, Missouri at the age of 18 and remained in Kansas City until his death in August 1943, at which time he resided at The Walnuts, 5049 Wornall Road, Kansas City Missouri. He had recently come out of semi-retirement, at the request of the Navy, to head the war production program at Gustin-Bacon's new fiberglass facility in Fairfax, Kansas City, Kansas.[27]

Albert Gustin's early employment in the railroad industry introduced him to the possibilities for improvements to the shipping industry. His acumen would later lead to the development of numerous new product lines that crossed into applications beneficial to a variety of industries beyond the railroad.

> In 1896 he became a tinner's helper in the shops of the Kansas City, Ft. Scott & Memphis Railroad Co., in Kansas City, Mo. Later he transferred to the purchasing department of the railroad as a clerk. In 1898 he entered the railway supply business under his own name as a manufacturers' agent in Kansas City,

---

[24] Schwenk, F.2..

[25] While the building at 1412-18 W. 12th Street was examined in the MPDF and in a CID Survey, although on a cursory level, the Gustin-Bacon Company, owner of the building for nearly 50 years and undoubtedly the most significant , was never mentioned in either study.

[26] Ibid, E.15-16.

[27] Albert Lyman Gustin, Obituary, *The Kansas City Star* 30 August 1943. Microfilm, Missouri Valley Room Kansas City Public Library. Kansas City Missouri. The Gustin residence for several decades was 5265 Sunset Drive, Kansas City, Missouri. Albert Gustin, along with his wife, moved to the Walnuts when he decided to retire.

> dealing especially in mechanical rubber goods. In 1901 he formed a partnership with Crayton H. Boyer under the firm name of Gustin & Boyer. This firm dealt chiefly in railway, packinghouse and mill supplies. In 1903 the Gustin-Boyer Supply Co. was incorporated, with Gustin as president. The name of the corporation was changed in 1904 to the Gustin-Bacon Manufacturing Co., the company having broadened the scope of its activities to include manufacturing.[28]

Albert Gustin chose the West Bottoms for the location of his new business. During the 64 years of Gustin-Bacon Manufacturing Company history, it remained within a four-block radius of its first location as Gustin & Boyer. Albert Gustin's partner at this time was Crayton H. Boyer who was formerly the chief clerk and superintendent of the MP&M and the KCFS&M railroad shops.

The two men joined forces in 1901 as supply agents of belting, hose, railroad lanterns and packing supplies to the rail industry. Their shared office was located at 1306 St. Louis Avenue that was also a liquor wholesale outlet. This building (demolished) was located about four blocks northeast of the Albert Marty Building. By 1902, the success of their new business allowed them to move to larger quarters at 1408-10 W. 11th Street (W. 12th after 1912), which is adjacent to the Marty Building. The company remained at this location until 1909.[29]

In 1904, Fred L. Bacon joined Gustin-Boyer as a salesperson. Albert Gustin was president of the firm while Boyer was the vice president and treasurer. The company was listed as "Gustin-Boyer Supply Company" under "Manufacturing Agents" in the city directory. In 1905, the Boyer remained with the company as secretary and treasurer but by 1909, he was no longer affiliated with the company.[30]

A 1905 advertisement in the city directory listed the Gustin-Bacon Mfg. Co., offering Railway, Packing House and Mill Supplies that included leather and rubber belting; water, steam, air, fire mill and garden hose; packing; clamps; valves; and a dozen other forms of supplies that were instrumental to the rail industry. [31] (Figure 5)

The year 1909 marked a major change for the firm at which time their business diversified. Although they still served as agents for certain products used by the rail industry, Gustin-Bacon began manufacturing their own line of products, primarily pipes and rubber hosing for the railroad and the oil and gas industries.[32] In addition, with the advent of the automobile, they were a distributorship for Diamond Tires manufactured in Akron, Ohio. Gustin-Bacon remained at this location until 1914.[33]

---

28 "Albert L. Gustin," *The National Cyclopedia of American Biography, XXXII* (NP.: New York, 1945), 374-375.

29 " Gustin-Boyer Manufacturers Agents," *Gates Kansa City Directory:1902,* (Kansas City: Gates *City D*irectory, *1902), 520.*

30 Ibid, City Directories, 1903-1909.

31 Gustin-Bacon Mfg. Co. *Kansas City, Missouri ; City Directory, 1905. 1417 W. 11th* Street and 1412-18 West 12th Street are connected by a sky walk on the third floor and share the alley and loading dock area. By 1939, 1408 -1410 W. 12th Street was later let to the Creamery Company.

32 Ibid.

33 *Ibid,* 1909-1915.

In 1912, the city decided to replace the 12th Street Incline from the West Bottoms with a new viaduct. Demolition of a row of buildings, known as "Hay Row" situated between 11th and 12th Streets from Mulberry to Liberty streets was under way before the end of that year (Figure 6). Construction on the new viaduct began shortly thereafter. It was at this time that West 11th Street became West 12th Street. With the announcements of a new 12th Street Trafficway Viaduct, many businesses located within the area looked to expand while new businesses were enticed to relocate to the West Bottoms.

Gustin took advantage of the new viaduct's location and decided to move his company. By 1914, just prior to the viaduct's completion, the Gustin-Bacon Manufacturing Company purchased the immediate corner, 50 x 100 feet of the western half of the Albert Marty Building, 1416-18 W. 12th Street, which sat at the very bottom of the northwest end of the new viaduct.[34] This move gave Gustin-Bacon increased visibility and the potential to expand their production facility as the building space was needed and became available.[35]

The years from 1914 to 1920 continued to be growth years for Gustin -Bacon. The firm rented out the fourth and fifth floors of 1416-1418 W. 12th Street to tenants, while making a part of the ground floor available to the Station "A" post office until their business grew. By 1920, Gustin-Bacon had expanded their business to the entire five floors of the 1412-1418 West 12th Street building.

Gustin-Bacon's need for further expansion had been inevitable. This was largely due to their research and development work that allowed them to develop their own product lines as well as make improvements to existing equipment, parts and production methods. The success that the firm achieved through its laboratory was the catalyst for a major corporate expansion.

In 1926, Gustin-Bacon established a permanent home at 1412-1418 West 12th Street. To mark their success, the building received a major exterior facelift and interior remodel to suit the new home for their corporate headquarters and the center for research and development of future Gustin-Bacon products. In an interview, Albert Gustin stated, "… Gustin-Bacon Company owned and occupied but half the building. With the purchase of the east half also came the sense of permanence."[36]

The entire building was given a thorough renovation. The exterior brick façade was sandblasted and tuck pointed, while all exposed woodwork, including windows, were repaired, cleaned and painted.[37] Likewise, the interior received a complete remodel to house the firm's new corporate front lobby, which covered the entire 100-foot length of the first floor. The entrance hallway,

---

[34] "Gustin-Bacon Manufacturing Co.," *The Kansas City Star* 10 January 1926. Microfilm, Missouri Valley Room. Kansas City Public Library.
[35] City Directories.
[36] "Gustin-Bacon Manufacturing Co.," *The Kansas City Star* 10 January 1926. In addition to the company headquarters, this was also the location of the G-B research and development laboratory where over forty patents were developed and assigned between 1923 and approximately 1961. The exact date that the laboratory and main office moved to the Kansas location is unknown.
[37] Ib*id.*

leading back to the corporate offices, was tiled. The office spaces were laid with "...hard maple wood floors; the walls redecorated in cheerful tones; the entire office was re-illuminated; modern blinds are at the windows; new office furniture [was added] in keeping with the new atmosphere." [38]

Two years prior to the renovations of Gustin-Bacon, the West Bottoms had received a new designation as the Central Industrial District of Kansas City. A surge in business growth was underway and Gustin-Bacon became a model platform for the changes that were taking place. The firm became the best example of business in the West Bottoms as illustrated in the following statement made by *The Kansas City Star* in 1926:

> …the substantial old structures of the Central Industrial District can be made modern and efficient business homes. A district like that should not be content to "grow old gracefully." It can renew itself. In this, remodeling and renovations are almost as important as new construction. If it were possible every property owner should be mailed 'before and after' photographs of the Gustin-Bacon building and offices, and every tenant a report of the increase attained in office efficiency.[39]

In addition to the 1926 purchase of the Marty Building, several ancillary buildings supplied Gustin-Bacon with additional floor space for warehousing and manufacturing to handle the manufacturing needs of Gustin-Bacon's increasing product line. While the exact dates or nature of acquisitions is unknown, sporadic listings appeared in Kansas City directories between 1926 and 1965 that listed the basic use of each location. (Figure 7)

1412-18 West 12th Street:	Main Office, Laboratory and Plants No.1 and 2
1404 West 12th Street:	Plant No. 3
1400 West 12th Street:	Plant No. 4
1417 West 11th Street:	Machine Shop and Warehouse

The building directly north of the main office, located at 1417 W. 11th Street, appeared on a 1926 insurance map showing the bridge, constructed in 1927, at the second level that still connects the 11th Street building to the 1412-18 W. 12th Street building. In addition, a 1926 news article refers to this building as part of Gustin-Bacon, housing the machine shop and additional warehouse.[40] Warehouse and manufacturing space for Gustin-Bacon's extensive product line was crucial to their operation.

The Gustin-Bacon product line included a variety of items with purposes as required by their industry clients. The table of contents found in the back of a "Gustin-Bacon: 1928 Product Catalog" was a five-page listing of a variety of products that were manufactured and sold by the firm. An array of belting clamps, valves, hose, packing, gaskets, pulleys, transmissions, shovels,

---

38 Ibid.
39 *Ibid*
40 "Gustin-Bacon Manufacturing Co.," *The Kansas City Star* 10 January 1926.

scoops picks and spades, as well as numerous accessories such as abrasives, brake cylinders, wheels, mats, tapes and respirators filled the 148 page catalog.[41]

The industries that utilized Gustin Bacon products were also varied. In addition to the aforementioned railroad industry, among the largest end users of Gustin-Bacon products were automobile manufacturing companies, the oil and gasoline industry, the aircraft industry and the military.

The Gustin-Bacon laboratory was a very important component of their successful product line. Although it is known that the laboratory was located in the building with the corporate offices, the exact date that the firms established their research and development laboratory is unknown. The first patent located was related to the railroad industry. Patent No. 1,692,766, was for a fluid pressure horn with multiple tones for use on locomotives. Harley E. Anderson, an employee of Gustin-Bacon Manufacturing, developed this product. Gustin-Bacon was listed as the assignor. The patent was filed on June 22, 1928 and registered by November 20, of the same year.[42] (Figure 8)

Research was tantamount to the firm's successes. Not only did they develop new product lines but they also researched the way in which a product was made, resulting in patents for special machinery and techniques used in their manufacturing process. One example of this innovative thinking can be seen in the production method for making a rubber-lined pipe used in transporting chemicals that would otherwise corrode metal piping. Patent No. 2,312,993, that named G-B employee J. F. Stevens as the inventor and Gustin-Bacon as the assignor, was filed in August 1938 and the patent was granted in March 1943.[43] (Figure 9)

In the late 1930s, research work was progressing in the utilization of the new fiberglass materials that had come out of Owen Glass Company in Illinois. Although the patent on fiberglass was held by the Owens-Corning Corporation, both firms entered into a working agreement that allowed Gustin-Bacon to develop additional uses for fiberglass. As a result, Gustin-Bacon improved their production methods and machinery. In addition, they developed a variety of uses for fiberglass, including insulation for the rail and auto industries; product lines for commercial and residential construction, including fiberglass based acoustical ceiling tiles; and as flexible insulation for heating and cooling systems.[44] (See figure 13)

---

[41] "Gustin-Bacon Manufacturing Company; Product Catalog 1928," p. 140-44. Photocopy, Missouri History Museum, St. Louis, Missouri, Skinker Boulevard, St. Louis.

[42] "Gustin-Bacon, Patent No. 1,692,766, " Google Patents, Online, Accessed July 2012. http://www.google.com/patents?hl=en&lr=&vid=USPAT1692766&id=Q5ROAAAAEBAJ&oi=fnd&dq=Patents+Kansas+City+Missouri+Gustin+Bacon+mfg.&printsec=abstract#v=onepage&q&f=false

[43] "Gustin-Bacon, Patent No. 2,312,993," Google Patents, Online, Accessed July 2012. http://www.google.com/patents/US2312993?pg=PA2&dq=gustin-bacon+manufacturing+rubber+hose&hl=en&sa=X&ei=nHhXUN6pFojq0gG44ICgAg&ved=0CDEQ6AEwAA#v=onepage&q=gustin-bacon%20manufacturing%20rubber%20hose&f=false

[44] Gustin-Bacon, "Your Kansas City at War," *The Kansas City Star* 6 May 1945. Microfilm, Special Collections, Kansas City Public Library, Kansas City, Missouri.

Over forty patented and trademarked products developed by Gustin-Bacon between the 1920s through the 1950s were located.[45] As new product lines developed, the firm's manufactured output continued to increase. Gustin-Bacon expanded beyond Kansas City, Missouri yet the heart of the firm remained firmly planted within the West Bottoms at 1412-18 W. 12th Street.

> The business increased until it employed some 500 persons and offices were opened in New York, Philadelphia, Chicago, San Francisco, Tulsa, Houston and Ft. Worth. It started the marketing of Fiberglass insulation in 1933, Rolagrip couplings in 1936 and Gruvagrip couplings in 1938. In peacetime, fiberglass insulation was used in railway refrigerator cars, passenger cars, tank cars, aircraft and in the oil industry and for many other purposes.[46] (See figure 12)

The need for additional manufacturing space became a priority when the United States began preparation to enter World War II. Gustin-Bacon Manufacturing Company was one of the first Kansas City businesses to enter war production. At the request of the government, the firm built a new manufacturing facility in 1942 specifically to handle war production. The new plant was built at 2920 Fairfax, Kansas City, Kansas, with $500,000 from G-B's reserves. This plant was built specifically for the fabrication of fiberglass insulation for use in ships for the Department of the Navy and Maritime Commission and for Army aircraft. Since this new plant was also a new process for the employees of Gustin-Bacon, an intensive training program was put into place.[47]

Although Gustin-Bacon's main contribution was in supplying "…glass insulation for air transports and bombers and for combat vessels of the Navy."[48] They also supplied their flexible 'G-B Gruvagrip.

> …couplings for portable pipe lines for gasoline that were laid on the surface of the ground with incredible speed [additionally, the 'G-B Rolagrip']…flexible pipe coupling, used on plain end pipe, saved days in the pipe assembling on Merchant Ships. This ingenious device that causes pressure to fight itself, a housing with small steel rollers and a synthetic rubber gasket . . . The Navy, likewise, uses this type on numerous of its offshore pipelines. Millions of these couplings have gone overseas."[49]

By 1943, ninety-five percent of its production was war goods related. In June 1943, Albert L. Gustin, president and CEO, received the Army and Navy E for excellence on behalf of his

---

45 Google Patent Search, "Gustin-Bacon Manufacturing Company," On-line, Accessed July 2012. www.google.com/**patents**
46 "Gustin, Albert Lyman" THE NATIONAL CYCLOPAEDIA OF AMERICAN BIOGRAPHY, Vol XXXII, NP: New York 1945, p. 374-375.
47 Ibid.
48 "Your Kansas City at War. the Story of Fiberglass Insulation," *The Kansas City Star* 6 May 1945. Microfilm, Missouri Valley Room, Kansas City Public Library, Kansas City Missouri.
49 Ibid

company for their dedication to wartime production. In August the same year, Mr. Gustin suffered a fatal heart attack, at which time Albert L. Gustin Jr. took his father's place.[50]

Perhaps the most important product line developed at Gustin-Bacon in Kansas City was fiberglass for a variety of applications. The most recognizable use of Gustin Bacon insulation was for the rail industry. As illustrated in the 1949 ad in *Railway Age* magazine their trademarked G-B Ultralite Insulation as used in the B&O Columbian passenger trains and installed by the Pullman Standard Company.[51] (Figure 10)

In 1951, the Missouri River once again flooded the West Bottoms. The floodwaters reached the top of the first floor windows of Gustin–Bacon's main office. While no articles have been found that offer information on actual damages to the building, several photographs have been located. Once the waters receded and the cleanup completed, the company continued their business operations. (Figure 11)

The 1412-1418 W. 12th Street location remained the site of the company's laboratory until 1961. The last patent developed by Gustin-Bacon while still located in the W. 12th Street building was assigned in December 1961.[52] Although G-B retained the building as warehouse space, their main office in addition to manufacturing was moved to their Fairfax, Kansas, facility.
It appears that by the 1961, Gustin-Bacon began moving more and more of their operations to their Fairfax plant. Patents, which continued to be issued under Gustin-Bacon as assignor, were issued to an address in Shawnee Mission, Kansas.

On July 1, 1966, Gustin-Bacon Manufacturing merged with Certain-teed Corporation, Valley Forge, Pennsylvania. Certain-teed, which began diversifying their holdings four years prior, acquired the Gustin-Bacon Manufacturing Company primarily for the G-B line of insulating materials. Gustin-Bacon remained a division of Certain-teed Corporation, a building supply company specializing in insulation for residential and commercial construction, for the next several years. In the 1970s, the hardware division of Gustin-Bacon was sold to the Aeroquip Corporation, a manufacturer for automotive, trucking and railway equipment. It appears that at this point the Gustin-Bacon name became obsolete.[53]

In 1965, the Albert Mary Building was occupied by Columbia Burlap Bag Company, a small manufacturer of bags used in food and commercial applications. Later, the building was

---

[50] Ibid.

[51] G-B Ultralite Insulation, Serial Number 71505104, Filed September 17, 1947; Trademark Registration Number 0500585, June 1, 1948. (United States Patent and Trademark Office, Trademark Electronic Search System (TESS) http://tess2.uspto.gov) Accessed, June 6, 2012.

[52] "Patent number: 3233992, Filing date: May 1, 1959, Issue date: Feb 8, 1966/ Kansas City Missouri, Gustin-Bacon Manufacturing Company," U. S. Patent Search, Online Google Scholar http://scholar.google.com/. A list of patent numbers as issued to Gustin-Bacon Manufacturing Company is attached in the appendix of this report.

[53] "75th Anniversary: Certain-teed 1904-1979," Anniversary Pamphlet, Certain-teed-Saint Gobain Corporation (CSG), p.15. A subsidiary of Saint-Gobain Insulation Corporation Industries of France.

occupied for a short time by a tire company and since then has continued to transition through various tenants. Currently, an antique retail business operates on the first floor of the building.

Albert Marty (1852–1916)

At the time of his death, Albert Marty was the head of a highly lucrative real estate investment firm that was well known to the Kansas City region. Ironically, very little was written about him considering his wealth, stature and philanthropic contributions to the community. He came to Kansas City in 1865 when his family relocated to the area from Monticello, Wisconsin. Marty's first employment was in the banking industry but he later joined the firm of Gates and Kendall, a wholesale boot and shoe business. By 1875, Marty was investing in Kansas City real estate. Most of his career was as a solo investor with the exception of 1884-1886 when he was in business with his younger brother, Augustine P. Marty, as Albert Marty & Brother. Marty was responsible for platting and developing numerous additions throughout Kansas City.[54]

The Marty family was well connected and highly influential in Kansas City during the late 19th century and early 20th century. In 1874, Albert married Nellie A. Gates, the daughter of his employer Jemuel C. Gates of Gates and Kendall. The couple had three sons, Arthur, Jemuel and Samuel who later joined their father in his real estate business under Marty and Marty Real Estate.[55] In addition, Albert Marty's sister married Robert Gillham, "the leading cable car engineer of Kansas City and designer of the 9th Street Incline and the 8th Street Tunnel, connecting Union Depot in the West Bottoms with Downtown."[56] Most likely this connection was instrumental to Marty's choices in property investments and development.

Marty's office was located in the Journal Building until 1887 when he commissioned the construction of a new office building on the corner of 9th and Grand Avenue, at a cost of approximately $200,000. The Rialto Building, as it was named, mostly of frame construction with brick exterior, stood five-stories tall. Albert Marty's real estate office was located on the fifth floor of the Rialto. Many well-known Kansas City doctors and dentists established their offices here as well.[57]

In 1909, the building suffered a gas explosion. It was estimated that as many as sixty doctors and twenty dentists lost their offices in the fire that engulfed the building after the explosion. The remaining exterior walls were razed and the new Rialto Building was constructed by Marty for $700,000 as designed by Kansas City architect, Charles A. Smith, between 1910 and 1911. The

---

54 Real Estate Advertisements, *The Kansas City Journal* 7 October 1883, p.11. Numerous real estate offerings advertised in the weekend editions of the newspaper between 1883 and 1887 were listed by Albert Marty indicating that he developed and sold both commercial and residential properties. While the exact property was never located in this manner, the information gathered from this source showed Marty to have been prolific in both categories for property management and development.

55 "Marty," *Gates Kansas City, Missouri, City Directory, 1917* (Kansas City, Gates Publishing Co., 1917), 1551.

56 "Gillham, Robert," Vertical file, Special Collections, Missouri Valley Room, Kansas City Public Library, Kansas City Missouri.

57 Vintage Kansas City, "Gas Completes Ruin of Rialto," *The* Kansas City Journal 24 December 1909. Online, accessed July 1, 2012. http://www.vintagekansascity.com/100yearsago/labels/Rialto%20building

Marty family retained ownership after Albert's death in 1916 and it was part of the will when Nellie Gates Marty passed away in August 1933.[58]

Architect of the Albert Marty Building

The identity of the architect has not been verified to date. However, through comparisons to the works of major architectural firms that were working on various buildings in Kansas City at the time that Albert Marty commissioned the design for this warehouse, two firms stand out as strong possibilities: the firm of Adriance Van Brunt and the firm of Van Brunt and Howe (no relation to Adriance Van Brunt).

A. Van Brunt and Company

Adriance Van Brunt, with his brother John, came to Kansas City in 1878 (no relation to Henry Van Brunt). Many of the impressive homes of wealthy Kansas City entrepreneurs like Edward Dickinson, J. W. Merrill and R. M. Goodlett designed by Van Brunt no longer remain. In addition, Van Brunt's firm designed commercial buildings, including the B. Adler and Company, Harvey Dutton Dry Goods. [59] The Water Works Building (c. 1880s) that once stood at 6th and Walnut as designed by Adriance Van Brunt has strong elements that are similar in feel to the Albert Marty Bldg. A later building, although not constructed until 1903, the Sewall Paint and Glass Co. Building, 1009-1013 West Eighth Street, Kansas City (NR 5/9/02), is an example of Van Brunt's work in the West Bottoms.[60]

Albert Marty would have known of Van Brunt's work through is brother- in-law, Robert Gillham who was the city engineer when Van Brunt was assigned to the Kansas City Parks Board. Adriance Van Brunt was commissioned to design the First Congregational Clyde Church, c. 1885, which was located near Seventh Street and Brooklyn Avenue. At this time, Albert Marty, his father Mathias Marty, as well as Albert's father-in-law, Jemuel Gates, all served as members of the Board Trustees for the Clyde Church.[61] Adriance had been an established architect in Kansas City for over a decade at the time of construction.

Van Brunt and Howe

The principals of the firm were Henry Van Brunt and Frank M. Howe. Originally located in Boston, Massachusetts, Van Brunt and Howe designed a number of buildings in Kansas City

---

[58] "Nellie Gates Marty," *The Kansas City Star* August 1933, Clippings, microfilm, Special Collections, Missouri Valley Room, Kansas City, Missouri Public Library.
[59] Cydney Millstein and Carol Grove, Houses of Missouri:1870-1940 (New York: Acanthus Press, 2008), 269.
[60] Cydney Millstein, The Sewall Paint and Glass Company Building, National Register of Historic Places, May 9, 2002.
[61]

prior to relocating their practice here in 1885. The firm had landed a good number of commissions from the Union Pacific and Missouri Pacific Railroad that included passenger depots in Nebraska, Utah and Wyoming. Van Brunt sent Frank Howe to oversee the commissions related to the railroad as well as their growing practice in Kansas City, Missouri.[62] Several buildings constructed prior to the Albert Marty Warehouse were designed by Van Brunt and Howe. As originally designed, the Emery Bird Thayer Building (built 1889-90, NR 1/10/1972, demolished) has a strong resemblance to the Albert Marty Building with its Romanesque style.

T.J. Conn, the brick contractor for the Albert Marty Building had several business connections with the architectural firm of Van Brunt and Howe. Three of the buildings for which Conn supplied the brickwork including Emery, Bird and Thayer (NR, 1/7/1972), the Kansas City Club (demolished) and the Union Pacific Railway Depot (Destroyed by fire in 1923) at Ogden, Utah, were designed by Van Brunt and Howe.

Local Kansas City area businesspersons, instrumental to the construction of this building, were identified in a souvenir book published in 1890 by the *Kansas City Times*:

- W. M. Prather was a well-known general contractor in Kansas City and was identified as "builder of Marty properties." He also built the Campbell Paint Supply building located at 1400 W. 12th Street, and the Kansas City Creamery Packing Building at 1406 W. 12th Street. It is highly possible that these buildings were also developed by Albert Marty. Mr. Prather was a member of the Builders' and Traders' Exchange beginning in business in Kansas City in 1880.[63]

- The brick contractor was T. J. Conn, who started his Kansas City business in 1880. He was also a member of the Builders' and Traders' Exchange, and among the building for which he furnished the brick work are the Bullene, Moore & Emery Building [also called Emery, Bird and Thayer], the Meyer Brothers drug warehouse, a Hebrew Synagogue, the Kansas City Club House (1880s).[64] His firm also provided the brickwork for the Union Pacific Railway Depot at Ogden, Utah, which was constructed between 1886 and 1889.

- David M. Quay, a Kansas City plumbing and steam heating contractor, started his business in 1884. In 1890, Kansas City considered his work to be excellent and provided for "…some of the most important and intricate work in this city."[65] In addition to 1412-1418 W. 12th Street, among the many samples listed were: the New York Life Building, the Campbell & Cutler Building located at 1408 W. 12th Street and constructed in 1884, and the first Rialto Building at 9th and Grand, which Albert Marty developed the same year as the Albert Marty Building on 12th Street. The range of Quay work contained both

---

62 Susan Jezack Ford, "Henry Van Brunt, Missouri Valley Special Collections: Biography," Missouri Valley Room, Kansas City Public Library.
63 "W. M. Prather," Kansas City: Its Resources And Their Development, A souvenir of the Kansas City Times, 1890, 44.
64 "T. J. Conn," Kansas City: Its Resources And Their Development, A souvenir of the Kansas City Times, 1890, 46
65 "David M. Quay," Kansas City: Its Resources And Their Development, A souvenir of the Kansas City Times, 1890, 46.

public and private buildings, including residential. Quay was also a member of the Builders' and Traders Exchange.[66]

CONCLUSION

The firm of Gustin-Bacon occupied several buildings within a three-block radius of the Albert Marty Building before firmly establishing what would become its national headquarters at 1412-1418 West 12th Street. This document illustrates the unique contributions that Gustin-Bacon made throughout their history. While the early stages of their business focused heavily on the railroad industry, Gustin-Bacon expanded their research and development to include products for a wide range of industries throughout the United States including those affiliated with oil, gas, automotive, chemicals, and fiberglass. Additional research led to advances in fiberglass as insulation for sound proofing, heat retention, vibration control and many other uses that developed by the firm between 1938 and 1961. Gustin-Bacon Manufacturing Company's most vital and productive years occurred at 1412-1418 West 12th Street, which they occupied from 1914 through 1964.

66 *Ibid.*

BIBLIOGRAPHY

"1414-1418 West 12th Street," *City of Kansas City, Missouri: City Directories*. Various Publishers and Years between 1883 and 1965. Missouri Valley Room, Kansas City Public Library, Kansas City, Missouri.

Betz, Melanie A. "Final Report: Central Industrial District Survey, Kansas City, Missouri 1988." Landmarks Commission, Kansas City Missouri.

Building Permit No. 82765, October 7, 1925, Landmarks Commission, Kansas City, MO.

"Conn, T. J." *Kansas City: Its Resources And Their Development, A souvenir of the Kansas City Times*, 1890,

Ford, Susan Jezack. "Henry Van Brunt, Missouri Valley Special Collections: Biography," Missouri Valley Room, Kansas City Public Library.

"Gillham, Robert," Vertical file, Special Collections, Missouri Valley Room, Kansas City Public Library, Kansas City Missouri.

"Gustin-Bacon Manufacturing Company, 1412-18 West 12th Street." *Kansas City Missouri City Directories.* Multiple years, Microfilm. Special Collections, Kansas City Public Library, Kansas City, Missouri.

"Gustin, Albert Lyman." *The National Cyclopaedia of American Biography, Vol. XXXII,* NP: New York 1945.

"G-B Ultralite: Trademark." Serial Number 71505104 Trademark Registration Number 0500585, June 1, 1948. United States Patent and Trademark Office. Trademark Electronic Search System (TESS). Online. Accessed August 2012. http://tess2.uspto.gov.

"Gustin-Bacon Manufacturing Co." *The Kansas City Star* 10 Jan. 1926. Microfilm, Missouri Valley Room, Kansas City Public Library, Kansas City Missouri.

Gustin-Bacon. Patent number: 3233992. Feb 8, 1966 Kansas City Missouri. U. S. Patent Search. Google Scholar. Online. Accessed August 2012. http://scholar.google.com/.

Gustin-Bacon, "Your Kansas City at War," *The Kansas City Star* 6 May 1945. Microfilm, Special Collections, Kansas City Public Library, Kansas City, Missouri.

Landmarks Commission, Kansas City, Missouri. *A Place In Time*. Kansas City: Landmarks Commission, 1977.

Marty, Albert. Advertisements "Real Estate," *The Kansas City Journal* Jan. 1883-Jan. 1889.

"Marty, Albert/Marty Family,1886-1930." Various news clippings. Microfilm. Special Collections. Kansas City Public Library.

"Marty, Albert." *Kansas City: Its Resources And Their Development, A souvenir of the Kansas City Times*, 1890.

"Marty, Albert." *Gates City Directory: Kansas City, Missouri, 1917.* Kansas City: Gates Publishing Co., 1917.

Millstein, Cydney and Carol Grove, *Houses of Missouri: 1870-1940.* New York: Acanthus Press, 2008.

Millstein, Cydney. "The Sewall Paint and Glass Company Building." National Register of Historic Places, May 9, 2002.

"Nellie Gates Marty," *The Kansas City Star* 19 August 1933.

"Prather, W. M." *Kansas City: Its Resources And Their Development, A souvenir of the Kansas City Times*, 1890.

"Quay, David M." *Kansas City: Its Resources And Their Development, A souvenir of the Kansas City Times*, 1890.

"Real Estate For Sale." *The Kansas City Journal* 7 October 1883.

"Rialto." *Kansas City: Its Resources And Their Development, A souvenir of the Kansas City Times*, 1890.

Schwenk, Sally. "Railroad Related Historic Commercial and Industrial Resources in Kansas City, Missouri." MPDF National Register of Historic Places Nomination. November 2000.

U.S. Patents. Searchable Database. Online. Accessed August 2012. http://tess2.uspto.gov.

Vintage Kansas City, "Gas Completes Ruin of Rialto," *The* Kansas City Journal 24 December 1909. Online, accessed July 1, 2012. http://www.vintagekansascity.com/100yearsago/labels/Rialto%20building

Water Permits, # 5924 14 September 1886. No. 5925 18 September 1886. Water Department. City of Kansas City, Missouri.

For further research, see also:

"Industry on Parade." Gustin Bacon. "Fast Growing Industrial Infant." Reel 85 (5/21/52). RN507.85. Motion Picture, Sound, and Video Records Section. Special Media Archives Services Division (NWCS-M). National Archives at College Park, 8601 Adelphi Road, College Park, MD, 20740-6001.

VERBAL BOUNDARY DESCRIPTION

Turner & Co's Addition Lots 23 thru 25, Block 52 & a strip 16' x 120' LY W & Adjacent Land and Improvements, Kansas City, Jackson County, Missouri.

BOUNDARY JUSTIFICATION

The nominated property includes the entire parcel historically associated with the Albert Marty Building, Kansas City, Jackson County, Missouri.

Geographical Data Maps: See pp. 23 & 24

Geographical Data Map:
Geographical Data map with decimal degree reference.
Marty, Albert, Building
Kansas City, Jackson County, Missouri
Railroad Related Historic Commercial and Industrial Resources in Kansas City, Missouri MPDF
Center point reference: Latitude: 39.101029 Longitude: -94.602173

Geographical Map 2: Map context

Key to Photographs

Richard Welnowski, photographer, July 2012.

1. Main or south façade; view looking northwest
2. Main or south façade; view looking north
3. Detail south façade; view looking north
4. West façade; view facing east
5. West and north facades; view facing northeast
6. North façade; view facing south
7. First floor interior; view facing north
8. First floor interior; view facing south
9. First floor interior, northwest corner; view facing northeast

Figure Log:

1. View facing northwest shows the row of buildings developed by Albert Marty between 1884 -1887 beginning with the Campbell Paint and Glass Company Building in the foreground at 1400 W. 12th Street with Gustin-Bacon to the left of center (flag flying over the building).
2. Albert Marty Building, with Gustin-Bacon Manufacturing Company signage.
3. Albert Marty Building, left half of image, with Gustin-Bacon Manufacturing Company signage.
4. Footprint of 1412-1418 West 12th Street, from 1896 (left) and 1939 (right).
5. Gustin-Bacon: Advertisement listing products handled by the company.
6. Artist Sketch: "Hay Row" prior to demolition in 1912 to make way for the construction of the new 12th Street Viaduct.
7. Gustin-Bacon Manufacturing Company: Main facility and ancillary buildings in use by G-B in 1939.
8. Fluid Pressure Horn.
9. Method of Lining Pipe: for use in transporting corrosive chemicals.
10. Advertisement for Gustin-Bacon *Ultralite Insulation.*
11. Gustin-Bacon Manufacturing Company seen in center background during Flood of 1951 in Kansas City, Missouri.
12. Advertisement c. 1955 for G-B patented products: Rolagrip, Gruvagrip and Gruvajoint.
13. Advertisement explaining the benefits of *G-B Snap-On Insulation* used for the heating and cooling system installed at the Hallmark Cards building in 1955, Kansas City, Missouri.

Missouri Valley Special Collections, Kansas City Public Library, Kansas City, Missouri

Figure 1
View facing northwest shows the row of buildings developed by Albert Marty between 1884 - 1887 beginning with the Campbell Paint and Glass Company Building in the foreground at 1400 W. 12th Street with Gustin-Bacon to the left of center (flag flying over the building).
Source: Missouri Valley Room, Special Collections, Kansas City Public Library.

Figure 2

Albert Marty Building, with Gustin-Bacon Manufacturing Company signage. Source: Kansas City, MO Tax Assessment Photography, c. 1940.

Figure 3

Albert Marty Building, left half of image, with Gustin-Bacon Manufacturing Company signage.
Source: Kansas City, MO Tax Assessment Photography, c. 1940.

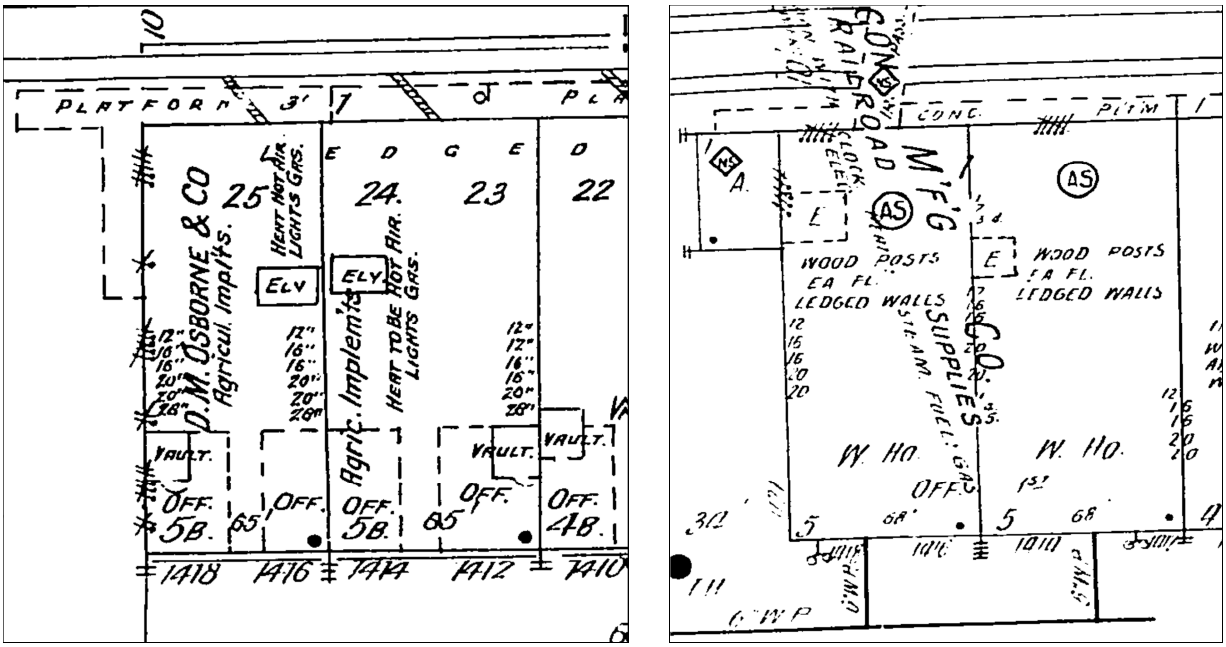

Figure 4

Gustin-Bacon Manufacturing Company:

Footprint of 1412-1418 West 12th Street, from 1896 (left) and 1939 (right), *City of Kansas City, Missouri, Sanborn Insurance Map, 1896 Vol. 1, Sheet 19 and 1939 Vol. 1A, Plate 179.* New York: Sanborn Map Company, 1896/1939.

Bell Phone 116 Hickory. Home Phone 26 Main.

Gustin-Bacon Mfg. Co.

Railway, Packing House & Mill Supplies

Leather Belting
Rubber Belting
Canvas Belting
Lace Leather
Belt Hooks
Wire Lace

Water Hose
Steam Hose
Air Hose
Fire Hose
Mill Hose
Garden Hose

Packings
Valves
Pure Gum
Rubber Matting
Graphite
Pulleys
Waste

Hose Coupling and Clamps

Let us tell you about our Anchor belt for severe usage and extreme wet places.

Black Cat Prepared Roofing
Cold Water Paint
Power, Transmission & Conveying Machinery

1108-10 West 11th Street. Kansas City, Mo.

Figure 5

Gustin-Bacon: Advertisement listing products handled by the company.
Kansas City, Missouri: Gates City Directory for 1905. Microfilm.
Missouri Valley Room, Kansas City Public Library, Kansas City, Missouri.

Figure 6

Artist Sketch:
"Hay Row" prior to demolition in 1912 to make way for the construction of the new 12th Street Viaduct.

The Kansas City Star
c. 1912

Microfilm, Missouri Valley Room, Kansas City Public Library, Kansas City, Missouri

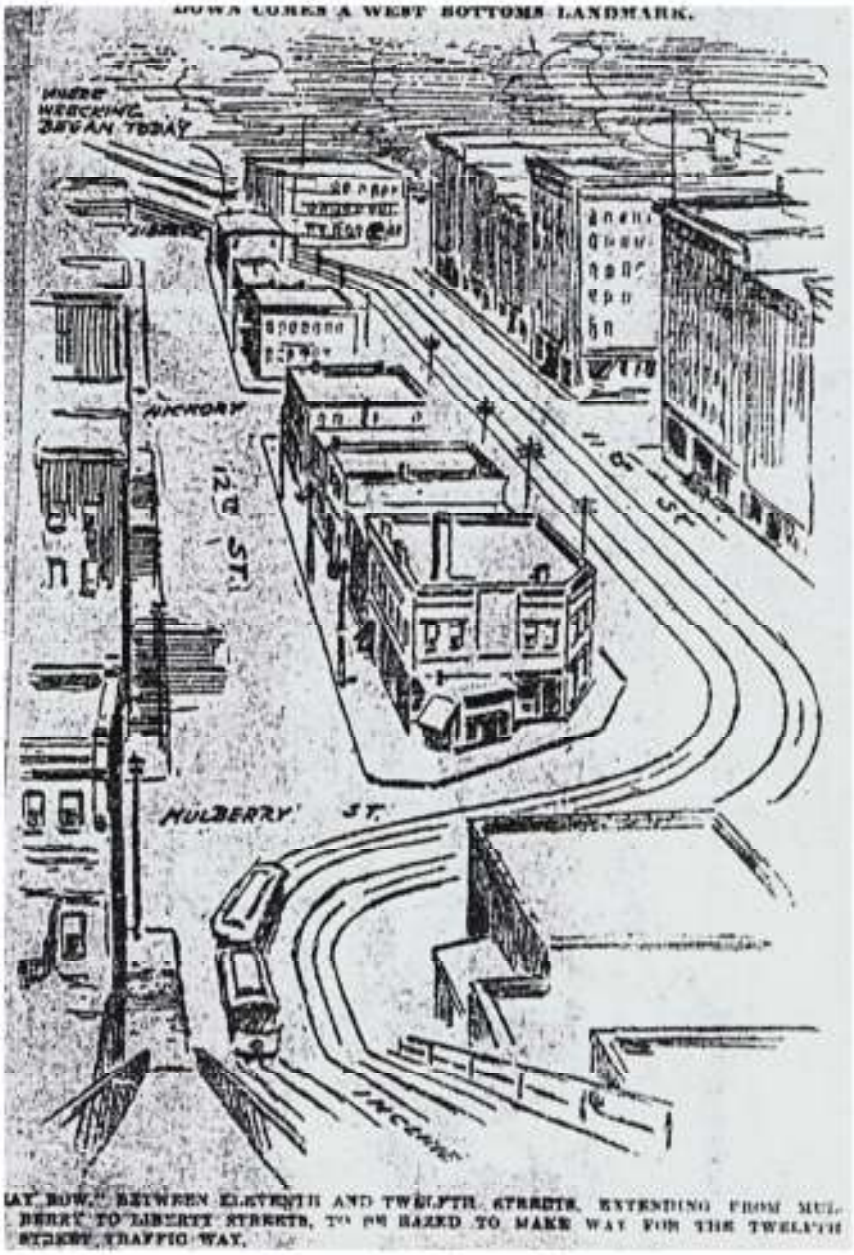

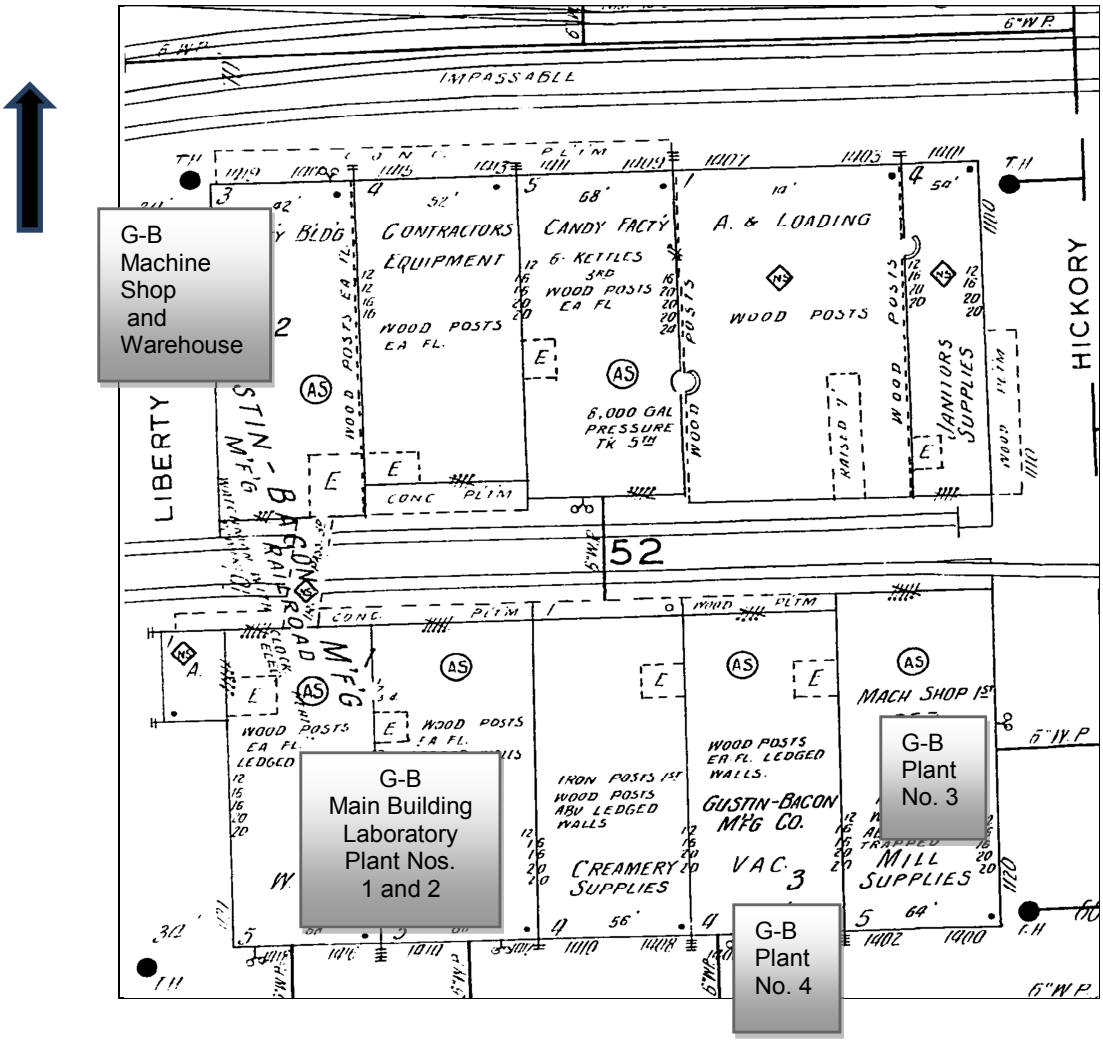

Figure 7

Gustin-Bacon Manufacturing Company: Main facility and ancillary buildings in use by G-B in 1939.

City of Kansas City, Missouri Sanborn Insurance Map, 1939 Vol. 1A Sheet 179. New York: Sanborn Map Company, 1939.

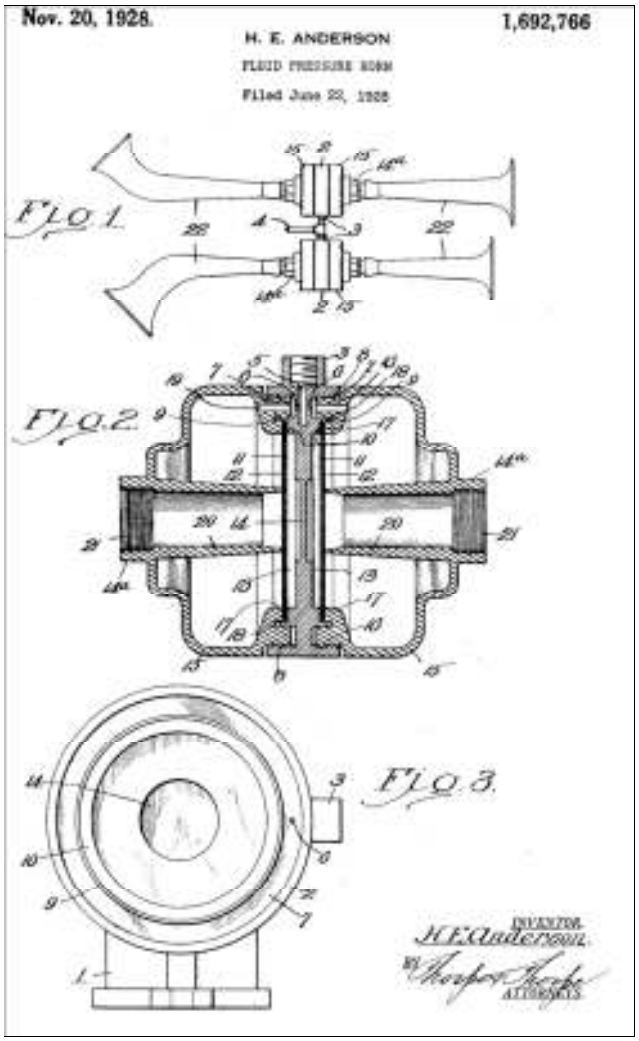

Figure 8

Fluid Pressure Horn
Patent No. 1,692,766

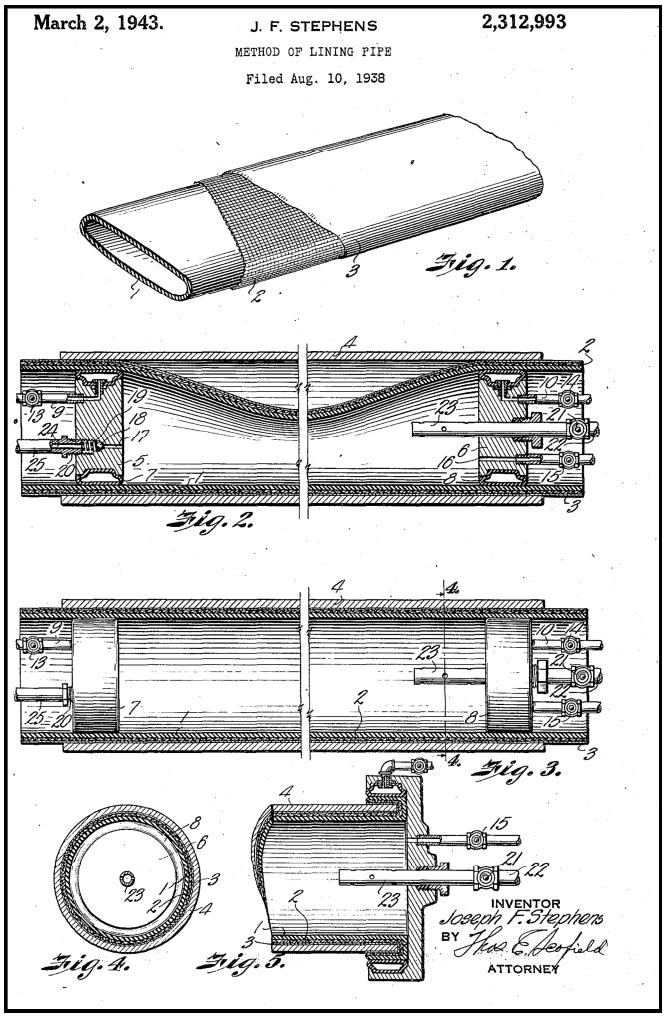

Figure 9

Patent No. 2,312,993

Method of Lining Pipe: for use in transporting corrosive chemicals

Figure 10

Advertisement for Gustin-Bacon *Ultralite Insulation*, *Railway Age*, c.1950s.

Figure 11

Gustin-Bacon Manufacturing Company seen in center background during Flood of 1951 in Kansas City, Missouri. View facing northeast

Source: Missouri Valley Room, Special Collections, Kansas City Public Library, Kansas City, Missouri.

Otis Appoints Robbins As Service Manager

Oilwell Names Five Field Men in Central Midwest

When It Comes to Coupling Pipe

It Pays to Know the Facts About

GUSTIN gb BACON

What's the Big Advantage in G-B Couplings?

G-B couplings eliminate flanging, threading, welding. No special tools or skill required to install them. Result: Tremendous savings in installation time.

How Else Do They Save Money?

All G-B couplings are reclaimable. Also, with G-B couplings, every joint is a union. Makes it easy, inexpensive to take a line apart.

How Much Abuse Can They Take?

Because they permit end pull up to 102,000 and misalignment up to 7%, G-B couplings absorb shock, vibration, ground motion, expansion, contraction, etc.

Are They Recommended for Permanent Installations?

Thousands and thousands of G-B couplings installed years ago on permanent lines, buried and exposed, are still giving completely satisfactory service.

What Kind of Lines Are They Used On?

Oil, water, chemicals, gases, air, processing fluids, abrasive materials. Permanent or temporary lines, surface or buried, vacuum, suction or discharge, vertical or horizontal

ROLAGRIP

GRUVAGRIP

GRUVAJOINT

FITTINGS

© Copyright 2007 VintageAdsAndBooks.COM

Get gb Couplings at your supply store

GUSTIN-BACON Manufacturing Company

210 W. Terry St. Kansas City, Missouri

.

Figure 12

Advertisement c. 1955 for G-B patented products: Rolagrip, Gruvagrip and Gruvajoint.

Image owned by Vintage Ads and Books: http://vintageadsandbooks.com/gustin-bacon-manufacturing-company-vintage-1955-pays-to-know-facts-ad-p430b.html?filter_name=Gustin-Bacon

Figure 13

Advertisement explaining the benefits of *G-B Snap-On Insulation* used for the heating and cooling system installed at the Hallmark Cards building in 1955, Kansas City, Missouri.

Gustin-Bacon Catalog, October 1955.

Miscellaneous Advertising Tools

STOP

ARTIST SPACE
913 284 6044
ONE WAY
Rail and Bone

COLUMBIA BURLAP BAG CO.
3E
3W

COLUMBIA BURLAP BAG CO.

PLANT No 1
TIRE
OUTLET
NOT HIRING
NO SOLICITING
NO TRESPASSING

ÉVITER LES CONTREFAÇONS
CAFÉ
MARTIN

AUTHORIZED USE ONLY
IN CASE OF FIRE USE STAIRWAY
DANGER! BEFORE WALKING ONTO ELEVATOR CHECK THAT IT IS THERE
WORLD WIDE LONG DISTANCE MOVING SERVICE
LARGE
GRANDE