STATE OF MISSOURI

DEPARTMENT OF NATURAL RESOURCES

MISSOURI CLEAN WATER COMMISSION

MISSOURI STATE OPERATING PERMIT

In compliance with the Missouri Clean Water Law, (Chapter 644 R.S. Mo. as amended, hereinafter, the Law), and the Federal Water Pollution Control Act (Public Law 92-500, 92nd Congress) as amended,

Permit No.	MO-0128856
Owner:	Clover Hill Estates Homeowners Association
Address:	P.O. Box 513, Jackson, MO, 63755
Continuing Authority:	Same as above
Address:	Same as above
Facility Name:	Clover Hill Estates
Facility Address:	County Road 302, Jackson, MO, 63755
Legal Description:	Landgrant 232, Cape Girardeau County
UTM Coordinates:	X= 797998, Y=4145022
Receiving Stream:	Unnamed Tributary to Goose Creek (U)
First Classified Stream and ID:	Goose Creek (C) (2201)
USGS Basin & Sub-watershed No.:	(07140107-0602)

is authorized to discharge from the facility described herein, in accordance with the effluent limitations and monitoring requirements as set forth herein:

FACILITY DESCRIPTION

Outfall #001 – NON-POTW – Civic, Social, and Fraternal Associations – SIC #8641
Septic tank / recirculating sand filter / chlorination / dechlorination / sludge disposal by contract hauler.
Design population equivalent is 377.
Design flow is 28,860 gallons per day.
Actual flow is 18,763 gallons per day.
Design sludge production is 2.64 dry tons/year.

This permit authorizes only wastewater discharges under the Missouri Clean Water Law and the National Pollutant Discharge Elimination System; it does not apply to other regulated areas. This permit may be appealed in accordance with Section 621.250 RSMo, Section 640.013 RSMo and Section 644.051.6 of the Law.

April 1, 2014
Effective Date

Sara Parker Pauley, Director, Department of Natural Resources

December 31, 2017
Expiration Date

John Madras, Director, Water Protection Program

OUTFALL #001	TABLE A-1 INTERIM EFFLUENT LIMITATIONS AND MONITORING REQUIREMENTS	PAGE NUMBER 2 of 6 PERMIT NUMBER MO-0128856

The permittee is authorized to discharge from outfall(s) with serial number(s) as specified in the application for this permit. The interim effluent limitations shall become effective on **April 1, 2014,** and remain in effect through **March 31, 2017**. Such discharges shall be controlled, limited and monitored by the permittee as specified below:

EFFLUENT PARAMETER(S)	UNITS	INTERIM EFFLUENT LIMITATIONS			MONITORING REQUIREMENTS	
		DAILY MAXIMUM	WEEKLY AVERAGE	MONTHLY AVERAGE	MEASUREMENT FREQUENCY	SAMPLE TYPE
Flow	MGD	*		*	once/quarter***	24 hr. estimate
Biochemical Oxygen Demand$_5$	mg/L		45	30	once/quarter***	grab
Total Suspended Solids	mg/L		45	30	once/quarter***	grab
E. coli (Note 1, Page 3)	#/100 ml	1,134		1,134	once/quarter***	grab
pH – Units	SU	**		**	once/quarter***	grab
Ammonia as N	mg/L	*		*	once/quarter***	grab
Total Residual Chlorine (Note 2, Page 3)	µg/L	17 (130ML)		8 (130ML)	once/quarter***	grab

MONITORING REPORTS SHALL BE SUBMITTED QUARTERLY; THE FIRST REPORT IS DUE JULY 28, 2014. THERE SHALL BE NO DISCHARGE OF FLOATING SOLIDS OR VISIBLE FOAM IN OTHER THAN TRACE AMOUNTS.

EFFLUENT PARAMETER(S)	UNITS	DAILY MINIMUM	WEEKLY AVERAGE MINIMUM	MONTHLY AVERAGE MINIMUM	MEASUREMENT FREQUENCY	SAMPLE TYPE
Dissolved Oxygen	mg/L	*		*	once/quarter***	grab

MONITORING REPORTS SHALL BE SUBMITTED QUARTERLY; THE FIRST REPORT IS DUE JULY 28, 2014.

* Monitoring requirement only.
** pH is measured in pH units and is not to be averaged. The pH is limited to the range of 6.5-9.0 pH units.
*** See table below for quarterly sampling.

Minimum Sampling Requirements				
Quarter	**Months**	**E. coli, Total Residual Chlorine (TRC), and Dissolved Oxygen**	**All Other Parameters**	**Report is Due**
First	January, February, March	Not required to sample.	Sample at least once during any month of the quarter	April 28th
Second	April, May, June	Sample at least once during any month of the quarter	Sample at least once during any month of the quarter	July 28th
Third	July, August, September	Sample at least once during any month of the quarter	Sample at least once during any month of the quarter	October 28th
Fourth	October, November, December	Sample once during October; no sample required in either November or December	Sample at least once during any month of the quarter	January 28th

OUTFALL #001	TABLE A-2 FINAL EFFLUENT LIMITATIONS AND MONITORING REQUIREMENTS	PAGE NUMBER 3 of 6 PERMIT NUMBER MO-0128856

The permittee is authorized to discharge from outfall(s) with serial number(s) as specified in the application for this permit. The final effluent limitations shall become effective on **April 1, 2017** and remain in effect until expiration of the permit. Such discharges shall be controlled, limited and monitored by the permittee as specified below:

EFFLUENT PARAMETER(S)	UNITS	FINAL EFFLUENT LIMITATIONS			MONITORING REQUIREMENTS	
		DAILY MAXIMUM	WEEKLY AVERAGE	MONTHLY AVERAGE	MEASUREMENT FREQUENCY	SAMPLE TYPE
Flow	MGD	*		*	once/quarter***	24 hr. estimate
Biochemical Oxygen Demand$_5$	mg/L		45	30	once/quarter***	grab
Total Suspended Solids	mg/L		45	30	once/quarter***	grab
E. coli (Note 1, Page 3)	#/100 ml	1,134		1,134	once/quarter***	grab
pH – Units	SU	**		**	once/quarter***	grab
Ammonia as N (April 1 – Sept 30) (Oct 1 – March 31)	mg/L	5.5 7.5		1.3 2.9	once/quarter***	grab
Total Residual Chlorine (Note 2, Page 3)	µg/L	17 (130ML)		8 (130ML)	once/quarter***	grab

MONITORING REPORTS SHALL BE SUBMITTED QUARTERLY; THE FIRST REPORT IS DUE JULY 28, 2017. THERE SHALL BE NO DISCHARGE OF FLOATING SOLIDS OR VISIBLE FOAM IN OTHER THAN TRACE AMOUNTS.

EFFLUENT PARAMETER(S)	UNITS	DAILY MINIMUM	WEEKLY AVERAGE MINIMUM	MONTHLY AVERAGE MINIMUM	MEASUREMENT FREQUENCY	SAMPLE TYPE
Dissolved Oxygen	mg/L	*		*	once/quarter***	grab

MONITORING REPORTS SHALL BE SUBMITTED QUARTERLY; THE FIRST REPORT IS DUE JULY 28, 2017.

* Monitoring requirement only.
** pH is measured in pH units and is not to be averaged. The pH is limited to the range of 6.5-9.0 pH units.
*** See table below for quarterly sampling

Minimum Sampling Requirements				
Quarter	**Months**	**E. coli, Total Residual Chlorine (TRC), and Dissolved Oxygen**	**All Other Parameters**	**Report is Due**
First	January, February, March	Not required to sample.	Sample at least once during any month of the quarter	April 28th
Second	April, May, June	Sample at least once during any month of the quarter	Sample at least once during any month of the quarter	July 28th
Third	July, August, September	Sample at least once during any month of the quarter	Sample at least once during any month of the quarter	October 28th
Fourth	October, November, December	Sample once during October; no sample required in either November or December	Sample at least once during any month of the quarter	January 28th

Note 1 - Effluent limitations and monitoring requirements for *E. coli* are applicable only during the recreational season from April 1 through October 31. The Monthly Average Limit for *E. coli* is expressed as a geometric mean.

Note 2 - This permit contains a Total Residual Chlorine (TRC) limit.

(a) This effluent limit is below the minimum quantification level (ML) of the most common and practical EPA approved CLTRC methods. The Department has determined the current acceptable ML for total residual chlorine to be 130 µg/L when using the DPD Colorimetric Method #4500 – CL G. from Standard Methods for the Examination of Waters and Wastewater. The permittee will conduct analyses in accordance with this method, or equivalent, and report actual analytical values. Measured values greater than or equal to the minimum quantification level of 130 µg/L will be considered violations of the permit and values less than the minimum quantification level of 130 µg/L will be considered to be in compliance with the permit limitation. The minimum quantification level does not authorize the discharge of chlorine in excess of the effluent limits stated in the permit.

(b) Disinfection is required during the recreational season from April 1 through October 31. Do not chlorinate during the non-recreational months.

(c) Do not chemically de-chlorinate **if it is not needed to meet the limits in your permit.**

(d) If no chlorine was used in a given sampling period, an actual analysis is not necessary. Simply report as "0 µg/L" TRC.

B. STANDARD CONDITIONS

In addition to specified conditions stated herein, this permit is subject to the attached Parts I & III standard conditions dated November 1, 2013 and August 15, 1994, and hereby incorporated as though fully set forth herein.

C. SPECIAL CONDITIONS

1. This permit establishes final ammonia limitations based on Missouri's current Water Quality Standard. On August 22, 2013, the U.S. Environmental Protection Agency (EPA) published a notice in the Federal Register announcing of the final national recommended ambient water quality criteria for protection of aquatic life from the effects of ammonia in freshwater. The EPA's guidance, Final Aquatic Life Ambient Water Quality Criteria for Ammonia – Fresh Water 2013, is not a rule, nor automatically part of a state's water quality standards. States must adopt new ammonia criteria consistent with EPA's published ammonia criteria into their water quality standards that protect the designated uses of the water bodies. The Department of Natural Resources intends to adopt the new ammonia criteria during the next water quality standards triennial review. Also, refer to Section VI of this permit's factsheet for further information including estimated future effluent limits for this facility. It is recommended the permittee view the Department's 2013 EPA criteria Factsheet located at http://dnr.mo.gov/pubs/pub2481.htm .

2. This permit may be reopened and modified, or alternatively revoked and reissued, to:
   (a) Comply with any applicable effluent standard or limitation issued or approved under Sections 301(b)(2)(C) and (D), 304(b)(2), and 307(a) (2) of the Clean Water Act, if the effluent standard or limitation so issued or approved:
      (1) contains different conditions or is otherwise more stringent than any effluent limitation in the permit; or
      (2) controls any pollutant not limited in the permit.
   (b) Incorporate new or modified effluent limitations or other conditions, if the result of a waste load allocation study, toxicity test or other information indicates changes are necessary to assure compliance with Missouri's Water Quality Standards.
   (c) Incorporate new or modified effluent limitations or other conditions if, as the result of a watershed analysis, a Total Maximum Daily Load (TMDL) limitation is developed for the receiving waters which are currently included in Missouri's list of waters of the state not fully achieving the state's water quality standards, also called the 303(d) list.
   (d) Incorporate the requirement to develop a pretreatment program pursuant to 40 CFR 403.8(a) when the Director of the Water Protection Program determines that a pretreatment program is necessary due to any new introduction of pollutants into the Publically Owned Treatment Works or any substantial change in the volume or character of pollutants being introduced.

   The permit as modified or reissued under this paragraph shall also contain any other requirements of the Clean Water Act then applicable.

3. All outfalls must be clearly marked in the field.

4. Permittee will cease discharge by connection to a facility with an area-wide management plan per 10 CSR 20-6.010(3)(B) within 90 days of notice of its availability.

C. SPECIAL CONDITIONS (continued)

5. Water Quality Standards
   (a) To the extent required by law, discharges to waters of the state shall not cause a violation of water quality standards rule under 10 CSR 20-7.031, including both specific and general criteria.
   (b) General Criteria. The following general water quality criteria shall be applicable to all waters of the state at all times including mixing zones. No water contaminant, by itself or in combination with other substances, shall prevent the waters of the state from meeting the following conditions:
      (1) Waters shall be free from substances in sufficient amounts to cause the formation of putrescent, unsightly or harmful bottom deposits or prevent full maintenance of beneficial uses;
      (2) Waters shall be free from oil, scum and floating debris in sufficient amounts to be unsightly or prevent full maintenance of beneficial uses;
      (3) Waters shall be free from substances in sufficient amounts to cause unsightly color or turbidity, offensive odor or prevent full maintenance of beneficial uses;
      (4) Waters shall be free from substances or conditions in sufficient amounts to result in toxicity to human, animal or aquatic life;
      (5) There shall be no significant human health hazard from incidental contact with the water;
      (6) There shall be no acute toxicity to livestock or wildlife watering;
      (7) Waters shall be free from physical, chemical or hydrologic changes that would impair the natural biological community;
      (8) Waters shall be free from used tires, car bodies, appliances, demolition debris, used vehicles or equipment and solid waste as defined in Missouri's Solid Waste Law, section 260.200, RSMo, except as the use of such materials is specifically permitted pursuant to section 260.200-260.247.

6. Changes in Discharges of Toxic Substances

   The permittee shall notify the Director as soon as it knows or has reason to believe:
   (a) That any activity has occurred or will occur which would result in the discharge of any toxic pollutant which is not limited in the permit, if that discharge will exceed the highest of the following "notification levels:"
      (1) One hundred micrograms per liter (100 µg/L);
      (2) Two hundred micrograms per liter (200 µg/L) for acrolein and acrylonitrile; five hundred micrograms per liter (500 µg/L) for 2,5 dinitrophenol and for 2-methyl-4, 6-dinitrophenol; and one milligram per liter (1 mg/L) for antimony;
      (3) Five (5) times the maximum concentration value reported for the pollutant in the permit application;
      (4) The level established by the Director in accordance with 40 CFR 122.44(f).
   (b) That they have begun or expect to begin to use or manufacture as an intermediate or final product or byproduct any toxic pollutant, which was not reported in the permit application.

7. Report as no-discharge when a discharge does not occur during the report period.

8. It is a violation of the Missouri Clean Water Law to fail to pay fees associated with this permit (644.055 RSMo).

9. The permittee shall comply with any applicable requirements listed in 10 CSR 20-9, unless the facility has received written notification that the Department has approved a modification to the requirements. The monitoring frequencies contained in this permit shall not be construed by the permittee as a modification of the monitoring frequencies listed in 10 CSR 20-9. If a modification of the monitoring frequencies listed in 10 CSR 20-9 is needed, the permittee shall submit a written request to the Department for review and, if deemed necessary, approval.

10. Bypasses are not authorized at this facility and are subject to 40 CFR 122.41(m). If a bypass occurs, the permittee shall report in accordance to 40 CFR 122.41(m)(3)(i), and with Standard Condition Part I, Section B, subsection 2.b. Bypasses are to be reported to the Southeast Regional Office.

11. The facility must be sufficiently secured to restrict entry by children, livestock and unauthorized persons as well as to protect the facility from vandalism.

12. At least one gate must be provided to access the wastewater treatment facility and provide for maintenance and mowing. The gate shall remain locked except when opened by the permittee to perform operational monitoring, sampling, maintenance, mowing, or for inspections by the Department.

C. SPECIAL CONDITIONS (continued)

13. At least one (1) warning sign shall be placed on each side of the facility enclosure in such positions as to be clearly visible from all directions of approach. There shall also be one (1) sign placed for every five hundred feet (500') (150 m) of the perimeter fence. A sign shall also be placed on each gate. Minimum wording shall be SEWAGE TREATMENT FACILITY—KEEP OUT. Signs shall be made of durable materials with characters at least two inches (2") high and shall be securely fastened to the fence, equipment or other suitable locations.

14. An Operation and Maintenance (O & M) manual shall be maintained by the permittee and made available to the operator. The O & M manual shall include key operating procedures and a brief summary of the operation of the facility.

15. An all-weather access road shall be provided to the treatment facility.

16. The discharge from the wastewater treatment facility shall be conveyed to the receiving stream via a closed pipe or a paved or rip-rapped open channel. Sheet or meandering drainage is not acceptable. The outfall sewer shall be protected against the effects of floodwater, ice or other hazards as to reasonably insure its structural stability and freedom from stoppage. The outfall shall be maintained so that a sample of the effluent can be obtained at a point after the final treatment process and before the discharge mixes with the receiving waters.

17. The media in the filter beds shall be properly maintained to prevent surface pooling, vegetative growth, and accumulation of leaf litter.

D. SCHEDULE OF COMPLIANCE

The facility shall attain compliance with final effluent limitations for ammonia as soon as reasonably achievable or no later than **3 years** of the effective date of this permit.

1. Within six months of the effective date of this permit, the permittee shall report progress made in attaining compliance with the final effluent limits.

2. The permittee shall submit interim progress reports detailing progress made in attaining compliance with the final effluent limits every 12 months from issuance date.

3. Within **3 years** of the effective date of this permit, the permittee shall attain compliance with the final effluent limits, for ammonia.

Please submit progress reports to the Missouri Department of Natural Resources, Southeast Regional Office, 2155 North Westwood Blvd., Poplar Bluff, Missouri, 63901.

MISSOURI DEPARTMENT OF NATURAL RESOURCES
FACT SHEET
FOR THE PURPOSE OF RENEWAL
OF
MO-0128856
CLOVER HILL ESTATES

The Federal Water Pollution Control Act ("Clean Water Act" Section 402 Public Law 92-500 as amended) established the National Pollution Discharge Elimination System (NPDES) permit program. This program regulates the discharge of pollutants from point sources into the waters of the United States, and the release of storm water from certain point sources. All such discharges are unlawful without a permit (Section 301 of the "Clean Water Act"). After a permit is obtained, a discharge not in compliance with all permit terms and conditions is unlawful. Missouri State Operating Permits (MSOPs) are issued by the Director of the Missouri Department of Natural Resources (Department) under an approved program, operating in accordance with federal and state laws (Federal "Clean Water Act" and "Missouri Clean Water Law" Section 644 as amended). MSOPs are issued for a period of five (5) years unless otherwise specified.

As per [40 CFR Part 124.8(a)] and [10 CSR 20-6.020(1)2.] a Factsheet shall be prepared to give pertinent information regarding the applicable regulations, rationale for the development of effluent limitations and conditions, and the public participation process for the Missouri State Operating Permit (operating permit) listed below.

A Factsheet is not an enforceable part of an operating permit.

This Factsheet is for a Minor ☒.

Part I – Facility Information

Facility Type: NON-POTW – Civic, Social, and Fraternal Associations – SIC #8641

Facility Description:
Septic tank / recirculating sand filter / chlorination / dechlorination / sludge disposal by contract hauler.

Have any changes occurred at this facility or in the receiving water body that effects effluent limit derivation?
☒ Yes; (please provide simple description or reference appropriate location in the Fact Sheet.)

Application Date: 11/06/13
Expiration Date: 12/30/13

OUTFALL(S) TABLE:

OUTFALL	DESIGN FLOW (CFS)	TREATMENT LEVEL	EFFLUENT TYPE
#001	0.045	Secondary	Domestic

Facility Performance History:
This facility was last inspected on February 2, 2012. At the time of the inspection, the WWTF appeared to be well operated and maintained as conditions were found to be satisfactory.

Part II – Operator Certification Requirements

☒ Not Applicable; This facility is not required to have a certified operator.

Part III– Operational Monitoring

☒ Not Applicable; As per [10 CSR 20-9.010(4))], the facility is not required to conduct operational monitoring.

Part IV – Receiving Stream Information

10 CSR 20-7.031 Missouri Water Quality Standards, the Department defines the Clean Water Commission water quality objectives in terms of "water uses to be maintained and the criteria to protect those uses." The receiving stream and/or 1st classified receiving stream's beneficial water uses to be maintained, are located in the Receiving Stream Table located below in accordance with [10 CSR 20-7.031(3)].

RECEIVING STREAM(S) TABLE: OUTFALL #001

WATER-BODY NAME	CLASS	WBID	DESIGNATED USES*	12-DIGIT HUC	DISTANCE TO CLASSIFIED SEGMENT (MI)
Unnamed Tributary to Goose Creek	U	----	General Criteria	07140107-0602	1.6
Goose Creek	C	2201	AQL, LWW, SCR		

* - Irrigation (IRR), Livestock & Wildlife Watering (LWW), Protection of Warm Water Aquatic Life and Human Health-Fish Consumption (AQL), Cool Water Fishery(CLF), Cold Water Fishery (CDF), Whole Body Contact Recreation (WBC), Secondary Contact Recreation (SCR), Drinking Water Supply (DWS), Industrial (IND), Groundwater (GRW).

RECEIVING STREAM(S) LOW-FLOW VALUES:

RECEIVING STREAM (U, C, P)	LOW-FLOW VALUES (CFS)		
	1Q10	7Q10	30Q10
Unnamed Tributary to Goose Creek (U)	0	0	0

MIXING CONSIDERATIONS
Mixing Zone: Not Allowed [10 CSR 20-7.031(4)(A)4.B.(I)(a)].
Zone of Initial Dilution: Not Allowed [10 CSR 20-7.031(4)(A)4.B.(I)(b)].

Part V – Rationale and Derivation of Effluent Limitations & Permit Conditions

ALTERNATIVE EVALUATIONS FOR NEW FACILITIES:
As per [10 CSR 20-7.015(4)(A)], discharges to losing streams shall be permitted only after other alternatives including land application, discharges to a gaining stream and connection to a regional wastewater treatment facility have been evaluated and determined to be unacceptable for environmental and/or economic reasons.

☒ Not Applicable; The facility does not discharge to a Losing Stream as defined by [10 CSR 20-2.010(36)] & [10 CSR 20-7.031(1)(N)], or is an existing facility.

ANTI-BACKSLIDING:
A provision in the Federal Regulations [CWA §303(d)(4); CWA §402(c); 40 CFR Part 122.44(I)] that requires a reissued permit to be as stringent as the previous permit with some exceptions.

☒ All limits in this operating permit are at least as protective as those previously established; therefore, backsliding does not apply.

ANTIDEGRADATION:
In accordance with Missouri's Water Quality Standard [10 CSR 20-7.031(2)], the Department is to document by means of Antidegradation Review that the use of a water body's available assimilative capacity is justified. Degradation is justified by documenting the socio-economic importance of a discharging activity after determining the necessity of the discharge.

☒ No degradation proposed and no further review necessary. Facility did not apply for authorization to increase pollutant loading or to add additional pollutants to their discharge.

AREA-WIDE WASTE TREATMENT MANAGEMENT & CONTINUING AUTHORITY:
As per [10 CSR 20-6.010(3)(B)], …An applicant may utilize a lower preference continuing authority by submitting, as part of the application, a statement waiving preferential status from each existing higher preference authority, providing the waiver does not conflict with any area-wide management plan approved under section 208 of the Federal Clean Water Act or any other regional sewage service and treatment plan approved for higher preference authority by the Department.

BIOSOLIDS & SEWAGE SLUDGE:
Biosolids are solid materials resulting from domestic wastewater treatment that meet federal and state criteria for beneficial uses (i.e. fertilizer). Sewage sludge is solids, semi-solids, or liquid residue generated during the treatment of domestic sewage in a treatment works; including but not limited to, domestic septage; scum or solids removed in primary, secondary, or advanced wastewater treatment process; and a material derived from sewage sludge. Sewage sludge does not include ash generated during the firing of sewage sludge in a sewage sludge incinerator or grit and screening generated during preliminary treatment of domestic sewage in a treatment works. Additional information regarding biosolids and sludge is located at the following web address: http://dnr.mo.gov/env/wpp/pub/index.html, items WQ422 through WQ449.

☒ Permittee is not authorized to land apply biosolids. Sludge/biosolids are removed by contract hauler.

COMPLIANCE AND ENFORCEMENT:
Enforcement is the action taken by the Water Protection Program (WPP) to bring an entity into compliance with the Missouri Clean Water Law, its implementing regulations, and/or any terms and conditions of an operating permit. The primary purpose of the enforcement activity in the WPP is to resolve violations and return the entity to compliance.

☒ Not Applicable; The permittee/facility is not currently under Water Protection Program enforcement action.

PRETREATMENT PROGRAM:
The reduction of the amount of pollutants, the elimination of pollutants, or the alteration of the nature of pollutant properties in wastewater prior to or in lieu of discharging or otherwise introducing such pollutants into a Publicly Owned Treatment Works [40 CFR Part 403.3(q)].

☒ Not Applicable; The permittee, at this time, is not required to have a Pretreatment Program or does not have an approved pretreatment program.

REASONABLE POTENTIAL ANALYSIS (RPA):
Federal regulation [40 CFR Part 122.44(d)(1)(i)] requires effluent limitations for all pollutants that are or may be discharged at a level that will cause or have the reasonable potential to cause or contribute to an in-stream excursion above narrative or numeric water quality standard.

In accordance with [40 CFR Part 122.44(d)(iii)] if the permit writer determines that any given pollutant has the reasonable potential to cause, or contribute to an in-stream excursion above the WQS, the permit must contain effluent limits for that pollutant.

☒ Applicable; A RPA was conducted on appropriate parameters. Please see **APPENDIX – RPA RESULTS.**

REMOVAL EFFICIENCY:
Removal efficiency is a method by which the Federal Regulations define Secondary Treatment and Equivalent to Secondary Treatment, which applies to Biochemical Oxygen Demand 5-day (BOD_5) and Total Suspended Solids (TSS) for Publicly Owned Treatment Works (POTWs)/municipals.

☒ Not Applicable; Influent monitoring is not being required to determine percent removal.

SANITARY SEWER OVERFLOWS (SSO) AND INFLOW AND INFILTRATION (I&I):
Sanitary Sewer Overflows (SSOs) are defined as untreated sewage releases and are considered bypassing under state regulation [10 CSR 20-2.010(11)] and should not be confused with the federal definition of bypass. SSOs result from a variety of causes including blockages, line breaks, and sewer defects that can either allow wastewater to backup within the collection system during dry weather conditions or allow excess stormwater and groundwater to enter and overload the collection system during wet weather conditions. SSOs can also result from lapses in sewer system operation and maintenance, inadequate sewer design and construction, power failures, and vandalism. SSOs include overflows out of manholes, cleanouts, broken pipes, and other into waters of the state and onto city streets, sidewalks, and other terrestrial locations.

Inflow and Infiltration (I&I) is defined as unwanted intrusion of stormwater or groundwater into a collection system. This can occur from points of direct connection such as sump pumps, roof drain downspouts, foundation drains, and storm drain cross-connections or through cracks, holes, joint failures, faulty line connections, damaged manholes, and other openings in the collection system itself. I&I results from a variety of causes including line breaks, improperly sealed connections, cracks caused by soil erosion/settling, penetration of vegetative roots, and other sewer defects. In addition, excess stormwater and groundwater entering the collection system from line breaks and sewer defects have the potential to negatively impact the treatment facility.

Missouri RSMo §644.026.1 mandates that the Department require proper maintenance and operation of treatment facilities and sewer systems and proper disposal of residual waste from all such facilities.

At this time, the Department recommends the US EPA's Guide for Evaluating Capacity, Management, Operation and Maintenance (CMOM) Programs At Sanitary Sewer Collection Systems (Document # EPA 305-B-05-002). The CMOM identifies some of the criteria used by the EPA to evaluate a collection system's management, operation, and maintenance and was intended for use by the EPA, state, regulated community, and/or third party entities. The CMOM is applicable to small, medium, and large systems; both public and privately owned; and both regional and satellite collection systems. The CMOM does not substitute for the Clean Water Act, the Missouri Clean Water Law, and both federal and state regulations, as it is not a regulation.

☒ Not Applicable; This facility is not required to develop or implement a program for maintenance and repair of the collection system; however, it is a violation of Missouri State Environmental Laws and Regulations to allow untreated wastewater to discharge to waters of the state.

SCHEDULE OF COMPLIANCE (SOC):
Per 644.051.4 RSMo, a permit may be issued with a Schedule of Compliance (SOC) to provide time for a facility to come into compliance with new state or federal effluent regulations, water quality standards, or other requirements. Such a schedule is not allowed if the facility is already in compliance with the new requirement, or if prohibited by other statute or regulation. A SOC includes an enforceable sequence of interim requirements (actions, operations, or milestone events) leading to compliance with the Missouri Clean Water Law, its implementing regulations, and/or the terms and conditions of an operating permit. *See also* Section 502(17) of the Clean Water Act, and 40 CFR §122.2. For new effluent limitations, the permit includes interim monitoring for the specific parameter to demonstrate the facility is not already in compliance with the new requirement. Per 40 CFR § 122.47(a)(1) and 10 CSR 20-7.031(10), compliance must occur as soon as possible. If the permit provides a schedule for meeting new water quality based effluent limits, a SOC must include an enforceable, final effluent limitation in the permit even if the SOC extends beyond the life of the permit.
A SOC is not allowed:

- For effluent limitations based on technology-based standards established in accordance with federal requirements, if the deadline for compliance established in federal regulations has passed. 40 CFR § 125.3.
- For a newly constructed facility in most cases. Newly constructed facilities must meet applicable effluent limitations when discharge begins, because the facility has installed the appropriate control technology as specified in a permit or antidegradation review. A SOC is allowed for a new water quality based effluent limit that was not included in a previously public noticed permit or antidegradation review, which may occur if a regulation changes during construction.
- To develop a TMDL, UAA, or other study associated with development of a site specific criterion. A facility is not prohibited from conducting these activities, but a SOC may not be granted for conducting these activities.

In order to provide guidance to Permit Writers in developing SOCs, and attain a greater level of consistency, on October 25, 2012 the Department issued a policy on development of SOCs. This policy provides guidance to Permit Writers on the standard time frames for schedules for common activities, and guidance on factors that may modify the length of the schedule such as an affordability analysis.

☒ Applicable; The time given for effluent limitations of this permit listed under Interim Effluent Limitation and Final Effluent Limitations were established in accordance with [10 CSR 20-7.031(10)]. The facility has been given a schedule of compliance to meet final effluent limits for ammonia. The facility has been granted a three year schedule of compliance so changes may be made in order to bring the facility into compliance with final effluent limitations. It is likely the facility will have to be replaced with a more advanced treatment system. The facility has also been given six months to secure the services of a Certified C Operator and submit conformation to the Department of Natural Resources.

STORM WATER POLLUTION PREVENTION PLAN (SWPPP):
In accordance with 40 CFR 122.44(k) *Best Management Practices (BMPs)* to control or abate the discharge of pollutants when: (1) Authorized under section 304(e) of the Clean Water Act (CWA) for the control of toxic pollutants and hazardous substances from ancillary industrial activities: (2) Authorized under section 402(p) of the CWA for the control of storm water discharges; (3) Numeric effluent limitations are infeasible; or (4) the practices are reasonably necessary to achieve effluent limitations and standards or to carry out the purposes and intent of the CWA.

☒ Not Applicable; At this time, the permittee is not required to develop and implement a SWPPP.

VARIANCE:
As per the Missouri Clean Water Law § 644.061.4, variances shall be granted for such period of time and under such terms and conditions as shall be specified by the commission in its order. The variance may be extended by affirmative action of the commission. In no event shall the variance be granted for a period of time greater than is reasonably necessary for complying with the Missouri Clean Water Law §§644.006 to 644.141 or any standard, rule or regulation promulgated pursuant to Missouri Clean Water Law §§644.006 to 644.141.

☒ Not Applicable; This operating permit is not drafted under premises of a petition for variance.

WASTELOAD ALLOCATIONS (WLA) FOR LIMITS:
As per [10 CSR 20-2.010(78)], the amount of pollutant each discharger is allowed by the Department to release into a given stream after the Department has determined total amount of pollutant that may be discharged into that stream without endangering its water quality.

☒ Applicable; Wasteload allocations were calculated where applicable using water quality criteria or water quality model results and the dilution equation below:

$$Ce = \frac{(Qe + Qs)C - (Cs \times Qs)}{(Qe)}$$ (EPA/505/2-90-001, Section 4.5.5)

Where C = downstream concentration
Cs = upstream concentration
Qs = upstream flow
Ce = effluent concentration
Qe = effluent flow

Chronic wasteload allocations were determined using applicable chronic water quality criteria (CCC: criteria continuous concentration) and stream volume of flow at the edge of the mixing zone (MZ). Acute wasteload allocations were determined using applicable water quality criteria (CMC: criteria maximum concentration) and stream volume of flow at the edge of the zone of initial dilution (ZID).

Water quality based maximum daily and average monthly effluent limitations were calculated using methods and procedures outlined in USEPA's "Technical Support Document For Water Quality-based Toxics Control" (EPA/505/2-90-001).

Number of Samples "n":
Additionally, in accordance with the TSD for water quality-based permitting, effluent quality is determined by the underlying distribution of daily values, which is determined by the Long Term Average (LTA) associated with a particular Wasteload Allocation (WLA) and by the Coefficient of Variation (CV) of the effluent concentrations. Increasing or decreasing the monitoring frequency does not affect this underlying distribution or treatment performance, which should be, at a minimum, be targeted to comply with the values dictated by the WLA. Therefore, it is recommended that the actual planned frequency of monitoring normally be used to determine the value of "n" for calculating the AML. However, in situations where monitoring frequency is once per month or less, a higher value for "n" must be assumed for AML derivation purposes. Thus, the statistical procedure being employed using an assumed number of samples is "n = 4" at a minimum. For Total Ammonia as Nitrogen, "n = 30" is used.

WLA MODELING:
There are two general types of effluent limitations, technology-based effluent limits (TBELs) and water quality based effluent limits (WQBELs). If TBELs do not provide adequate protection for the receiving waters, then WQBEL must be used.

☒ Not Applicable; A WLA study was either not submitted or determined not applicable by Department staff.

WATER QUALITY STANDARDS:
Per [10 CSR 20-7.031(3)], General Criteria shall be applicable to all waters of the state at all times including mixing zones. Additionally, [40 CFR 122.44(d)(1)] directs the Department to establish in each NPDES permit to include conditions to achieve water quality established under Section 303 of the Clean Water Act, including State narrative criteria for water quality.

WHOLE EFFLUENT TOXICITY (WET) TEST:
A WET test is a quantifiable method of determining if a discharge from a facility may be causing toxicity to aquatic life by itself, in combination with or through synergistic responses when mixed with receiving stream water.

☒ Not Applicable; At this time, the permittee is not required to conduct WET test for this facility.

40 CFR 122.41(M) - BYPASSES:
The federal Clean Water Act (CWA), Section 402 prohibits wastewater dischargers from "bypassing" untreated or partially treated sewage (wastewater) beyond the headworks. A bypass is defined as an intentional diversion of waste streams from any portion of a treatment facility, [40 CFR 122.41(m)(1)(i)]. Additionally, Missouri regulation 10 CSR 20-2.010(11) defines a bypass as the diversion of wastewater from any portion of wastewater treatment facility or sewer system to waters of the state. Only under exceptional and specified limitations do the federal regulations allow for a facility to bypass some or all of the flow from its treatment process. Bypasses are prohibited by the CWA unless a permittee can meet all of the criteria listed in 40 CFR 122.41(m)(4)(i)(A), (B), & (C). Any bypasses from this facility are subject to the reporting required in 40 CFR 122.41(l)(6) and per Missouri's Standard Conditions I, Section B, part 2.b. Additionally, Anticipated Bypasses include bypasses from peak flow basins or similar devices designed for peak wet weather flows.

☒ Not Applicable; This facility does not anticipate bypassing.

303(d) LIST & TOTAL MAXIMUM DAILY LOAD (TMDL):
Section 303(d) of the federal Clean Water Act requires that each state identify waters that are not meeting water quality standards and for which adequate water pollution controls have not been required. Water quality standards protect such beneficial uses of water as whole body contact (such as swimming), maintaining fish and other aquatic life, and providing drinking water for people, livestock and wildlife. The 303(d) list helps state and federal agencies keep track of waters that are impaired but not addressed by normal water pollution control programs.

A TMDL is a calculation of the maximum amount of a given pollutant that a body of water can absorb before its water quality is affected. If a water body is determined to be impaired as listed on the 303(d) list, then a watershed management plan will be developed that shall include the TMDL calculation

☒ Not Applicable; This facility does not discharge to a 303(d) listed stream.

Part VI –2013 Water Quality Criteria for Ammonia

Upcoming changes to the Water Quality Standard for ammonia may require significant upgrades to wastewater treatment facilities.

On August 22, 2013, the U.S. Environmental Protection Agency (EPA) finalized new water quality criteria for ammonia, based on toxicity studies of mussels and gill breathing snails. Missouri's current ammonia criteria are based on toxicity testing of several species, but did not include data from mussels or gill breathing snails. Missouri is home to 69 of North America's mussel species, which are spread across the state. According to the Missouri Department of Conservation nearly two-thirds of the mussel species in Missouri are considered to be "of conservation concern". Nine species are listed as federally endangered, with an additional species currently proposed as endangered and another species proposed as threatened.

The adult forms of mussels that are seen in rivers, lakes, and streams are sensitive to pollutants because they are sedentary filter feeders. They vacuum up many pollutants with the food they bring in and cannot escape to new habitats, so they can accumulate toxins in their bodies and die. But very young mussels, called glochidia, are exceptionally sensitive to ammonia in water. As a result of a citizen suit, the EPA was compelled to conduct toxicity testing and develop ammonia water quality criteria that would be protective if young mussels may be present in a waterbody. These new criteria will apply to any discharge with ammonia levels that may pose a reasonable potential to violate the standards. Nearly all discharging domestic wastewater treatment facilities (cities, subdivisions, mobile home parks, etc.), as well as certain industrial and stormwater dischargers with ammonia in their effluent, will be affected by this change in the regulations.

When new water quality criteria are established by the EPA, states must adopt them into their regulations in order to keep their authorization to issue permits under the National Pollutant Discharge Elimination System (NPDES). States are required to review their water quality standards every three years, and if new criteria have been developed they must be adopted. States may be more protective than the Federal requirements, but not less protective. Missouri does not have the resources to conduct the studies necessary for developing new water quality standards, and therefore our standards mirror those developed by the EPA; however, we will utilize any available flexibility based on actual species of mussels that are native to Missouri and their sensitivity to ammonia.

Many treatment facilities in Missouri are currently scheduled to be upgraded to comply with the current water quality standards. But these new ammonia standards may require a different treatment technology than the one being considered by the permittee. It is important that permittees discuss any new and upcoming requirements with their consulting engineers to ensure that their treatment systems are capable of complying with the new requirements. The Department encourages permittees to construct treatment technologies that can attain effluent quality that supports the EPA ammonia criteria.

Ammonia toxicity varies by temperature and by pH of the water. Assuming a stable pH value, but taking into account winter and summer temperatures, Missouri includes two seasons of ammonia effluent limitations. Current effluent limitations in this permit are:

Summer – **5.5 mg/L** daily maximum, **1.3 mg/L** monthly average.
Winter – **7.5 mg/L** daily maximum, **2.9 mg/L** monthly average.

Under the new EPA criteria, where mussels of the family Unionidae are present or expected to be present, the <u>estimated</u> effluent limitations for a facility in a location such as this, which discharges to a receiving stream with no mixing will be:

Summer – **2.6 mg/L** daily maximum, **0.6 mg/L** monthly average.
Winter – **5.6 mg/L** daily maximum, **2.1 mg/L** monthly average.

Actual effluent limits will depend in part on the actual performance of the facility.

Operating permits for facilities in Missouri must be written based on current statutes and regulations. It is expected that the new WQS will be adopted in the next review of our standards. Therefore permits will be written with the existing effluent limitations until the new standards are adopted. To aid permittees in decision making, an advisory will be added to permit Fact Sheets notifying permittees of the expected effluent limitations for ammonia. When setting schedules of compliance for ammonia effluent limitations, consideration will be given to facilities that have recently constructed upgraded facilities to meet the current ammonia limitations.

For more information on this topic feel free to contact the Missouri Department of Natural Resources, Water Protection Program, Water Pollution Control Branch, Operating Permits Section at (573) 751-1300.

Part VII – Effluent Limits Determination

APPLICABLE DESIGNATIONS OF WATERS OF THE STATE:
As per Missouri's Effluent Regulations [10 CSR 20-7.015], the waters of the state are divided into the below listed seven (7) categories. Each category lists effluent limitations for specific parameters, which are presented in each outfall's Effluent Limitation Table and further discussed in the Derivation & Discussion of Limits section.

Missouri or Mississippi River [10 CSR 20-7.015(2)]: ☐
Lake or Reservoir [10 CSR 20-7.015(3)]: ☐
Losing [10 CSR 20-7.015(4)]: ☐
Metropolitan No-Discharge [10 CSR 20-7.015(5)]: ☐
Special Stream [10 CSR 20-7.015(6)]: ☐
Subsurface Water [10 CSR 20-7.015(7)]: ☐
All Other Waters [10 CSR 20-7.015(8)]: ☒

OUTFALL #001 – MAIN FACILITY OUTFALL
Effluent limitations derived and established in the below Effluent Limitations Table are based on current operations of the facility. Future permit action due to facility modification may contain new operating permit terms and conditions that supersede the terms and conditions, including effluent limitations, of this operating permit.

EFFLUENT LIMITATIONS TABLE:

PARAMETER	Unit	Basis for Limits	Daily Maximum	Weekly Average	Monthly Average	Modified	Previous Permit Limitations
Flow	MGD	1	*		*	No	*/*
BOD_5	mg/L	1		45	30	No	45/30
TSS	mg/L	1		45	30	No	45/30
pH	SU	1, 2	6.5-9.0			Yes	6.0-9.0
Ammonia as N (April 1 – Sept 30)	mg/L	2, 3, 5	5.5		1.3	Yes	*/*
Ammonia as N (Oct 1 – March 31)	mg/L	2, 3, 5	7.5		2.9	Yes	*/*
Dissolved Oxygen (DO)**	mg/L	3, 9	*		*	Yes	****
Escherichia coli	***	1, 3	1,134		1,134	Yes	****
Chlorine, Total Residual	µg/L	1, 3	17		8	Yes	mg/L

* - Monitoring requirement only.
** - For DO the Daily Maximum is a Daily Minimum and the Monthly Average is a Monthly Average Minimum.
*** - # of colonies/100mL; the Monthly Average for *E. coli* is a geometric mean.
**** - Parameter not previously established in previous state operating permit.

Basis for Limitations Codes:
1. State or Federal Regulation/Law
2. Water Quality Standard (includes RPA)
3. Water Quality Based Effluent Limits
4. Lagoon Policy
5. Ammonia Policy
6. Antidegradation Review
7. Antidegradation Policy
8. Water Quality Model
9. Best Professional Judgment
10. TMDL or Permit in lieu of TMDL
11. WET Test Policy

OUTFALL #001 – DERIVATION AND DISCUSSION OF LIMITS:

- **Flow**. In accordance with [40 CFR Part 122.44(i)(1)(ii)] the volume of effluent discharged from each outfall is needed to assure compliance with permitted effluent limitations. If the permittee is unable to obtain effluent flow, then it is the responsibility of the permittee to inform the Department, which may require the submittal of an operating permit modification.

- **Biochemical Oxygen Demand (BOD_5).** Effluent limitations have been retained from previous state operating permit, please see the **APPLICABLE DESIGNATION OF WATERS OF THE STATE** sub-section of the **Receiving Stream Information.**

- **Total Suspended Solids (TSS).** Effluent limitations have been retained from previous state operating permit, please see the **APPLICABLE DESIGNATION OF WATERS OF THE STATE** sub-section of the **Receiving Stream Information.**

- **pH**. Effluent limitation range is 6.5 – 9.0 Standard pH Units (SU), as per the applicable section of 10 CSR 20-7.015. pH is not to be averaged.

- **Total Ammonia Nitrogen**. Early Life Stages Present Total Ammonia Nitrogen criteria apply [10 CSR 20-7.031(4)(B)7.C. & Table B3] default pH 7.8 SU. No mixing considerations allowed; therefore, WLA = appropriate criterion.

Season	Temp (^oC)	pH (SU)	Total Ammonia Nitrogen CCC (mg/L)	Total Ammonia Nitrogen CMC (mg/L)
Summer	26	7.8	1.5	12.1
Winter	6	7.8	3.1	12.1

Summer: April 1 – September 30
Chronic WLA: C_e = ((0.045 + 0.0)1.5 – (0.0 * 0.01))/0.045
C_e = 1.5 mg/L

Acute WLA: C_e = ((0.045 + 0.0)12.1 – (0.0 * 0.01))/0.045
C_e = 12.1 mg/L

LTA_c = 1.5 mg/L (0.598) = 0.897 mg/L [CV = 1.29, 99th Percentile, 30 day avg.]
LTA_a = 12.1 mg/L (0.163) = 1.97 mg/L [CV = 1.29, 99th Percentile]

Use most protective number of LTA_c or LTA_a.

MDL = 0.897 mg/L (6.138) = 5.5 mg/L [CV = 1.29, 99th Percentile]
AML = 0.897 mg/L (1.430) = 1.3 mg/L [CV = 1.29, 95th Percentile, n =30]

Winter: October 1 – March 31
Chronic WLA: C_e = ((0.045 + 0.0)3.1 – (0.0 * 0.01))/0.045
C_e = 3.1 mg/L

Acute WLA: C_e = ((0.045 + 0.0)12.1 – (0.0 * 0.01))/0.045
C_e = 12.1 mg/L

LTA_c = 3.1 mg/L (0.780) = 2.42 mg/L [CV = 0.6, 99th Percentile, 30 day avg.]
LTA_a = 12.1 mg/L (0.321) = 3.89 mg/L [CV = 0.6, 99th Percentile]

Use most protective number of LTA_c or LTA_a.

MDL = 2.42 mg/L (3.11) = 7.5 mg/L [CV = 0.6, 99th Percentile]
AML = 2.42 mg/L (1.19) = 2.9 mg/L [CV = 0.6, 95th Percentile, n =30]

- **Dissolved Oxygen**. Monitoring for dissolved oxygen is included to determine whether reasonable potential to exceed water quality standards exists.

- ***Escherichia coli (E. coli)***. Daily Maximum and Monthly average of 1,134 per 100 ml as a geometric mean during the recreational season (April 1 – October 31), to protect Secondary Contact Recreation designated use of the receiving stream, as per 10 CSR 20-7.031(4)(C).

- **Total Residual Chlorine (TRC)**. Warm-water Protection of Aquatic Life CCC = 10 µg/L, CMC = 19 µg/L [10 CSR 20-7.031, Table A]. Background TRC = 0.0 µg/L.

Chronic WLA: C_e = 10 µg/L

Acute WLA: C_e = 19 µg/L

LTA_c = 10 (0.527) = 5.3 µg/L [CV = 0.6, 99th Percentile]
LTA_a = 19 (0.321) = 6.1 µg/L [CV = 0.6, 99th Percentile]

Use most protective number of LTA_c or LTA_a.

MDL = 5.3 (3.11) = **17** µg/L [CV = 0.6, 99th Percentile]
AML = 5.3 (1.55) = **8** µg/L [CV = 0.6, 95th Percentile, n = 4]

Minimum Sampling and Reporting Frequency Requirements.

PARAMETER	SAMPLING FREQUENCY	REPORTING FREQUENCY
Flow	once/quarter	once/quarter
BOD_5	once/quarter	once/quarter
TSS	once/quarter	once/quarter
pH	once/quarter	once/quarter
Ammonia as N	once/quarter	once/quarter
E. coli	once/quarter	once/quarter
Total Residual Chlorine	once/quarter	once/quarter
Dissolved Oxygen	once/quarter	once/quarter

Sampling Frequency Justification:
Sampling and Reporting Frequency was retained from previous permit. **For flows less than or equal to 100,000 gpd use:** The Clean Water Commission has directed the Department to proceed with amending 10 CSR 20-7.015 to reduce the sampling frequency required for E. coli to a lesser frequency, still protective of water quality standards, for smaller facilities, including those with discharges of 100,000 gallons per day or less.

Sampling Type Justification
As per 10 CSR 20-7.015, BOD_5 and TSS collected for sand filters may be grab samples. Grab samples must be collected for pH, Ammonia as N, *E. coli*, TRC, and Dissolved Oxygen. This is due to the holding time restriction for *E. coli*, the volatility of Ammonia and TRC, and the fact that pH and DO cannot be preserved and must be sampled in the field. As Ammonia samples must be immediately preserved with acid, therefore these samples are to be collected as a grab. For further information on sampling and testing methods please review 10 CSR 20-7.015(9)(A) 2.

Part VIII – Finding of Affordability

Pursuant to Section 644.145, RSMo., the Department is required to determine whether a permit or decision is affordable and makes a finding of affordability for certain permitting and enforcement decisions. This requirement applies to discharges from combined or separate sanitary sewer systems or publically-owned treatment works.

☒ Not Applicable; The Department is not required to determine findings of affordability because the facility is not a **combined or separate sanitary sewer system for a publically-owned treatment works.**

Part IX – Administrative Requirements

On the basis of preliminary staff review and the application of applicable standards and regulations, the Department, as administrative agent for the Missouri Clean Water Commission, proposes to issue a permit(s) subject to certain effluent limitations, schedules, and special conditions contained herein and within the operating permit. The proposed determinations are tentative pending public comment.

PERMIT SYNCHRONIZATION:
The Department of Natural Resources is currently undergoing a synchronization process for operating permits. Permits are normally issued on a five-year term, but to achieve synchronization many permits will need to be issued for less than the full five years allowed by regulation. The intent is that all permits within a watershed will move through the Watershed Based Management (WBM) cycle together will all expire in the same fiscal year. This will allow further streamlining by placing multiple permits within a smaller geographic area on public notice simultaneously, thereby reducing repeated administrative efforts. This will also allow the Department to explore a watershed based permitting effort at some point in the future. Renewal applications must continue to be submitted within 180 days of expiration, however, in instances where effluent data from the previous renewal is less than 4 years old, that data may be re-submitted to meet the requirements of the renewal application. If the permit provides a schedule of compliance for meeting new water quality based effluent limits beyond the expiration date of the permit, the time remaining in the schedule of compliance will be allotted in the renewed permit.

PUBLIC NOTICE:
The Department shall give public notice that a draft permit has been prepared and its issuance is pending. Additionally, public notice will be issued if a public hearing is to be held because of a significant degree of interest in and water quality concerns related to a draft permit. No public notice is required when a request for a permit modification or termination is denied; however, the requester and permittee must be notified of the denial in writing.

The Department must issue public notice of a pending operating permit or of a new or reissued statewide general permit. The public comment period is the length of time not less than 30 days following the date of the public notice which interested persons may submit written comments about the proposed permit.

For persons wanting to submit comments regarding this proposed operating permit, then please refer to the Public Notice page located at the front of this draft operating permit. The Public Notice page gives direction on how and where to submit appropriate comments.

☒ The Public Notice period for this operating permit was from December 13, 2013 to January 13, 2014. Comments were received and responded to via correspondence.

DATE OF FACT SHEET: 11/22/2013 REVISED: 01/13/2014

COMPLETED BY:

CAMERON EISTERHOLD
MISSOURI DEPARTMENT OF NATURAL RESOURCES
WATER PROTECTION PROGRAM
OPERATING PERMITS SECTION - DOMESTIC WASTEWATER UNIT
(573) 751-7326
cameron.eisterhold@dnr.mo.gov

Appendices

APPENDIX – RPA RESULTS:

Parameter	CMC*	RWC Acute*	CCC*	RWC Chronic*	n**	Range max/min	CV***	MF	RP Yes/No
Total Ammonia as Nitrogen (Summer) mg/L	12.1	72.90	1.5	72.90	10.00	24.3/0.28	1.29	3.00	YES
Total Ammonia as Nitrogen (Winter) mg/L	12.1	60.80	3.1	60.80	9.00	19/0.206	0.60	3.20	YES

N/A – Not Applicable
* - Units are (µg/L) unless otherwise noted.
** - If the number of samples is 10 or greater, then the CV value must be used in the WQBEL for the applicable constituent.
*** - Coefficient of Variation (CV) is calculated by dividing the Standard Deviation of the sample set by the Mean of the same sample set.
RWC – Receiving Water Concentration. It is the concentration of a toxicant or the parameter toxicity in the receiving water after mixing (if applicable).
n – Is the number of samples.
MF – Multiplying Factor. 99% Confidence Level and 99% Probability Basis.
RP – Reasonable Potential. It is where an effluent is projected or calculated to cause an excursion above a water quality standard based on a number of factors including, as a minimum, the four factors listed in 40 CFR 122.44(d)(1)(ii).

Reasonable Potential Analysis is conducted as per (TSD, EPA/505/2-90-001, Section 3.3.2). A more detailed version including calculations of this RPA is available upon request.

STANDARD CONDITIONS FOR NPDES PERMITS
ISSUED BY
THE MISSOURI DEPARTMENT OF NATURAL RESOURCES
MISSOURI CLEAN WATER COMMISSION
REVISED
NOVEMBER 1, 2013

These Standard Conditions incorporate permit conditions as required by 40 CFR 122.41 or other applicable state statutes or regulations. These minimum conditions apply unless superseded by requirements specified in the permit.

Part I – General Conditions
Section A – Sampling, Monitoring, and Recording

1. **Sampling Requirements.**
   a. Samples and measurements taken for the purpose of monitoring shall be representative of the monitored activity.
   b. All samples shall be taken at the outfall(s) or Missouri Department of Natural Resources (Department) approved sampling location(s), and unless specified, before the effluent joins or is diluted by any other body of water or substance.

2. **Monitoring Requirements**.
   a. Records of monitoring information shall include:
      i. The date, exact place, and time of sampling or measurements;
      ii. The individual(s) who performed the sampling or measurements;
      iii. The date(s) analyses were performed;
      iv. The individual(s) who performed the analyses;
      v. The analytical techniques or methods used; and
      vi. The results of such analyses.
   b. If the permittee monitors any pollutant more frequently than required by the permit at the location specified in the permit using test procedures approved under 40 CFR Part 136, or another method required for an industry-specific waste stream under 40 CFR subchapters N or O, the results of such monitoring shall be included in the calculation and reported to the Department with the discharge monitoring report data (DMR) submitted to the Department pursuant to Section B, paragraph 7.

3. **Sample and Monitoring Calculations.** Calculations for all sample and monitoring results which require averaging of measurements shall utilize an arithmetic mean unless otherwise specified in the permit.

4. **Test Procedures**. The analytical and sampling methods used shall conform to the reference methods listed in 10 CSR 20-7.015 unless alternates are approved by the Department. The facility shall use sufficiently sensitive analytical methods for detecting, identifying, and measuring the concentrations of pollutants. The facility shall ensure that the selected methods are able to quantify the presence of pollutants in a given discharge at concentrations that are low enough to determine compliance with Water Quality Standards in 10 CSR 20-7.031 or effluent limitations unless provisions in the permit allow for other alternatives. A method is "sufficiently sensitive" when; 1) the method minimum level is at or below the level of the applicable water quality criterion for the pollutant or, 2) the method minimum level is above the applicable water quality criterion, but the amount of pollutant in a facility's discharge is high enough that the method detects and quantifies the level of pollutant in the discharge, or 3) the method has the lowest minimum level of the analytical methods approved under 10 CSR 20-7.015. These methods are also required for parameters that are listed as monitoring only, as the data collected may be used to determine if limitations need to be established. A permittee is responsible for working with their contractors to ensure that the analysis performed is sufficiently sensitive.

5. **Record Retention.** Except for records of monitoring information required by the permit related to the permittee's sewage sludge use and disposal activities, which shall be retained for a period of at least five (5) years (or longer as required by 40 CFR part 503), the permittee shall retain records of all monitoring information, including all calibration and maintenance records and all original strip chart recordings for continuous monitoring instrumentation, copies of all reports required by the permit, and records of all data used to complete the application for the permit, for a period of at least three (3) years from the date of the sample, measurement, report or application. This period may be extended by request of the Department at any time.

6. **Illegal Activities.**
   a. The Federal Clean Water Act provides that any person who falsifies, tampers with, or knowingly renders inaccurate any monitoring device or method required to be maintained under the permit shall, upon conviction, be punished by a fine of not more than $10,000, or by imprisonment for not more than two (2) years, or both. If a conviction of a person is for a violation committed after a first conviction of such person under this paragraph, punishment is a fine of not more than $20,000 per day of violation, or by imprisonment of not more than four (4) years, or both.
   b. The Missouri Clean Water Law provides that any person or who falsifies, tampers with, or knowingly renders inaccurate any monitoring device or method required to be maintained pursuant to sections 644.006 to 644.141 shall, upon conviction, be punished by a fine of not more than $10,000, or by imprisonment for not more than six (6) months, or by both. Second and successive convictions for violation under this paragraph by any person shall be punished by a fine of not more than $50,000 per day of violation, or by imprisonment for not more than two (2) years, or both.

Section B – Reporting Requirements

1. **Planned Changes.**
   a. The permittee shall give notice to the Department as soon as possible of any planned physical alterations or additions to the permitted facility when:
      i. The alteration or addition to a permitted facility may meet one of the criteria for determining whether a facility is a new source in 40 CFR 122.29(b); or
      ii. The alteration or addition could significantly change the nature or increase the quantity of pollutants discharged. This notification applies to pollutants which are subject neither to effluent limitations in the permit, nor to notification requirements under 40 CFR 122.42(a)(1);
      iii. The alteration or addition results in a significant change in the permittee's sludge use or disposal practices, and such alteration, addition, or change may justify the application of permit conditions that are different from or absent in the existing permit, including notification of additional use or disposal sites not reported during the permit application process or not reported pursuant to an approved land application plan;
      iv. Any facility expansions, production increases, or process modifications which will result in a new or substantially different discharge or sludge characteristics must be reported to the Department 60 days before the facility or process modification begins. Notification may be accomplished by application for a new permit. If the discharge does not violate effluent limitations specified in the permit, the facility is to submit a notice to the Department of the changed discharge at least 30 days before such changes. The Department may require a construction permit and/or permit modification as a result of the proposed changes at the facility.

2. **Twenty-Four Hour Reporting.**
   a. The permittee shall report any noncompliance which may endanger health or the environment. Relevant information shall be provided orally or via the current electronic method approved by the Department, within 24 hours from the time the permittee becomes aware of the circumstances, and shall be reported to the appropriate Regional Office during normal business hours or the Environmental Emergency Response hotline at 573-634-2436 outside of normal business hours. A written submission shall also be provided within five (5) business days of the time the permittee becomes aware of the circumstances. The written submission shall contain a description of the noncompliance and its cause; the period of noncompliance, including exact dates and times, and if the noncompliance has not been corrected, the anticipated time it is expected to continue; and steps taken or planned to reduce, eliminate, and prevent reoccurrence of the noncompliance.

b. The following shall be included as information which must be reported within 24 hours under this paragraph.
   i. Any unanticipated bypass which exceeds any effluent limitation in the permit.
   ii. Any upset which exceeds any effluent limitation in the permit.
   iii. Violation of a maximum daily discharge limitation for any of the pollutants listed by the Department in the permit required to be reported within 24 hours.

c. The Department may waive the written report on a case-by-case basis for reports under paragraph 2. b. of this section if the oral report has been received within 24 hours.

3. **Sanitary Sewer Overflow Reporting.** The following requirements solely reflect reporting obligations, and reporting does not necessarily reflect noncompliance, which may depend on the circumstances of the incident reported.
   a. Twenty-Four Hour (24-Hour) Reporting. The permittee or owner shall report any incident in which wastewater escapes the collection system such that it reaches waters of the state or it may pose an imminent or substantial endangerment to the health or welfare of persons. Relevant information shall be provided orally or via the current electronic method approved by the Department within 24 hours from the time the permittee becomes aware of the incident. A written submission shall also be provided within five (5) business days of the time the permittee or owner becomes aware of the incident. The Department may waive the written report on a case-by-case basis if the oral report has been received within 24 hours. The five (5) day reports may be provided via the current electronic method approved by the Department.
   b. Incidents Reported via Discharge Monitoring Reports (DMRs). The permittee or owner shall report any event in which wastewater escapes the collection system, which does not enter waters of the state and is not expected to pose an imminent or substantial endangerment to the health or welfare of persons, which occur typically during wet weather events. Relevant information shall be provided with the permittee's or owner's DMRs.

4. **Anticipated Noncompliance**. The permittee shall give advance notice to the Department of any planned changes in the permitted facility or activity which may result in noncompliance with permit requirements. The notice shall be submitted to the Department 60 days prior to such changes or activity.

5. **Compliance Schedules.** Reports of compliance or noncompliance with, or any progress reports on, interim and final requirements contained in any compliance schedule of the permit shall be submitted no later than 14 days following each schedule date. The report shall provide an explanation for the instance of noncompliance and a proposed schedule or anticipated date, for achieving compliance with the compliance schedule requirement.

6. **Other Noncompliance.** The permittee shall report all instances of noncompliance not reported under paragraphs 2, 3, 4, and 7 of this section, at the time monitoring reports are submitted. The reports shall contain the information listed in paragraph 2. a. of this section.

7. **Other Information**. Where the permittee becomes aware that it failed to submit any relevant facts in a permit application, or submitted incorrect information in a permit application or in any report to the Department, it shall promptly submit such facts or information.

8. **Discharge Monitoring Reports.**
   a. Monitoring results shall be reported at the intervals specified in the permit.
   b. Monitoring results must be reported to the Department via the current method approved by the Department, unless the permittee has been granted a waiver from using the method. If the permittee has been granted a waiver, the permittee must use forms provided by the Department.
   c. Monitoring results shall be reported to the Department no later than the 28th day of the month following the end of the reporting period.

Section C – Bypass/Upset Requirements

1. **Definitions.**
   a. *Bypass*: the intentional diversion of waste streams from any portion of a treatment facility.
   b. *Severe Property Damage*: substantial physical damage to property, damage to the treatment facilities which causes them to become inoperable, or substantial and permanent loss of natural resources which can reasonably be expected to occur in the absence of a bypass. Severe property damage does not mean economic loss caused by delays in production.
   c. *Upset*: an exceptional incident in which there is unintentional and temporary noncompliance with technology based permit effluent limitations because of factors beyond the reasonable control of the permittee. An upset does not include noncompliance to the extent caused by operational error, improperly designed treatment facilities, inadequate treatment facilities, lack of preventive maintenance, or careless or improper operation.

2. **Bypass Requirements.**
   a. Bypass not exceeding limitations. The permittee may allow any bypass to occur which does not cause effluent limitations to be exceeded, but only if it also is for essential maintenance to assure efficient operation. These bypasses are not subject to the provisions of paragraphs 2. b. and 2. c. of this section.
   b. Notice.
      i. Anticipated bypass. If the permittee knows in advance of the need for a bypass, it shall submit prior notice, if possible at least 10 days before the date of the bypass.
      ii. Unanticipated bypass. The permittee shall submit notice of an unanticipated bypass as required in Section B – Reporting Requirements, paragraph 5 (24-hour notice).
   c. Prohibition of bypass.
      i. Bypass is prohibited, and the Department may take enforcement action against a permittee for bypass, unless:
         1. Bypass was unavoidable to prevent loss of life, personal injury, or severe property damage;
         2. There were no feasible alternatives to the bypass, such as the use of auxiliary treatment facilities, retention of untreated wastes, or maintenance during normal periods of equipment downtime. This condition is not satisfied if adequate back-up equipment should have been installed in the exercise of reasonable engineering judgment to prevent a bypass which occurred during normal periods of equipment downtime or preventive maintenance; and
         3. The permittee submitted notices as required under paragraph 2. b. of this section.
      ii. The Department may approve an anticipated bypass, after considering its adverse effects, if the Department determines that it will meet the three (3) conditions listed above in paragraph 2. c. i. of this section.

3. **Upset Requirements.**
   a. Effect of an upset. An upset constitutes an affirmative defense to an action brought for noncompliance with such technology based permit effluent limitations if the requirements of paragraph 3. b. of this section are met. No determination made during administrative review of claims that noncompliance was caused by upset, and before an action for noncompliance, is final administrative action subject to judicial review.
   b. Conditions necessary for a demonstration of upset. A permittee who wishes to establish the affirmative defense of upset shall demonstrate, through properly signed, contemporaneous operating logs, or other relevant evidence that:
      i. An upset occurred and that the permittee can identify the cause(s) of the upset;
      ii. The permitted facility was at the time being properly operated; and
      iii. The permittee submitted notice of the upset as required in Section B – Reporting Requirements, paragraph 2. b. ii. (24-hour notice).
      iv. The permittee complied with any remedial measures required under Section D – Administrative Requirements, paragraph 4.
   c. Burden of proof. In any enforcement proceeding, the permittee seeking to establish the occurrence of an upset has the burden of proof.

Section D – Administrative Requirements

1. **Duty to Comply.** The permittee must comply with all conditions of this permit. Any permit noncompliance constitutes a violation of the Missouri Clean Water Law and Federal Clean Water Act and is grounds for enforcement action; for permit termination, revocation and reissuance, or modification; or denial of a permit renewal application.
   a. The permittee shall comply with effluent standards or prohibitions established under section 307(a) of the Federal Clean Water Act for toxic pollutants and with standards for sewage sludge use or disposal established under section 405(d) of the CWA within the time provided in the regulations that establish these standards or prohibitions or standards for sewage sludge use or disposal, even if the permit has not yet been modified to incorporate the requirement.
   b. The Federal Clean Water Act provides that any person who violates section 301, 302, 306, 307, 308, 318 or 405 of the Act, or any permit condition or limitation implementing any such sections in a permit issued under section 402, or any requirement imposed in a pretreatment program approved under sections 402(a)(3) or 402(b)(8) of the Act, is subject to a civil penalty not to exceed $25,000 per day for each violation. The Federal Clean Water Act provides that any person who negligently violates sections 301, 302, 306, 307, 308, 318, or 405 of the Act, or any condition or limitation implementing any of such sections in a permit issued under section 402 of the Act, or any requirement imposed in a pretreatment program approved under section 402(a)(3) or 402(b)(8) of the Act, is subject to criminal penalties of $2,500 to $25,000 per day of violation, or imprisonment of not more than one (1) year, or both. In the case of a second or subsequent conviction for a negligent violation, a person shall be subject to criminal penalties of not more than $50,000 per day of violation, or by imprisonment of not more than two (2) years, or both. Any person who knowingly violates such sections, or such conditions or limitations is subject to criminal penalties of $5,000 to $50,000 per day of violation, or imprisonment for not more than three (3) years, or both. In the case of a second or subsequent conviction for a knowing violation, a person shall be subject to criminal penalties of not more than $100,000 per day of violation, or imprisonment of not more than six (6) years, or both. Any person who knowingly violates section 301, 302, 303, 306, 307, 308, 318 or 405 of the Act, or any permit condition or limitation implementing any of such sections in a permit issued under section 402 of the Act, and who knows at that time that he thereby places another person in imminent danger of death or serious bodily injury, shall, upon conviction, be subject to a fine of not more than $250,000 or imprisonment of not more than 15 years, or both. In the case of a second or subsequent conviction for a knowing endangerment violation, a person shall be subject to a fine of not more than $500,000 or by imprisonment of not more than 30 years, or both. An organization, as defined in section 309(c)(3)(B)(iii) of the CWA, shall, upon conviction of violating the imminent danger provision, be subject to a fine of not more than $1,000,000 and can be fined up to $2,000,000 for second or subsequent convictions.
   c. Any person may be assessed an administrative penalty by the EPA Director for violating section 301, 302, 306, 307, 308, 318 or 405 of this Act, or any permit condition or limitation implementing any of such sections in a permit issued under section 402 of this Act. Administrative penalties for Class I violations are not to exceed $10,000 per violation, with the maximum amount of any Class I penalty assessed not to exceed $25,000. Penalties for Class II violations are not to exceed $10,000 per day for each day during which the violation continues, with the maximum amount of any Class II penalty not to exceed $125,000.
   d. It is unlawful for any person to cause or permit any discharge of water contaminants from any water contaminant or point source located in Missouri in violation of sections 644.006 to 644.141 of the Missouri Clean Water Law, or any standard, rule or regulation promulgated by the commission. In the event the commission or the director determines that any provision of sections 644.006 to 644.141 of the Missouri Clean Water Law or standard, rules, limitations or regulations promulgated pursuant thereto, or permits issued by, or any final abatement order, other order, or determination made by the commission or the director, or any filing requirement pursuant to sections 644.006 to 644.141 of the Missouri Clean Water Law or any other provision which this state is required to enforce pursuant to any federal water pollution control act, is being, was, or is in imminent danger of being violated, the commission or director may cause to have instituted a civil action in any court of competent jurisdiction for the injunctive relief to prevent any such violation or further violation or for the assessment of a penalty not to exceed $10,000 per day for each day, or part thereof, the violation occurred and continues to occur, or both, as the court deems proper. Any person who willfully or negligently commits any violation in this paragraph shall, upon conviction, be punished by a fine of not less than $2,500 nor more than $25,000 per day of violation, or by imprisonment for not more than one year, or both. Second and successive convictions for violation of the same provision of this paragraph by any person shall be punished by a fine of not more than $50,000 per day of violation, or by imprisonment for not more than two (2) years, or both.

2. **Duty to Reapply.**
   a. If the permittee wishes to continue an activity regulated by this permit after the expiration date of this permit, the permittee must apply for and obtain a new permit.
   b. A permittee with a currently effective site-specific permit shall submit an application for renewal at least 180 days before the expiration date of the existing permit, unless permission for a later date has been granted by the Department. (The Department shall not grant permission for applications to be submitted later than the expiration date of the existing permit.)
   c. A permittees with currently effective general permit shall submit an application for renewal at least 30 days before the existing permit expires, unless the permittee has been notified by the Department that an earlier application must be made. The Department may grant permission for a later submission date. (The Department shall not grant permission for applications to be submitted later than the expiration date of the existing permit.)

3. **Need to Halt or Reduce Activity Not a Defense.** It shall not be a defense for a permittee in an enforcement action that it would have been necessary to halt or reduce the permitted activity in order to maintain compliance with the conditions of this permit.

4. **Duty to Mitigate.** The permittee shall take all reasonable steps to minimize or prevent any discharge or sludge use or disposal in violation of this permit which has a reasonable likelihood of adversely affecting human health or the environment.

5. **Proper Operation and Maintenance**. The permittee shall at all times properly operate and maintain all facilities and systems of treatment and control (and related appurtenances) which are installed or used by the permittee to achieve compliance with the conditions of this permit. Proper operation and maintenance also includes adequate laboratory controls and appropriate quality assurance procedures. This provision requires the operation of back-up or auxiliary facilities or similar systems which are installed by a permittee only when the operation is necessary to achieve compliance with the conditions of the permit.

6. **Permit Actions.**
   a. Subject to compliance with statutory requirements of the Law and Regulations and applicable Court Order, this permit may be modified, suspended, or revoked in whole or in part during its term for cause including, but not limited to, the following:
      i. Violations of any terms or conditions of this permit or the law;
      ii. Having obtained this permit by misrepresentation or failure to disclose fully any relevant facts;
      iii. A change in any circumstances or conditions that requires either a temporary or permanent reduction or elimination of the authorized discharge; or
      iv. Any reason set forth in the Law or Regulations.
   b. The filing of a request by the permittee for a permit modification, revocation and reissuance, or termination, or a notification of planned changes or anticipated noncompliance does not stay any permit condition.

7. **Permit Transfer.**
   a. Subject to 10 CSR 20-6.010, an operating permit may be transferred upon submission to the Department of an application to transfer signed by the existing owner and the new owner, unless prohibited by the terms of the permit. Until such time the permit is officially transferred, the original permittee remains responsible for complying with the terms and conditions of the existing permit.
   b. The Department may require modification or revocation and reissuance of the permit to change the name of the permittee and incorporate such other requirements as may be necessary under the Missouri Clean Water Law or the Federal Clean Water Act.
   c. The Department, within 30 days of receipt of the application, shall notify the new permittee of its intent to revoke or reissue or transfer the permit.

8. **Toxic Pollutants.** The permittee shall comply with effluent standards or prohibitions established under section 307(a) of the Federal Clean Water Act for toxic pollutants and with standards for sewage sludge use or disposal established under section 405(d) of the Federal Clean Water Act within the time provided in the regulations that establish these standards or prohibitions or standards for sewage sludge use or disposal, even if the permit has not yet been modified to incorporate the requirement.

9. **Property Rights.** This permit does not convey any property rights of any sort, or any exclusive privilege.

10. **Duty to Provide Information.** The permittee shall furnish to the Department, within a reasonable time, any information which the Department may request to determine whether cause exists for modifying, revoking and reissuing, or terminating this permit or to determine compliance with this permit. The permittee shall also furnish to the Department upon request, copies of records required to be kept by this permit.

11. **Inspection and Entry.** The permittee shall allow the Department, or an authorized representative (including an authorized contractor acting as a representative of the Department), upon presentation of credentials and other documents as may be required by law, to:
    a. Enter upon the permittee's premises where a regulated facility or activity is located or conducted, or where records must be kept under the conditions of the permit;
    b. Have access to and copy, at reasonable times, any records that must be kept under the conditions of this permit;
    c. Inspect at reasonable times any facilities, equipment (including monitoring and control equipment), practices, or operations regulated or required under this permit; and
    d. Sample or monitor at reasonable times, for the purposes of assuring permit compliance or as otherwise authorized by the Federal Clean Water Act or Missouri Clean Water Law, any substances or parameters at any location.

12. **Closure of Treatment Facilities.**
    a. Persons who cease operation or plan to cease operation of waste, wastewater, and sludge handling and treatment facilities shall close the facilities in accordance with a closure plan approved by the Department.
    b. Operating Permits under 10 CSR 20-6.010 or under 10 CSR 20-6.015 are required until all waste, wastewater, and sludges have been disposed of in accordance with the closure plan approved by the Department and any disturbed areas have been properly stabilized. Disturbed areas will be considered stabilized when perennial vegetation, pavement, or structures using permanent materials cover all areas that have been disturbed. Vegetative cover, if used, shall be at least 70% plant density over 100% of the disturbed area.

13. **Signatory Requirement.**
    a. All permit applications, reports required by the permit, or information requested by the Department shall be signed and certified. (See 40 CFR 122.22 and 10 CSR 20-6.010)
    b. The Federal Clean Water Act provides that any person who knowingly makes any false statement, representation, or certification in any record or other document submitted or required to be maintained under this permit, including monitoring reports or reports of compliance or non-compliance shall, upon conviction, be punished by a fine of not more than $10,000 per violation, or by imprisonment for not more than six (6) months per violation, or by both.
    c. The Missouri Clean Water Law provides that any person who knowingly makes any false statement, representation or certification in any application, record, report, plan, or other document filed or required to be maintained pursuant to sections 644.006 to 644.141 shall, upon conviction, be punished by a fine of not more than ten thousand dollars, or by imprisonment for not more than six months, or by both.

14. **Severability.** The provisions of the permit are severable, and if any provision of the permit, or the application of any provision of the permit to any circumstance, is held invalid, the application of such provision to other circumstances, and the remainder of the permit, shall not be affected thereby.

STANDARD CONDITIONS FOR NPDES PERMITS
ISSUED BY
THE MISSOURI DEPARTMENT OF NATURAL RESOURCES
MISSOURI CLEAN WATER COMMISSION
AUGUST 15, 1994

PART III – SLUDGE & BIOSOLIDS FROM DOMESTIC WASTEWATER TREATMENT FACILITIES

SECTION A – GENERAL REQUIREMENTS

1. This permit pertains to sludge requirements under the Missouri Clean Water Law and regulation and incorporates applicable federal sludge disposal requirements under 40 CFR 503. The Environmental Protection Agency (EPA) has principal authority for permitting and enforcement of the federal sludge regulations under 40 CFS 503 until such time as Missouri is delegated the new EPA sludge program. EPA has reviewed and accepted these standard sludge conditions. EPA may choose to issue a separate sludge addendum to this permit or a separate federal sludge permit at their discretion to further address federal requirements.
2. These PART III Standard Conditions apply only to sludge and biosolids generated at domestic wastewater treatment facilities, including public owned treatment works (POTW) and privately owned facilities.
3. Sludge and Biosolids Use and Disposal Practices.
   a. Permittee is authorized to operate the sludge and biosolids treatment, storage, use, and disposal facilities listed in the facility description of this permit.
   b. Permittee shall not exceed the design sludge volume listed in the facility description and shall not use sludge disposal methods that are not listed in the facility description, without prior approval of the permitting authority.
   c. Permittee is authorized to operate the storage, treatment or generating sites listed in the Facility Description section of this permit.
   d. A separate operating permit is required for each operating location where sludge or biosolids are generated, stored, treated, or disposed, unless specifically exempted in this permit or in 10 CSR 20, Chapter 6 regulations. For land application, see section H, subsection 3 of these standard conditions.
4. Sludge Received From Other Facilities
   a. Permittees may accept domestic wastewater sludge from other facilities including septic tank pumpings from residential sources as long as the design sludge volume is not exceeded and the treatment facility performance is not impaired.
   b. The permittee shall obtain a signed statement from the sludge generator or hauler that certifies the type and source of the sludge.
   c. Sludge received from out-of-state generators shall receive prior approval of the permitting authority and shall be listed in the facility description or special conditions section of the permit.
5. These permit requirements do not supersede nor remove liability for compliance with county and other local ordinances.
6. These permit requirements do not supersede nor remove liability for compliance with other environmental regulations such as odor emissions under the Missouri Air Pollution Control Law and regulations.
7. This permit may (after due process) be modified, or alternatively revoked and reissued, to comply with any applicable sludge disposal standard or limitation issued or approved under Section 405(d) of the Clean Water Act or under Chapter 644 RsMo.
8. In addition to the STANDARD CONDITIONS, the Department may include sludge limitations in the special conditions portion or other sections of this permit.
9. Alternate Limits in Site Specific Permit.
   Where deemed appropriate, the Department may require an individual site specific permit in order to authorize alternate limitations:
   a. An individual permit must be obtained for each operating location, including application sites.
   b. To request a site specific permit, an individual permit application, permit fees, and supporting documents shall be submitted for each operating location. This shall include a detailed sludge/biosolids management plan or engineering report.
10. Exceptions to these Standard Conditions may be authorized on a case-by-case basis by the Department, as follows:
    a. The Department will prepare a permit modification and follow permit public notice provisions as applicable under 10 CSR 20-6.020, 40 CFR 124.10, and 40 CFR 501.15(a)(2)(ix)(E). This includes notification of the owners of property located adjacent to each land application site, where appropriate.
    b. Exceptions cannot be grated where prohibited by the federal sludge regulations under 40 CFR 503.
11. Compliance Period
    Compliance shall be achieved as expeditiously as possible but no later than the compliance dates under 40 CFR 503.2.

SECTION B – DEFINITIONS

1. Biosolids means an organic fertilizer or soil amendment produced by the treatment of domestic wastewater sludge. Untreated sludge or sludge that does not conform to the pollutants and pathogen treatment requirements in this permit is not considered biosolids.
2. Biosolids land application facility is a facility where biosolids are spread onto the land at agronomic rates for production of food or fiber. The facility includes any structures necessary to store the biosolids until soil, weather, and crop conditions are favorable for land application.
3. Class A biosolids means a material that has met the Class A pathogen reduction requirements or equivalent treatment by a Process to Further Reduce Pathogens (PFRP) in accordance with 40 CFR 503.
4. Class B biosolids means a material that has met the Class B pathogen reduction requirements or equivalent treatment by a Process to Significantly Reduce Pathogens (PFRP) in accordance with 40 CFR 503.
5. Domestic wastewater means wastewater originating from the sanitary conveniences of residences, commercial buildings, factories and institutions; or co-mingled sanitary and industrial wastewater processed by a public owned treatment works (POTW) or privately owned facility.
6. Mechanical treatment plants are wastewater treatment facilities that use mechanical devices to treat wastewater, including septic tanks, extended aeration, activated sludge, contact stabilization, trickling filters, rotating biological discs, and other similar facilities. It does not include unaerated wastewater treatment lagoons and constructed wetlands for wastewater treatment.
7. Operating location as defined in 10 CSR 20-2.010 is all contiguous lands owned, operated or controlled by one (1) person or by two (2) or more persons jointly or as tenants in common.
8. Plant Available Nitrogen (PAN) is the nitrogen that will be available to plants during the next growing season after biosolids application.
9. Sinkhole is a depression in the land surface into which surface water flows to join an underground drainage system.
10. Site Specific Permit is a permit that has alternate limits developed to address specific site conditions for each land application site or storage site.
11. Sludge is the solid, semisolid, or liquid residue removed during the treatment of wastewater. Sludge includes septage removed from septic tanks.
12. Sludge lagoon is an earthen basin that receives sludge that has been removed from a wastewater treatment facility. It does not include a wastewater treatment lagoon or sludge treatment units that are not a part of a mechanical wastewater treatment facility.
13. Wetlands are those areas that are inundated or saturated by surface or groundwater at a frequency and duration sufficient to support, and that under normal circumstances do support, a prevalence of vegetation typically adapted for life in saturated soil conditions. Wetlands generally include swamp, marshes, bogs, and similar areas. Wetlands do not include constructed wetlands used for wastewater treatment.

SECTION C – MECHANICAL WASTEWATER TREATMENT FACILITIES

1. Sludge shall be routinely removed from the wastewater treatment facilities and handled according to the permit facility description and sludge conditions in this permit.
2. The permittee shall operate the facility so that there is no sludge loss into the discharged effluent in excess of permit limits, no sludge bypassing, and no discharge of sludge to waters of the state.
3. Mechanical treatment plants shall have separate sludge storage compartments in accordance with 10 CSR 20, Chapter 8. Failure to remove sludge from these storage compartments on the required design schedule is a violation of this permit.

SECTION D – SLUDGE DISPOSED AT OTHER TREATMENT FACILITY OR CONTRACT HAULER

1. This section applies to permittees that haul sludge to another treatment facility for disposal or use contract haulers to remove and dispose of sludge.
2. Permittees that use contract haulers are responsible for compliance with all the terms of this permit including final disposal, unless the hauler has a separate permit for sludge or biosolids disposal issued by the Department; or the hauler transports the sludge to another permitted treatment facility.
3. The permittee shall require documentation from the contractor of the disposal methods used and permits obtained by the contractor.
4. Testing of sludge, other than total solids content, is not required if sludge is hauled to a municipal wastewater treatment facility or other permitted wastewater treatment facility.

SECTION E – WASTEWATER TREATMENT LAGOONS AND STORMWATER RETENTION BASINS

1. Sludge that is retained within a wastewater treatment lagoon is subject to sludge disposal requirements when the sludge is removed from the lagoon or when the lagoon ceases to receive and treat wastewater.
2. If sludge is removed during the year, an annual sludge report must be submitted.
3. Storm water retention basins or other earthen basins, which have been used as sludge storage for a mechanical treatment system is considered a sludge lagoon and must comply with Section G of this permit.

SECTION F – INCINERATION OF SLUDGE

1. Sludge incineration facilities shall comply with the requirements of 40 CFR 503 Subpart E; air pollution control regulations under 10 CSR 10; and solid waste management regulations under 10 CSR 80.
2. Permittee may be authorized under the facility description of this permit to store incineration ash in lagoons or ash ponds. This permit does not authorize the disposal of incineration ash. Incineration ash shall be disposed in accordance with 10 CSR 80; or if the ash is determined to be hazardous waste, shall be disposed in accordance with 10 CSR 25.
3. In addition to normal sludge monitoring, incineration facilities shall report the following as part of the annual report, quantity of sludge incinerated, quantity of ash generated, quantity of ash stored; and ash use or disposal method, quantity, and location. Permittee shall also provide the name of the disposal facility and the applicable permit number.
4. Additional limitations, monitoring, and reporting requirements may be addressed in the Special Conditions sections of this permit.

SECTION G – SURFACE DISPOSAL SITES AND SLUDGE LAGOONS

1. Surface disposal sites shall comply with the requirements in 40 CFR 503 Subpart C, and solid waste disposal regulations under 10 CSR 80.
2. Additional limitations, monitoring, and reporting requirements may be addressed in the Special Conditions section of this permit.
3. Effective February 19, 1995, a sludge lagoon that has been in use for more than two years without removal of accumulated sludge, or that has not been properly closed shall comply with one of the following options:
    a. Permittee shall obtain a site specific permit to address surface disposal requirements under 40 CFR 503, ground water quality regulations under 10 CSR 20, Chapter 7 and 8, and solid waste management regulations under 10 CSR 80;
    b. Permittee shall clean out the sludge lagoon to remove any sludge over two years old and shall continue to remove accumulated sludge at least every two years or an alternate schedule approved under 40 CFR 503.20(b). In order to avoid damage to the lagoon seal during cleaning, the permittee may leave a layer of sludge on the bottom of the lagoon, upon prior approval of the Department; or
    c. Permittee shall close the lagoon in accordance with Section 1.

SECTION H – LAND APPLICATION

1. The permittee shall not land apply sludge or biosolids unless land application is authorized in the Facility Description or special conditions section of the permit.
2. This permit replaces and terminates all previous sludge management plan approvals by the Department for land application of sludge or biosolids.
3. Land application sites within a 20 mile radius of the wastewater treatment facility are authorized under this permit when biosolids are applied for beneficial use in accordance with these standard conditions unless a site specific permit is required under Section A, Subsection 9.
4. Biosolids shall not be applied unless authorized in this permit or exempted under 10 CSR 20, Chapter 6.
    a. This permit does not authorize the land application of sludge except when sludge meets the definition of biosolids.
    b. This permit authorizes “Class A or B” biosolids derived from domestic wastewater sludges to be land applied onto grass land, crop land, timber land or other similar agricultural or silviculture lands at rates suitable for beneficial use as organic fertilizer and soil conditioner.
5. Public Contact Sites.
    Permittees who wish to apply Class A biosolids to public contact sites must obtain approval from the Department. Applications for approval shall be in the form of an engineering report and shall address priority pollutants and dioxin concentrations. Authorization for land applications must be provided in the special conditions section of this permit or in a separate site-specific permit. 4

6. Agricultural and Silvicultural Sites.
   In addition to specified conditions herein, this permit is subject to the attached Water Quality Guides numbers WQ 422 through 426 published by the University of Missouri, and herby incorporated as though fully set forth herein. The guide topics are as follows:
   - WQ 422 Land Application of Septage
   - WQ 423 Monitoring Requirements for Biosolids Land Application
   - WQ 424 Biosolids Standards for Pathogens and Vectors
   - WQ 425 Biosolids Standards for Metals and Other Trace Substances
   - WQ 426 Best Management Practices for Biosolids Land Applications

SECTION I – CLOSURE REQUIREMENTS

1. This section applies to all wastewater treatment facilities (mechanical and lagoons) and sludge or biosolids storage and treatment facilities and incineration ash ponds. It does not apply to land application sites.
2. Permittees who plan to cease operation must obtain Department approval of a closure plan which addresses proper removal and disposal of all residues, including sludge, biosolids, and ash. Permittee must maintain this permit until the facility is properly closed per 10 CSR 20-6.010 and 10 CSR 20-6.015.
3. Residuals that are left in place during closure of a lagoon or earthen structure shall not exceed the agricultural loading rates as follows:
   a. Residuals shall meet the monitoring and land application limits for agricultural rates as referenced in Section H of these standard conditions.
   b. If a wastewater treatment lagoon has been in operation for 15 years or more, the sludge in the lagoon qualifies for Class B with respect to pathogens (see WQ 424, Table 3), and testing for fecal coliform is not required. For other lagoons, testing for fecal coliform is required to show compliance with Class B limitations. Se WQ 423 and 424.
   c. The allowable nitrogen loading that may be left in the lagoon shall be based on the plant available nitrogen (PAN) loading. See WQ 426 for calculation procedures. For a grass cover crop, the allowable PAN is 300 pounds/acre.
4. When closing a wastewater treatment lagoon with a design treatment capacity equal or less than 150 persons, the residuals are considered “septage” under the similar treatment works” definition. See WQ 422. Under the septage category, residuals may be left in place as follows:
   a. Testing for metals or fecal coliform is not required.
   b. If the wastewater treatment lagoon has been in use for less than 15 years, mix lime with the sludge at the rate of 50 pounds of hydrated lime per 1000 gallons (134 cubic feet) of sludge.
   c. The amount of sludge that may be left in the lagoon shall be based on the plan available nitrogen (PAN) loading. 100 dry tons/acre of sludge may be left in the basin without testing for nitrogen. If more than 100 dry tons/acre will be left in the lagoon, test for nitrogen and determine the PAN in accordance with WQ 426. Allowable PAN loading is 300 pounds/acre.
5. Residuals left within the lagoon shall be mixed with soil on at least a 1 to 1 ratio, the lagoon berms shall be demolished, and the site shall be graded and vegetated so as to avoid ponding of storm water and provide adequate surface water drainage without creating erosion.
6. Lagoon closure activities shall obtain a storm water permit for land disturbance activities that equal or exceed five acres in accordance with 10 CSR 20-6.200.
7. If sludge exceeds agricultural loading rates under Section H or I, a landfill permit or solid waste disposal permit shall be obtained to authorize on-site sludge disposal under the Missouri Solid Waste Management Law and regulations per 10 CSR 80, and the permittee must comply with the surface disposal requirements under 40 CFR 503, Subpart C.

SECTION J – MONITORING FREQUENCY

1. At a minimum, sludge or biosolids shall be tested for volume and percent total solids on a frequency that will accurately represent sludge quantities produced and disposed.
2. Testing for land application is listed under Section H, Subsection 6 of these standard conditions (see WQ 423). Once per year is the minimum test frequency. Additional testing shall be performed for each 100 dry tons of sludge generated or stored during the year.
3. Additional testing may be required in the special conditions or other sections of the permit. Permittees receiving industrial wastewater may be required to conduct additional testing upon request from the Department.
4. Monitoring requirements shall be performed in accordance with, “POTW Sludge Sampling and Analysis Guidance Document”, United States Environmental Protection Agency, August 1989, and subsequent revisions.

SECTION K – RECORD KEEPING AND REPORTING REQUIREMENTS

1. The permittee shall maintain records on file at the facility for at least five years for the items listed in these Standard Conditions and any additional items in the Special Conditions section of this permit. This shall include dates when the sludge facility is checked for proper operation, records of maintenance and repairs and other relevant information.
2. Reporting Period
   a. By January 28th of each year, an annual report shall be submitted for the previous calendar year period for all mechanical wastewater treatment facilities, sludge lagoons, and sludge or biosolids disposal facilities.
   b. Permittees with wastewater treatment lagoons shall submit the above annual report only when sludge or biosolids are removed from the lagoon during the report period or when the lagoon is closed.
3. Report Forms. The annual report shall be submitted on report forms provided by the Department or equivalent forms approved by the Department.
4. Report shall be submitted as follows:
   Major facilities (those serving 10,000 persons or 1 million gallons per day) shall report to both the Department and EPA. Other facilities need to report only to the Department. Reports shall be submitted to the addresses listed as follows:

   DNR regional office listed in your permit
   (See cover letter of permit)

   EPA Region VII
   Water Compliance Branch (WACM)
   Sludge Coordinator
   901 N 5th Street
   Kansas City, KS 66101

5. Annual Report Contents. The annual report shall include the following:
   a. Sludge/biosolids testing performed. Include a copy or summary of all test results, even if not required by this permit.
   b. Sludge or Biosolids quantity shall be reported as dry tons for quantity generated by the wastewater treatment facility, the quantity stored on site at end of year, and the quantity used or disposed.
   c. Gallons and % solids data used to calculate the dry ton amounts.
   d. Description of any unusual operating conditions.
   e. Final disposal method, dates, and location, and person responsible for hauling and disposal.
      (1) This must include the name, address and permit number for the hauler and the sludge facility. If hauled to a municipal wastewater treatment facility, sanitary landfill, or other approved treatment facility, give the name and permit number of that facility.
      (2) Include a description of the type of hauling equipment used and the capacity in tons, gallons, or cubic feet.
   f. Contract Hauler Activities.
      If contract hauler, provide a copy of a signed contract or billing receipts from the contractor. Permittee shall require the contractor to supply information required under this permit for which the contractor is responsible. The permittee shall submit a signed statement from the contractor that he has complied with the standards contained in this permit, unless the contract hauler has a separate sludge disposal or biosolids use permit.
   g. Land Application Sites.
      (1) Report the location of each application site, the annual and cumulative dry tons/acre for each site, and the landowners name and address. The location for each spreading site shall be given as legal description for nearest ¼, ¼, Section, Township, Range, and County, or as latitude and longitude.
      (2) If biosolids application exceeds 2 dry tons/acre/year, report biosolids nitrogen results. Plant Available Nitrogen (PAN) in pounds/acre, crop nitrogen requirement, available nitrogen in the soil prior to biosolids application, and PAN calculations for each site.
      (3) If the "Low Metals" criteria is exceeded, report the annual and cumulative pollutant loading rates in pounds per acre for each applicable pollutant, and report the percent of cumulative loading which has been reached at each site.
      (4) Report the method used for compliance with pathogen and vector attraction requirements.
      (5) Report soil test results for pH, CEC, and phosphorus. If none was tested during the year, report the last date when tested and results.

STANDARD CONDITIONS FOR NPDES PERMITS
ISSUED BY
THE MISSOURI DEPARTMENT OF NATURAL RESOURCES
MISSOURI CLEAN WATER COMMISSION
REVISED
NOVEMBER 1, 2013

These Standard Conditions incorporate permit conditions as required by 40 CFR 122.41 or other applicable state statutes or regulations. These minimum conditions apply unless superseded by requirements specified in the permit.

Part I – General Conditions
Section A – Sampling, Monitoring, and Recording

1. **Sampling Requirements.**
   a. Samples and measurements taken for the purpose of monitoring shall be representative of the monitored activity.
   b. All samples shall be taken at the outfall(s) or Missouri Department of Natural Resources (Department) approved sampling location(s), and unless specified, before the effluent joins or is diluted by any other body of water or substance.

2. **Monitoring Requirements**.
   a. Records of monitoring information shall include:
      i. The date, exact place, and time of sampling or measurements;
      ii. The individual(s) who performed the sampling or measurements;
      iii. The date(s) analyses were performed;
      iv. The individual(s) who performed the analyses;
      v. The analytical techniques or methods used; and
      vi. The results of such analyses.
   b. If the permittee monitors any pollutant more frequently than required by the permit at the location specified in the permit using test procedures approved under 40 CFR Part 136, or another method required for an industry-specific waste stream under 40 CFR subchapters N or O, the results of such monitoring shall be included in the calculation and reported to the Department with the discharge monitoring report data (DMR) submitted to the Department pursuant to Section B, paragraph 7.

3. **Sample and Monitoring Calculations.** Calculations for all sample and monitoring results which require averaging of measurements shall utilize an arithmetic mean unless otherwise specified in the permit.

4. **Test Procedures**. The analytical and sampling methods used shall conform to the reference methods listed in 10 CSR 20-7.015 unless alternates are approved by the Department. The facility shall use sufficiently sensitive analytical methods for detecting, identifying, and measuring the concentrations of pollutants. The facility shall ensure that the selected methods are able to quantify the presence of pollutants in a given discharge at concentrations that are low enough to determine compliance with Water Quality Standards in 10 CSR 20-7.031 or effluent limitations unless provisions in the permit allow for other alternatives. A method is "sufficiently sensitive" when; 1) the method minimum level is at or below the level of the applicable water quality criterion for the pollutant or, 2) the method minimum level is above the applicable water quality criterion, but the amount of pollutant in a facility's discharge is high enough that the method detects and quantifies the level of pollutant in the discharge, or 3) the method has the lowest minimum level of the analytical methods approved under 10 CSR 20-7.015. These methods are also required for parameters that are listed as monitoring only, as the data collected may be used to determine if limitations need to be established. A permittee is responsible for working with their contractors to ensure that the analysis performed is sufficiently sensitive.

5. **Record Retention.** Except for records of monitoring information required by the permit related to the permittee's sewage sludge use and disposal activities, which shall be retained for a period of at least five (5) years (or longer as required by 40 CFR part 503), the permittee shall retain records of all monitoring information, including all calibration and maintenance records and all original strip chart recordings for continuous monitoring instrumentation, copies of all reports required by the permit, and records of all data used to complete the application for the permit, for a period of at least three (3) years from the date of the sample, measurement, report or application. This period may be extended by request of the Department at any time.

6. **Illegal Activities.**
   a. The Federal Clean Water Act provides that any person who falsifies, tampers with, or knowingly renders inaccurate any monitoring device or method required to be maintained under the permit shall, upon conviction, be punished by a fine of not more than $10,000, or by imprisonment for not more than two (2) years, or both. If a conviction of a person is for a violation committed after a first conviction of such person under this paragraph, punishment is a fine of not more than $20,000 per day of violation, or by imprisonment of not more than four (4) years, or both.
   b. The Missouri Clean Water Law provides that any person or who falsifies, tampers with, or knowingly renders inaccurate any monitoring device or method required to be maintained pursuant to sections 644.006 to 644.141 shall, upon conviction, be punished by a fine of not more than $10,000, or by imprisonment for not more than six (6) months, or by both. Second and successive convictions for violation under this paragraph by any person shall be punished by a fine of not more than $50,000 per day of violation, or by imprisonment for not more than two (2) years, or both.

Section B – Reporting Requirements

1. **Planned Changes.**
   a. The permittee shall give notice to the Department as soon as possible of any planned physical alterations or additions to the permitted facility when:
      i. The alteration or addition to a permitted facility may meet one of the criteria for determining whether a facility is a new source in 40 CFR 122.29(b); or
      ii. The alteration or addition could significantly change the nature or increase the quantity of pollutants discharged. This notification applies to pollutants which are subject neither to effluent limitations in the permit, nor to notification requirements under 40 CFR 122.42(a)(1);
      iii. The alteration or addition results in a significant change in the permittee's sludge use or disposal practices, and such alteration, addition, or change may justify the application of permit conditions that are different from or absent in the existing permit, including notification of additional use or disposal sites not reported during the permit application process or not reported pursuant to an approved land application plan;
      iv. Any facility expansions, production increases, or process modifications which will result in a new or substantially different discharge or sludge characteristics must be reported to the Department 60 days before the facility or process modification begins. Notification may be accomplished by application for a new permit. If the discharge does not violate effluent limitations specified in the permit, the facility is to submit a notice to the Department of the changed discharge at least 30 days before such changes. The Department may require a construction permit and/or permit modification as a result of the proposed changes at the facility.

2. **Twenty-Four Hour Reporting.**
   a. The permittee shall report any noncompliance which may endanger health or the environment. Relevant information shall be provided orally or via the current electronic method approved by the Department, within 24 hours from the time the permittee becomes aware of the circumstances, and shall be reported to the appropriate Regional Office during normal business hours or the Environmental Emergency Response hotline at 573-634-2436 outside of normal business hours. A written submission shall also be provided within five (5) business days of the time the permittee becomes aware of the circumstances. The written submission shall contain a description of the noncompliance and its cause; the period of noncompliance, including exact dates and times, and if the noncompliance has not been corrected, the anticipated time it is expected to continue; and steps taken or planned to reduce, eliminate, and prevent reoccurrence of the noncompliance.

b. The following shall be included as information which must be reported within 24 hours under this paragraph.
   i. Any unanticipated bypass which exceeds any effluent limitation in the permit.
   ii. Any upset which exceeds any effluent limitation in the permit.
   iii. Violation of a maximum daily discharge limitation for any of the pollutants listed by the Department in the permit required to be reported within 24 hours.

c. The Department may waive the written report on a case-by-case basis for reports under paragraph 2. b. of this section if the oral report has been received within 24 hours.

3. **Sanitary Sewer Overflow Reporting.** The following requirements solely reflect reporting obligations, and reporting does not necessarily reflect noncompliance, which may depend on the circumstances of the incident reported.
   a. Twenty-Four Hour (24-Hour) Reporting. The permittee or owner shall report any incident in which wastewater escapes the collection system such that it reaches waters of the state or it may pose an imminent or substantial endangerment to the health or welfare of persons. Relevant information shall be provided orally or via the current electronic method approved by the Department within 24 hours from the time the permittee becomes aware of the incident. A written submission shall also be provided within five (5) business days of the time the permittee or owner becomes aware of the incident. The Department may waive the written report on a case-by-case basis if the oral report has been received within 24 hours. The five (5) day reports may be provided via the current electronic method approved by the Department.
   b. Incidents Reported via Discharge Monitoring Reports (DMRs). The permittee or owner shall report any event in which wastewater escapes the collection system, which does not enter waters of the state and is not expected to pose an imminent or substantial endangerment to the health or welfare of persons, which occur typically during wet weather events. Relevant information shall be provided with the permittee's or owner's DMRs.

4. **Anticipated Noncompliance**. The permittee shall give advance notice to the Department of any planned changes in the permitted facility or activity which may result in noncompliance with permit requirements. The notice shall be submitted to the Department 60 days prior to such changes or activity.

5. **Compliance Schedules.** Reports of compliance or noncompliance with, or any progress reports on, interim and final requirements contained in any compliance schedule of the permit shall be submitted no later than 14 days following each schedule date. The report shall provide an explanation for the instance of noncompliance and a proposed schedule or anticipated date, for achieving compliance with the compliance schedule requirement.

6. **Other Noncompliance.** The permittee shall report all instances of noncompliance not reported under paragraphs 2, 3, 4, and 7 of this section, at the time monitoring reports are submitted. The reports shall contain the information listed in paragraph 2. a. of this section.

7. **Other Information**. Where the permittee becomes aware that it failed to submit any relevant facts in a permit application, or submitted incorrect information in a permit application or in any report to the Department, it shall promptly submit such facts or information.

8. **Discharge Monitoring Reports.**
   a. Monitoring results shall be reported at the intervals specified in the permit.
   b. Monitoring results must be reported to the Department via the current method approved by the Department, unless the permittee has been granted a waiver from using the method. If the permittee has been granted a waiver, the permittee must use forms provided by the Department.
   c. Monitoring results shall be reported to the Department no later than the 28th day of the month following the end of the reporting period.

Section C – Bypass/Upset Requirements

1. **Definitions.**
   a. *Bypass*: the intentional diversion of waste streams from any portion of a treatment facility.
   b. *Severe Property Damage*: substantial physical damage to property, damage to the treatment facilities which causes them to become inoperable, or substantial and permanent loss of natural resources which can reasonably be expected to occur in the absence of a bypass. Severe property damage does not mean economic loss caused by delays in production.
   c. *Upset*: an exceptional incident in which there is unintentional and temporary noncompliance with technology based permit effluent limitations because of factors beyond the reasonable control of the permittee. An upset does not include noncompliance to the extent caused by operational error, improperly designed treatment facilities, inadequate treatment facilities, lack of preventive maintenance, or careless or improper operation.

2. **Bypass Requirements.**
   a. Bypass not exceeding limitations. The permittee may allow any bypass to occur which does not cause effluent limitations to be exceeded, but only if it also is for essential maintenance to assure efficient operation. These bypasses are not subject to the provisions of paragraphs 2. b. and 2. c. of this section.
   b. Notice.
      i. Anticipated bypass. If the permittee knows in advance of the need for a bypass, it shall submit prior notice, if possible at least 10 days before the date of the bypass.
      ii. Unanticipated bypass. The permittee shall submit notice of an unanticipated bypass as required in Section B – Reporting Requirements, paragraph 5 (24-hour notice).
   c. Prohibition of bypass.
      i. Bypass is prohibited, and the Department may take enforcement action against a permittee for bypass, unless:
         1. Bypass was unavoidable to prevent loss of life, personal injury, or severe property damage;
         2. There were no feasible alternatives to the bypass, such as the use of auxiliary treatment facilities, retention of untreated wastes, or maintenance during normal periods of equipment downtime. This condition is not satisfied if adequate back-up equipment should have been installed in the exercise of reasonable engineering judgment to prevent a bypass which occurred during normal periods of equipment downtime or preventive maintenance; and
         3. The permittee submitted notices as required under paragraph 2. b. of this section.
      ii. The Department may approve an anticipated bypass, after considering its adverse effects, if the Department determines that it will meet the three (3) conditions listed above in paragraph 2. c. i. of this section.

3. **Upset Requirements.**
   a. Effect of an upset. An upset constitutes an affirmative defense to an action brought for noncompliance with such technology based permit effluent limitations if the requirements of paragraph 3. b. of this section are met. No determination made during administrative review of claims that noncompliance was caused by upset, and before an action for noncompliance, is final administrative action subject to judicial review.
   b. Conditions necessary for a demonstration of upset. A permittee who wishes to establish the affirmative defense of upset shall demonstrate, through properly signed, contemporaneous operating logs, or other relevant evidence that:
      i. An upset occurred and that the permittee can identify the cause(s) of the upset;
      ii. The permitted facility was at the time being properly operated; and
      iii. The permittee submitted notice of the upset as required in Section B – Reporting Requirements, paragraph 2. b. ii. (24-hour notice).
      iv. The permittee complied with any remedial measures required under Section D – Administrative Requirements, paragraph 4.
   c. Burden of proof. In any enforcement proceeding, the permittee seeking to establish the occurrence of an upset has the burden of proof.

Section D – Administrative Requirements

1. **Duty to Comply.** The permittee must comply with all conditions of this permit. Any permit noncompliance constitutes a violation of the Missouri Clean Water Law and Federal Clean Water Act and is grounds for enforcement action; for permit termination, revocation and reissuance, or modification; or denial of a permit renewal application.
   a. The permittee shall comply with effluent standards or prohibitions established under section 307(a) of the Federal Clean Water Act for toxic pollutants and with standards for sewage sludge use or disposal established under section 405(d) of the CWA within the time provided in the regulations that establish these standards or prohibitions or standards for sewage sludge use or disposal, even if the permit has not yet been modified to incorporate the requirement.
   b. The Federal Clean Water Act provides that any person who violates section 301, 302, 306, 307, 308, 318 or 405 of the Act, or any permit condition or limitation implementing any such sections in a permit issued under section 402, or any requirement imposed in a pretreatment program approved under sections 402(a)(3) or 402(b)(8) of the Act, is subject to a civil penalty not to exceed $25,000 per day for each violation. The Federal Clean Water Act provides that any person who negligently violates sections 301, 302, 306, 307, 308, 318, or 405 of the Act, or any condition or limitation implementing any of such sections in a permit issued under section 402 of the Act, or any requirement imposed in a pretreatment program approved under section 402(a)(3) or 402(b)(8) of the Act, is subject to criminal penalties of $2,500 to $25,000 per day of violation, or imprisonment of not more than one (1) year, or both. In the case of a second or subsequent conviction for a negligent violation, a person shall be subject to criminal penalties of not more than $50,000 per day of violation, or by imprisonment of not more than two (2) years, or both. Any person who knowingly violates such sections, or such conditions or limitations is subject to criminal penalties of $5,000 to $50,000 per day of violation, or imprisonment for not more than three (3) years, or both. In the case of a second or subsequent conviction for a knowing violation, a person shall be subject to criminal penalties of not more than $100,000 per day of violation, or imprisonment of not more than six (6) years, or both. Any person who knowingly violates section 301, 302, 303, 306, 307, 308, 318 or 405 of the Act, or any permit condition or limitation implementing any of such sections in a permit issued under section 402 of the Act, and who knows at that time that he thereby places another person in imminent danger of death or serious bodily injury, shall, upon conviction, be subject to a fine of not more than $250,000 or imprisonment of not more than 15 years, or both. In the case of a second or subsequent conviction for a knowing endangerment violation, a person shall be subject to a fine of not more than $500,000 or by imprisonment of not more than 30 years, or both. An organization, as defined in section 309(c)(3)(B)(iii) of the CWA, shall, upon conviction of violating the imminent danger provision, be subject to a fine of not more than $1,000,000 and can be fined up to $2,000,000 for second or subsequent convictions.
   c. Any person may be assessed an administrative penalty by the EPA Director for violating section 301, 302, 306, 307, 308, 318 or 405 of this Act, or any permit condition or limitation implementing any of such sections in a permit issued under section 402 of this Act. Administrative penalties for Class I violations are not to exceed $10,000 per violation, with the maximum amount of any Class I penalty assessed not to exceed $25,000. Penalties for Class II violations are not to exceed $10,000 per day for each day during which the violation continues, with the maximum amount of any Class II penalty not to exceed $125,000.
   d. It is unlawful for any person to cause or permit any discharge of water contaminants from any water contaminant or point source located in Missouri in violation of sections 644.006 to 644.141 of the Missouri Clean Water Law, or any standard, rule or regulation promulgated by the commission. In the event the commission or the director determines that any provision of sections 644.006 to 644.141 of the Missouri Clean Water Law or standard, rules, limitations or regulations promulgated pursuant thereto, or permits issued by, or any final abatement order, other order, or determination made by the commission or the director, or any filing requirement pursuant to sections 644.006 to 644.141 of the Missouri Clean Water Law or any other provision which this state is required to enforce pursuant to any federal water pollution control act, is being, was, or is in imminent danger of being violated, the commission or director may cause to have instituted a civil action in any court of competent jurisdiction for the injunctive relief to prevent any such violation or further violation or for the assessment of a penalty not to exceed $10,000 per day for each day, or part thereof, the violation occurred and continues to occur, or both, as the court deems proper. Any person who willfully or negligently commits any violation in this paragraph shall, upon conviction, be punished by a fine of not less than $2,500 nor more than $25,000 per day of violation, or by imprisonment for not more than one year, or both. Second and successive convictions for violation of the same provision of this paragraph by any person shall be punished by a fine of not more than $50,000 per day of violation, or by imprisonment for not more than two (2) years, or both.

2. **Duty to Reapply.**
   a. If the permittee wishes to continue an activity regulated by this permit after the expiration date of this permit, the permittee must apply for and obtain a new permit.
   b. A permittee with a currently effective site-specific permit shall submit an application for renewal at least 180 days before the expiration date of the existing permit, unless permission for a later date has been granted by the Department. (The Department shall not grant permission for applications to be submitted later than the expiration date of the existing permit.)
   c. A permittees with currently effective general permit shall submit an application for renewal at least 30 days before the existing permit expires, unless the permittee has been notified by the Department that an earlier application must be made. The Department may grant permission for a later submission date. (The Department shall not grant permission for applications to be submitted later than the expiration date of the existing permit.)

3. **Need to Halt or Reduce Activity Not a Defense.** It shall not be a defense for a permittee in an enforcement action that it would have been necessary to halt or reduce the permitted activity in order to maintain compliance with the conditions of this permit.

4. **Duty to Mitigate.** The permittee shall take all reasonable steps to minimize or prevent any discharge or sludge use or disposal in violation of this permit which has a reasonable likelihood of adversely affecting human health or the environment.

5. **Proper Operation and Maintenance**. The permittee shall at all times properly operate and maintain all facilities and systems of treatment and control (and related appurtenances) which are installed or used by the permittee to achieve compliance with the conditions of this permit. Proper operation and maintenance also includes adequate laboratory controls and appropriate quality assurance procedures. This provision requires the operation of back-up or auxiliary facilities or similar systems which are installed by a permittee only when the operation is necessary to achieve compliance with the conditions of the permit.

6. **Permit Actions.**
   a. Subject to compliance with statutory requirements of the Law and Regulations and applicable Court Order, this permit may be modified, suspended, or revoked in whole or in part during its term for cause including, but not limited to, the following:
      i. Violations of any terms or conditions of this permit or the law;
      ii. Having obtained this permit by misrepresentation or failure to disclose fully any relevant facts;
      iii. A change in any circumstances or conditions that requires either a temporary or permanent reduction or elimination of the authorized discharge; or
      iv. Any reason set forth in the Law or Regulations.
   b. The filing of a request by the permittee for a permit modification, revocation and reissuance, or termination, or a notification of planned changes or anticipated noncompliance does not stay any permit condition.

7. **Permit Transfer.**
   a. Subject to 10 CSR 20-6.010, an operating permit may be transferred upon submission to the Department of an application to transfer signed by the existing owner and the new owner, unless prohibited by the terms of the permit. Until such time the permit is officially transferred, the original permittee remains responsible for complying with the terms and conditions of the existing permit.
   b. The Department may require modification or revocation and reissuance of the permit to change the name of the permittee and incorporate such other requirements as may be necessary under the Missouri Clean Water Law or the Federal Clean Water Act.
   c. The Department, within 30 days of receipt of the application, shall notify the new permittee of its intent to revoke or reissue or transfer the permit.

8. **Toxic Pollutants.** The permittee shall comply with effluent standards or prohibitions established under section 307(a) of the Federal Clean Water Act for toxic pollutants and with standards for sewage sludge use or disposal established under section 405(d) of the Federal Clean Water Act within the time provided in the regulations that establish these standards or prohibitions or standards for sewage sludge use or disposal, even if the permit has not yet been modified to incorporate the requirement.

9. **Property Rights.** This permit does not convey any property rights of any sort, or any exclusive privilege.

10. **Duty to Provide Information.** The permittee shall furnish to the Department, within a reasonable time, any information which the Department may request to determine whether cause exists for modifying, revoking and reissuing, or terminating this permit or to determine compliance with this permit. The permittee shall also furnish to the Department upon request, copies of records required to be kept by this permit.

11. **Inspection and Entry.** The permittee shall allow the Department, or an authorized representative (including an authorized contractor acting as a representative of the Department), upon presentation of credentials and other documents as may be required by law, to:
   a. Enter upon the permittee's premises where a regulated facility or activity is located or conducted, or where records must be kept under the conditions of the permit;
   b. Have access to and copy, at reasonable times, any records that must be kept under the conditions of this permit;
   c. Inspect at reasonable times any facilities, equipment (including monitoring and control equipment), practices, or operations regulated or required under this permit; and
   d. Sample or monitor at reasonable times, for the purposes of assuring permit compliance or as otherwise authorized by the Federal Clean Water Act or Missouri Clean Water Law, any substances or parameters at any location.

12. **Closure of Treatment Facilities.**
   a. Persons who cease operation or plan to cease operation of waste, wastewater, and sludge handling and treatment facilities shall close the facilities in accordance with a closure plan approved by the Department.
   b. Operating Permits under 10 CSR 20-6.010 or under 10 CSR 20-6.015 are required until all waste, wastewater, and sludges have been disposed of in accordance with the closure plan approved by the Department and any disturbed areas have been properly stabilized. Disturbed areas will be considered stabilized when perennial vegetation, pavement, or structures using permanent materials cover all areas that have been disturbed. Vegetative cover, if used, shall be at least 70% plant density over 100% of the disturbed area.

13. **Signatory Requirement.**
   a. All permit applications, reports required by the permit, or information requested by the Department shall be signed and certified. (See 40 CFR 122.22 and 10 CSR 20-6.010)
   b. The Federal Clean Water Act provides that any person who knowingly makes any false statement, representation, or certification in any record or other document submitted or required to be maintained under this permit, including monitoring reports or reports of compliance or non-compliance shall, upon conviction, be punished by a fine of not more than $10,000 per violation, or by imprisonment for not more than six (6) months per violation, or by both.
   c. The Missouri Clean Water Law provides that any person who knowingly makes any false statement, representation or certification in any application, record, report, plan, or other document filed or required to be maintained pursuant to sections 644.006 to 644.141 shall, upon conviction, be punished by a fine of not more than ten thousand dollars, or by imprisonment for not more than six months, or by both.

14. **Severability.** The provisions of the permit are severable, and if any provision of the permit, or the application of any provision of the permit to any circumstance, is held invalid, the application of such provision to other circumstances, and the remainder of the permit, shall not be affected thereby.

STANDARD CONDITIONS FOR NPDES PERMITS
ISSUED BY
THE MISSOURI DEPARTMENT OF NATURAL RESOURCES
MISSOURI CLEAN WATER COMMISSION
AUGUST 15, 1994

PART III – SLUDGE & BIOSOLIDS FROM DOMESTIC WASTEWATER TREATMENT FACILITIES

SECTION A – GENERAL REQUIREMENTS

1. This permit pertains to sludge requirements under the Missouri Clean Water Law and regulation and incorporates applicable federal sludge disposal requirements under 40 CFR 503. The Environmental Protection Agency (EPA) has principal authority for permitting and enforcement of the federal sludge regulations under 40 CFS 503 until such time as Missouri is delegated the new EPA sludge program. EPA has reviewed and accepted these standard sludge conditions. EPA may choose to issue a separate sludge addendum to this permit or a separate federal sludge permit at their discretion to further address federal requirements.
2. These PART III Standard Conditions apply only to sludge and biosolids generated at domestic wastewater treatment facilities, including public owned treatment works (POTW) and privately owned facilities.
3. Sludge and Biosolids Use and Disposal Practices.
   a. Permittee is authorized to operate the sludge and biosolids treatment, storage, use, and disposal facilities listed in the facility description of this permit.
   b. Permittee shall not exceed the design sludge volume listed in the facility description and shall not use sludge disposal methods that are not listed in the facility description, without prior approval of the permitting authority.
   c. Permittee is authorized to operate the storage, treatment or generating sites listed in the Facility Description section of this permit.
   d. A separate operating permit is required for each operating location where sludge or biosolids are generated, stored, treated, or disposed, unless specifically exempted in this permit or in 10 CSR 20, Chapter 6 regulations. For land application, see section H, subsection 3 of these standard conditions.
4. Sludge Received From Other Facilities
   a. Permitees may accept domestic wastewater sludge from other facilities including septic tank pumpings from residential sources as long as the design sludge volume is not exceeded and the treatment facility performance is not impaired.
   b. The permittee shall obtain a signed statement from the sludge generator or hauler that certifies the type and source of the sludge.
   c. Sludge received from out-of-state generators shall receive prior approval of the permitting authority and shall be listed in the facility description or special conditions section of the permit.
5. These permit requirements do not supersede nor remove liability for compliance with county and other local ordinances.
6. These permit requirements do not supersede nor remove liability for compliance with other environmental regulations such as odor emissions under the Missouri Air Pollution Control Law and regulations.
7. This permit may (after du process) be modified, or alternatively revoked and reissued, to comply with any applicable sludge disposal standard or limitation issued or approved under Section 405(d) of the Clean Water Act or under Chapter 644 RsMo.
8. In addition to the STANDARD CONDITIONS, the department may include sludge limitations in the special conditions portion or other sections of this permit.
9. Alternate Limits in Site Specific Permit.
   Where deemed appropriate, the department may require an individual site specific permit in order to authorize alternate limitations:
   a. An individual permit must be obtained for each operating location, including application sites.
   b. To request a site specific permit, an individual permit application, permit fees, and supporting documents shall be submitted for each operating location. This shall include a detailed sludge/biosolids management plan or engineering report.
10. Exceptions to these Standard Conditions may be authorized on a case-by-case basis by the department, as follows:
    a. The department will prepare a permit modification and follow permit public notice provisions as applicable under 10 CSR 20-6.020, 40 CFR 124.10, and 40 CFR 501.15(a)(2)(ix)(E). This includes notification of the owners of property located adjacent to each land application site, where appropriate.
    b. Exceptions cannot be grated where prohibited by the federal sludge regulations under 40 CFR 503.
11. Compliance Period
    Compliance shall be achieved as expeditiously as possible but no later than the compliance dates under 40 CFR 503.2.

SECTION B – DEFINITIONS

1. Biosolids means an organic fertilizer or soil amendment produced by the treatment of domestic wastewater sludge. Untreated sludge or sludge that does not conform to the pollutants and pathogen treatment requirements in this permit is not considered biosolids.
2. Biosolids land application facility is a facility where biosolids are spread onto the land at agronomic rates for production of food or fiber. The facility includes any structures necessary to store the biosolids until soil, weather, and crop conditions are favorable for land application.
3. Class A biosolids means a material that has met the Class A pathogen reduction requirements or equivalent treatment by a Process to Further Reduce Pathogens (PFRP) in accordance with 40 CFR 503.
4. Class B biosolids means a material that has met the Class B pathogen reduction requirements or equivalent treatment by a Process to Significantly Reduce Pathogens (PFRP) in accordance with 40 CFR 503.
5. Domestic wastewater means wastewater originating from the sanitary conveniences of residences, commercial buildings, factories and institutions; or co-mingled sanitary and industrial wastewater processed by a public owned treatment works (POTW) or privately owned facility.
6. Mechanical treatment plants are wastewater treatment facilities that use mechanical devices to treat wastewater, including septic tanks, extended aeration, activated sludge, contact stabilization, trickling filters, rotating biological discs, and other similar facilities. It does not include unaerated wastewater treatment lagoons and constructed wetlands for wastewater treatment.
7. Operating location as defined in 10 CSR 20-2.010 is all contiguous lands owned, operated or controlled by one (1) person or by two (2) or more persons jointly or as tenants in common.
8. Plant Available Nitrogen (PAN) is the nitrogen that will be available to plants during the next growing season after biosolids application.
9. Sinkhole is a depression in the land surface into which surface water flows to join an underground drainage system.
10. Site Specific Permit is a permit that has alternate limits developed to address specific site conditions for each land application site or storage site.
11. Sludge is the solid, semisolid, or liquid residue removed during the treatment of wastewater. Sludge includes septage removed from septic tanks.
12. Sludge lagoon is an earthen basin that receives sludge that has been removed from a wastewater treatment facility. It does not include a wastewater treatment lagoon or sludge treatment units that are not a part of a mechanical wastewater treatment facility.
13. Wetlands are those areas that are inundated or saturated by surface or groundwater at a frequency and duration sufficient to support, and that under normal circumstances do support, a prevalence of vegetation typically adapted for life in saturated soil conditions. Wetlands generally include swamp, marshes, bogs, and similar areas. Wetlands do not include constructed wetlands used for wastewater treatment.

SECTION C – MECHANICAL WASTEWATER TREATMENT FACILITIES

1. Sludge shall be routinely removed from the wastewater treatment facilities and handled according to the permit facility description and sludge conditions in this permit.
2. The permittee shall operate the facility so that there is no sludge loss into the discharged effluent in excess of permit limits, no sludge bypassing, and no discharge of sludge to waters of the state.
3. Mechanical treatment plants shall have separate sludge storage compartments in accordance with 10 CSR 20, Chapter 8. Failure to remove sludge from these storage compartments on the required design schedule is a violation of this permit.

SECTION D – SLUDGE DISPOSED AT OTHER TREATMENT FACILITY OR CONTRACT HAULER

1. This section applies to permittees that haul sludge to another treatment facility for disposal or use contract haulers to remove and dispose of sludge.
2. Permittees that use contract haulers are responsible for compliance with all the terms of this permit including final disposal, unless the hauler has a separate permit for sludge or biosolids disposal issued by the department; or the hauler transports the sludge to another permitted treatment facility.
3. The permittee shall require documentation from the contractor of the disposal methods used and permits obtained by the contractor.
4. Testing of sludge, other than total solids content, is not required if sludge is hauled to a municipal wastewater treatment facility or other permitted wastewater treatment facility.

SECTION E – WASTEWATER TREATMENT LAGOONS AND STORMWATER RETENTION BASINS

1. Sludge that is retained within a wastewater treatment lagoon is subject to sludge disposal requirements when the sludge is removed from the lagoon or when the lagoon ceases to receive and treat wastewater.
2. If sludge is removed during the year, an annual sludge report must be submitted.
3. Storm water retention basins or other earthen basins, which have been used as sludge storage for a mechanical treatment system is considered a sludge lagoon and must comply with Section G of this permit.

SECTION F – INCINERATION OF SLUDGE

1. Sludge incineration facilities shall comply with the requirements of 40 CFR 503 Subpart E; air pollution control regulations under 10 CSR 10; and solid waste management regulations under 10 CSR 80.
2. Permittee may be authorized under the facility description of this permit to store incineration ash in lagoons or ash ponds. This permit does not authorize the disposal of incineration ash. Incineration ash shall be disposed in accordance with 10 CSR 80; or if the ash is determined to be hazardous waste, shall be disposed in accordance with 10 CSR 25.
3. In addition to normal sludge monitoring, incineration facilities shall report the following as part of the annual report, quantity of sludge incinerated, quantity of ash generated, quantity of ash stored; and ash use or disposal method, quantity, and location. Permittee shall also provide the name of the disposal facility and the applicable permit number.
4. Additional limitations, monitoring, and reporting requirements may be addressed in the Special Conditions sections of this permit.

SECTION G – SURFACE DISPOSAL SITES AND SLUDGE LAGOONS

1. Surface disposal sites shall comply with the requirements in 40 CFR 503 Subpart C, and solid waste disposal regulations under 10 CSR 80.
2. Additional limitations, monitoring, and reporting requirements may be addressed in the Special Conditions section of this permit.
3. Effective February 19, 1995, a sludge lagoon that has been in use for more than two years without removal of accumulated sludge, or that has not been properly closed shall comply with one of the following options:
   a. Permittee shall obtain a site specific permit to address surface disposal requirements under 40 CFR 503, ground water quality regulations under 10 CSR 20, Chapter 7 and 8, and solid waste management regulations under 10 CSR 80;
   b. Permittee shall clean out the sludge lagoon to remove any sludge over two years old and shall continue to remove accumulated sludge at least every two years or an alternate schedule approved under 40 CFR 503.20(b). In order to avoid damage to the lagoon seal during cleaning, the permittee may leave a layer of sludge on the bottom of the lagoon, upon prior approval of the department; or
   c. Permittee shall close the lagoon in accordance with Section 1.

SECTION H – LAND APPLICATION

1. The permittee shall not land apply sludge or biosolids unless land application is authorized in the Facility Description or special conditions section of the permit.
2. This permit replaces and terminates all previous sludge management plan approvals by the department for land application of sludge or biosolids.
3. Land application sites within a 20 mile radius of the wastewater treatment facility are authorized under this permit when biosolids are applied for beneficial use in accordance with these standard conditions unless a site specific permit is required under Section A, Subsection 9.
4. Biosolids shall not be applied unless authorized in this permit or exempted under 10 CSR 20, Chapter 6.
   a. This permit does not authorize the land application of sludge except when sludge meets the definition of biosolids.
   b. This permit authorizes “Class A or B” biosolids derived from domestic wastewater sludges to be land applied onto grass land, crop land, timber land or other similar agricultural or silviculture lands at rates suitable for beneficial use as organic fertilizer and soil conditioner.
5. Public Contact Sites.
   Permittees who wish to apply Class A biosolids to public contact sites must obtain approval from the department. Applications for approval shall be in the form of an engineering report and shall address priority pollutants and dioxin concentrations. Authorization for land applications must be provided in the special conditions section of this permit or in a separate site-specific permit.

6. Agricultural and Silvicultural Sites.
   In addition to specified conditions herein, this permit is subject to the attached Water Quality Guides numbers WQ 422 through 426 published by the University of Missouri, and herby incorporated as though fully set forth herein. The guide topics are as follows:
   - WQ 422 Land Application of Septage
   - WQ 423 Monitoring Requirements for Biosolids Land Application
   - WQ 424 Biosolids Standards for Pathogens and Vectors
   - WQ 425 Biosolids Standards for Metals and Other Trace Substances
   - WQ 426 Best Management Practices for Biosolids Land Applications

SECTION I – CLOSURE REQUIREMENTS

1. This section applies to all wastewater treatment facilities (mechanical and lagoons) and sludge or biosolids storage and treatment facilities and incineration ash ponds. It does not apply to land application sites.
2. Permittees who plan to cease operation must obtain department approval of a closure plan which addresses proper removal and disposal of all residues, including sludge, biosolids, and ash. Permittee must maintain this permit until the facility is properly closed per 10 CSR 20-6.010 and 10 CSR 20-6.015.
3. Residuals that are left in place during closure of a lagoon or earthen structure shall not exceed the agricultural loading rates as follows:
   a. Residuals shall meet the monitoring and land application limits for agricultural rates as referenced in Section H of these standard conditions.
   b. If a wastewater treatment lagoon has been in operation for 15 years or more, the sludge in the lagoon qualifies for Class B with respect to pathogens (see WQ 424, Table 3), and testing for fecal coliform is not required. For other lagoons, testing for fecal coliform is required to show compliance with Class B limitations. Se WQ 423 and 424.
   c. The allowable nitrogen loading that may be left in the lagoon shall be based on the plant available nitrogen (PAN) loading. See WQ 426 for calculation procedures. For a grass cover crop, the allowable PAN is 300 pounds/acre.
4. When closing a wastewater treatment lagoon with a design treatment capacity equal or less than 150 persons, the residuals are considered “septage” under the similar treatment works” definition. See WQ 422. Under the septage category, residuals may be left in place as follows:
   a. Testing for metals or fecal coliform is not required.
   b. If the wastewater treatment lagoon has been in use for less than 15 years, mix lime with the sludge at the rate of 50 pounds of hydrated lime per 1000 gallons (134 cubic feet) of sludge.
   c. The amount of sludge that may be left in the lagoon shall be based on the plan available nitrogen (PAN) loading. 100 dry tons/acre of sludge may be left in the basin without testing for nitrogen. If more than 100 dry tons/acre will be left in the lagoon, test for nitrogen and determine the PAN in accordance with WQ 426. Allowable PAN loading is 300 pounds/acre.
5. Residuals left within the lagoon shall be mixed with soil on at least a 1 to 1 ratio, the lagoon berms shall be demolished, and the site shall be graded and vegetated so as to avoid ponding of storm water and provide adequate surface water drainage without creating erosion.
6. Lagoon closure activities shall obtain a storm water permit for land disturbance activities that equal or exceed five acres in accordance with 10 CSR 20-6.200.
7. If sludge exceeds agricultural loading rates under Section H or I, a landfill permit or solid waste disposal permit shall be obtained to authorize on-site sludge disposal under the Missouri Solid Waste Management Law and regulations per 10 CSR 80, and the permittee must comply with the surface disposal requirements under 40 CFR 503, Subpart C.

SECTION J – MONITORING FREQUENCY

1. At a minimum, sludge or biosolids shall be tested for volume and percent total solids on a frequency that will accurately respresent sludge quantities produced and disposed.
2. Testing for land application is listed under Section H, Subsection 6 of these standard conditions (see WQ 423). Once per year is the minimum test frequency. Additional testing shall be performed for each 100 dry tons of sludge generated or stored during the year.
3. Additional testing may be required in the special conditions or other sections of the permit. Permittees receiving industrial wastewater may be required to conduct additional testing upon request from the department.
4. Monitoring requirements shall be performed in accordance with, “POTW Sludge Sampling and Analysis Guidance Document”, United States Environmental Protection Agency, August 1989, and subsequent revisions.

SECTION K – RECORD KEEPING AND REPORTING REQUIREMENTS

1. The permittee shall maintain records on file at the facility for at least five years for the items listed in these Standard Conditions and any additional items in the Special Conditions section of this permit. This shall include dates when the sludge facility is checked for proper operation, records of maintenance and repairs and other relevant information.
2. Reporting Period
   a. By January 28th of each year, an annual report shall be submitted for the previous calendar year period for all mechanical wastewater treatment facilities, sludge lagoons, and sludge or biosolids disposal facilities.
   b. Permittees with wastewater treatment lagoons shall submit the above annual report only when sludge or biosolids are removed from the lagoon during the report period or when the lagoon is closed.
3. Report Forms. The annual report shall be submitted on report forms provided by the department or equivalent forms approved by the department.
4. Report shall be submitted as follows:
   Major facilities (those serving 10,000 persons or 1 million gallons per day) shall report to both the department and EPA. Other facilities need to report only to the department. Reports shall be submitted to the addresses listed as follows:

   DNR regional office listed in your permit
   (See cover letter of permit)

   EPA Region VII
   Water Compliance Branch (WACM)
   Sludge Coordinator
   901 N 5th Street
   Kansas City, KS 66101

5. Annual Report Contents. The annual report shall include the following:
   a. Sludge/biosolids testing performed. Include a copy or summary of all test results, even if not required by this permit.
   b. Sludge or Biosolids quantity shall be reported as dry tons for quantity generated by the wastewater treatment facility, the quantity stored on site at end of year, and the quantity used or disposed.
   c. Gallons and % solids data used to calculate the dry ton amounts.
   d. Description of any unusual operating conditions.
   e. Final disposal method, dates, and location, and person responsible for hauling and disposal.
      (1) This must include the name, address and permit number for the hauler and the sludge facility. If hauled to a municipal wastewater treatment facility, sanitary landfill, or other approved treatment facility, give the name and permit number of that facility.
      (2) Include a description of the type of hauling equipment used and the capacity in tons, gallons, or cubic feet.
   f. Contract Hauler Activities.
      If contract hauler, provide a copy of a signed contract or billing receipts from the contractor. Permittee shall require the contractor to supply information required under this permit for which the contractor is responsible. The permittee shall submit a signed statement from the contractor that he has complied with the standards contained in this permit, unless the contract hauler has a separate sludge disposal or biosolids use permit.
   g. Land Application Sites.
      (1) Report the location of each application site, the annual and cumulative dry tons/acre for each site, and the landowners name and address. The location for each spreading site shall be given as legal description for nearest ¼, ¼, Section, Township, Range, and County, or as latitude and longitude.
      (2) If biosolids application exceeds 2 dry tons/acre/year, report biosolids nitrogen results. Plant Available Nitrogen (PAN) in pounds/acre, crop nitrogen requirement, available nitrogen in the soil prior to biosolids application, and PAN calculations for each site.
      (3) If the "Low Metals" criteria is exceeded, report the annual and cumulative pollutant loading rates in pounds per acre for each applicable pollutant, and report the percent of cumulative loading which has been reached at each site.
      (4) Report the method used for compliance with pathogen and vector attraction requirements.
      (5) Report soil test results for pH, CEC, and phosphorus. If none was tested during the year, report the last date when tested and results.

RECEIVED

NOV 06 2013

WATER PROTECTION PROGRAM

AP16892

FOR AGENCY USE ONLY	
CHECK NUMBER	
DATE RECEIVED 11/6/13	FEE SUBMITTED 0 85

MISSOURI DEPARTMENT OF NATURAL RESOURCES
WATER PROTECTION PROGRAM
APPLICATION FOR AN OPERATING PERMIT FOR DOMESTIC OR MUNICIPAL WASTEWATER (≤100,000 gallons per day)

PLEASE READ THE ACCOMPANYING INSTRUCTIONS BEFORE COMPLETING THIS FORM

1. THIS APPLICATION IS FOR:

☐ An operating permit for a new (including antidegradation review) or unpermitted facility. Construction Permit # _____

☑ An operating permit renewal: Permit #MO- 0128856 Expiration Date _____

☐ An operating permit modification: Permit #MO- _____ Reason: _____

1.1 Is the appropriate fee included with the application (see instructions for appropriate fee)? ☑ YES ☐ NO

1.2 Is a facility description included with this application (see 7.1)? ☑ YES ☐ NO

2. FACILITY

NAME		TELEPHONE NUMBER WITH AREA CODE	
Clover Hill Estates		(573) 979-5036	
ADDRESS (PHYSICAL)	CITY	STATE	ZIP CODE
County Road 302	Jackson	MO	63755

OUTFALL NUMBER
For multiple outfalls, this is number 1 of 1

Estimated (actual) flow: 21,000 gpd, Design Average Flow: 28,860 gpd, Design Peak Hourly Flow: gph

2.1 Legal description: ¼, ¼, SW ¼, Sec. 32 , T 32n , R 13e County Cape

2.2 UTM Coordinates Easting (X): 3724147 Northing (Y): -8938003

For Universal Transverse Mercator (UTM), Zone 15 North referenced to North American Datum 1983 (NAD83)

2.3 Name of receiving stream: Unnamed Tributary to Goose Creek

3. OWNER

NAME	E-MAIL ADDRESS	TELEPHONE NUMBER WITH AREA CODE	
Clover Hill Estates Homeowners Association	cloverhills_homeowners@yahoo.com	(573) [redacted] 388-1942	
ADDRESS	CITY	STATE	ZIP CODE
P.O. Box 513	Jackson	MO	63755

3.1 Request review of draft permit prior to public notice? ☐ YES ☐ NO

4. CONTINUING AUTHORITY: Permanent organization that will serve as the continuing authority for the operation, maintenance and modernization of the facility.

NAME	E-MAIL ADDRESS	TELEPHONE NUMBER WITH AREA CODE	
Clover Hill Estates Homeowners Association	cloverhills_homeowners@yahoo.com	(573) [redacted] 388-1942	
ADDRESS	CITY	STATE	ZIP CODE
P.O. Box 513	Jackson	MO	63755

5. OPERATOR

NAME	CERTIFICATE NUMBER
E-MAIL ADDRESS	TELEPHONE NUMBER WITH AREA CODE

6. FACILITY CONTACT

NAME	TITLE
Mike Culbreath	President, HOA
E-MAIL ADDRESS	TELEPHONE NUMBER WITH AREA CODE
culbreth4@charter.net	(573) 979-5036

7. DESCRIPTION OF FACILITY

7.1 Describe the facility (attach additional sheet if required) and attach a flow chart showing the influents, treatment facilities and outfalls.

Septic/Recirculating sand filter wastewater treatment facility with a chlorination/dechlorination tank.

7.2 Attach an aerial photograph or USGS topographic map showing the location of the facility and outfall.

7.3 Design flow for this outfall: 28,860 Total design flow for the facility: _____ Actual flow for this outfall: _____

7.4 Number of people presently connected or population equivalent (P.E.): _____ Design P.E.: 377

7.5 Does the facility accept or process leachate from landfills? ☐Yes ☑ No

MO 780-1512 (03/13)

SE
Cape Gir.

11. SLUDGE HANDLING, USE AND DISPOSAL

11.1 Is the sludge a hazardous waste as defined by 10 CSR 25? ☐ Yes ☑ No

Sludge production, including sludge received from others: 2.64 Design Dry Tons/Year _____ Actual Dry Tons/Year

11.3 Capacity of sludge holding structures:

Sludge storage provided: _____ cubic feet; _____ days of storage; _____ average percent solids of sludge;

☐ No sludge storage is provided.

Type of Storage: ☐ Holding tank ☐ Building

☐ Basin ☑ Other (Please describe) Septic Tank

☐ Concrete Pad

Sludge Treatment:

☐ Anaerobic Digester ☐ Lagoon ☐ Composting

☐ Storage Tank ☐ Aerobic Digester ☑ Other (Attach description)

☐ Lime Stabilization ☐ Air or Heat Drying

Sludge Use or Disposal:

☐ Land Application ☐ Surface Disposal (Sludge Disposal Lagoon, Sludge held for more than two years)

☐ Contract Hauler ☐ Incineration

☑ Hauled to Another Treatment Facility ☐ Sludge Retained in Wastewater treatment lagoon

☐ Other _____ Attach explanation sheet.

☐ Solid Waste Landfill

Person responsible for hauling sludge to disposal facility

☑ By Applicant ☐ By Others (complete below)

NAME		E-MAIL ADDRESS	
ADDRESS	CITY	STATE	ZIP CODE
CONTACT PERSON	TELEPHONE NUMBER WITH AREA CODE	PERMIT NO. MO-	

Sludge use or disposal facility

☑ By applicant ☐ By others (Please complete below.)

NAME		E-MAIL ADDRESS	
ADDRESS	CITY	STATE	ZIP CODE
CONTACT PERSON	TELEPHONE NUMBER WITH AREA CODE	PERMIT NO. MO-	

Does the sludge or biosolids disposal comply with federal sludge regulations under 40 CFR 503?

■ Yes ☐ No (Please explain)

12. DOWNSTREAM LANDOWNERS - ATTACH ADDITIONAL SHEETS AS NECESSARY. SEE INSTRUCTIONS.

NAME			
Daniel and Judith Domjan			
ADDRESS	CITY	STATE	ZIP CODE
843 County Road 302	Jackson	MO	63755

13. CERTIFICATION

I certify that I am familiar with the information contained in the application, that to the best of my knowledge and belief such information is true, complete and accurate, and if granted this permit, I agree to abide by the Missouri Clean Water Law and all rules, regulations, orders and decisions, subject to any legitimate appeal available to applicant under the Missouri Clean Water Law.

NAME AND OFFICIAL TITLE (TYPE OR PRINT)	TELEPHONE NUMBER WITH AREA CODE
MIKE CULBRETH CURRENT PRESIDENT, CLOVER HILLS HOA	(573) 979-5036
SIGNATURE	DATE SIGNED
Mike Culbreth	10/26/2013

MO 780-1512 (03/13)

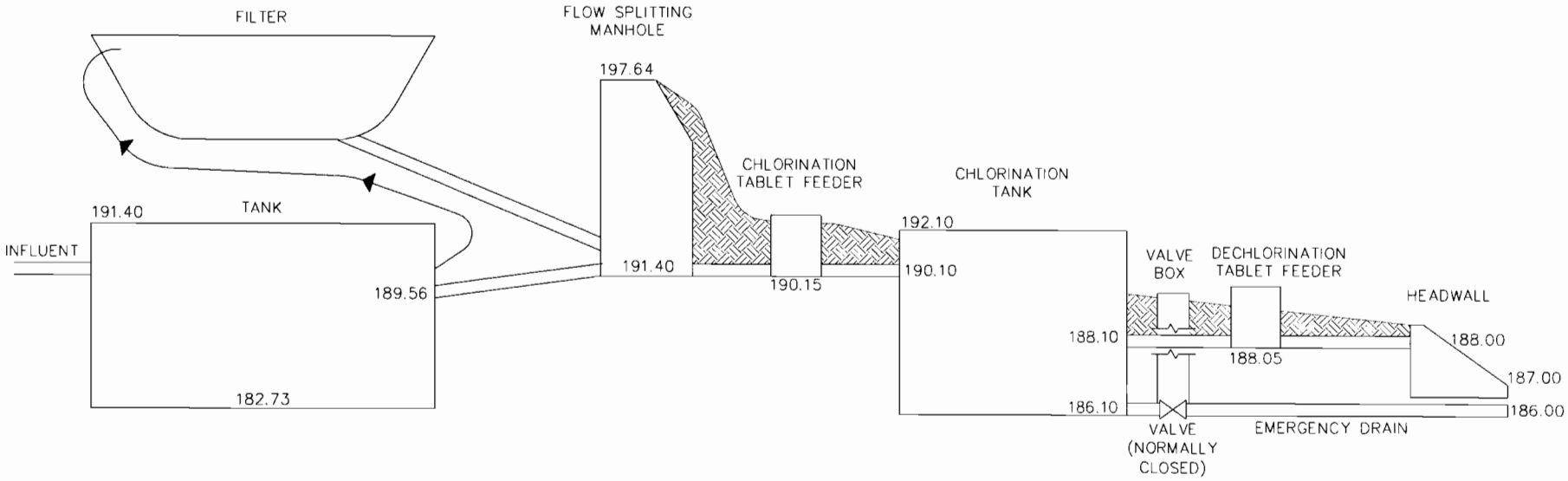

FIGURE 1
CLOVER HILL ESTATES
FLOW DIAGRAM

STRICKLAND ENGINEERING
113 West Main Street
Jackson, Missouri 63755
Tel: 573-243-4080
Fax: 573-243-2191
CIVIL - MECHANICAL - PLUMBING - ELECTRICAL ENGINEERING
LAND SURVEYING