STATE OF MISSOURI

DEPARTMENT OF NATURAL RESOURCES

MISSOURI CLEAN WATER COMMISSION

MISSOURI STATE OPERATING PERMIT

In compliance with the Missouri Clean Water Law, (Chapter 644 R.S. Mo. as amended, hereinafter, the Law), and the Federal Water Pollution Control Act (Public Law 92-500, 92nd Congress) as amended,

Permit No.	MO-0116556
Owner:	Palestine Missionary Baptist Church of Jesus Christ
Address:	3619 East 35th Street, Kansas City, MO 64128
Continuing Authority:	Same as above
Address:	Same as above
Facility Name:	Camp Palestine Wastewater Treatment Facility
Facility Address:	396 SW 730, Chilhowee, MO 64733
Legal Description:	SW ¼, NW ¼, Sec. 32, T45N, R26W, Johnson County
UTM Coordinates:	X=428496, Y=4278820
Receiving Stream:	Tributary to Hogan Fork (C)
First Classified Stream and ID:	8-20-13 MUDD V1.0 (C) (3960)
USGS Basin & Sub-watershed No.:	(10300104-0105)

is authorized to discharge from the facility described herein, in accordance with the effluent limitations and monitoring requirements as set forth herein:

FACILITY DESCRIPTION

Outfall #001 – Camps and Recreational Parks– SIC #7033
Extended aeration/ aerobic digester/ sludge disposal by contract hauler
Design population equivalent is 300.
Design flow is 29,130 gallons per day. Adjusted Design Flow is 4,999 gallons per day.
Actual flow is 439 gallons per day.
Design sludge production is 0.5 dry tons/year.

This permit authorizes only wastewater discharges under the Missouri Clean Water Law and the National Pollutant Discharge Elimination System; it does not apply to other regulated areas. This permit may be appealed in accordance with Section 621.250 RSMo, Section 640.013 RSMo and Section 644.051.6 of the Law.

October 1, 2016
Effective Date

Sara Parker Pauley, Director, Department of Natural Resources

September 30, 2021
Expiration Date

John Madras, Director, Water Protection Program

OUTFALL #001	TABLE A-1. INTERIM EFFLUENT LIMITATIONS AND MONITORING REQUIREMENTS	PAGE NUMBER 2 of 6
		PERMIT NUMBER MO-0116556

The permittee is authorized to discharge from outfall(s) with serial number(s) as specified in the application for this permit. The interim effluent limitations shall become effective on **October 1, 2016** and remain in effect through **December 31, 2016**. Such discharges shall be controlled, limited and monitored by the permittee as specified below:

EFFLUENT PARAMETER(S)	UNITS	INTERIM EFFLUENT LIMITATIONS			MONITORING REQUIREMENTS	
		DAILY MAXIMUM	WEEKLY AVERAGE	MONTHLY AVERAGE	MEASUREMENT FREQUENCY	SAMPLE TYPE
Flow	MGD	*		*	once/month	24 hr. total
Biochemical Oxygen Demand$_5$	mg/L		45	30	once/month	composite**
Total Suspended Solids	mg/L		45	30	once/month	composite**
Ammonia as N	mg/L	*		*	once/month	grab
E. coli (Note 1)	#/100mL	1030		206	once/month	grab

MONITORING REPORTS SHALL BE SUBMITTED MONTHLY; THE FIRST REPORT IS DUE NOVEMBER 28, 2016. THERE SHALL BE NO DISCHARGE OF FLOATING SOLIDS OR VISIBLE FOAM IN OTHER THAN TRACE AMOUNTS.

EFFLUENT PARAMETER(S)	UNITS	MINIMUM		MAXIMUM	MEASUREMENT FREQUENCY	SAMPLE TYPE
pH – Units ***	SU	6.5		9.0	once/month	grab

MONITORING REPORTS SHALL BE SUBMITTED MONTHLY; THE FIRST REPORT IS DUE NOVEMBER 28, 2016.

* Monitoring requirement only.

** A composite sample made up from a minimum of four grab samples collected within a 24 hour period with a minimum of two hours between each grab sample.

*** pH is measured in pH units and is not to be averaged.

Note 1 - Effluent limitations and monitoring requirements for *E. coli* are applicable only during the recreational season from April 1 through October 31. The Monthly Average Limit for *E. coli* is expressed as a geometric mean.

OUTFALL #001	TABLE A-2. FINAL EFFLUENT LIMITATIONS AND MONITORING REQUIREMENTS	PAGE NUMBER 3 of 6
		PERMIT NUMBER MO-0116556

The permittee is authorized to discharge from outfall(s) with serial number(s) as specified in the application for this permit. The final effluent limitations shall become effective on **January 1, 2017** and remain in effect until expiration of the permit. Such discharges shall be controlled, limited and monitored by the permittee as specified below:

EFFLUENT PARAMETER(S)	UNITS	FINAL EFFLUENT LIMITATIONS			MONITORING REQUIREMENTS	
		DAILY MAXIMUM	WEEKLY AVERAGE	MONTHLY AVERAGE	MEASUREMENT FREQUENCY	SAMPLE TYPE
Flow	MGD	*		*	once/month	24 hr. total
Biochemical Oxygen Demand$_5$	mg/L		45	30	once/month	composite**
Total Suspended Solids	mg/L		45	30	once/month	composite**
E. coli (Note 1)	#/100mL	1030		206	once/month	grab
Ammonia as N (Apr 1 – Sep 30) (Oct 1 – Mar 31)	mg/L	 3.6 7.5		 1.4 2.9	once/month	grab

MONITORING REPORTS SHALL BE SUBMITTED MONTHLY; THE FIRST REPORT IS DUE FEBRUARY 28, 2017. THERE SHALL BE NO DISCHARGE OF FLOATING SOLIDS OR VISIBLE FOAM IN OTHER THAN TRACE AMOUNTS.

EFFLUENT PARAMETER(S)	UNITS	MINIMUM		MAXIMUM	MEASUREMENT FREQUENCY	SAMPLE TYPE
pH – Units ***	SU	6.5		9.0	once/month	grab

MONITORING REPORTS SHALL BE SUBMITTED MONTHLY; THE FIRST REPORT IS DUE FEBRUARY 28, 2017.

* Monitoring requirement only.
** A composite sample made up from a minimum of four grab samples collected within a 24 hour period with a minimum of two hours between each grab sample.
*** pH is measured in pH units and is not to be averaged.

Note 1 - Effluent limitations and monitoring requirements for *E. coli* are applicable only during the recreational season from April 1 through October 31. The Monthly Average Limit for *E. coli* is expressed as a geometric mean.

B. STANDARD CONDITIONS

In addition to specified conditions stated herein, this permit is subject to the attached Parts I & III standard conditions dated August 1, 2014 and March 1, 2015, and hereby incorporated as though fully set forth herein.

C. SPECIAL CONDITIONS

1. This permit establishes final ammonia limitations based on Missouri's current Water Quality Standard. On August 22, 2013, the U.S. Environmental Protection Agency (EPA) published a notice in the Federal Register announcing of the final national recommended ambient water quality criteria for protection of aquatic life from the effects of ammonia in freshwater. The EPA's guidance, Final Aquatic Life Ambient Water Quality Criteria for Ammonia – Fresh Water 2013, is not a rule, nor automatically part of a state's water quality standards. States must adopt new ammonia criteria consistent with EPA's published ammonia criteria into their water quality standards that protect the designated uses of the water bodies. The Department of Natural Resources has initiated stakeholder discussions on how to best incorporate these new criteria into the State's rules. A date for when this rule change will occur has not been determined. Also, refer to Section VI of this permit's factsheet for further information including estimated future effluent limits for this facility. It is recommended the permittee view the Department's 2013 EPA criteria Factsheet located at http://dnr.mo.gov/pubs/pub2481.htm.

2. This permit may be reopened and modified, or alternatively revoked and reissued, to:
   (a) Comply with any applicable effluent standard or limitation issued or approved under Sections 301(b)(2)(C) and (D), 304(b)(2), and 307(a) (2) of the Clean Water Act, if the effluent standard or limitation so issued or approved:
      (1) contains different conditions or is otherwise more stringent than any effluent limitation in the permit; or
      (2) controls any pollutant not limited in the permit.
   (b) Incorporate new or modified effluent limitations or other conditions, if the result of a waste load allocation study, toxicity test including acute and chronic Whole Effluent Toxicity (WET) tests, or other information indicates changes are necessary to assure compliance with Missouri's Water Quality Standards.
   (c) Incorporate new or modified effluent limitations or other conditions if, as the result of a watershed analysis, a Total Maximum Daily Load (TMDL) limitation is developed for the receiving waters which are currently included in Missouri's list of waters of the state not fully achieving the state's water quality standards, also called the 303(d) list.
   (d) Incorporate the requirement to develop a pretreatment program pursuant to 40 CFR 403.8(a) when the Director of the Water Protection Program determines that a pretreatment program is necessary due to any new introduction of pollutants into the Publically Owned Treatment Works or any substantial change in the volume or character of pollutants being introduced.

   The permit as modified or reissued under this paragraph shall also contain any other requirements of the Clean Water Act then applicable.

3. All outfalls must be clearly marked in the field.

4. Permittee will cease discharge by connection to a facility with an area-wide management plan per 10 CSR 20-6.010(3)(B) within 90 days of notice of its availability.

5. Water Quality Standards

   (a) To the extent required by law, discharges to waters of the state shall not cause a violation of water quality standards rule under 10 CSR 20-7.031, including both specific and general criteria.
   (b) General Criteria. The following general water quality criteria shall be applicable to all waters of the state at all times including mixing zones. No water contaminant, by itself or in combination with other substances, shall prevent the waters of the state from meeting the following conditions:
      (1) Waters shall be free from substances in sufficient amounts to cause the formation of putrescent, unsightly or harmful bottom deposits or prevent full maintenance of beneficial uses;
      (2) Waters shall be free from oil, scum and floating debris in sufficient amounts to be unsightly or prevent full maintenance of beneficial uses;
      (3) Waters shall be free from substances in sufficient amounts to cause unsightly color or turbidity, offensive odor or prevent full maintenance of beneficial uses;
      (4) Waters shall be free from substances or conditions in sufficient amounts to result in toxicity to human, animal or aquatic life;
      (5) There shall be no significant human health hazard from incidental contact with the water;
      (6) There shall be no acute toxicity to livestock or wildlife watering;
      (7) Waters shall be free from physical, chemical or hydrologic changes that would impair the natural biological community;
      (8) Waters shall be free from used tires, car bodies, appliances, demolition debris, used vehicles or equipment and solid waste as defined in Missouri's Solid Waste Law, section 260.200, RSMo, except as the use of such materials is specifically permitted pursuant to section 260.200-260.247.

C. SPECIAL CONDITIONS (continued)

6. Report as No Discharge when a discharge does not occur during the report period.

7. Reporting of Non-Detects:
   (a) An analysis conducted by the permittee or their contracted laboratory shall be conducted in such a way that the precision and accuracy of the analyzed result can be enumerated.
   (b) The permittee shall not report a sample result as "Non-Detect" without also reporting the detection limit of the test. Reporting as "Non Detect" without also including the detection limit will be considered failure to report, which is a violation of this permit.
   (c) The permittee shall provide the "Non-Detect" sample result using the less than sign and the minimum detection limit (e.g. <10).
   (d) Where the permit contains a Minimum Level (ML) and the permittee is granted authority in the permit to report zero in lieu of the < ML for a specified parameter (conventional, priority pollutants, metals, etc.), then zero (0) is to be reported for that parameter.
   (e) See Standard Conditions Part I, Section A, #4 regarding proper detection limits used for sample analysis.
   (f) When calculating monthly averages, one-half of the minimum detection limit (MDL) should be used instead of a zero. Where all data are below the MDL, the "<MDL" shall be reported as indicated in item (c).

8. It is a violation of the Missouri Clean Water Law to fail to pay fees associated with this permit (644.055 RSMo).

9. Bypasses are not authorized at this facility unless they meet the criteria in 40 CFR 122.41(m). If a bypass occurs, the permittee shall report in accordance to 40 CFR 122.41(m)(3), and with Standard Condition Part I, Section B, subsection 2.b. Bypasses are to be reported to the Kansas City Regional Office during normal business hours or the Environmental Emergency Response hotline at 573-634-2436 outside of normal business hours. Blending, which is the practice of combining a partially-treated wastewater process stream with a fully-treated wastewater process stream prior to discharge, is not considered a form of bypass. If the permittee wishes to utilize blending, the permittee shall file an application to modify this permit to facilitate the inclusion of appropriate monitoring conditions.

10. The facility must be sufficiently secured to restrict entry by children, livestock and unauthorized persons as well as to protect the facility from vandalism.

11. At least one gate must be provided to access the wastewater treatment facility and provide for maintenance and mowing. The gate shall remain locked except when opened by the permittee to perform operational monitoring, sampling, maintenance, mowing, or for inspections by the Department.

12. At least one (1) warning sign shall be placed on each side of the facility enclosure in such positions as to be clearly visible from all directions of approach. There shall also be one (1) sign placed for every five hundred feet (500') (150 m) of the perimeter fence. A sign shall also be placed on each gate. Minimum wording shall be SEWAGE TREATMENT FACILITY—KEEP OUT. Signs shall be made of durable materials with characters at least two inches (2") high and shall be securely fastened to the fence, equipment or other suitable locations.

13. An Operation and Maintenance (O & M) manual shall be maintained by the permittee and made available to the operator. The O & M manual shall include key operating procedures and a brief summary of the operation of the facility.

14. An all-weather access road shall be provided to the treatment facility.

15. The discharge from the wastewater treatment facility shall be conveyed to the receiving stream via a closed pipe or a paved or rip-rapped open channel. Sheet or meandering drainage is not acceptable. The outfall sewer shall be protected against the effects of floodwater, ice or other hazards as to reasonably insure its structural stability and freedom from stoppage. The outfall shall be maintained so that a sample of the effluent can be obtained at a point after the final treatment process and before the discharge mixes with the receiving waters.

16. The permit holder shall maintain the discharges from this facility such that the average flow does not exceed the "Adjusted Design Flow" indicated on the front page of this permit. Average flow (MGD) shall be determined by multiplying actual wastewater flow readings recorded multiplied by a factor of 1.15. The average flow calculated by the facility shall be submitted with the discharge monitoring report in addition to the discharge flow reading. An average flow in excess of the adjusted design flow is a permit violation.

D. SCHEDULE OF COMPLIANCE

The permit for this facility issued on January 1, 2014 included new effluent limitations, and a 3 year schedule to attain compliance with those final effluent limitations. This permit contains the remaining portion of the schedule. Compliance must be achieved by January 1, 2017.

MISSOURI DEPARTMENT OF NATURAL RESOURCES
FACT SHEET
FOR THE PURPOSE OF RENEWAL
OF
MO-0116556
CAMP PALESTINE WWTF

The Federal Water Pollution Control Act ("Clean Water Act" Section 402 Public Law 92-500 as amended) established the National Pollution Discharge Elimination System (NPDES) permit program. This program regulates the discharge of pollutants from point sources into the waters of the United States, and the release of stormwater from certain point sources. All such discharges are unlawful without a permit (Section 301 of the "Clean Water Act"). After a permit is obtained, a discharge not in compliance with all permit terms and conditions is unlawful. Missouri State Operating Permits (MSOPs) are issued by the Director of the Missouri Department of Natural Resources (Department) under an approved program, operating in accordance with federal and state laws (Federal "Clean Water Act" and "Missouri Clean Water Law" Section 644 as amended). MSOPs are issued for a period of five (5) years unless otherwise specified.

As per [40 CFR Part 124.8(a)] and [10 CSR 20-6.020(1)2.] a Factsheet shall be prepared to give pertinent information regarding the applicable regulations, rationale for the development of effluent limitations and conditions, and the public participation process for the Missouri State Operating Permit (operating permit) listed below.

A Factsheet is not an enforceable part of an operating permit.

This Factsheet is for a Minor.

Part I – Facility Information

Facility Type: NON-POTW – Camps and Recreational Parks– SIC #7033

Facility Description:
Extended aeration/ aerobic digester/ sludge disposal by contract hauler
Design population equivalent is 300.
Design flow is 29,130 gallons per day. Adjusted Design Flow is 4,999 gallons per day.
Actual flow is 439 gallons per day.
Design sludge production is 0.5 dry tons/year.

Have any changes occurred at this facility or in the receiving water body that effects effluent limit derivation?
☒ - No

Application Date: 03/15/16
Expiration Date: 09/30/16

OUTFALL(S) TABLE:

OUTFALL	DESIGN FLOW (CFS)	TREATMENT LEVEL	EFFLUENT TYPE
#001	0.045	Secondary	Domestic

Facility Performance History:
This Facility has not been inspected at this time.

Comments:
Due to permit synchronization, the previous permit cycle was reduced to a time period of less than 5 years. Therefore, all previous permit limitations from the short term permit have been carried over to this permit. Special conditions were updated to include the reporting of Non-detects and bypass reporting requirements. The permit for this facility issued on January 1, 2014 included new effluent limitations, and a 3 year schedule to attain compliance with those final effluent limitations. This permit contains the remaining portion of the schedule. Compliance must be achieved by January 1,2017.

Part II – Operator Certification Requirements

☒ - This facility is not required to have a certified operator.

Part III– Operational Monitoring

☒ - As per [10 CSR 20-9.010(4))], the facility is not required to conduct operational monitoring.

Part IV – Receiving Stream Information

RECEIVING STREAM(S) TABLE: OUTFALL #001

WATER-BODY NAME	CLASS	WBID	DESIGNATED USES*	12-DIGIT HUC	DISTANCE TO CLASSIFIED SEGMENT (MI)
8-20-13 MUDD V1.0	C	3960	AQL, HHP, IRR, LWW, SCR, WBC-B	10301104-0105	0.0
Hogan Fork	C	3425	AQL, HHP, IRR, LWW, SCR		

*As per 10 CSR 20-7.031 Missouri Water Quality Standards, the department defines the Clean Water Commission's water quality objectives in terms of "water uses to be maintained and the criteria to protect those uses." The receiving stream and 1st classified receiving stream's beneficial water uses to be maintained are in the receiving stream table in accordance with [10 CSR 20-7.031(1)(C)].

Uses which may be found in the receiving streams table, above:

10 CSR 20-7.031(1)(C)1.:
AQL = Protection of aquatic life (Current narrative use(s) are defined to ensure the protection and propagation of fish shellfish and wildlife, which is further subcategorized as: WWH = Warm Water Habitat; **CDF** = Cold-water fishery (Current narrative use is cold-water habitat.); **CLF** = Cool-water fishery (Current narrative use is cool-water habitat); EAH = Ephemeral Aquatic Habitat; MAH = Modified Aquatic Habitat; LAH = Limited Aquatic Habitat. This permit uses AQL effluent limitations in 10 CSR 20-7.031 Table A for all habitat designations unless otherwise specified.)

10 CSR 20-7.031(1)(C)2.: Recreation in and on the water
WBC = Whole Body Contact recreation where the entire body is capable of being submerged;
WBC-A = Whole body contact recreation that supports swimming uses and has public access;
WBC-B = Whole body contact recreation that supports swimming;
SCR = Secondary Contact Recreation (like fishing, wading, and boating).

10 CSR 20-7.031(1)(C)3. to 7.:
HHP (formerly HHF) = Human Health Protection as it relates to the consumption of fish;
IRR = Irrigation for use on crops utilized for human or livestock consumption;
LWW = Livestock and wildlife watering (Current narrative use is defined as LWP = Livestock and Wildlife Protection);
DWS = Drinking Water Supply;
IND = Industrial water supply

10 CSR 20-7.031(1)(C)8-11.: Wetlands (10 CSR 20-7.031 Table A currently does not have corresponding habitat use criteria for these defined uses)
WSA = Storm- and flood-water storage and attenuation; WHP = Habitat for resident and migratory wildlife species; WRC = Recreational, cultural, educational, scientific, and natural aesthetic values and uses; WHC = Hydrologic cycle maintenance.

10 CSR 20-7.031(6): **GRW** = Groundwater

RECEIVING STREAM(S) LOW-FLOW VALUES:

RECEIVING STREAM (C, E, P, P1)	LOW-FLOW VALUES (CFS)		
	1Q10	7Q10	30Q10
8-20-13 MUDD V1.0	0	0	0

MIXING CONSIDERATIONS TABLE:

MIXING ZONE (CFS) [10 CSR 20-7.031(5)(A)4.B.(I)(a)]			ZONE OF INITIAL DILUTION (CFS) [10 CSR 20-7.031(5)(A)4.B(I)(b)]		
1Q10	7Q10	30Q10	1Q10	7Q10	30Q10
0	0	0	0	0	N/A

RECEIVING STREAM MONITORING REQUIREMENTS:
No receiving water monitoring requirements recommended at this time.

Receiving Water Body's Water Quality
Currently, no stream survey has been conducted by the Department. When a stream survey is conducted, more information may be available about the receiving stream.

Part V – Rationale and Derivation of Effluent Limitations & Permit Conditions

ADJUSTED DESIGN FLOW:
10 CSR 20-6.011(1)(B)1 provides for an Adjusted Design Flow when calculating permit fees for wastewater treatment facilities. If the average flow is sixty percent (60%) or less than the system's design flow, the average flow may be substituted for the design flow when calculating the annual operating fee.

If the facility's actual average flow is consistently 60 percent or less than the permitted design flow, the facility may qualify for a reduction in your fee when:

- The facility has a valid permit, or has applied for re-issuance, is in compliance with the terms, conditions and effluent limitations of the permit, and the facility has a good compliance history; and
- Flow is not expected to exceed 60% of design flow for the remaining term of the existing operating permit.

Based on the facility's compliance status and/or the information provided, the facility is;

☒ - Approved for an Adjusted Design Flow.

☐ - Not approved for an Adjusted Design Flow.

ALTERNATIVE EVALUATIONS FOR NEW FACILITIES:
As per [10 CSR 20-7.015(4)(A)], discharges to losing streams shall be permitted only after other alternatives including land application, discharges to a gaining stream and connection to a regional wastewater treatment facility have been evaluated and determined to be unacceptable for environmental and/or economic reasons.

☐ - The facility discharges to a Losing Stream as defined by [10 CSR 20-2.010(36)] & [10 CSR 20-7.031(1)(N)].

☒ - The facility does not discharge to a Losing Stream as defined by [10 CSR 20-2.010(36)] & [10 CSR 20-7.031(1)(N)], or is an existing facility.

ANTI-BACKSLIDING:
A provision in the Federal Regulations [CWA §303(d)(4); CWA §402(o); 40 CFR Part 122.44(l)] that requires a reissued permit to be as stringent as the previous permit with some exceptions.

☒ - All limits in this operating permit are at least as protective as those previously established; therefore, backsliding does not apply.

☐ - This is a new facility, backsliding does not apply.

☐ - Limitations in this operating permit for the reissuance of this permit conform to the anti-backsliding provisions of Section 402(o) of the Clean Water Act, and 40 CFR Part 122.44.

ANTIDEGRADATION:
In accordance with Missouri's Water Quality Standard [10 CSR 20-7.031(3)], the Department is to document by means of Antidegradation Review that the use of a water body's available assimilative capacity is justified. Degradation is justified by documenting the socio-economic importance of a discharging activity after determining the necessity of the discharge.

☒ - No degradation proposed and no further review necessary. Facility did not apply for authorization to increase pollutant loading or to add additional pollutants to their discharge.

☐ - This permit contains new and/or expanded discharge; please see **APPENDIX FOR ANTIDEGRADATION ANALYSIS.**

AREA-WIDE WASTE TREATMENT MANAGEMENT & CONTINUING AUTHORITY:
As per [10 CSR 20-6.010(3)(B)], …An applicant may utilize a lower preference continuing authority by submitting, as part of the application, a statement waiving preferential status from each existing higher preference authority, providing the waiver does not conflict with any area-wide management plan approved under section 208 of the Federal Clean Water Act or any other regional sewage service and treatment plan approved for higher preference authority by the Department.

BIOSOLIDS & SEWAGE SLUDGE:
Biosolids are solid materials resulting from domestic wastewater treatment that meet federal and state criteria for beneficial uses (i.e. fertilizer). Sewage sludge is solids, semi-solids, or liquid residue generated during the treatment of domestic sewage in a treatment works; including but not limited to, domestic septage; scum or solids removed in primary, secondary, or advanced wastewater treatment process; and a material derived from sewage sludge. Sewage sludge does not include ash generated during the firing of sewage sludge in a sewage sludge incinerator or grit and screening generated during preliminary treatment of domestic sewage in a treatment works. Additional information regarding biosolids and sludge is located at the following web address: http://extension.missouri.edu/main/DisplayCategory.aspx?C=74, items WQ422 through WQ449.

☐ - Permittee land applies biosolids in accordance with Standard Conditions III and a Department approved biosolids management plan.

☒ - Permittee is not authorized to land apply biosolids. Sludge/biosolids are removed by contract hauler.

COMPLIANCE AND ENFORCEMENT:
Enforcement is the action taken by the Water Protection Program (WPP) to bring an entity into compliance with the Missouri Clean Water Law, its implementing regulations, and/or any terms and conditions of an operating permit. The primary purpose of the enforcement activity in the WPP is to resolve violations and return the entity to compliance.

☐ - The facility is currently under enforcement action.

☒ - The facility is not currently under Water Protection Program enforcement action.

DISCHARGE MONITORING REPORTS:
On July 30, 2013, EPA proposed the Clean Water Act National Pollutant Discharge Elimination System (NPDES) Electronic Reporting Rule, which requires electronic reporting of NPDES information rather than the currently-required paper-based reports from permitted facilities. To comply with the upcoming federal rule, the Department is asking all permittees to begin submitting discharge monitoring data online. For permittees already using the Department's eDMR data reporting system, those permittees will be required to exclusively use the eDMR data reporting system.

☒ - The permittee/facility is not currently using the eDMR data reporting system. To sign up for the eDMR system, visit the Department's eDMR page at http://dnr.mo.gov/env/wpp/edmr.htm.

PRETREATMENT PROGRAM:
The reduction of the amount of pollutants, the elimination of pollutants, or the alteration of the nature of pollutant properties in wastewater prior to or in lieu of discharging or otherwise introducing such pollutants into a Publicly Owned Treatment Works [40 CFR Part 403.3(q)].

Pretreatment programs are required at any POTW (or combination of POTW operated by the same authority) and/or municipality with a total design flow greater than 5.0 MGD and receiving industrial wastes that interfere with or pass through the treatment works or are otherwise subject to the pretreatment standards. Pretreatment programs can also be required at POTWs/municipals with a design flow less than 5.0 MGD if needed to prevent interference with operations or pass through.

☒ - The permittee, at this time, is not required to have a Pretreatment Program or does not have an approved pretreatment program.

REASONABLE POTENTIAL ANALYSIS (RPA):
Federal regulation [40 CFR Part 122.44(d)(1)(i)] requires effluent limitations for all pollutants that are or may be discharged at a level that will cause or have the reasonable potential to cause or contribute to an in-stream excursion above narrative or numeric water quality standard.

In accordance with [40 CFR Part 122.44(d)(1)(iii)] if the permit writer determines that any given pollutant has the reasonable potential to cause, or contribute to an in-stream excursion above the WQS, the permit must contain effluent limits for that pollutant.

☒ - An RPA analysis was completed for the last permit cycle. Due to permit synchronization, the previous permit cycle was reduced to a time period of less than 5 years. Therefore, all RPA results from short term permit have been carried over to this permit.

REMOVAL EFFICIENCY:
Removal efficiency is a method by which the Federal Regulations define Secondary Treatment and Equivalent to Secondary Treatment, which applies to Biochemical Oxygen Demand 5-day (BOD_5) and Total Suspended Solids (TSS) for Publicly Owned Treatment Works (POTWs)/municipals.

☐ - Secondary Treatment is 85% removal [40 CFR Part 133.102(a)(3) & (b)(3)].

☐ - Equivalent to Secondary Treatment is 65% removal [40 CFR Part 133.105(a)(3) & (b)(3)].

☒ - Influent monitoring is not being required to determine percent removal.

SANITARY SEWER OVERFLOWS (SSO) AND INFLOW AND INFILTRATION (I&I):
Sanitary Sewer Overflows (SSOs) are defined as untreated sewage releases and are considered bypassing under state regulation [10 CSR 20-2.010(11)] and should not be confused with the federal definition of bypass. SSOs result from a variety of causes including blockages, line breaks, and sewer defects that can either allow wastewater to backup within the collection system during dry weather conditions or allow excess stormwater and groundwater to enter and overload the collection system during wet weather conditions. SSOs can also result from lapses in sewer system operation and maintenance, inadequate sewer design and construction, power failures, and vandalism. SSOs include overflows out of manholes, cleanouts, broken pipes, and other into waters of the state and onto city streets, sidewalks, and other terrestrial locations.

Inflow and Infiltration (I&I) is defined as unwanted intrusion of stormwater or groundwater into a collection system. This can occur from points of direct connection such as sump pumps, roof drain downspouts, foundation drains, and storm drain cross-connections or through cracks, holes, joint failures, faulty line connections, damaged manholes, and other openings in the collection system itself. I&I results from a variety of causes including line breaks, improperly sealed connections, cracks caused by soil erosion/settling, penetration of vegetative roots, and other sewer defects. In addition, excess stormwater and groundwater entering the collection system from line breaks and sewer defects have the potential to negatively impact the treatment facility.

Missouri RSMo §644.026.1.(13) mandates that the Department issue permits for discharges of water contaminants into the waters of this state, and also for the operation of sewer systems. Such permit conditions shall ensure compliance with all requirements as established by sections 644.006 to 644.141. Standard Conditions Part I, referenced in the permit, contains provisions requiring proper operation and maintenance of all facilities and systems of treatment and control. Missouri RSMo §644.026.1.(15) instructs the Department to require proper maintenance and operation of treatment facilities and sewer systems and proper disposal of residual waste from all such facilities. To ensure that public health and the environment are protected, any noncompliance which may endanger public health or the environment must be reported to the Department within 24 hours of the time the permittee becomes aware of the noncompliance. Standard Conditions Part I, referenced in the permit, contains the reporting requirements for the permittee when bypasses and upsets occur. The permit also contains requirements for permittees to develop and implement a program for maintenance and repair of the collection system. The permit requires that the permittee submit an annual report to the Department for the previous calendar year that contains a list of all SSOs and building backups (locations, features of collection system where the SSO/building backup occurred, volumes, durations, receiving stream, causes, mitigation efforts, and actions to prevent reoccurrences), a summary of efforts taken by the permittee to locate and eliminate sources of excess I & I, a summary of general maintenance and repairs to the collection system, and a summary of any planned maintenance and repairs to the collection system for the upcoming calendar year.

☒ - This facility is not required to develop or implement a program for maintenance and repair of the collection system; however, it is a violation of Missouri State Environmental Laws and Regulations to allow untreated wastewater to discharge to waters of the state.

SCHEDULE OF COMPLIANCE (SOC):
Per 644.051.4 RSMo, a permit may be issued with a Schedule of Compliance (SOC) to provide time for a facility to come into compliance with new state or federal effluent regulations, water quality standards, or other requirements. Such a schedule is not allowed if the facility is already in compliance with the new requirement, or if prohibited by other statute or regulation. A SOC includes an enforceable sequence of interim requirements (actions, operations, or milestone events) leading to compliance with the Missouri Clean Water Law, its implementing regulations, and/or the terms and conditions of an operating permit. *See also* Section 502(17) of the Clean Water Act, and 40 CFR §122.2. For new effluent limitations, the permit includes interim monitoring for the specific parameter to demonstrate the facility is not already in compliance with the new requirement. Per 40 CFR § 122.47(a)(1) and 10 CSR 20-7.031(11), compliance must occur as soon as possible. If the permit provides a schedule for meeting new water quality based effluent limits, a SOC must include an enforceable, final effluent limitation in the permit even if the SOC extends beyond the life of the permit.

A SOC is not allowed:

- For effluent limitations based on technology-based standards established in accordance with federal requirements, if the deadline for compliance established in federal regulations has passed. 40 CFR § 125.3.
- For a newly constructed facility in most cases. Newly constructed facilities must meet applicable effluent limitations when discharge begins, because the facility has installed the appropriate control technology as specified in a permit or antidegradation review. A SOC is allowed for a new water quality based effluent limit that was not included in a previously public noticed permit or antidegradation review, which may occur if a regulation changes during construction.
- To develop a TMDL, UAA, or other study associated with development of a site specific criterion. A facility is not prohibited from conducting these activities, but a SOC may not be granted for conducting these activities.

In order to provide guidance to Permit Writers in developing SOCs, and attain a greater level of consistency, on April 9, 2015 the Department issued an updated policy on development of SOCs. This policy provides guidance to Permit Writers on the standard time frames for schedules for common activities, and guidance on factors that may modify the length of the schedule such as a Cost Analysis for Compliance.

☒ - The permit for this facility issued on January 1, 2014 included new effluent limitations, and a 3 year schedule to attain compliance with those final effluent limitations. This permit contains the remaining portion of the schedule. Compliance must be achieved by January 1, 2017

STORMWATER POLLUTION PREVENTION PLAN (SWPPP):
In accordance with 40 CFR 122.44(k) *Best Management Practices (BMPs)* to control or abate the discharge of pollutants when: (1) Authorized under section 304(e) of the Clean Water Act (CWA) for the control of toxic pollutants and hazardous substances from ancillary industrial activities: (2) Authorized under section 402(p) of the CWA for the control of stormwater discharges; (3) Numeric effluent limitations are infeasible; or (4) the practices are reasonably necessary to achieve effluent limitations and standards or to carry out the purposes and intent of the CWA.

In accordance with the EPA's *Developing Your Stormwater Pollution Prevention Plan, A Guide for Industrial Operators*, (Document number EPA 833-B-09-002) [published by the United States Environmental Protection Agency (USEPA) in February 2009], BMPs are measures or practices used to reduce the amount of pollution entering (regarding this operating permit) waters of the state. BMPs may take the form of a process, activity, or physical structure.

Additionally in accordance with the Stormwater Management, a SWPPP is a series of steps and activities to (1) identify sources of pollution or contamination, and (2) select and carry out actions which prevent or control the pollution of stormwater discharges.

☒ - At this time, the permittee is not required to develop and implement a SWPPP.

VARIANCE:
As per the Missouri Clean Water Law § 644.061.4, variances shall be granted for such period of time and under such terms and conditions as shall be specified by the commission in its order. The variance may be extended by affirmative action of the commission. In no event shall the variance be granted for a period of time greater than is reasonably necessary for complying with the Missouri Clean Water Law §§644.006 to 644.141 or any standard, rule or regulation promulgated pursuant to Missouri Clean Water Law §§644.006 to 644.141.

☐ - This operating permit is drafted under premises of a petition for variance.

☒ - This operating permit is not drafted under premises of a petition for variance.

WASTELOAD ALLOCATIONS (WLA) FOR LIMITS:
As per [10 CSR 20-2.010(78)], the amount of pollutant each discharger is allowed by the Department to release into a given stream after the Department has determined total amount of pollutant that may be discharged into that stream without endangering its water quality.

☒ - Wasteload allocations were calculated where applicable using water quality criteria or water quality model results and the dilution equation below:

$$Ce = \frac{(Qe + Qs)C - (Qs \times Cs)}{(Qe)}$$ (EPA/505/2-90-001, Section 4.5.5)

Where C = downstream concentration
Cs = upstream concentration
Qs = upstream flow
Ce = effluent concentration
Qe = effluent flow

Chronic wasteload allocations were determined using applicable chronic water quality criteria (CCC: criteria continuous concentration) and stream volume of flow at the edge of the mixing zone (MZ). Acute wasteload allocations were determined using applicable water quality criteria (CMC: criteria maximum concentration) and stream volume of flow at the edge of the zone of initial dilution (ZID).

Water quality based maximum daily and average monthly effluent limitations were calculated using methods and procedures outlined in USEPA's "Technical Support Document For Water Quality-based Toxics Control" (EPA/505/2-90-001).

Number of Samples "n":
Additionally, in accordance with the TSD for water quality-based permitting, effluent quality is determined by the underlying distribution of daily values, which is determined by the Long Term Average (LTA) associated with a particular Wasteload Allocation (WLA) and by the Coefficient of Variation (CV) of the effluent concentrations. Increasing or decreasing the monitoring frequency does not affect this underlying distribution or treatment performance, which should be, at a minimum, be targeted to comply with the values dictated by the WLA. Therefore, it is recommended that the actual planned frequency of monitoring normally be used to determine the value of "n" for calculating the AML. However, in situations where monitoring frequency is once per month or less, a higher value for "n" must be assumed for AML derivation purposes. Thus, the statistical procedure being employed using an assumed number of samples is "n = 4" at a minimum. For Total Ammonia as Nitrogen, "n = 30" is used.

☐ - Wasteload allocations were not calculated.

WLA MODELING:
There are two general types of effluent limitations, technology-based effluent limits (TBELs) and water quality based effluent limits (WQBELs). If TBELs do not provide adequate protection for the receiving waters, then WQBEL must be used.

☐ - A WLA study including model was submitted to the Department.

☒ - A WLA study was either not submitted or determined not applicable by Department staff.

WATER QUALITY STANDARDS:
Per [10 CSR 20-7.031(4)], General Criteria shall be applicable to all waters of the state at all times including mixing zones. Additionally, [40 CFR 122.44(d)(1)] directs the Department to establish in each NPDES permit to include conditions to achieve water quality established under Section 303 of the Clean Water Act, including State narrative criteria for water quality.

WHOLE EFFLUENT TOXICITY (WET) TEST:

A WET test is a quantifiable method of determining if a discharge from a facility may be causing toxicity to aquatic life by itself, in combination with or through synergistic responses when mixed with receiving stream water.

Under the federal Clean Water Act (CWA) §101(a)(3), requiring WET testing is reasonably appropriate for site-specific Missouri State Operating Permits for discharges to waters of the state issued under the National Pollutant Discharge Elimination System (NPDES). WET testing is also required by 40 CFR 122.44(d)(1). WET testing ensures that the provisions in the 10 CSR 20-6.010(8)(A)7. and the Water Quality Standards 10 CSR 20-7.031(4)(D),(F),(G),(I)2.A & B are being met. Under [10 CSR 20-6.010(8)(A)4], the Department may require other terms and conditions that it deems necessary to assure compliance with the Clean

Water Act and related regulations of the Missouri Clean Water Commission. In addition the following MCWL apply: §§§644.051.3 requires the Department to set permit conditions that comply with the MCWL and CWA; 644.051.4 specifically references toxicity as an item we must consider in writing permits (along with water quality-based effluent limits, pretreatment, etc…); and 644.051.5 is the basic authority to require testing conditions. WET test will be required by facilities meeting the following criteria:

- ☐ Facility is a designated Major.
- ☐ Facility continuously or routinely exceeds its design flow.
- ☐ Facility that exceeds its design population equivalent (PE) for BOD_5 whether or not its design flow is being exceeded.
- ☐ Facility (whether primarily domestic or industrial) that alters its production process throughout the year.
- ☐ Facility handles large quantities of toxic substances, or substances that are toxic in large amounts.
- ☐ Facility has Water Quality-based Effluent Limitations for toxic substances (other than NH_3)
- ☐ Facility is a municipality with a Design Flow ≥ 22,500 gpd.
- ☐ Other – please justify.

☒ - At this time, the permittee is not required to conduct WET test for this facility.

40 CFR 122.41(M) - BYPASSES:

The federal Clean Water Act (CWA), Section 402 prohibits wastewater dischargers from "bypassing" untreated or partially treated sewage (wastewater) beyond the headworks. A bypass is defined as an intentional diversion of waste streams from any portion of a treatment facility, [40 CFR 122.41(m)(1)(i)]. Additionally, Missouri regulation 10 CSR 20-7.015(9)(G) states a bypass means the intentional diversion of waste streams from any portion of a treatment facility, except in the case of blending, to waters of the state. Only under exceptional and specified limitations do the federal regulations allow for a facility to bypass some or all of the flow from its treatment process. Bypasses are prohibited by the CWA unless a permittee can meet all of the criteria listed in 40 CFR 122.41(m)(4)(i)(A), (B), & (C). Any bypasses from this facility are subject to the reporting required in 40 CFR 122.41(l)(6) and per Missouri's Standard Conditions I, Section B, part 2.b. Additionally, Anticipated Bypasses include bypasses from peak flow basins or similar devices designed for peak wet weather flows.

☐ - Bypasses occur or have occurred at this facility.

☒ - This facility does not anticipate bypassing.

303(d) LIST & TOTAL MAXIMUM DAILY LOAD (TMDL):

Section 303(d) of the federal Clean Water Act requires that each state identify waters that are not meeting water quality standards and for which adequate water pollution controls have not been required. Water quality standards protect such beneficial uses of water as whole body contact (such as swimming), maintaining fish and other aquatic life, and providing drinking water for people, livestock and wildlife. The 303(d) list helps state and federal agencies keep track of waters that are impaired but not addressed by normal water pollution control programs.

A TMDL is a calculation of the maximum amount of a given pollutant that a body of water can absorb before its water quality is affected. If a water body is determined to be impaired as listed on the 303(d) list, then a watershed management plan will be developed that shall include the TMDL calculation

☒ - This facility does not discharge to a 303(d) listed stream.

Part VI –2013 Water Quality Criteria for Ammonia

Upcoming changes to the Water Quality Standard for ammonia may require significant upgrades to wastewater treatment facilities.

On August 22, 2013, the U.S. Environmental Protection Agency (EPA) finalized new water quality criteria for ammonia, based on toxicity studies of mussels and gill breathing snails. Missouri's current ammonia criteria are based on toxicity testing of several species, but did not include data from mussels or gill breathing snails. Missouri is home to 69 of North America's mussel species, which are spread across the state. According to the Missouri Department of Conservation nearly two-thirds of the mussel species in Missouri are considered to be "of conservation concern". Nine species are listed as federally endangered, with an additional species currently proposed as endangered and another species proposed as threatened.

The adult forms of mussels that are seen in rivers, lakes, and streams are sensitive to pollutants because they are sedentary filter feeders. They vacuum up many pollutants with the food they bring in and cannot escape to new habitats, so they can accumulate toxins in their bodies and die. But very young mussels, called glochidia, are exceptionally sensitive to ammonia in water. As a result of a citizen suit, the EPA was compelled to conduct toxicity testing and develop ammonia water quality criteria that would be protective if young mussels may be present in a waterbody. These new criteria will apply to any discharge with ammonia levels that may pose a reasonable potential to violate the standards. Nearly all discharging domestic wastewater treatment facilities (cities,

subdivisions, mobile home parks, etc.), as well as certain industrial and stormwater dischargers with ammonia in their effluent, will be affected by this change in the regulations.

When new water quality criteria are established by the EPA, states must adopt them into their regulations in order to keep their authorization to issue permits under the National Pollutant Discharge Elimination System (NPDES). States are required to review their water quality standards every three years, and if new criteria have been developed they must be adopted. States may be more protective than the Federal requirements, but not less protective. Missouri does not have the resources to conduct the studies necessary for developing new water quality standards, and therefore our standards mirror those developed by the EPA; however, we will utilize any available flexibility based on actual species of mussels that are native to Missouri and their sensitivity to ammonia.

Many treatment facilities in Missouri are currently scheduled to be upgraded to comply with the current water quality standards. But these new ammonia standards may require a different treatment technology than the one being considered by the permittee. It is important that permittees discuss any new and upcoming requirements with their consulting engineers to ensure that their treatment systems are capable of complying with the new requirements. The Department encourages permittees to construct treatment technologies that can attain effluent quality that supports the EPA ammonia criteria.

Ammonia toxicity varies by temperature and by pH of the water. Assuming a stable pH value, but taking into account winter and summer temperatures, Missouri includes two seasons of ammonia effluent limitations. Current effluent limitations in this permit are:

Summer – 3.6 mg/L daily maximum, 1.4 mg/L monthly average.
Winter – 7.5 mg/L daily maximum, 2.9 mg/L monthly average.

Under the new EPA criteria, where mussels of the family Unionidae are present or expected to be present, the <u>estimated</u> effluent limitations for a facility in a location such as this that discharges to a receiving stream with no mixing will be:

Season	Temp (°C)	pH (SU)	Total Ammonia Nitrogen CCC (mg/L)	Total Ammonia Nitrogen CMC (mg/L)
Summer	26	7.8	0.7	3.4
Winter	6	7.8	2.3	13

<u>Summer: April 1 – September 30</u>

Chronic WLA: $C_e = ((0.045 + 0.0)0.7 – (0.0 * 0.01))/0.045$
$C_e = 0.7$ mg/L

Acute WLA: $C_e = ((0.045 + 0.0)3.4 – (0.0 * 0.01))/0.045$
$C_e = 3.4$ mg/L

$LTA_c = 0.7$ mg/L (0.780) = 0.55 mg/L [CV = 0.6, 99th Percentile, 30 day avg.]
$LTA_a = 3.4$ mg/L (0.321) = 1.09 mg/L [CV = 0.6, 99th Percentile]

Use most protective number of LTA_c or LTA_a.

MDL = 0.55 mg/L (3.11) = 1.7 mg/L [CV = 0.6, 99th Percentile]
AML = 0.55 mg/L (1.19) = 0.6 mg/L [CV = 0.6, 95th Percentile, n =30]

<u>Winter: October 1 – March 31</u>

Chronic WLA: $C_e = ((0.045 + 0.0)2.3 – (0.0 * 0.01))/0.045$
$C_e = 2.3$ mg/L

Acute WLA: $C_e = ((0.045 + 0.0)13 – (0.0 * 0.01))/0.045$
$C_e = 13$ mg/L

$LTA_c = 2.3$ mg/L (0.780) = 1.79 mg/L [CV = 0.6, 99th Percentile, 30 day avg.]
$LTA_a = 13$ mg/L (0.321) = 4.17 mg/L [CV = 0.6, 99th Percentile]

Use most protective number of LTA_c or LTA_a.

MDL = 1.79 mg/L (3.11) = 5.6 mg/L [CV = 0.6, 99th Percentile]
AML = 1.79 mg/L (1.19) = 2.1 mg/L [CV = 0.6, 95th Percentile, n =30]

Summer – 1.7 mg/L daily maximum, 0.6 mg/L monthly average.
Winter – 5.6 mg/L daily maximum, 2.1 mg/L monthly average.

These estimated limits above are based in part on the actual performance of the plant at the time of the drafting of this permit and should not be construed as future effluent limitations. Future effluent limits, based on the EPA's 2013 water quality criteria for ammonia, will depend in part on the actual performance of the facility at the time the permit is renewed.

Operating permits for facilities in Missouri must be written based on current statutes and regulations. Therefore permits will be written with the existing effluent limitations until the new standards are adopted. To aid permittees in decision making, an advisory will be added to permit Fact Sheets notifying permittees of the expected effluent limitations for ammonia. When setting schedules of compliance for ammonia effluent limitations, consideration will be given to facilities that have recently constructed upgraded facilities to meet the current ammonia limitations.

For more information on this topic feel free to contact the Missouri Department of Natural Resources, Water Protection Program, Water Pollution Control Branch, Operating Permits Section at (573) 751-1300.

Part VII – Effluent Limits Determination

APPLICABLE DESIGNATIONS OF WATERS OF THE STATE:
As per Missouri's Effluent Regulations [10 CSR 20-7.015], the waters of the state are divided into the below listed seven (7) categories. Each category lists effluent limitations for specific parameters, which are presented in each outfall's Effluent Limitation Table and further discussed in the Derivation & Discussion of Limits section.

- ☐ Missouri or Mississippi River [10 CSR 20-7.015(2)]
- ☐ Lake or Reservoir [10 CSR 20-7.015(3)]
- ☐ Losing [10 CSR 20-7.015(4)]
- ☐ Subsurface Water [10 CSR 20-7.015(7)]
- ☒ All Other Waters [10 CSR 20-7.015(8)]
- ☐ Metropolitan No-Discharge [10 CSR 20-7.015(5)]

OUTFALL #001 – MAIN FACILITY OUTFALL

Effluent limitations derived and established in the below Effluent Limitations Table are based on current operations of the facility. Future permit action due to facility modification may contain new operating permit terms and conditions that supersede the terms and conditions, including effluent limitations, of this operating permit.

EFFLUENT LIMITATIONS TABLE:

PARAMETER	Unit	Basis for Limits	Daily Maximum	Weekly Average	Monthly Average	Previous Permit Limit	Sampling Frequency	Reporting Frequency	Sample Type ****
Flow	MGD	1	*		*	*/*	1/month	monthly	T
BOD_5	mg/L	1		45	30	45/30	1/month	monthly	C
TSS	mg/L	1		45	30	45/30	1/month	monthly	C
Escherichia coli **	#/100mL	1, 3	1030		206	1030/ 206	1/month	monthly	G
Ammonia as N (Apr 1 –Sep 30)	mg/L	2, 3	3.6		1.4	3.6/1.4	1/month	monthly	G
Ammonia as N (Oct 1 – Mar 31)	mg/L	2, 3	7.5		2.9	7.5/2.9	1/month	monthly	G
PARAMETER	Unit	Basis for Limits	Minimum		Maximum	Previous Permit Limit	Sampling Frequency	Reporting Frequency	Sample Type
pH	SU	1	6.5		9.0	6.5-9.0	1/month	monthly	G

* - Monitoring requirement only.
** - #/100mL; the Monthly Average for *E. coli* is a geometric mean.
*** - Parameter not previously established in previous state operating permit.

**** - C = 24-hour composite
G = Grab
T = 24-hr. total
E = 24-hr. estimate

Basis for Limitations Codes:
1. State or Federal Regulation/Law
2. Water Quality Standard (includes RPA)
3. Water Quality Based Effluent Limits
4. Antidegradation Review
5. Antidegradation Policy
6. Water Quality Model
7. Best Professional Judgment
8. TMDL or Permit in lieu of TMDL
9. WET Test Policy
10. Multiple Discharger Variance

OUTFALL #001 – DERIVATION AND DISCUSSION OF LIMITS:

- **Flow**. In accordance with [40 CFR Part 122.44(i)(1)(ii)] the volume of effluent discharged from each outfall is needed to assure compliance with permitted effluent limitations. If the permittee is unable to obtain effluent flow, then it is the responsibility of the permittee to inform the Department, which may require the submittal of an operating permit modification.

- **Biochemical Oxygen Demand (BOD_5).** Effluent limitations have been retained from previous state operating permit, please see the **APPLICABLE DESIGNATION OF WATERS OF THE STATE** sub-section of the **Effluent Limits Determination.**

- **Total Suspended Solids (TSS).** Effluent limitations have been retained from previous state operating permit, please see the **APPLICABLE DESIGNATION OF WATERS OF THE STATE** sub-section of the **Effluent Limits Determination.**

- ***Escherichia coli (E. coli)***. Monthly average of 206 per 100 mL as a geometric mean and daily maximum of 1030 per 100 mL during the recreational season (April 1 – October 31), to protect Whole Body Contact Recreation (B) designated use of the receiving stream, as per 10 CSR 20-7.031(5)(C). An effluent limit for both monthly average and daily maximum is required by 40 CFR 122.45(d). The Geometric Mean is calculated by multiplying all of the data points and then taking the nth root of this product, where n = # of samples collected. For example: Five *E. coli* samples were collected with results of 1, 4, 6, 10, and 5 (#/100mL). Geometric Mean = 5th root of (1)(4)(6)(10)(5) = 5th root of 1,200 = 4.1 #/100mL.

- **Total Ammonia Nitrogen**. Early Life Stages Present Total Ammonia Nitrogen criteria apply [10 CSR 20-7.031(5)(B)7.C. & Table B3]. Background total ammonia nitrogen = 0.01 mg/L. No mixing considerations allowed; therefore, WLA = appropriate criterion.

Season	Temp (°C)	pH (SU)	Total Ammonia Nitrogen CCC (mg/L)	Total Ammonia Nitrogen CMC (mg/L)
Summer	26	7.8	1.5	12.1
Winter	6	7.8	3.1	12.1

Summer: April 1 – September 30

Chronic WLA: C_e = ((0.045 + 0.0)1.5 – (0.0 * 0.01))/0.045
C_e = 1.5 mg/L

Acute WLA: C_e = ((0.045 + 0.0)12.1 – (0.0 * 0.01))/0.045
C_e = 12.1 mg/L

LTA_c = 1.5 mg/L (0.780) = 1.17 mg/L [CV = 0.6, 99th Percentile, 30 day avg.]
LTA_a = 12.1 mg/L (0.321) = 3.89 mg/L [CV = 0.6, 99th Percentile]

Use most protective number of LTA_c or LTA_a.

MDL = 1.17 mg/L (3.11) = 3.6 mg/L [CV = 0.6, 99th Percentile]
AML = 1.17 mg/L (1.19) = 1.4 mg/L [CV = 0.6, 95th Percentile, n =30]

Winter: October 1 – March 31

Chronic WLA: C_e = ((0.045 + 0.0)3.1 – (0.0 * 0.01))/0.045
C_e = 3.1 mg/L

Acute WLA: C_e = ((0.045 + 0.0)12.1 – (0.0 * 0.01))/0.045
C_e = 12.1 mg/L

LTA_c = 3.1 mg/L (0.780) = 2.42 mg/L [CV = 0.6, 99th Percentile, 30 day avg.]
LTA_a = 12.1 mg/L (0.321) = 3.89 mg/L [CV = 0.6, 99th Percentile]

Use most protective number of LTA_c or LTA_a.

MDL = 2.42 mg/L (3.11) = 7.5 mg/L [CV = 0.6, 99th Percentile]
AML = 2.42 mg/L (1.19) = 2.9 mg/L [CV = 0.6, 95th Percentile, n =30]

- **pH**. – ≥ 6.5-9.0 SU. pH limitations of 6.0-9.0 SU [10 CSR 20-7.015] are not protective of the in-stream Water Quality Standard, which states that water contaminants shall not cause pH to be outside the range of 6.5-9.0 SU. No mixing zone is allowed due to the classification of the receiving stream, therefore the water quality standard must be met at the outfall.

Sampling Frequency Justification:

Sampling and Reporting Frequency was retained from previous permit. Sampling for *E. coli* is set at monthly per 10 CSR 20-7.015(9)(D)6.C.

Sampling Type Justification:

As per 10 CSR 20-7.015, BOD_5 and TSS test samples collected for mechanical plants shall be a 24 hour composite sample. Due to the small size of this facility this composite sample shall be made up from a minimum of four grab samples collected within a 24-hour period with a minimum of two hours between each grab sample. Grab samples, however, must be collected for pH, Ammonia as N, *E. coli*.. This is due to the holding time restriction for *E. coli*, the volatility of Ammonia, and the fact that pH cannot be preserved and must be sampled in the field. As Ammonia samples must be immediately preserved with acid, these samples are to be collected as a grab.

Part VIII – Cost Analysis for Compliance

Pursuant to Section 644.145, RSMo., the Department is required to determine whether a permit or decision is affordable and makes a "finding of affordability" for certain permitting and enforcement decisions. This requirement applies to discharges from combined or separate sanitary sewer systems or publically-owned treatment works.

- The Department is not required to complete a cost analysis for compliance because the facility is not a combined or separate sanitary sewer system for a publically-owned treatment works.

Part IX – Administrative Requirements

On the basis of preliminary staff review and the application of applicable standards and regulations, the Department, as administrative agent for the Missouri Clean Water Commission, proposes to issue a permit(s) subject to certain effluent limitations, schedules, and special conditions contained herein and within the operating permit. The proposed determinations are tentative pending public comment.

PERMIT SYNCHRONIZATION:
The Department of Natural Resources is currently undergoing a synchronization process for operating permits. Permits are normally issued on a five-year term, but to achieve synchronization many permits will need to be issued for less than the full five years allowed by regulation. The intent is that all permits within a watershed will move through the Watershed Based Management (WBM) cycle together will all expire in the same fiscal year. This will allow further streamlining by placing multiple permits within a smaller geographic area on public notice simultaneously, thereby reducing repeated administrative efforts. This will also allow the Department to explore a watershed based permitting effort at some point in the future. Renewal applications must continue to be submitted within 180 days of expiration, however, in instances where effluent data from the previous renewal is less than 4 years old, that data may be re-submitted to meet the requirements of the renewal application. If the permit provides a schedule of compliance for meeting new water quality based effluent limits beyond the expiration date of the permit, the time remaining in the schedule of compliance will be allotted in the renewed permit.

PUBLIC NOTICE:
The Department shall give public notice that a draft permit has been prepared and its issuance is pending. Additionally, public notice will be issued if a public hearing is to be held because of a significant degree of interest in and water quality concerns related to a draft permit. No public notice is required when a request for a permit modification or termination is denied; however, the requester and permittee must be notified of the denial in writing. The Department must issue public notice of a pending operating permit or of a new or reissued statewide general permit. The public comment period is the length of time not less than 30 days following the date of the public notice which interested persons may submit written comments about the proposed permit. For persons wanting to submit comments regarding this proposed operating permit, then please refer to the Public Notice page located at the front of this draft operating permit. The Public Notice page gives direction on how and where to submit appropriate comments.

☒ - The Public Notice period for this operating permit was from August 19, 2016 to September 19, 2016. No responses received.

DATE OF FACT SHEET: JUNE 29, 2016

COMPLETED BY:

FORREST LINDSEY, ENVIRONMENTAL SPECIALIST
MISSOURI DEPARTMENT OF NATURAL RESOURCES
WATER PROTECTION PROGRAM
OPERATING PERMITS SECTION - DOMESTIC WASTEWATER UNIT
(573) 526-1289
Forrest.Lindsey@dnr.mo.gov

STANDARD CONDITIONS FOR NPDES PERMITS
ISSUED BY
THE MISSOURI DEPARTMENT OF NATURAL RESOURCES
MISSOURI CLEAN WATER COMMISSION
REVISED
AUGUST 1, 2014

These Standard Conditions incorporate permit conditions as required by 40 CFR 122.41 or other applicable state statutes or regulations. These minimum conditions apply unless superseded by requirements specified in the permit.

Part I – General Conditions
Section A – Sampling, Monitoring, and Recording

1. **Sampling Requirements.**
   a. Samples and measurements taken for the purpose of monitoring shall be representative of the monitored activity.
   b. All samples shall be taken at the outfall(s) or Missouri Department of Natural Resources (Department) approved sampling location(s), and unless specified, before the effluent joins or is diluted by any other body of water or substance.

2. **Monitoring Requirements**.
   a. Records of monitoring information shall include:
      i. The date, exact place, and time of sampling or measurements;
      ii. The individual(s) who performed the sampling or measurements;
      iii. The date(s) analyses were performed;
      iv. The individual(s) who performed the analyses;
      v. The analytical techniques or methods used; and
      vi. The results of such analyses.
   b. If the permittee monitors any pollutant more frequently than required by the permit at the location specified in the permit using test procedures approved under 40 CFR Part 136, or another method required for an industry-specific waste stream under 40 CFR subchapters N or O, the results of such monitoring shall be included in the calculation and reported to the Department with the discharge monitoring report data (DMR) submitted to the Department pursuant to Section B, paragraph 7.

3. **Sample and Monitoring Calculations.** Calculations for all sample and monitoring results which require averaging of measurements shall utilize an arithmetic mean unless otherwise specified in the permit.

4. **Test Procedures**. The analytical and sampling methods used shall conform to the reference methods listed in 10 CSR 20-7.015 unless alternates are approved by the Department. The facility shall use sufficiently sensitive analytical methods for detecting, identifying, and measuring the concentrations of pollutants. The facility shall ensure that the selected methods are able to quantify the presence of pollutants in a given discharge at concentrations that are low enough to determine compliance with Water Quality Standards in 10 CSR 20-7.031 or effluent limitations unless provisions in the permit allow for other alternatives. A method is "sufficiently sensitive" when; 1) the method minimum level is at or below the level of the applicable water quality criterion for the pollutant or, 2) the method minimum level is above the applicable water quality criterion, but the amount of pollutant in a facility's discharge is high enough that the method detects and quantifies the level of pollutant in the discharge, or 3) the method has the lowest minimum level of the analytical methods approved under 10 CSR 20-7.015. These methods are also required for parameters that are listed as monitoring only, as the data collected may be used to determine if limitations need to be established. A permittee is responsible for working with their contractors to ensure that the analysis performed is sufficiently sensitive.

5. **Record Retention.** Except for records of monitoring information required by the permit related to the permittee's sewage sludge use and disposal activities, which shall be retained for a period of at least five (5) years (or longer as required by 40 CFR part 503), the permittee shall retain records of all monitoring information, including all calibration and maintenance records and all original strip chart recordings for continuous monitoring instrumentation, copies of all reports required by the permit, and records of all data used to complete the application for the permit, for a period of at least three (3) years from the date of the sample, measurement, report or application. This period may be extended by request of the Department at any time.

6. **Illegal Activities.**
   a. The Federal Clean Water Act provides that any person who falsifies, tampers with, or knowingly renders inaccurate any monitoring device or method required to be maintained under the permit shall, upon conviction, be punished by a fine of not more than $10,000, or by imprisonment for not more than two (2) years, or both. If a conviction of a person is for a violation committed after a first conviction of such person under this paragraph, punishment is a fine of not more than $20,000 per day of violation, or by imprisonment of not more than four (4) years, or both.
   b. The Missouri Clean Water Law provides that any person or who falsifies, tampers with, or knowingly renders inaccurate any monitoring device or method required to be maintained pursuant to sections 644.006 to 644.141 shall, upon conviction, be punished by a fine of not more than $10,000, or by imprisonment for not more than six (6) months, or by both. Second and successive convictions for violation under this paragraph by any person shall be punished by a fine of not more than $50,000 per day of violation, or by imprisonment for not more than two (2) years, or both.

Section B – Reporting Requirements

1. **Planned Changes.**
   a. The permittee shall give notice to the Department as soon as possible of any planned physical alterations or additions to the permitted facility when:
      i. The alteration or addition to a permitted facility may meet one of the criteria for determining whether a facility is a new source in 40 CFR 122.29(b); or
      ii. The alteration or addition could significantly change the nature or increase the quantity of pollutants discharged. This notification applies to pollutants which are subject neither to effluent limitations in the permit, nor to notification requirements under 40 CFR 122.42;
      iii. The alteration or addition results in a significant change in the permittee's sludge use or disposal practices, and such alteration, addition, or change may justify the application of permit conditions that are different from or absent in the existing permit, including notification of additional use or disposal sites not reported during the permit application process or not reported pursuant to an approved land application plan;
      iv. Any facility expansions, production increases, or process modifications which will result in a new or substantially different discharge or sludge characteristics must be reported to the Department 60 days before the facility or process modification begins. Notification may be accomplished by application for a new permit. If the discharge does not violate effluent limitations specified in the permit, the facility is to submit a notice to the Department of the changed discharge at least 30 days before such changes. The Department may require a construction permit and/or permit modification as a result of the proposed changes at the facility.

2. **Non-compliance Reporting.**
   a. The permittee shall report any noncompliance which may endanger health or the environment. Relevant information shall be provided orally or via the current electronic method approved by the Department, within 24 hours from the time the permittee becomes aware of the circumstances, and shall be reported to the appropriate Regional Office during normal business hours or the Environmental Emergency Response hotline at 573-634-2436 outside of normal business hours. A written submission shall also be provided within five (5) business days of the time the permittee becomes aware of the circumstances. The written submission shall contain a description of the noncompliance and its cause; the period of noncompliance, including exact dates and times, and if the noncompliance has not been corrected, the anticipated time it is expected to continue; and steps taken or planned to reduce, eliminate, and prevent reoccurrence of the noncompliance.

b. The following shall be included as information which must be reported within 24 hours under this paragraph.
   i. Any unanticipated bypass which exceeds any effluent limitation in the permit.
   ii. Any upset which exceeds any effluent limitation in the permit.
   iii. Violation of a maximum daily discharge limitation for any of the pollutants listed by the Department in the permit required to be reported within 24 hours.
c. The Department may waive the written report on a case-by-case basis for reports under paragraph 2. b. of this section if the oral report has been received within 24 hours.

3. **Anticipated Noncompliance**. The permittee shall give advance notice to the Department of any planned changes in the permitted facility or activity which may result in noncompliance with permit requirements. The notice shall be submitted to the Department 60 days prior to such changes or activity.

4. **Compliance Schedules.** Reports of compliance or noncompliance with, or any progress reports on, interim and final requirements contained in any compliance schedule of the permit shall be submitted no later than 14 days following each schedule date. The report shall provide an explanation for the instance of noncompliance and a proposed schedule or anticipated date, for achieving compliance with the compliance schedule requirement.

5. **Other Noncompliance.** The permittee shall report all instances of noncompliance not reported under paragraphs 2, 3, and 6 of this section, at the time monitoring reports are submitted. The reports shall contain the information listed in paragraph 2. a. of this section.

6. **Other Information**. Where the permittee becomes aware that it failed to submit any relevant facts in a permit application, or submitted incorrect information in a permit application or in any report to the Department, it shall promptly submit such facts or information.

7. **Discharge Monitoring Reports.**
   a. Monitoring results shall be reported at the intervals specified in the permit.
   b. Monitoring results must be reported to the Department via the current method approved by the Department, unless the permittee has been granted a waiver from using the method. If the permittee has been granted a waiver, the permittee must use forms provided by the Department.
   c. Monitoring results shall be reported to the Department no later than the 28th day of the month following the end of the reporting period.

Section C – Bypass/Upset Requirements

1. **Definitions.**
   a. *Bypass*: the intentional diversion of waste streams from any portion of a treatment facility, except in the case of blending.
   b. *Severe Property Damage*: substantial physical damage to property, damage to the treatment facilities which causes them to become inoperable, or substantial and permanent loss of natural resources which can reasonably be expected to occur in the absence of a bypass. Severe property damage does not mean economic loss caused by delays in production.
   c. *Upset*: an exceptional incident in which there is unintentional and temporary noncompliance with technology based permit effluent limitations because of factors beyond the reasonable control of the permittee. An upset does not include noncompliance to the extent caused by operational error, improperly designed treatment facilities, inadequate treatment facilities, lack of preventive maintenance, or careless or improper operation.

2. **Bypass Requirements.**
   a. Bypass not exceeding limitations. The permittee may allow any bypass to occur which does not cause effluent limitations to be exceeded, but only if it also is for essential maintenance to assure efficient operation. These bypasses are not subject to the provisions of paragraphs 2. b. and 2. c. of this section.
   b. Notice.
      i. Anticipated bypass. If the permittee knows in advance of the need for a bypass, it shall submit prior notice, if possible at least 10 days before the date of the bypass.
      ii. Unanticipated bypass. The permittee shall submit notice of an unanticipated bypass as required in Section B – Reporting Requirements, paragraph 5 (24-hour notice).
   c. Prohibition of bypass.
      i. Bypass is prohibited, and the Department may take enforcement action against a permittee for bypass, unless:
         1. Bypass was unavoidable to prevent loss of life, personal injury, or severe property damage;
         2. There were no feasible alternatives to the bypass, such as the use of auxiliary treatment facilities, retention of untreated wastes, or maintenance during normal periods of equipment downtime. This condition is not satisfied if adequate back-up equipment should have been installed in the exercise of reasonable engineering judgment to prevent a bypass which occurred during normal periods of equipment downtime or preventive maintenance; and
         3. The permittee submitted notices as required under paragraph 2. b. of this section.
      ii. The Department may approve an anticipated bypass, after considering its adverse effects, if the Department determines that it will meet the three (3) conditions listed above in paragraph 2. c. i. of this section.

3. **Upset Requirements.**
   a. Effect of an upset. An upset constitutes an affirmative defense to an action brought for noncompliance with such technology based permit effluent limitations if the requirements of paragraph 3. b. of this section are met. No determination made during administrative review of claims that noncompliance was caused by upset, and before an action for noncompliance, is final administrative action subject to judicial review.
   b. Conditions necessary for a demonstration of upset. A permittee who wishes to establish the affirmative defense of upset shall demonstrate, through properly signed, contemporaneous operating logs, or other relevant evidence that:
      i. An upset occurred and that the permittee can identify the cause(s) of the upset;
      ii. The permitted facility was at the time being properly operated; and
      iii. The permittee submitted notice of the upset as required in Section B – Reporting Requirements, paragraph 2. b. ii. (24-hour notice).
      iv. The permittee complied with any remedial measures required under Section D – Administrative Requirements, paragraph 4.
   c. Burden of proof. In any enforcement proceeding, the permittee seeking to establish the occurrence of an upset has the burden of proof.

Section D – Administrative Requirements

1. **Duty to Comply.** The permittee must comply with all conditions of this permit. Any permit noncompliance constitutes a violation of the Missouri Clean Water Law and Federal Clean Water Act and is grounds for enforcement action; for permit termination, revocation and reissuance, or modification; or denial of a permit renewal application.
   a. The permittee shall comply with effluent standards or prohibitions established under section 307(a) of the Federal Clean Water Act for toxic pollutants and with standards for sewage sludge use or disposal established under section 405(d) of the CWA within the time provided in the regulations that establish these standards or prohibitions or standards for sewage sludge use or disposal, even if the permit has not yet been modified to incorporate the requirement.
   b. The Federal Clean Water Act provides that any person who violates section 301, 302, 306, 307, 308, 318 or 405 of the Act, or any permit condition or limitation implementing any such sections in a permit issued under section 402, or any requirement imposed in a pretreatment program approved under sections 402(a)(3) or 402(b)(8) of the Act, is subject to a civil penalty not to exceed $25,000 per day for each violation. The Federal Clean Water Act provides that any person who negligently violates sections 301, 302, 306, 307, 308, 318, or 405 of the Act, or any condition or limitation implementing any of such sections in a permit issued under section 402 of the Act, or any requirement

imposed in a pretreatment program approved under section 402(a)(3) or 402(b)(8) of the Act, is subject to criminal penalties of $2,500 to $25,000 per day of violation, or imprisonment of not more than one (1) year, or both. In the case of a second or subsequent conviction for a negligent violation, a person shall be subject to criminal penalties of not more than $50,000 per day of violation, or by imprisonment of not more than two (2) years, or both. Any person who knowingly violates such sections, or such conditions or limitations is subject to criminal penalties of $5,000 to $50,000 per day of violation, or imprisonment for not more than three (3) years, or both. In the case of a second or subsequent conviction for a knowing violation, a person shall be subject to criminal penalties of not more than $100,000 per day of violation, or imprisonment of not more than six (6) years, or both. Any person who knowingly violates section 301, 302, 303, 306, 307, 308, 318 or 405 of the Act, or any permit condition or limitation implementing any of such sections in a permit issued under section 402 of the Act, and who knows at that time that he thereby places another person in imminent danger of death or serious bodily injury, shall, upon conviction, be subject to a fine of not more than $250,000 or imprisonment of not more than 15 years, or both. In the case of a second or subsequent conviction for a knowing endangerment violation, a person shall be subject to a fine of not more than $500,000 or by imprisonment of not more than 30 years, or both. An organization, as defined in section 309(c)(3)(B)(iii) of the CWA, shall, upon conviction of violating the imminent danger provision, be subject to a fine of not more than $1,000,000 and can be fined up to $2,000,000 for second or subsequent convictions.

c. Any person may be assessed an administrative penalty by the EPA Director for violating section 301, 302, 306, 307, 308, 318 or 405 of this Act, or any permit condition or limitation implementing any of such sections in a permit issued under section 402 of this Act. Administrative penalties for Class I violations are not to exceed $10,000 per violation, with the maximum amount of any Class I penalty assessed not to exceed $25,000. Penalties for Class II violations are not to exceed $10,000 per day for each day during which the violation continues, with the maximum amount of any Class II penalty not to exceed $125,000.

d. It is unlawful for any person to cause or permit any discharge of water contaminants from any water contaminant or point source located in Missouri in violation of sections 644.006 to 644.141 of the Missouri Clean Water Law, or any standard, rule or regulation promulgated by the commission. In the event the commission or the director determines that any provision of sections 644.006 to 644.141 of the Missouri Clean Water Law or standard, rules, limitations or regulations promulgated pursuant thereto, or permits issued by, or any final abatement order, other order, or determination made by the commission or the director, or any filing requirement pursuant to sections 644.006 to 644.141 of the Missouri Clean Water Law or any other provision which this state is required to enforce pursuant to any federal water pollution control act, is being, was, or is in imminent danger of being violated, the commission or director may cause to have instituted a civil action in any court of competent jurisdiction for the injunctive relief to prevent any such violation or further violation or for the assessment of a penalty not to exceed $10,000 per day for each day, or part thereof, the violation occurred and continues to occur, or both, as the court deems proper. Any person who willfully or negligently commits any violation in this paragraph shall, upon conviction, be punished by a fine of not less than $2,500 nor more than $25,000 per day of violation, or by imprisonment for not more than one year, or both. Second and successive convictions for violation of the same provision of this paragraph by any person shall be punished by a fine of not more than $50,000 per day of violation, or by imprisonment for not more than two (2) years, or both.

2. **Duty to Reapply.**
   a. If the permittee wishes to continue an activity regulated by this permit after the expiration date of this permit, the permittee must apply for and obtain a new permit.
   b. A permittee with a currently effective site-specific permit shall submit an application for renewal at least 180 days before the expiration date of the existing permit, unless permission for a later date has been granted by the Department. (The Department shall not grant permission for applications to be submitted later than the expiration date of the existing permit.)
   c. A permittees with currently effective general permit shall submit an application for renewal at least 30 days before the existing permit expires, unless the permittee has been notified by the Department that an earlier application must be made. The Department may grant permission for a later submission date. (The Department shall not grant permission for applications to be submitted later than the expiration date of the existing permit.)

3. **Need to Halt or Reduce Activity Not a Defense.** It shall not be a defense for a permittee in an enforcement action that it would have been necessary to halt or reduce the permitted activity in order to maintain compliance with the conditions of this permit.

4. **Duty to Mitigate.** The permittee shall take all reasonable steps to minimize or prevent any discharge or sludge use or disposal in violation of this permit which has a reasonable likelihood of adversely affecting human health or the environment.

5. **Proper Operation and Maintenance**. The permittee shall at all times properly operate and maintain all facilities and systems of treatment and control (and related appurtenances) which are installed or used by the permittee to achieve compliance with the conditions of this permit. Proper operation and maintenance also includes adequate laboratory controls and appropriate quality assurance procedures. This provision requires the operation of back-up or auxiliary facilities or similar systems which are installed by a permittee only when the operation is necessary to achieve compliance with the conditions of the permit.

6. **Permit Actions.**
   a. Subject to compliance with statutory requirements of the Law and Regulations and applicable Court Order, this permit may be modified, suspended, or revoked in whole or in part during its term for cause including, but not limited to, the following:
      i. Violations of any terms or conditions of this permit or the law;
      ii. Having obtained this permit by misrepresentation or failure to disclose fully any relevant facts;
      iii. A change in any circumstances or conditions that requires either a temporary or permanent reduction or elimination of the authorized discharge; or
      iv. Any reason set forth in the Law or Regulations.
   b. The filing of a request by the permittee for a permit modification, revocation and reissuance, or termination, or a notification of planned changes or anticipated noncompliance does not stay any permit condition.

7. **Permit Transfer.**
   a. Subject to 10 CSR 20-6.010, an operating permit may be transferred upon submission to the Department of an application to transfer signed by the existing owner and the new owner, unless prohibited by the terms of the permit. Until such time the permit is officially transferred, the original permittee remains responsible for complying with the terms and conditions of the existing permit.
   b. The Department may require modification or revocation and reissuance of the permit to change the name of the permittee and incorporate such other requirements as may be necessary under the Missouri Clean Water Law or the Federal Clean Water Act.
   c. The Department, within 30 days of receipt of the application, shall notify the new permittee of its intent to revoke or reissue or transfer the permit.

8. **Toxic Pollutants.** The permittee shall comply with effluent standards or prohibitions established under section 307(a) of the Federal Clean Water Act for toxic pollutants and with standards for sewage sludge use or disposal established under section 405(d) of the Federal Clean Water Act within the time provided in the regulations that establish these standards or prohibitions or standards for sewage sludge use or disposal, even if the permit has not yet been modified to incorporate the requirement.

9. **Property Rights.** This permit does not convey any property rights of any sort, or any exclusive privilege.

10. **Duty to Provide Information.** The permittee shall furnish to the Department, within a reasonable time, any information which the Department may request to determine whether cause exists for modifying, revoking and reissuing, or terminating this permit or to determine compliance with this permit. The permittee shall also furnish to the Department upon request, copies of records required to be kept by this permit.

11. **Inspection and Entry.** The permittee shall allow the Department, or an authorized representative (including an authorized contractor acting as a representative of the Department), upon presentation of credentials and other documents as may be required by law, to:
    a. Enter upon the permittee's premises where a regulated facility or activity is located or conducted, or where records must be kept under the conditions of the permit;
    b. Have access to and copy, at reasonable times, any records that must be kept under the conditions of this permit;
    c. Inspect at reasonable times any facilities, equipment (including monitoring and control equipment), practices, or operations regulated or required under this permit; and
    d. Sample or monitor at reasonable times, for the purposes of assuring permit compliance or as otherwise authorized by the Federal Clean Water Act or Missouri Clean Water Law, any substances or parameters at any location.

12. **Closure of Treatment Facilities.**
    a. Persons who cease operation or plan to cease operation of waste, wastewater, and sludge handling and treatment facilities shall close the facilities in accordance with a closure plan approved by the Department.
    b. Operating Permits under 10 CSR 20-6.010 or under 10 CSR 20-6.015 are required until all waste, wastewater, and sludges have been disposed of in accordance with the closure plan approved by the Department and any disturbed areas have been properly stabilized. Disturbed areas will be considered stabilized when perennial vegetation, pavement, or structures using permanent materials cover all areas that have been disturbed. Vegetative cover, if used, shall be at least 70% plant density over 100% of the disturbed area.

13. **Signatory Requirement.**
    a. All permit applications, reports required by the permit, or information requested by the Department shall be signed and certified. (See 40 CFR 122.22 and 10 CSR 20-6.010)
    b. The Federal Clean Water Act provides that any person who knowingly makes any false statement, representation, or certification in any record or other document submitted or required to be maintained under this permit, including monitoring reports or reports of compliance or non-compliance shall, upon conviction, be punished by a fine of not more than $10,000 per violation, or by imprisonment for not more than six (6) months per violation, or by both.
    c. The Missouri Clean Water Law provides that any person who knowingly makes any false statement, representation or certification in any application, record, report, plan, or other document filed or required to be maintained pursuant to sections 644.006 to 644.141 shall, upon conviction, be punished by a fine of not more than ten thousand dollars, or by imprisonment for not more than six months, or by both.

14. **Severability.** The provisions of the permit are severable, and if any provision of the permit, or the application of any provision of the permit to any circumstance, is held invalid, the application of such provision to other circumstances, and the remainder of the permit, shall not be affected thereby.

STANDARD CONDITIONS FOR NPDES PERMITS
ISSUED BY
THE MISSOURI DEPARTMENT OF NATURAL RESOURCES
MISSOURI CLEAN WATER COMMISSION
March 1, 2015

PART III – SLUDGE AND BIOSOLIDS FROM DOMESTIC AND INDUSTRIAL WASTEWATER TREATMENT FACILITIES

SECTION A – GENERAL REQUIREMENTS

1. This permit pertains to sludge requirements under the Missouri Clean Water Law and regulation for domestic wastewater and industrial process wastewater. This permit also incorporates applicable federal sludge disposal requirements under 40 CFR 503 for domestic wastewater. The Environmental Protection Agency (EPA) has principal authority for permitting and enforcement of the federal sludge regulations under 40 CFR 503 for domestic wastewater. EPA has reviewed and accepted these standard sludge conditions. EPA may choose to issue a separate sludge addendum to this permit or a separate federal sludge permit at their discretion to further address the federal requirements.
2. These PART III Standard Conditions apply only to sludge and biosolids generated at domestic wastewater treatment facilities, including public owned treatment works (POTW), privately owned facilities and sludge or biosolids generated at industrial facilities.
3. Sludge and Biosolids Use and Disposal Practices:
    a. The permittee is authorized to operate the sludge and biosolids treatment, storage, use, and disposal facilities listed in the facility description of this permit.
    b. The permittee shall not exceed the design sludge volume listed in the facility description and shall not use sludge disposal methods that are not listed in the facility description, without prior approval of the permitting authority.
    c. The permittee is authorized to operate the storage, treatment or generating sites listed in the Facility Description section of this permit.
4. Sludge Received from other Facilities:
    a. Permittees may accept domestic wastewater sludge from other facilities including septic tank pumpings from residential sources as long as the design sludge volume is not exceeded and the treatment facility performance is not impaired.
    b. The permittee shall obtain a signed statement from the sludge generator or hauler that certifies the type and source of the sludge
5. These permit requirements do not supersede nor remove liability for compliance with county and other local ordinances.
6. These permit requirements do not supersede nor remove liability for compliance with other environmental regulations such as odor emissions under the Missouri Air Pollution Control Law and regulations.
7. This permit may (after due process) be modified, or alternatively revoked and reissued, to comply with any applicable sludge disposal standard or limitation issued or approved under Section 405(d) of the Clean Water Act or under Chapter 644 RSMo.
8. In addition to STANDARD CONDITIONS, the Department may include sludge limitations in the special conditions portion or other sections of a site specific permit.
9. Alternate Limits in the Site Specific Permit.
   Where deemed appropriate, the Department may require an individual site specific permit in order to authorize alternate limitations:
    a. A site specific permit must be obtained for each operating location, including application sites.
    b. To request a site specific permit, an individual permit application, permit fee, and supporting documents shall be submitted for each operating location. This shall include a detailed sludge/biosolids management plan or engineering report.
10. Exceptions to these Standard Conditions may be authorized on a case-by-case basis by the Department, as follows:
    a. The Department will prepare a permit modification and follow permit notice provisions as applicable under 10 CSR 20-6.020, 40 CFR 124.10, and 40 CFR 501.15(a)(2)(ix)(E). This includes notification of the owner of the property located adjacent to each land application site, where appropriate.
    b. Exceptions cannot be granted where prohibited by the federal sludge regulations under 40 CFR 503.

SECTION B – DEFINITIONS

1. Best Management Practices include agronomic loading rates, soil conservation practices and other site restrictions.
2. Biosolids means organic fertilizer or soil amendment produced by the treatment of domestic wastewater sludge.
3. Biosolids land application facility is a facility where biosolids are spread onto the land at agronomic rates for production of food or fiber. The facility includes any structures necessary to store the biosolids until soil, weather, and crop conditions are favorable for land application.
4. Class A biosolids means a material that has met the Class A pathogen reduction requirements or equivalent treatment by a Process to Further Reduce Pathogens (PFRP) in accordance with 40 CFR 503.
5. Class B biosolids means a material that has met the Class B pathogen reduction requirements or equivalent treatment by a Process to Significantly Reduce Pathogens (PFRP) in accordance with 40 CFR 503.
6. Domestic wastewater means wastewater originating from the sanitary conveniences of residences, commercial buildings, factories and institutions; or co-mingled sanitary and industrial wastewater processed by a (POTW) or a privately owned facility.
7. Industrial wastewater means any wastewater, also known as process water, not defined as domestic wastewater. Per 40 CFR Part 122, process water means any water which, during manufacturing or processing, comes into direct contact with or results from the production or use of any raw material, intermediate product, finished product, byproduct, or waste product.
8. Mechanical treatment plants are wastewater treatment facilities that use mechanical devices to treat wastewater, including septic tanks, sand filters, extended aeration, activated sludge, contact stabilization, trickling filters, rotating biological discs, and other similar facilities. It does not include wastewater treatment lagoons and constructed wetlands for wastewater treatment.
9. Operating location as defined in 10 CSR 20-2.010 is all contiguous lands owned, operated or controlled by one (1) person or by two (2) or more persons jointly or as tenants in common.
10. Plant Available Nitrogen (PAN) is the nitrogen that will be available to plants during the growing seasons after biosolids application.
11. Public contact site is land with a high potential for contact by the public. This includes, but is not limited to, public parks, ball fields, cemeteries, plant nurseries, turf farms, and golf courses.
12. Sludge is the solid, semisolid, or liquid residue removed during the treatment of wastewater. Sludge includes septage removed from septic tanks or equivalent facilities. Sludge does not include carbon coal byproducts (CCBs)
13. Sludge lagoon is part of a mechanical wastewater treatment facility. A sludge lagoon is an earthen basin that receives sludge that has been removed from a wastewater treatment facility. It does not include a wastewater treatment lagoon or sludge treatment units that are not a part of a mechanical wastewater treatment facility.
14. Septage is the material pumped from residential septic tanks and similar treatment works (with a design population of less than 150 people). The standard for biosolids from septage is different from other sludges.

SECTION C – MECHANICAL WASTEWATER TREATMENT FACILITIES

1. Sludge shall be routinely removed from wastewater treatment facilities and handled according to the permit facility description and sludge conditions of this permit.
2. The permittee shall operate the facility so that there is no sludge discharged to waters of the state.
3. Mechanical treatment plants shall have separate sludge storage compartments in accordance with 10 CSR 20, Chapter 8. Failure to remove sludge from these storage compartments on the required design schedule is a violation of this permit.

SECTION D – SLUDGE DISPOSED AT OTHER TREATMENT FACILITY OR CONTRACT HAULER

1. This section applies to permittees that haul sludge to another treatment facility for disposal or use contract haulers to remove and dispose of sludge.
2. Permittees that use contract haulers are responsible for compliance with all the terms of this permit including final disposal, unless the hauler has a separate permit for sludge or biosolids disposal issued by the Department; or the hauler transports the sludge to another permitted treatment facility.
3. Haulers who land apply septage must obtain a state permit.
4. Testing of sludge, other than total solids content, is not required if sludge is hauled to a municipal wastewater treatment facility or other permitted wastewater treatment facility, unless it is required by the accepting facility.

SECTION E – INCINERATION OF SLUDGE

1. Sludge incineration facilities shall comply with the requirements of 40 CFR 503 Subpart E; air pollution control regulations under 10 CSR 10; and solid waste management regulations under 10 CSR 80.
2. Permittee may be authorized under the facility description of this permit to store incineration ash in lagoons or ash ponds. This permit does not authorize the disposal of incineration ash. Incineration ash shall be disposed in accordance with 10 CSR 80; or if the ash is determined to be hazardous with 10 CSR 25.
3. In addition to normal sludge monitoring, incineration facilities shall report the following as part of the annual report, quantity of sludge incinerated, quantity of ash generated, quantity of ash stored, and ash used or disposal method, quantity, and location. Permittee shall also provide the name of the disposal facility and the applicable permit number.

SECTION F – SURFACE DISPOSAL SITES AND SLUDGE LAGOONS

1. Surface disposal sites of domestic facilities shall comply with the requirements in 40 CFR 503 Subpart C; air pollution control regulations under 10 CSR 10; and solid waste management regulations under 10 CSR 80.
2. Sludge storage lagoons are temporary facilities and are not required to obtain a permit as a solid waste management facility under 10 CSR 80. In order to maintain sludge storage lagoons as storage facilities, accumulated sludge must be removed routinely, but not less than once every two years unless an alternate schedule is approved in the permit. The amount of sludge removed will be dependent on sludge generation and accumulation in the facility. Enough sludge must be removed to maintain adequate storage capacity in the facility.
    a. In order to avoid damage to the lagoon seal during cleaning, the permittee may leave a layer of sludge on the bottom of the lagoon, upon prior approval of the Department; or
    b. Permittee shall close the lagoon in accordance with Section H.

SECTION G – LAND APPLICATION

1. The permittee shall not land apply sludge or biosolids unless land application is authorized in the facility description or the special conditions of the issued NPDES permit.
2. Land application sites within a 20 miles radius of the wastewater treatment facility are authorized under this permit when biosolids are applied for beneficial use in accordance with these standard conditions unless otherwise specified in a site specific permit. If the permittee's land application site is greater than a 20 mile radius of the wastewater treatment facility, approval must be granted from the Department.
3. Land application shall not adversely affect a threatened or endangered species or its designated critical habitat.
4. Biosolids shall not be applied unless authorized in this permit or exempted under 10 CSR 20, Chapter 6.
    a. This permit does not authorize the land application of domestic sludge except for when sludge meets the definition of biosolids.
    b. This permit authorizes "Class A or B" biosolids derived from domestic wastewater and/or process water sludge to be land applied onto grass land, crop land, timber or other similar agricultural or silviculture lands at rates suitable for beneficial use as organic fertilizer and soil conditioner.
5. Public Contact Sites:

    Permittees who wish to apply Class A biosolids to public contact sites must obtain approval from the Department after two years of proper operation with acceptable testing documentation that shows the biosolids meet Class A criteria. A shorter length of testing will be allowed with prior approval from the Department. Authorization for land applications must be provided in the special conditions section of this permit or in a separate site specific permit.
    a. After Class B biosolids have been land applied, public access must be restricted for 12 months.
    b. Class B biosolids are only land applied to root crops, home gardens or vegetable crops whose edible parts will not be for human consumption.
6. Agricultural and Silvicultural Sites:

    Septage – Based on Water Quality guide 422 (WQ422) published by the University of Missouri
    a. Haulers that land apply septage must obtain a state permit
    b. Do not apply more than 30,000 gallons of septage per acre per year.
    c. Septage tanks are designed to retain sludge for one to three years which will allow for a larger reduction in pathogens and vectors, as compared to other mechanical type treatment facilities.
    d. To meet Class B sludge requirements, maintain septage at 12 pH for at least thirty (30) minutes before land application. 50 pounds of hydrated lime shall be added to each 1,000 gallons of septage in order to meet pathogen and vector stabilization for septage biosolids applied to crops, pastures or timberland.
    e. Lime is to be added to the pump truck and not directly to the septic tanks, as lime would harm the beneficial bacteria of the septic tank.

Biosolids - Based on Water Quality guide 423, 424, and 425 (WQ423, WQ424, WQ425) published by the University of Missouri;

a. Biosolids shall be monitored to determine the quality for regulated pollutants

b. The number of samples taken is directly related to the amount of sludge produced by the facility (See Section I of these Standard Conditions). Report as dry weight unless otherwise specified in the site specific permit. Samples should be taken only during land application periods. When necessary, it is permissible to mix biosolids with lower concentrations of biosolids as well as other suitable Department approved material to reach the maximum concentration of pollutants allowed.

c. Table 1 gives the maximum concentration allowable to protect water quality standards

TABLE 1

Biosolids ceiling concentration [1]	
Pollutant	Milligrams per kilogram dry weight
Arsenic	75
Cadmium	85
Copper	4,300
Lead	840
Mercury	57
Molybdenum	75
Nickel	420
Selenium	100
Zinc	7,500

[1] Land application is not allowed if the sludge concentration exceeds the maximum limits for any of these pollutants

d. The low metal concentration biosolids has reduced requirements because of its higher quality and can safely be applied for 100 years or longer at typical agronomic loading rates. (See Table 2)

TABLE 2

Biosolids Low Metal Concentration [1]	
Pollutant	Milligrams per kilogram dry weight
Arsenic	41
Cadmium	39
Copper	1,500
Lead	300
Mercury	17
Nickel	420
Selenium	36
Zinc	2,800

[1] You may apply low metal biosolids without tracking cumulative metal limits, provided the cumulative application of biosolids does not exceed 500 dry tons per acre.

e. Each pollutant in Table 3 has an annual and a total cumulative loading limit, based on the allowable pounds per acre for various soil categories.

TABLE 3

Pollutant	CEC 15+		CEC 5 to 15		CEC 0 to 5	
	Annual	Total [1]	Annual	Total [1]	Annual	Total [1]
Arsenic	1.8	36.0	1.8	36.0	1.8	36.0
Cadmium	1.7	35.0	0.9	9.0	0.4	4.5
Copper	66.0	1,335.0	25.0	250.0	12.0	125.0
Lead	13.0	267.0	13.0	267.0	13.0	133.0
Mercury	0.7	15.0	0.7	15.0	0.7	15.0
Nickel	19.0	347.0	19.0	250.0	12.0	125.0
Selenium	4.5	89.0	4.5	44.0	1.6	16.0
Zinc	124.0	2,492.0	50.0	500.0	25.0	250.0

[1] Total cumulative loading limits for soils with equal or greater than 6.0 pH (salt based test) or 6.5 pH (water based test)

TABLE 4 - Guidelines for land application of other trace substances [1]

Cumulative Loading	
Pollutant	Pounds per acre
Aluminum	4,000[2]
Beryllium	100
Cobalt	50
Fluoride	800
Manganese	500
Silver	200
Tin	1,000
Dioxin	(10 ppt in soil)[3]
Other	[4]

[1] Design of land treatment systems for Industrial Waste, 1979. Michael Ray Overcash, North Carolina State University and Land Treatment of Municipal Wastewater, EPA 1981.)

[2] This applies for a soil with a pH between 6.0 and 7.0 (salt based test) or a pH between 6.5 to 7.5 (water based test). Case-by-case review is required for higher pH soils.

[3] Total Dioxin Toxicity Equivalents (TEQ) in soils, based on a risk assessment under 40 CFR 744, May 1998.

[4] Case by case review. Concentrations in sludge should not exceed the 95th percentile of the National Sewage Sludge Survey, EPA, January 2009.

Best Management Practices – Based on Water Quality guide 426 (WQ426) published by the University of Missouri

a. Use best management practices when applying biosolids.
b. Biosolids cannot discharge from the land application site
c. Biosolid application is subject to the Missouri Department of Agriculture State Milk Board concerning grazing restrictions of lactating dairy cattle.
d. Biosolid application must be in accordance with section 4 of the Endangered Species Act.
e. Do not apply more than the agronomic rate of nitrogen needed.
f. The applicator must document the Plant Available Nitrogen (PAN) loadings, available nitrogen in the soil, and crop removal when either of the following occurs: 1) When biosolids are greater than 50,000 mg/kg TN; or 2) When biosolids are land applied at an application rate greater than two dry tons per acre per year.
    i. PAN can be determined as follows and is in accordance with WQ426
    (Nitrate + nitrite nitrogen) + (organic nitrogen x 0.2) + (ammonia nitrogen x volatilization factor[1]).
    [1] Volatilization factor is 0.7 for surface application and 1 for subsurface application.
g. Buffer zones are as follows:
    i. 300 feet of a water supply well, sinkhole, lake, pond, water supply reservoir or water supply intake in a stream;
    ii. 300 feet of a losing stream, no discharge stream, stream stretches designated for whole body contact recreation, wild and scenic rivers, Ozark National Scenic Riverways or outstanding state resource waters as listed in the Water Quality Standards, 10 CSR 20-7.031;
    iii. 150 feet if dwellings;
    iv. 100 feet of wetlands or permanent flowing streams;
    v. 50 feet of a property line or other waters of the state, including intermittent flowing streams.
h. Slope limitation for application sites are as follows;
    i. A slope 0 to 6 percent has no rate limitation
    ii. Applied to a slope 7 to 12 percent, the applicator may apply biosolids when soil conservation practices are used to meet the minimum erosion levels
    iii. Slopes > 12 percent, apply biosolids only when grass is vegetated and maintained with at least 80 percent ground cover at a rate of two dry tons per acre per year or less.
i. No biosolids may be land applied in an area that it is reasonably certain that pollutants will be transported into waters of the state.
j. Do not apply biosolids to sites with soil that is snow covered, frozen or saturated with liquid without prior approval by the Department.
k. Biosolids / sludge applicators must keep detailed records up to five years.

SECTION H – CLOSURE REQUIREMENTS

1. This section applies to all wastewater facilities (mechanical, industrial, and lagoons) and sludge or biosolids storage and treatment facilities and incineration ash ponds. It does not apply to land application sites.
2. Permittees of a domestic wastewater facility who plan to cease operation must obtain Department approval of a closure plan which addresses proper removal and disposal of all residues, including sludge, biosolids. Mechanical plants, sludge lagoons, ash ponds and other storage structures must obtain approval of a closure plan from the Department. Permittee must maintain this permit until the facility is closed in accordance with the approved closure plan per 10 CSR 20 – 6. 010 and 10 CSR 20 – 6.015.
3. Residuals that are left in place during closure of a lagoon or earthen structure or ash pond shall not exceed the agricultural loading rates as follows:
    a. Residuals shall meet the monitoring and land application limits for agricultural rates as referenced in Section H of these standard conditions.
    b. If a wastewater treatment lagoon has been in operation for 15 years or more without sludge removal, the sludge in the lagoon qualifies as a Class B biosolids with respect to pathogens due to anaerobic digestion, and testing for fecal coliform is not required. For other lagoons, testing for fecal coliform is required to show compliance with Class B biosolids limitations. In order to reach Class B biosolids requirements, fecal coliform must be less than 2,000,000 colony forming units or 2,000,000 most probable number. All fecal samples must be presented as geometric mean per gram.
    c. The allowable nitrogen loading that may be left in the lagoon shall be based on the plant available nitrogen (PAN) loading. For a grass cover crop, the allowable PAN is 300 pounds/acre.
        i. PAN can be determined as follows:

        (Nitrate + nitrite nitrogen) + (organic nitrogen x 0.2) + (ammonia nitrogen x volatilization factor[1]).

        [1] Volatilization factor is 0.7 for surface application and 1 for subsurface application.
4. When closing a domestic wastewater treatment lagoon with a design treatment capacity equal or less than 150 persons, the residuals are considered "septage" under the similar treatment works definition. See Section B of these standard conditions. Under the septage category, residuals may be left in place as follows:
    a. Testing for metals or fecal coliform is not required
    b. If the wastewater treatment lagoon has been in use for less than 15 years, mix lime with the sludge at a rate of 50 pounds of hydrated lime per 1000 gallons (134 cubic feet) of sludge.
    c. The amount of sludge that may be left in the lagoon shall be based on the plant available nitrogen (PAN) loading. 100 dry tons/acre of sludge may be left in the basin without testing for nitrogen. If 100 dry tons/acre or more will be left in the lagoon, test for nitrogen and determine the PAN using the calculation above. Allowable PAN loading is 300 pounds/acre.
5. Residuals left within the domestic lagoon shall be mixed with soil on at least a 1 to 1 ratio, the lagoon berm shall be demolished, and the site shall be graded and contain ≥70% vegetative density over 100% of the site so as to avoid ponding of storm water and provide adequate surface water drainage without creating erosion.
6. Lagoons and/or earthen structure and/or ash pond closure activities shall obtain a storm water permit for land disturbance activities that equal or exceed one acre in accordance with 10 CSR 20-6.200
7. When closing a mechanical wastewater and/or industrial process wastewater plant; all sludge must be cleaned out and disposed of in accordance with the Department approved closure plan before the permit for the facility can be terminated.
    a. Land must be stabilized which includes any grading, alternate use or fate upon approval by the Department, remediation, or other work that exposes sediment to stormwater per 10 CSR 20-6.200. The site shall be graded and contain ≥70% vegetative density over 100% of the site, so as to avoid ponding of storm water and provide adequate surface water drainage without creating erosion.
    b. Per 10 CSR 20-6.015(4)(B)6, Hazardous Waste shall not be land applied or disposed during industrial and mechanical plant closures unless in accordance with Missouri Hazardous Waste Management Law and Regulations under 10 CSR 25.
    c. After demolition of the mechanical plant / industrial plant, the site must only contain clean fill defined in RSMo 260.200 (5) as uncontaminated soil, rock, sand, gravel, concrete, asphaltic concrete, cinderblocks, brick, minimal amounts of wood and metal, and inert solids as approved by rule or policy of the Department for fill or other beneficial use. Other solid wastes must be removed.
8. If sludge from the domestic lagoon or mechanical treatment plant exceeds agricultural rates under Section G and/or H, a landfill permit or solid waste disposal permit must be obtained if the permittee chooses to seek authorization for on-site sludge disposal under the Missouri Solid Waste Management Law and regulations per 10 CSR 80, and the permittee must comply with the surface disposal requirements under 40 CFR 503, Subpart C.

SECTION I – MONITORING FREQUENCY

1. At a minimum, sludge or biosolids shall be tested for volume and percent total solids on a frequency that will accurately represent sludge quantities produced and disposed. Please see the table below.

TABLE 5

Design Sludge Production (dry tons per year)	Monitoring Frequency (See Notes 1, 2, and 3)			
	Metals, Pathogens and Vectors	Nitrogen TKN [1]	Nitrogen PAN [2]	Priority Pollutants and TCLP [3]
0 to 100	1 per year	1 per year	1 per month	1 per year
101 to 200	biannual	biannual	1 per month	1 per year
201 to 1,000	quarterly	quarterly	1 per month	1 per year
1,001 to 10,000	1 per month	1 per month	1 per week	--[4]
10,001 +	1 per week	1 per week	1 per day	--[4]

[1] Test total Kjeldahl nitrogen, if biosolids application is 2 dry tons per acre per year or less.
[2] Calculate plant available nitrogen (PAN) when either of the following occurs: 1) when biosolids are greater than 50,000 mg/kg TN; or 2) when biosolids are land applied at an application rate greater than two dry tons per acre per year.
[3] Priority pollutants (40 CFR 122.21, Appendix D, Tables II and III) and toxicity characteristic leaching procedure (40 CFR 261.24) is required only for permit holders that must have a pre-treatment program.
[4] One sample for each 1,000 dry tons of sludge.

Note 1: Total solids: A grab sample of sludge shall be tested one per day during land application periods for percent total solids. This data shall be used to calculate the dry tons of sludge applied per acre.
Note 2: Total Phosphorus: Total phosphorus and total potassium shall be tested at the same monitoring frequency as metals.
Note 3: Table 5 is not applicable for incineration and permit holders that landfill their sludge.

2. If you own a wastewater treatment lagoon or sludge lagoon that is cleaned out once a year or less, you may choose to sample only when the sludge is removed or the lagoon is closed. Test one composite sample for each 100 dry tons of sludge or biosolids removed from the lagoon during the year within the lagoon at closing. Composite sample must represent various areas at one-foot depth.
3. Additional testing may be required in the special conditions or other sections of the permit. Permittees receiving industrial wastewater may be required to conduct additional testing upon request from the Department.
4. At this time, the Department recommends monitoring requirements shall be performed in accordance with, "POTW Sludge Sampling and Analysis Guidance Document," United States Environmental Protection Agency, August 1989, and the subsequent revisions.

SECTION J – RECORD KEEPING AND REPORTING REQUIREMENTS

1. The permittee shall maintain records on file at the facility for at least five years for the items listed in these standard conditions and any additional items in the Special Conditions section of this permit. This shall include dates when the sludge facility is checked for proper operation, records of maintenance and repairs and other relevant information.
2. Reporting period
   a. By January 28th of each year, an annual report shall be submitted for the previous calendar year period for all mechanical wastewater treatment facilities, sludge lagoons, and sludge or biosolids disposal facilities.
   b. Permittees with wastewater treatment lagoons shall submit the above annual report only when sludge or biosolids are removed from the lagoon during the report period or when the lagoon is closed.
3. Report Forms. The annual report shall be submitted on report forms provided by the Department or equivalent forms approved by the Department.
4. Reports shall be submitted as follows:

   Major facilities (those serving 10,000 persons or 1 million gallons per day) shall report to both the Department and EPA. Other facilities need to report only to the Department. Reports shall be submitted to the addresses listed as follows:

   DNR regional office listed in your permit
   (see cover letter of permit)
   ATTN: Sludge Coordinator

   EPA Region VII
   Water Compliance Branch (WACM)
   Sludge Coordinator
   11201 Renner Blvd.
   Lenexa, KS 66219

5. Annual report contents. The annual report shall include the following:
    a. Sludge and biosolids testing performed. Include a copy or summary of all test results, even if not required by the permit.
    b. Sludge or biosolids quantity shall be reported as dry tons for quantity generated by the wastewater treatment facility, the quantity stored on site at the end of the year, and the quantity used or disposed.
    c. Gallons and % solids data used to calculate the dry ton amounts.
    d. Description of any unusual operating conditions.
    e. Final disposal method, dates, and location, and person responsible for hauling and disposal.
        i. This must include the name, address for the hauler and sludge facility. If hauled to a municipal wastewater treatment facility, sanitary landfill, or other approved treatment facility, give the name of that facility.
        ii. Include a description of the type of hauling equipment used and the capacity in tons, gallons, or cubic feet.
    f. Contract Hauler Activities:
    If contract hauler, provide a copy of a signed contract from the contractor. Permittee shall require the contractor to supply information required under this permit for which the contractor is responsible. The permittee shall submit a signed statement from the contractor that he has complied with the standards contained in this permit, unless the contract hauler has a separate sludge or biosolids use permit.
    g. Land Application Sites:
        i. Report the location of each application site, the annual and cumulative dry tons/acre for each site, and the landowners name and address. The location for each spreading site shall be given as a legal description for nearest ¼, ¼, Section, Township, Range, and county, or UTM coordinates. The facility shall report PAN when either of the following occurs: 1) When biosolids are greater than 50,000 mg/kg TN; or 2) when biosolids are land applied at an application rate greater than two dry tons per acre per year.
        ii. If the “Low Metals” criteria are exceeded, report the annual and cumulative pollutant loading rates in pounds per acre for each applicable pollutant, and report the percent of cumulative pollutant loading which has been reached at each site.
        iii. Report the method used for compliance with pathogen and vector attraction requirements.
        iv. Report soil test results for pH, CEC, and phosphorus. If none was tested during the year, report the last date when tested and results.

MISSOURI DEPARTMENT OF NATURAL RESOURCES
WATER PROTECTION PROGRAM

FORM B: APPLICATION FOR OPERATING PERMIT FOR FACILITIES THAT RECEIVE PRIMARILY DOMESTIC WASTE AND HAVE A DESIGN FLOW LESS THAN OR EQUAL TO 100,000 GALLONS PER DAY

FOR AGENCY USE ONLY	
CHECK NUMBER	
DATE RECEIVED 3/15/16	FEE SUBMITTED

RECEIVED MAR 7 2016 KANSAS CITY REGIONAL OFFICE

READ THE ACCOMPANYING INSTRUCTIONS BEFORE COMPLETING THIS FORM

1. THIS APPLICATION IS FOR:

☐ An operating permit for a new or unpermitted facility. Construction Permit # _____
(Include completed antidegradation review or request for antidegradation review, see instructions)

☐ A new site-specific operating permit formerly general permit #MOG _____

☑ A site-specific operating permit renewal: Permit #MO- 0116556 Expiration Date 09/30/2016

☐ A site-specific operating permit modification: Permit #MO- _____ Reason: _____

☐ General permit (MOGD – Non POTWs discharging < 50,000 GPD *or* MOG823 – Land Application of Domestic Wastewater):
Permit #MO- _____ Expiration Date _____

1.1 Is the appropriate fee included with the application (see instructions for appropriate fee)? ☑ YES ☐ NO

2. FACILITY

NAME	TELEPHONE NUMBER WITH AREA CODE
Camp Palestine	816-509-3876

ADDRESS (PHYSICAL)	CITY	STATE	ZIP CODE
396 SW 730	Chilhowee	MO	64733

2.1 Legal description: ¼, S ¼, NW ¼, Sec. 32 , T 45n , R 26W County Johnson

2.2 UTM Coordinates Easting (X): 427914 Northing (Y): 4262218
For Universal Transverse Mercator (UTM), Zone 15 North referenced to North American Datum 1983 (NAD83)

2.3 Name of receiving stream: Unnamed Tributary to East Fork Post Oak Creek (U)

2.4 Number of outfalls: Wastewater outfalls: 1 Stormwater outfalls: Instream monitoring sites:

3. OWNER

NAME	EMAIL ADDRESS	TELEPHONE NUMBER WITH AREA CODE
Palestine Missionary Baptist Church of Jesus Christ	esechret@lightenvironmental.(	(816) 509-3876

ADDRESS	CITY	STATE	ZIP CODE
3619 E. 35th Street	Kansas City	MO	64128

3.1 Request review of draft permit prior to public notice? ☐ YES ☑ NO

3.2 Are you a publicly owned treatment works? ☐ YES ☑ NO
If yes, is the Financial Questionnaire attached? ☐ YES ☐ NO

3.3 Are you a privately owned treatment works? ☑ YES ☐ NO

3.4 Are you a privately owned treatment facility regulated by the Public Service Commission? ☐ YES ☑ NO

4. CONTINUING AUTHORITY: Permanent organization that will serve as the continuing authority for the operation, maintenance and modernization of the facility.

NAME	EMAIL ADDRESS	TELEPHONE NUMBER WITH AREA CODE
SAME		

ADDRESS	CITY	STATE	ZIP CODE

If the continuing authority is different than the owner, include a copy of the contract agreement between the two parties and a description of the responsibilities of both parties within the agreement.

5. OPERATOR

NAME	TITLE	CERTIFICATE NUMBER
SAME		

EMAIL ADDRESS	TELEPHONE NUMBER WITH AREA CODE

6. FACILITY CONTACT

NAME	TITLE
Wendell Jones	Director

EMAIL ADDRESS	TELEPHONE NUMBER WITH AREA CODE
esechrest@lightenvironmental.com	(816) 509-3876

ADDRESS	CITY	STATE	ZIP CODE
3619 E. 35th Street	Kansas City	MO	64128

7. DESCRIPTION OF FACILITY

7.1 Process Flow Diagram or Schematic: Provide a diagram showing the processes of the treatment plant. Show all of the treatment units, including disinfection (e.g. – chlorination and dechlorination), influents, and outfalls. Specify where samples are taken. Indicate any treatment process changes in the routing of wastewater during dry weather and peak wet weather. Include a brief narrative description of the diagram.

Attach sheets as necessary.

See Attachment #1 for a diagram showing the process of the treatment plant. See last page of Attachment #1 for sample point.
See Attachment #2 for outfall see the #5 on last page of attachment.

RECEIVED
MAR 7 2016
KANSAS CITY REGIONAL OFFICE

7.2 Attach an aerial photograph or USGS topographic map showing the location of the facility and outfall.

8. ADDITIONAL FACILITY INFORMATION

8.1 Facility SIC code: 7033 Discharge SIC code: 4952

8.2 Number of people presently connected or population equivalent (P.E.) 1 Design P.E. SK

8.3 Connections to the facility:

Number of units presently connected:

Homes 2 Trailers 0 Apartments 22 Other (including industrial) N/A

Number of commercial establishments: N/A

8.4 Design flow: 29,130 gpd | Actual flow: 4,090 gpd

8.5 Will discharge be continuous through the year? ☑ Yes ☐ No

Discharge will occur during the following months: 12

How many days of the week will discharge occur? 7

8.6 Is industrial wastewater discharged to the facility? ☐ Yes ☑ No

If yes, attach a list of the industries that discharge to your facility

8.7 Does the facility accept or process leachate from landfills? ☐ Yes ☑ No

8.8 Is wastewater land applied? ☐ Yes ☑ No

If yes, is Form I attached? ☐ Yes ☐ No

8.9 Does the facility discharge to a losing stream or sinkhole? ☐ Yes ☑ No

8.10 Has a wasteload allocation study been completed for this facility? ☐ Yes ☑ No

9. LABORATORY CONTROL INFORMATION

LABORATORY WORK CONDUCTED BY PLANT PERSONNEL

Lab work conducted outside of plant. ☑ Yes ☐ No

Push-button or visual methods for simple test such as pH, settlable solids. ☑ Yes ☐ No

Additional procedures such as dissolved oxygen, chemical oxygen demand, biological oxygen demand, titrations, solids, volatile content. ☐ Yes ☑ No

More advanced determinations such as BOD seeding procedures, fecal coliform, nutrients, total oils, phenols, etc. ☐ Yes ☑ No

Highly sophisticated instrumentation, such as atomic absorption and gas chromatograph. ☐ Yes ☑ No

10. COLLECTION SYSTEM

10.1 Length of pipe in the sewer collection system? 17,679 Feet, or _____ Miles (either unit is appropriate)

10.2 Does significant infiltration occur in the collection system? ☐ Yes ☑ No

If yes, briefly explain any steps underway or planned to minimize inflow and infiltration:

11. BYPASSING

Does any bypassing occur in the collection system or at the treatment facility? ☐ Yes ☑ No

If yes, explain:

RECEIVED
MAR 7 2016
KANSAS CITY REGIONAL OFFICE

12. SLUDGE HANDLING, USE AND DISPOSAL

12.1 Is the sludge a hazardous waste as defined by 10 CSR 25? ☐ Yes ☒ No

12.2 Sludge production, including sludge received from others: 0 Design dry tons/year 0.5 Actual dry tons/year

12.3 Capacity of sludge holding structures:
Sludge storage provided: 930 cubic feet; 365 days of storage; 0.2 average percent solids of sludge;
☐ No sludge storage is provided. ☒ Sludge is stored in lagoon.

12.4 Type of Storage:
- ☒ Holding tank
- ☐ Building
- ☐ Basin
- ☐ Lagoon
- ☐ Concrete Pad
- ☐ Other (Describe) _____

12.5 Sludge Treatment:
- ☐ Anaerobic Digester
- ☐ Lagoon
- ☐ Composting
- ☐ Storage Tank
- ☒ Aerobic Digester
- ☐ Other (Attach description)
- ☐ Lime Stabilization
- ☐ Air or Heat Drying

12.6 Sludge Use or Disposal:
- ☐ Land Application
- ☐ Surface Disposal (Sludge Disposal Lagoon, Sludge held for more than two years)
- ☒ Contract Hauler
- ☐ Hauled to Another treatment facility
- ☐ Incineration
- ☐ Sludge Retained in Wastewater treatment lagoon
- ☐ Solid waste landfill

12.7 Person responsible for hauling sludge to disposal facility:
☐ By applicant ☒ By others (complete below)

NAME	EMAIL ADDRESS
Crowder Septic Service	N/A

ADDRESS	CITY	STATE	ZIP CODE
PO Box 163	Bowling	MO	64074

CONTACT PERSON	TELEPHONE NUMBER WITH AREA CODE	PERMIT NO.
Mike Crowder	(816) 229-3811	MO- N/A

12.8 Sludge use or disposal facility
☐ By applicant ☒ By others (Complete below.)

NAME	EMAIL ADDRESS
Truninger Brothers, LLC	N/A

ADDRESS	CITY	STATE	ZIP CODE
PO Box 336	Pleasant Hill	MO	64080

CONTACT PERSON	TELEPHONE NUMBER WITH AREA CODE	PERMIT NO.
Dick Truninger	(816) 540-5673	MO- N/A

12.9 Does the sludge or biosolids disposal comply with federal sludge regulations under 40 CFR 503?
☒ Yes ☐ No (Explain)

RECEIVED
MAR 7 2016
KANSAS CITY REGIONAL OFFICE

13. CERTIFICATION

I certify that I am familiar with the information contained in the application, that to the best of my knowledge and belief such information is true, complete and accurate, and if granted this permit, I agree to abide by the Missouri Clean Water Law and all rules, regulations, orders and decisions, subject to any legitimate appeal available to applicant under the Missouri Clean Water Law.

NAME (TYPE OR PRINT)	OFFICIAL TITLE	TELEPHONE NUMBER WITH AREA CODE
Wendell Jones	Manager	(816) 509-3876

SIGNATURE	DATE SIGNED
Wendell Jones	3-7-16

ENGINEERING DATA

Attachment #1

WASTEWATER TREATMENT SYSTEM

FOR

RECEIVED
MAR 7 2016
KANSAS CITY REGIONAL OFFICE

CAMP PALESTINE

EQUIPMENT PROPOSED

NORWECO MODEL ST-225 M (22,500 gpd)WASTEWATER TREATMENT PLANT

WITH:

DUPLEX MECHANICAL EQUIPMENT

GALVANIZED GRATING

TIME CLOCK W/ALTERNATOR

1,500 GAL. TRASH TRAP

7,500 A.S.H. TANK W/DECANT

FLOW BOX W/GAUGE

BY

NORWECO.
NORWALK WASTEWATER EQUIPMENT COMPANY

WASTEWATER TREATMENT PLANT SPECIFICATIONS

Progress Through Service Since 1906

NORWECO
NORWALK WASTEWATER EQUIPMENT COMPANY

HIGH PERFORMANCE
MODULAIR™ PLANT

GENERAL

The contractor shall furnish and install one complete Extended Aeration wastewater treatment facility with all necessary parts and equipment as described in the following specifications. The Extended Aeration wastewater treatment facility shall provide primary and secondary treatment of the wastewater flow and shall be as manufactured by Norweco, Inc., Norwalk, Ohio, U.S.A.

Treatment of the daily wastewater flow shall be accomplished by the Extended Aeration process. Other variations of the Activated Sludge process such as Contact Stabilization, Step Aeration, etc. are more susceptible to toxic and hydraulic upsets and shall not be considered for this application.

Primary treatment shall be accomplished in the aeration chamber of the facility. All incoming wastewater shall enter and be retained in the aeration chamber for twenty-four hours. Air shall be introduced along one wall near the bottom to produce a mixing and rolling action in the tank. Two thousand six hundred cubic feet of air shall be pumped into the aeration chamber for each pound of BOD applied per day. The spiral rolling action created by the introduction of air shall insure thorough mixing of the incoming organic material with the activated sludge present in the chamber. In addition, the spiral flow pattern shall prevent short circuiting of the flow and assure adequate retention of all organic materials.

Secondary treatment of the wastewater shall be accomplished in a clarification chamber. Mixed liquors shall flow from the aeration chamber into the clarification chamber by hydraulic displacement. The effective holding capacity of the clarifier shall be calculated after excluding the lower two-thirds, by height, of the hopper(s) and shall still be of sufficient volume to provide in excess of four hour retention of the daily flow. The chamber shall be designed so that the clarifier will successfully perform its function of solids separation without hydraulic upset even when the significant runoff period is eight hours.

The Extended Aeration wastewater treatment facility shall provide an anticipated eighty-five to ninety-five percent removal of BOD and suspended solids. Net sludge volume increases shall be nominal and should range from zero to one percent depending upon influent characteristics.

Capability of a plant of this type to perform as outlined, when built by an approved manufacturer, shall be certified by an independent testing laboratory. The manufacturer shall make certified data available to the regulatory agency, customer, consultant and contractor as required.

Principal items of equipment supplied with the system shall include precast concrete aeration and clarification tank(s), air distribution system, air diffuser system, airlift sludge return pumping system, airlift surface skimming system, galvanized grating with master-keyed locking device for all tank openings, rotary blowers, motors, electrical controls, mechanical equipment housing, effluent weir trough and all necessary internal piping and mechanical equipment. The wastewater treatment facility structure shall be reinforced to withstand normal pressures from external soil and internal hydrostatic loads. To eliminate any possibility of differential settling of the tankage the contractor shall install a six inch thick pad in the bottom of the excavation prior to tank setting.

OPERATING CONDITIONS

The wastewater treatment facility shall be a Norweco model ST-225M as shown on drawing number PC-4-608 capable of treating 22,500 gallons per day of sanitary sewage. This facility shall be designed and built to serve a population equivalent of 300 with a total loading and treatment capability of 50 pounds of five day BOD per day. Hydraulic design considerations of the facility shall be such that intermittent peak flow factors as high as four shall not upset hydraulic reliability within the system.

AERATION

The aeration chamber shall have a capacity of 27,157 gallons to provide twenty-four hour retention of the daily wastewater flow. The chamber shall be of sufficient size to provide a minimum of 67 cubic feet of tank capacity per pound of applied BOD. Concrete fillets shall be installed in the bottom of the chamber parallel to the treatment flow to insure uniform tank roll and prevent deposition of solids. Overall design of the chamber shall be such that effective mixing shall be maintained to provide optimum treatment.

The chamber itself shall be of properly reinforced five thousand PSI, twenty-eight day compression strength precast concrete. Each casting used to construct the chamber shall be a monolithic unit with all four walls incorporated into the tank section. Individual tank sections shall be joined with a horizontal tongue and groove joint and shall be sealed with a four inch by one-half inch neoprene gasket. Non-compression joints with grouted sealing compounds shall not be used.

AIR DISTRIBUTION PIPING

Galvanized schedule forty piping and galvanized malleable iron pipe fittings shall be used throughout the air distribution system. Individual galvanized pipe unions, dresser couplings and flexible couplings with stainless steel clamps shall be provided as necessary in the air distribution system. Individual air control valves shall be installed in the air distribution piping as required to allow individual adjustment of each separate element within the system.

Primary air distribution shall be provided through a galvanized air header. The air header shall have individual drop pipes connected to the header assembly for air supply to individual "Evenair" diffuser assemblies. Each drop pipe shall be equipped with an air adjustment valve to control air flow individually to each diffuser assembly. In addition, a quick release coupling or union shall be provided for each drop pipe and diffuser assembly downstream from the air adjustment valve.

Wastewater treatment plants of this design which consist of two parallel arrangements of aeration and clarification tanks in series shall be equipped with separate and isolated aeration equipment, galvanized air header piping, drop pipes and "Evenair" diffuser bars for each series of tanks provided.

AIR DIFFUSION SYSTEM

Norweco "Evenair" diffusers shall be provided parallel to the treatment flow in the aeration chamber. Each diffuser assembly shall be installed not more than twelve inches off the floor of the chamber nor more than twelve inches away from the chamber sidewall. "Evenair" diffusers shall

be constructed of schedule eighty polyvinyl chloride (PVC) plastic and shall be designed to insure uniform mixing within the aeration chamber. Fine air bubble distribution effected by the diffusers shall be adequate to provide all oxygen necessary for the Aerobic Digestion process while maintaining an acceptable dissolved oxygen level in the final plant effluent. Arrangement of Norweco "Evenair" diffusers shall be consistent throughout the aeration chamber and shall provide at least one air diffusion orifice for each five inches of aeration chamber length.

CLARIFICATION

A final clarification chamber shall be provided for secondary treatment of the daily flow. It shall have a total holding capacity of 8,750 gallons. Effective holding capacity of the clarifier shall be at least 7,565 gallons when not using the lower two-thirds (by height) of the hopper area for computing capacity. The effluent weir shall be of sufficient length to provide an overflow rate of 1,088 gallons per lineal foot per day and surface area of the tank shall provide a settling rate of 138 gallons per square foot per day.

The clarifier shall be constructed of properly reinforced five thousand PSI, twenty-eight day compression strength precast concrete. Each casting in the clarifier shall be a monolithic unit with all four walls incorporated into the tank section. The clarifier shall consist of essentially four independent zones operating together to provide satisfactory solids separation.

An inlet baffle zone shall be provided at the flow inlet to the clarification chamber. All transfer turbulence shall be dissipated upstream of the inlet baffle and its performance shall be adequate to eliminate all turbulence downstream from the baffle. The area contained behind the baffle shall allow adequate capacity and retention for surfacing of all buoyant material entering the clarifier. The baffle shall extend above the surface an adequate distance to entrap all floating material and it shall extend below the transfer port a sufficient distance to eliminate passage of buoyant material or surface turbulence.

Flows shall be directed out of the inlet baffle zone into the hopper zone. All transfer shall be accomplished below the bottom of the inlet baffle into the upper one-third area of the hopper zone. In this zone sludge shall settle by gravity to the bottom of the hopper(s). The hopper(s) shall have sloping sidewalls directing all sludge to the bottom near the airlift pump inlet(s). Maximum area at the base of the hopper(s) shall be one square foot and all sidewalls forming the hopper(s) shall have a side slope of at least sixty degrees. Here settled sludge shall be returned to the aeration chamber by continuous airlift pumping.

Clarified liquids shall be contained in the settling zone above the hopper area for additional gravity settling. From here they shall be hydraulically displaced to the outlet zone. The outlet zone shall consist of an adjustable sideplate effluent weir trough and outlet baffle. The outlet baffle shall extend into the surface of the liquid to a point not exceeding three inches and shall extend above the surface an equal distance. The baffle shall run the entire length of the outlet zone and shall totally separate the surface liquids of the settling and outlet zones. Centered in the outlet zone parallel to the outlet baffle shall be an effluent weir trough with two adjustable v-notch sideplates. The trough shall be capable of being adjusted from end to end to provide adequate fall to the plant outlet and the sideplates shall each be capable of being levelled from side to side and end to end to the level of the liquid surface in the chamber.

AIRLIFT SLUDGE RETURN

A galvanized airlift sludge return pump shall be provided for the hopper(s) in the clarification chamber. Air shall be supplied to the airlift(s) through a secondary air distribution system connected to the main air header of the treatment plant. Individual air manifold piping shall be installed for each airlift and shall be equipped with a valve for fine adjustment or shut-off.

The airlift(s) proper shall be constructed of schedule forty galvanized steel pipe and schedule forty galvanized malleable iron pipe fittings. A removable cleanout plug shall be installed at the top of the vertical airlift pipe and a non-rising stem type backwash valve shall be provided in the horizontal discharge line. Piping shall be arranged so that returned sludge is deposited in the aeration chamber at a point which prevents short-circuiting and with positive visible return. The airlift pump(s) shall be designed and manufactured of adequate size pipe and with sufficient air supply to provide a pumping rate in excess of the total daily flow. Air required to achieve this shall be provided in excess of that necessary for aeration, mixing and treatment.

The airlift pump inlet(s) shall be equipped with an inlet bell and pedestal legs. The legs shall be used to position the inlet correctly at the base of the hopper. Inlets that are cantilevered or cut out to rest on the bottom of the hopper will restrict sludge flow and shall not be considered. The pump inlet bell shall be connected directly to the airlift inlet and shall enlarge the inlet sufficiently to reduce airlift blockage or plugging.

AIRLIFT SURFACE SKIMMER

An airlift surface skimming system shall be installed in the settling zone of the clarification chamber(s). The airlift skimmer(s) shall be constructed of schedule forty galvanized steel pipe and schedule forty galvanized malleable iron pipe fittings. The skimmer airlift(s) shall be constructed of one continuous length of galvanized pipe formed into a twenty inch diameter return bend to pump from the chamber surface to the horizontal discharge line. Skimmer inlets and airlifts constructed with acute angle bends or submerged fittings are susceptible to plugging and shall not be considered.

The skimmer inlet(s) shall be equipped with an adjustable polystyrene plastic cone. The inlet cone(s) shall be provided with attached flexible connector for installation and adjustment of the cone(s) on the airlift assembly. The diameter of the inlet cone shall be at least three times larger than the diameter of the airlift pipe to insure acceptable skimming velocities.

A removable galvanized cleanout plug shall be provided at the top of the skimmer airlift pipe where it joins the horizontal discharge line. The discharge line shall pass through the wall of the clarification chamber and return back to the aeration chamber for final discharge. The skimmer air supply shall be provided through a secondary air distribution system connected to the main air header of the treatment plant. Air adjustment/shut-off valve(s) will be installed in the skimmer air manifold supply line(s).

MECHANICAL EQUIPMENT – DUPLEX

Air required for the treatment process and operation of airlifts in the clarifier shall be provided by (one-two-three) model 36 Roots-Connersville blower(s) or equal. The blower(s) shall be of the rotary positive displacement type and shall provide 150 CFM of free air at the rated operating pressure of 4 PSI. The blower unit(s) shall be provided with inlet air filter/silencer(s), discharge pressure relief valve and discharge flexible coupling connector to air header assembly. Wastewater treatment plants of this design which consist of two parallel arrangements of aeration and clarification tanks in series shall be equipped with separate and isolated blower units for each series of tanks provided. If a standby blower is provided, check valves shall be included in the discharge piping. Blower connection to the drive motor(s) shall be with conventional v-belt power transmission drive assembly. A spare stand-by set of drive v-belts shall be supplied with the blower unit(s).

(One-Two-Three) seventeen hundred fifty RPM, 230 volt, Single phase, 60 hertz, 5 horsepower, shielded, drip-proof electric motor(s) shall be used to drive the blower(s). When operating at the rated horsepower the motor(s) shall reach a maximum speed that shall exceed ninety-seven percent of the reference sychronous speed. The motor(s) for the facility shall be designed and rated for continuous duty applications and shall not overload or exceed motor nameplate ratings when operating as outlined for this facility. The motor(s) shall be mounted in a weatherproof cabinet on an adjustable slide base for ease of motor alignment and belt tension adjustment.

ELECTRICAL CONTROLS

Electrical controls shall be mounted within a weatherproof NEMA IV enclosure to protect electrical equipment. The enclosure shall have two coats of weather resistant paint and be equipped with master-keyed locking device. Controls shall include: 230 volt, Single phase motor control center, across-the-line switch type combination starter(s), thermal overload protection, circuit breaker(s) and toggle selector switch(es). The motor control center shall be a model _____ as manufactured by Norweco, Inc., Norwalk, Ohio. The motor control center shall be mounted on top of the wastewater treatment facility adjacent to the primary mechanical equipment housing with resillent connection to the base of the housing.

TIME CLOCK (OPTIONAL)

Electrical controls shall include a fifteen minute multiple, twenty-four hour time clock to permit cyclic automatic operation of the treatment facility throughout the day. A three-position "hand-off-auto" selector switch shall be installed for each blower unit supplied to allow the unit to operate either on a continuous run basis or according to the cycle established on the time clock.

EMERGENCY POWER (OPTIONAL)

The manufacturer shall furnish and install an emergency power source receptacle for a portable emergency power generator. This receptacle shall be weatherproof and shall lead directly into the emergency power main fusible switch. The receptacle shall be rated for _____ AMPS, (three-four) wire, four pole, sixty hertz, _____ volts per Russell & Stoll 7334-R reverse service or equal.

GALVANIZED METAL GRATING

Tank openings shall be protected with galvanized metal grating padlocked in position. Individual lock bar assemblies shall be provided for each tank opening. Pin tumbler type padlocks shall be used to secure each grating section and the locks shall be part of the master-keyed system used for tank openings, control cabinets, equipment housing, and related equipment. To permit easy removal and handling, individual grating sections shall weigh not more than fifty pounds each and shall measure not more than forty-five inches in widith or five feet in length. They shall be of sufficient strength to have a deflection which does not exceed one-quarter inch under a distributed load of one hundred pounds per square foot. No more than two individual grating sections shall be used to cover individual tank openings. Slat type loose or unsecured grating shall not be used. The galvanized safety grating shall also be used as a leaf screen to prevent entry of leaves and discarded debris into the tankage. Therefore maximum width of individual openings within the grating proper shall not exceed three-quarters of an inch.

CORROSION PROTECTION

After completion of welding, all steel surfaces of the treatment plant equipment shall be blasted to white metal. All surfaces shall be primed with one coat of strontium chromate primer thinned ten percent with epoxy thinner, for a dry thickness of one and one-half mils. After a minimum of eight hours drying time, two coats of catalyzed PPG Aquapon shall be applied, one coat in a horizontal spray pattern and one coat in a vertical spray pattern. This shall produce a four to six mil total dry thickness on the interior surfaces and six to nine mil total dry thickness on the exterior surfaces.

The finished interior and exterior color shall be Norweco green. The plant manufacturer shall provide sufficient catalized epoxy for field touch-up.

MANUFACTURER

The equipment specified herein shall be the product of a manufacturer having a minimum of five years experience in the construction of prefabricated equipment of this particular type and design. The contractor shall prepare his bid on the basis of the specific equipment and materials specified for purposes of determining the low bid. This is not done, however, to eliminate other products or equipment of equal quality and efficiency. Substitution of equipment may be made if the proposed substitution is superior or equal in construction and performance. If equipment is to be substituted the contractor shall obtain approval prior to execution and shall at his expense prepare and submit revised engineering drawings and specifications for the project. It is assumed that the substitution will result in a reduction of cost to the contractor and, if revised drawings submitted by the contractor are approved, the savings will be passed along in a reduction of the contractor's bid price. After execution of the contract, substitution of equipment of makes other than that specified will not be considered.

WARRANTY

The manufacturer shall warrant the equipment being supplied to the owner against defects in workmanship and materials for a period of one year under normal use and service.

The warranty shall not cover any item which has been subjected to external damage, disassembled and/or repaired by unauthorized persons, flooded or otherwise mistreated. The manufacturer shall not be held liable for any consequential damages or contingent liabilities which are directly or indirectly a result of any failures in materials or equipment, or from delivery or installation delays. Items normally consumed in service such as grease, oil, v-belts, fuses, filters, seals, etc. shall not be warranted.

NORWECO
NORWALK WASTEWATER EQUIPMENT COMPANY

AERATED SLUDGE HOLDING FACILITY SPECIFICATIONS

Progress Through Service Since 1906

MODULAR STYLE FOR DETACHED INSTALLATION

A precast concrete aerated sludge holding facility shall be installed to provide storage capability for excess sludge generated by the extended aeration wastewater treatment plant. The facility shall be sized in accordance with an anticipated flow into the treatment plant of 21,000 gallons per day. The tankage shall be as shown on drawing number _____ and as manufactured by Norweco, Inc., Norwalk, Ohio. The sludge holding tank shall have a total holding capacity of 1,002 cubic feet (7,500 gallons), which shall exceed ten percent of the total anticipated daily wastewater flow. Aerated sludge holding tanks for treatment plants treating daily wastewater flows of less than 10,000 gallons shall be sized with a minimum capacity of at least 134 cubic feet (1,000 gallons) to assure effective separation of supernatant from settled sludge.

The aerated sludge holding tank shall be constructed of properly reinforced five thousand PSI, twenty-eight day compression strength precast concrete. Each casting used in the construction of the tank shall be a monolithic unit with all four walls of the casting incorporated into each section of the tank. Individual tank sections shall be joined one to another with a horizontal tongue and groove joint. To insure the watertight integrity of the finished structure, each joint shall be sealed with a four by one-half inch neoprene gasket. Non-compression joints with grouted sealing compounds shall not be used. The neoprene gasket shall be adhesive-backed with release liner on one side. It shall be installed and compressed to fit the contour of the receiving "groove" of each casting within the system before the adjoining "tongue" section is set into position.

The airlift sludge return of the wastewater treatment plant shall be equipped with auxiliary piping and flow diversion valves to allow the sludge return flow to be diverted to the aerated sludge holding tank. An auxiliary air header constructed of schedule 40 galvanized steel pipe shall be installed from the main air header of the wastewater treatment plant to supply air for the operation of the aerated sludge holding facility. The treatment plant blower(s) shall be enlarged to provide 43,200 cubic feet of air per day (30 cubic feet per minute) to the sludge holding tank. The air shall be supplied at a minimum rate of forty cubic feet per day per cubic foot of tank capacity. The air flow shall be sufficient to maintain aerobic conditions and to promote proper mixing and digestion of sludge. Air shall be injected into the tank through Norweco "Evenair"™ diffusers containing a minimum of one air diffusion orifice for each five inches of tank length. A drop pipe to each diffuser shall be connected to the common air header by means of a galvanized quick-release coupling. One air adjustment valve shall be provided for each drop pipe upstream of the quick disconnect to enable a proper balance of air distribution to be obtained even when a diffuser has been removed for inspection.

All tank openings in the aerated sludge holding facility shall be covered with galvanized metal grating padlocked in position. Individual lock bar assemblies shall be provided for each tank opening. Pin tumbler type padlocks shall be used to secure each grating section and the locks shall be part of the master-keyed system used for tank openings, control cabinets and equipment housing of the wastewater treatment plant. To permit easy removal and handling, individual grating sections shall weigh not more than fifty pounds each and shall measure not more than forty-five inches in width or five feet in length. Grating shall be of sufficient strength to have a

deflection which does not exceed one-quarter inch under a distributed load of one hundred pounds per square foot.

An overflow line shall be provided with the aerated sludge holding facility and shall be installed to permit drainage by gravity to the inlet of the wastewater treatment facility. The overflow shall be installed above the normal operating liquid level in the holding tank and shall be used for supernatant return and as an emergency overflow to maintain liquid levels in the holding tank at a desireable level.

AIRLIFT SLUDGE RETURN (OPTIONAL)

An airlift sludge return pump shall be installed in the aerated sludge holding tank to allow controlled removal of settled sludge. The airlift pump shall be constructed of schedule 40 galvanized pipe and schedule 40 galvanized malleable iron fittings. A removeable cleanout plug shall be installed at the top of the vertical airlift pipe and a non-rising stem type backwash and flow regulation valve shall be provided in the horizontal discharge line. Air for operation of the airlift pump shall be supplied through auxiliary piping from the sludge holding tank air header and a valve shall be installed with the airlift for adjustment and shut-off. The wastewater treatment plant blower(s) shall provide an additional 10 CFM of air for operation of the airlift. The air shall be delivered at a pressure sufficient to maintain acceptable withdrawal rates of settled sludge from the bottom of the tank. The airlift pump inlet shall be equipped with pedestal legs to prevent blockage of the pump or restriction of flow. Inlets that are cantilevered or cut out to rest on the bottom of the tank are susceptible to plugging and shall not be considered for this application.

NORWECO®
NORWALK WASTEWATER EQUIPMENT COMPANY

PRETREATMENT CHAMBER SPECIFICATIONS

Progress Through Service Since 1906

For Primary Screening

A precast concrete pretreatment chamber (trash trap) shall be used for primary screening of the daily wastewater flow. The pretreatment system shall be installed preceeding the secondary wastewater treatment facility and all raw wastewater flow shall pass through the pretreatment chamber for primary screening before entering the treatment plant proper. The chamber shall be as shown on drawing number _____ and as manufactured by Norweco, Inc., Norwalk, Ohio. It shall have a total holding capacity of 1,500 gallons to provide 1.7 hour rentention of the daily wastewater flow.

The pretreatment chamber shall be constructed of properly reinforced five thousand PSI, twenty-eight day compression strength precast concrete. Each casting used in the construction of the trash trap shall be a monolithic unit with all four walls of the chamber incorporated into each section of the tank. Individual tank sections shall be joined one to another with a horizontal tongue and groove joint. To insure the watertight integrity of the finished structure each joint shall be sealed with a four inch by one-half inch neoprene gasket. Non-compression joints with grouted sealing compounds shall not be used. The neoprene gasket shall be adhesive backed with release liner on one side. It shall be installed and compressed to fit the contour of the receiving "groove" of each casting within the system before the adjoining "tongue" section is set into position.

The inlet and outlet of the tank shall be designed to prevent passage of material that may float to the top or settle to the bottom of the unit. A baffle shall be installed on the inlet end of the chamber to insure that all material passed to the tank is submerged and to prevent materials accumulating in the floating scum mat from interfering with or blocking the inlet flow. The tank outlet shall be equipped with an outlet tee to prevent the discharge of floating and settled material. The outlet tee shall extend vertically into the tank a minimum of one-third of the distance from the outlet invert to the inside tank bottom, and it shall be of adequate size to handle a peak flow factor of four without restricting the outlet and disturbing hydraulic displacement to the secondary facility. Both the inlet baffle and the outlet tee shall extend a minimum of eighteen inches below the surface of the tank contents.

There shall be removable clean-out covers cast into the top of the tank above the inlet and outlet ports. While they shall be large enough to allow tank inspection and pumping, they shall be small enough to insure that the tank cannot be entered physically for inspection or service. Tanks with enlarged clean-out ports or covers shall not be used for this application.

Ⓐ EXTENDED AERATION CHAMBERS
Ⓑ – FINAL SETTLING/CLARIFICATION CHAMBER

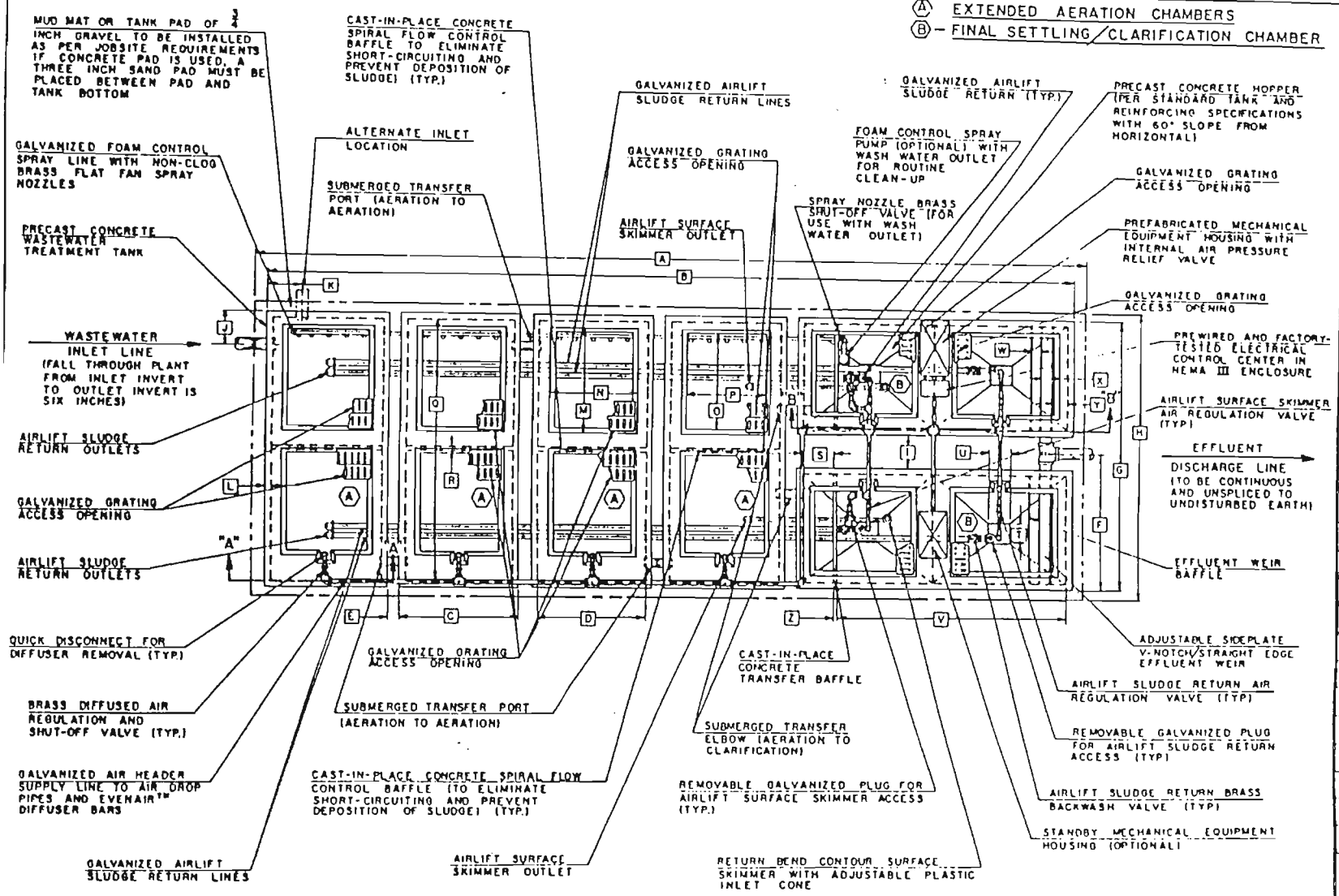

GENERAL NOTES:

1. GRADE AROUND WASTEWATER FACILITY MUST BE MAINTAINED SUCH THAT SURFACE WATER CANNOT DRAIN INTO EXCAVATION DURING CONSTRUCTION OR ACCUMULATE ON SURFACE AFTER COMPLETION
2. SAND BACKFILL MUST BE USED IN, AROUND, AND BETWEEN ALL TANKS
3. CONTACT THE LOCAL, LICENSED NORWECO DISTRIBUTOR WHEN THE SYSTEM IS READY FOR FIELD TESTING AND START-UP. DO NOT ENERGIZE ANY CIRCUITS PRIOR TO DISTRIBUTOR NOTIFICATION

PROJECT ENGINEER'S APPROVAL I (WE) HEREBY CERTIFY THAT THIS DRAWING HAS BEEN CHECKED AND IS APPROVED FOR USE IN CONFORMITY WITH THE CONTRACT DOCUMENTS

DATE _____

NAME _____

CONTRACTOR'S CERTIFICATION I (WE) HEREBY CERTIFY THAT THIS DRAWING HAS BEEN REVIEWED AND CONFORMS TO THE REQUIREMENTS OF THE CONTRACT DOCUMENTS

DATE _____

NAME _____

CRITICAL DIMENSIONS (SHEET NUMBER ONE ONLY)

A	47'-8"	N	5'-0" TYP
B	45'-8"	O	5'-8" TYP
C	6'-10" TYP	P	4'-8" TYP
D	6'-2" TYP	Q	15'-0" TYP
E	0'-8" TYP	R	0'-2" TYP
F	7'-10" TYP	S	1'-8" TYP
G	15'-8"	T	1'-0" TYP
H	17'-8"	U	1'-0" TYP
I	2'-0"	V	13'-2" TYP
J	1'-5"	W	0'-6" TYP
K	1'-6"	X	0'-6" TYP
L	0'-4" TYP	Y	0'-10" TYP
M	6'-0" TYP	Z	0'-2" TYP

ELEVATIONS FOR THIS FACILITY ARE GIVEN ON SHEET TWO ONLY (USING AN ASSUMED INLET INVERT OF 100.00)

NOTE: SHEET NUMBER ONE OF TWO

FOR CRITICAL ELEVATIONS, SECTION VIEWS, OTHER DIMENSIONAL DATA, AND ADDITIONAL LAYOUT DETAILS ON THIS WASTEWATER TREATMENT FACILITY, SEE SHEET NUMBER TWO OF TWO

JOB NAME

JOB LOCATION

U.S. AND FOREIGN PATENTS PENDING

NORWECO.

Model No. ST-225
22,500 GPD
Wastewater Treatment Plant

DLS
MWC
11-14-80
3/8" = 1' 0"
PC-4-608

NORWECO MODEL NUMBER	RATED CAPACITY (GPD)	AVERAGE FLOW (GPM)	PEAK FLOW (GPM)	POPULATION EQUIVALENT (PERSONS)	DAILY BOD LOADING (POUNDS)	CLARIFIER CAPACITY (TOTAL GALLONS)	CLARIFIER CAPACITY (EFFECTIVE GALLONS)	WEIR OVERFLOW RATE (GAL/LIN FT/DAY)	SETTLING RATE (GAL/SQ FT/DAY)	AIR AVAILABLE (CFM)	OPERATING PRESSURE (PSI)	PLANT MOTOR (HP)
ST-225M	22,500	15.63	46.89	300	50	8,750	7,565	1,088	138	160	4.0	5

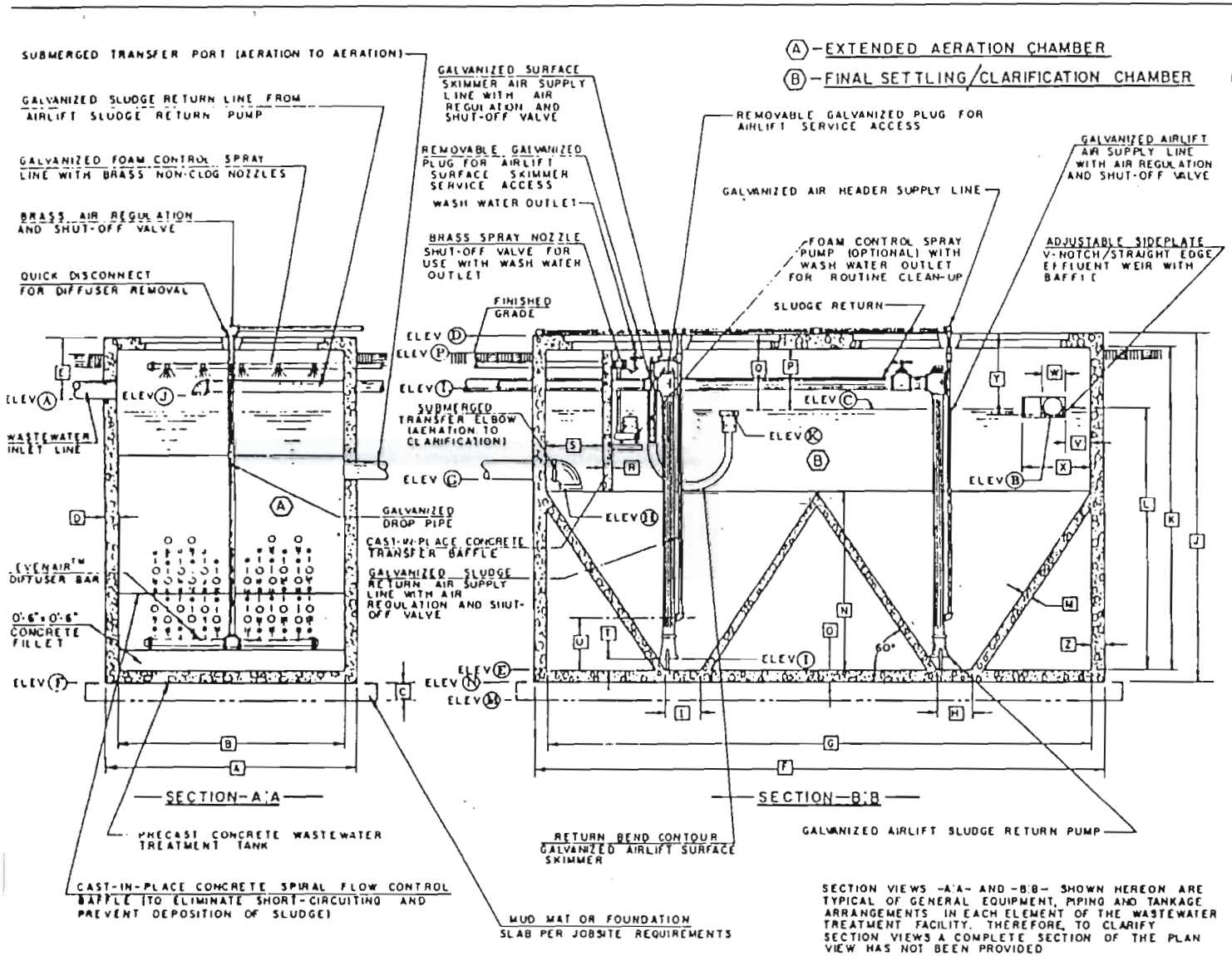

GENERAL NOTES:

1. FALL THROUGH TREATMENT PLANT FROM INLET INVERT TO OUTLET INVERT IS SIX INCHES
2. TREATMENT PLANT OUTLET INVERT IS TWO INCHES BELOW FLOW LINE
3. PRECAST CONCRETE TANK REINFORCING TO BE PER ACI STANDARD 318-71
4. MUD MAT OR TANK PAD OF ¾ INCH GRAVEL TO BE INSTALLED AS PER JOBSITE REQUIREMENTS. IF CONCRETE PAD IS USED, A THREE INCH SAND PAD MUST BE PLACED BETWEEN PAD AND TANK BOTTOM
5. INDIVIDUAL PRECAST CONCRETE TANK SECTIONS TO BE SEALED WITH GROUT, SYNTHETIC MASTIC, OR NEOPRENE GASKET SEAL
6. INLET AND OUTLET LINES FROM TREATMENT FACILITY MUST BE CONTINUOUS AND UNSPLICED TO UNDISTURBED EARTH
7. SAND BACKFILL MUST BE USED IN, AROUND, AND BETWEEN ALL TANKS.
8. GRADE AROUND WASTEWATER FACILITY MUST BE MAINTAINED SUCH THAT SURFACE WATER CANNOT DRAIN INTO EXCAVATION DURING CONSTRUCTION OR ACCUMULATE ON SURFACE AFTER COMPLETION
9. FINISHED GRADE MUST BE MAINTAINED AT LEAST FOUR INCHES BELOW TANK TOP
10. MAIN DISCONNECT FOR ELECTRICAL POWER DISTRIBUTION AT POWER SOURCE SHOULD NOT BE ENERGIZED UNTIL ENTIRE WASTEWATER TREATMENT COMPLEX IS TO BE PLACED INTO OPERATION.
11. CONTACT THE LOCAL, LICENSED NORWECO DISTRIBUTOR WHEN THE SYSTEM IS READY FOR FIELD TESTING AND START-UP. DO NOT ENERGIZE ANY CIRCUITS PRIOR TO DISTRIBUTOR NOTIFICATION

CONTRACTOR'S CERTIFICATION: I (WE) HEREBY CERTIFY THAT THIS DRAWING HAS BEEN REVIEWED AND CONFORMS TO THE REQUIREMENTS OF THE CONTRACT DOCUMENTS	PROJECT ENGINEER'S APPROVAL: I (WE) HEREBY CERTIFY THAT THIS DRAWING HAS BEEN CHECKED AND IS APPROVED FOR USE IN CONFORMITY WITH THE CONTRACT DOCUMENTS
DATE _____	DATE _____
NAME _____	NAME _____

CRITICAL DIMENSIONS		CRITICAL ELEVATIONS		
A	6'-10"	INLET INVERT ELEV.	Ⓐ	100.00
B	6'-2"	OUTLET INVERT ELEV.	Ⓑ	99.50
C	0'-6"	FLOW LINE ELEV	Ⓒ	99.67
D	0'-4" TYP	TANK TOP ELEV.	Ⓓ	101.75
E	1'-9"	INSIDE BOTTOM ELEV	Ⓔ	89.75
F	15'-8"	OUTSIDE BOTTOM ELEV	Ⓕ	89.42
G	15'-0"	CLARIFIER TRANSFER INLET ELEV	Ⓖ	98.08
H	1'-0"	CLARIFIER TRANSFER OUTLET ELEV	Ⓗ	97.82
I	1'-0"	AIRLIFT SLUDGE INLET ELEV.	Ⓘ	90.87
J	12'-4"	AIRLIFT SLUDGE OUTLET ELEV	Ⓙ	100.58
K	11'-8"	SURFACE SKIMMER INLET ELEV	Ⓚ	99.66
L	9'-11"	SURFACE SKIMMER OUTLET ELEV	Ⓛ	100.58
M	0'-3"	TANK PAD BOTTOM ELEV.	Ⓜ	88.92
N	5'-11"	TANK PAD TOP ELEV.	Ⓝ	89.42
O	0'-4" TYP	FINISHED GRADE ELEV	Ⓟ	101.42
P	1'-9"			
Q	2'-1"			
R	0'-2"	CRITICAL ELEVATIONS GIVEN ABOVE ARE BASED UPON AN ASSUMED INLET INVERT OF 100.00		
S	1'-8"			
T	0'-11" TYP			
U	1'-9" TYP			
V	0'-10"			
W	0'-6"			
X	1'-10"			
Y	2'-3"			
Z	0'-4" TYP			

SECTION VIEWS -A:A- AND -B:B- SHOWN HEREON ARE TYPICAL OF GENERAL EQUIPMENT, PIPING AND TANKAGE ARRANGEMENTS IN EACH ELEMENT OF THE WASTEWATER TREATMENT FACILITY. THEREFORE, TO CLARIFY SECTION VIEWS A COMPLETE SECTION OF THE PLAN VIEW HAS NOT BEEN PROVIDED

NOTE: SHEET NUMBER TWO OF TWO

FOR GENERAL PLAN VIEW DETAILS AND OTHER DIMENSIONAL DATA ON THIS WASTEWATER TREATMENT FACILITY, SEE SHEET NUMBER ONE OF TWO

JOB NAME: _____

JOB LOCATION: _____

NORWECO MODEL NUMBER	RATED CAPACITY (GPD)	AVERAGE FLOW (GPM)	PEAK FLOW (GPM)	POPULATION EQUIVALENT (PERSONS)	DAILY BOD LOADING (POUNDS)	CLARIFIER CAPACITY (TOTAL GALLONS)	CLARIFIER CAPACITY (EFFECTIVE GALLONS)	WEIR OVERFLOW RATE (GAL/LIN FT/DAY)	SETTLING RATE (GAL/SQ FT/DAY)	AIR AVAILABLE (CFM)	OPERATING PRESSURE (PSI)	PLANT MOTOR (H P)
ST-225	22,500	15.63	46.89	300	50	8,750	7,565	1,088	138	160	4.0	5

US AND FOREIGN PATENTS PENDING

© NORWECO INC

NORWECO
Model No. ST-225
22,500 GPD
Wastewater
Treatment Plant

DRAWN BY	CFM
CHECKED BY	MWC
DATE	11-21-80
SCALE	¼"=1'-0"
DRAWING NO.	PC-4-608

ROOTS DIVISION
DRESSER INDUSTRIES, INC.
CONNERSVILLE, IN. 47331
PRINTED IN U.S.A.

PERFORMANCE BASED ON INLET AIR AT 14.7 PSIA & 68°F

JUNE 1990

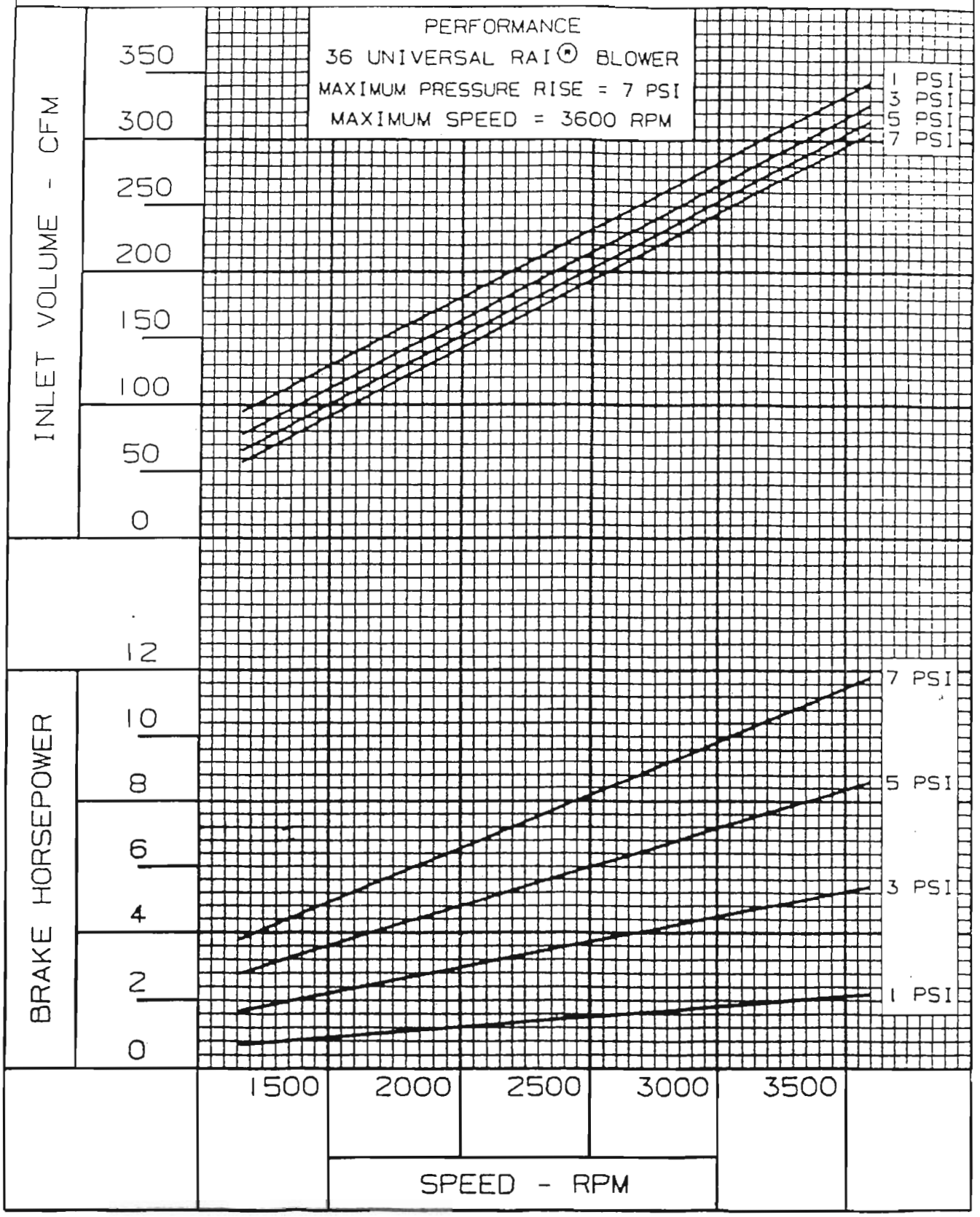

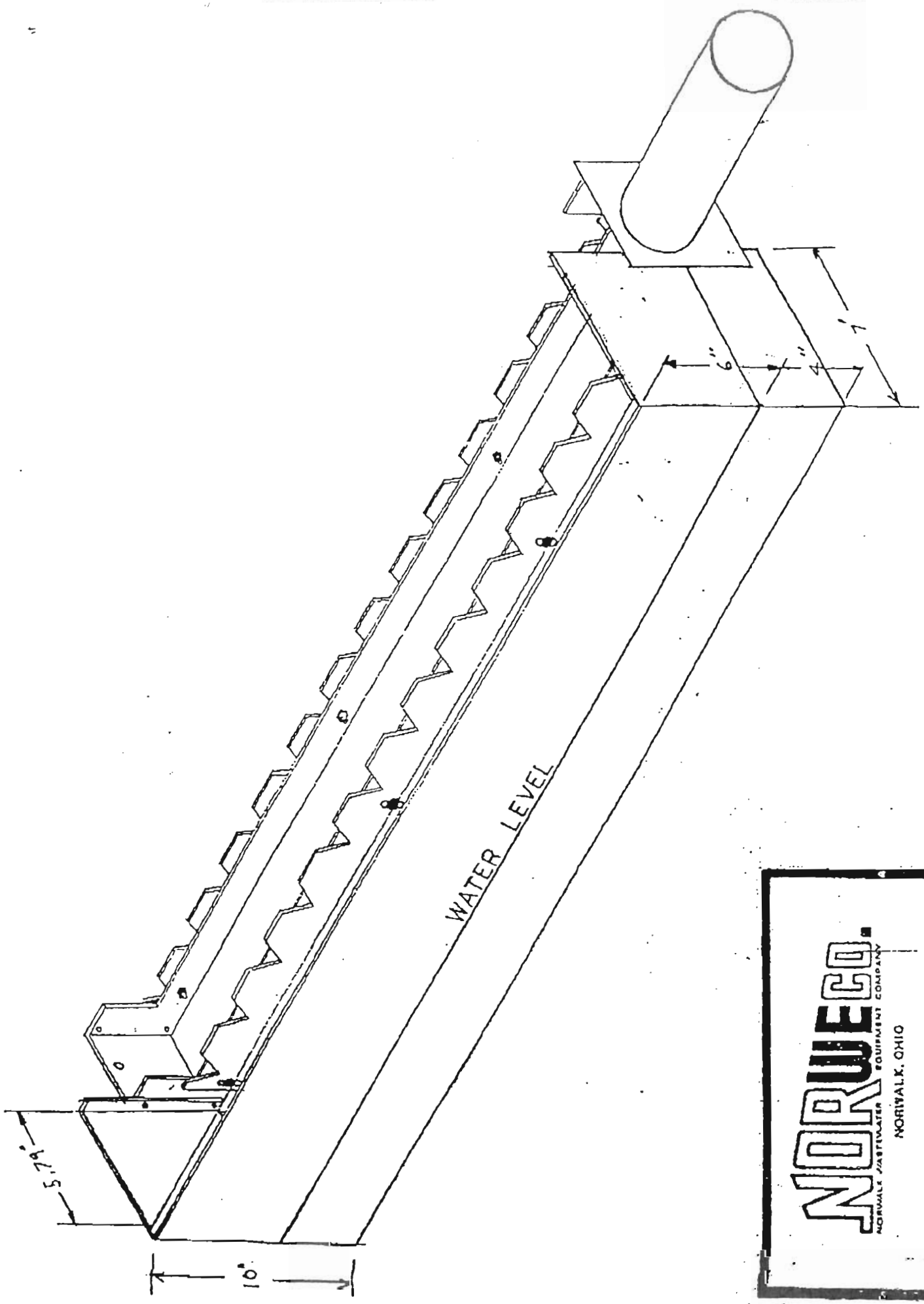
WATER LEVEL
6"
4"
7"
10"
57.9°
NORWECO.
NORWALK WASTEWATER EQUIPMENT COMPANY
NORWALK, OHIO

PRETREATMENT TANK

1500 GALLONS

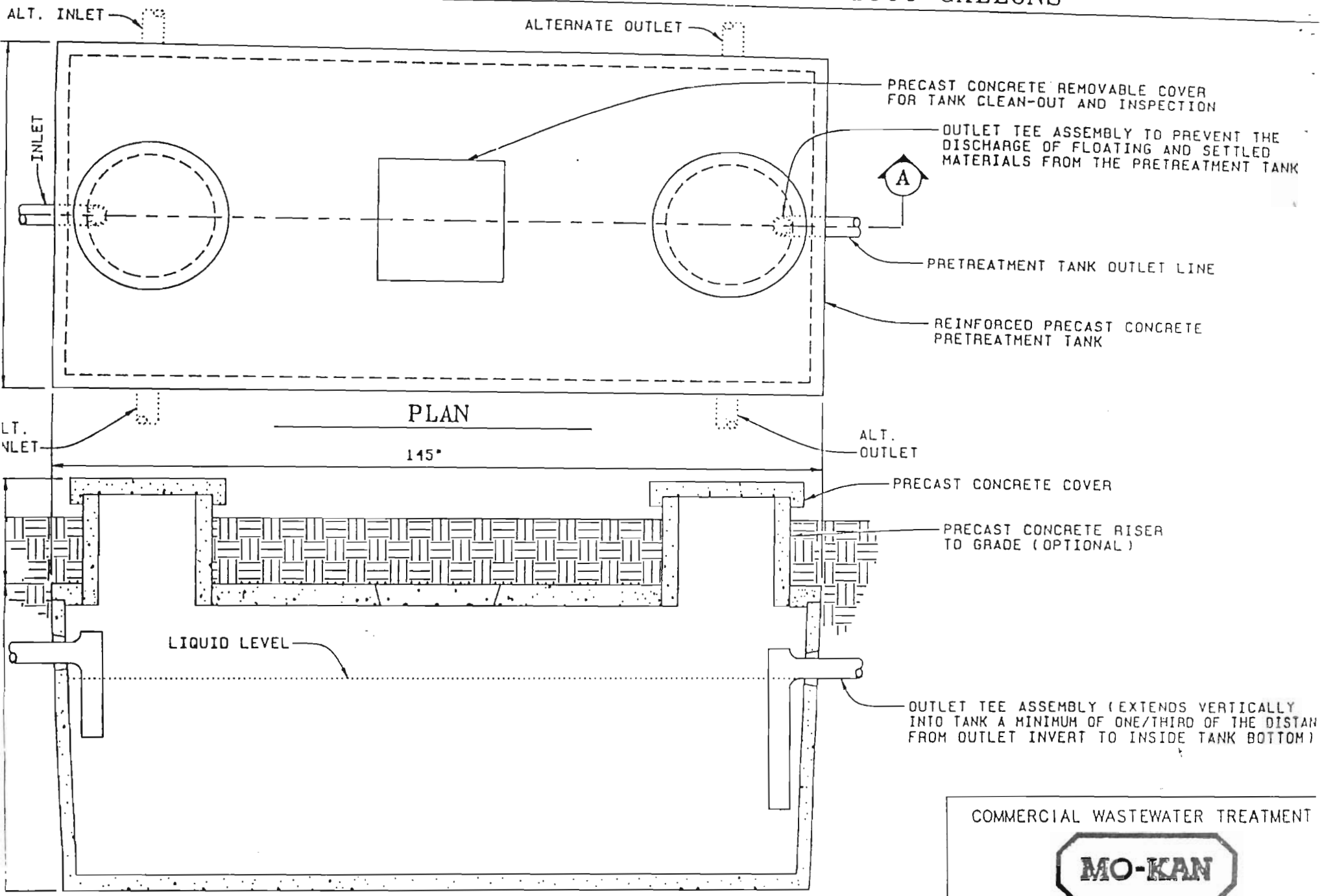

COMMERCIAL WASTEWATER TREATMENT

MO-KAN

SEWAGE TREATMENT CO.

AERATED SLUDGE HOLDING TANK 7800 GALLONS

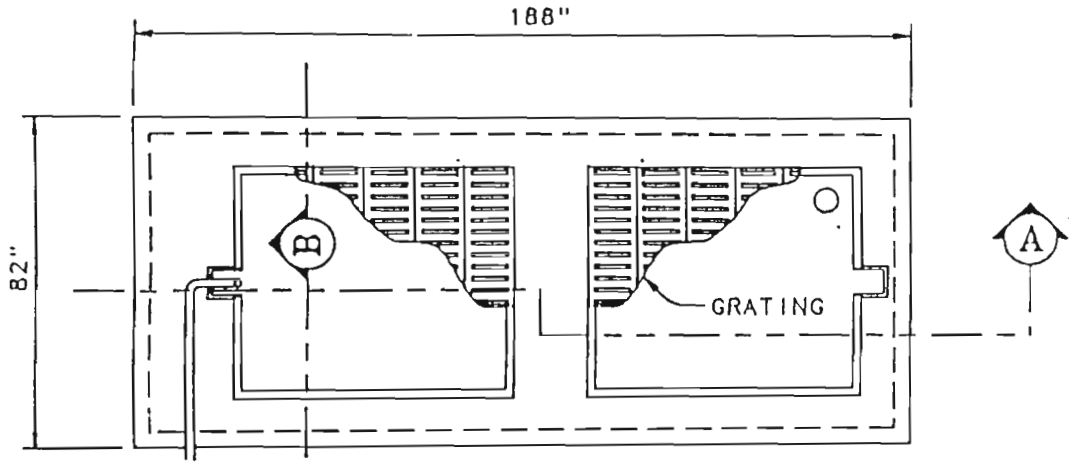

PLAN – A. S. H. TANK

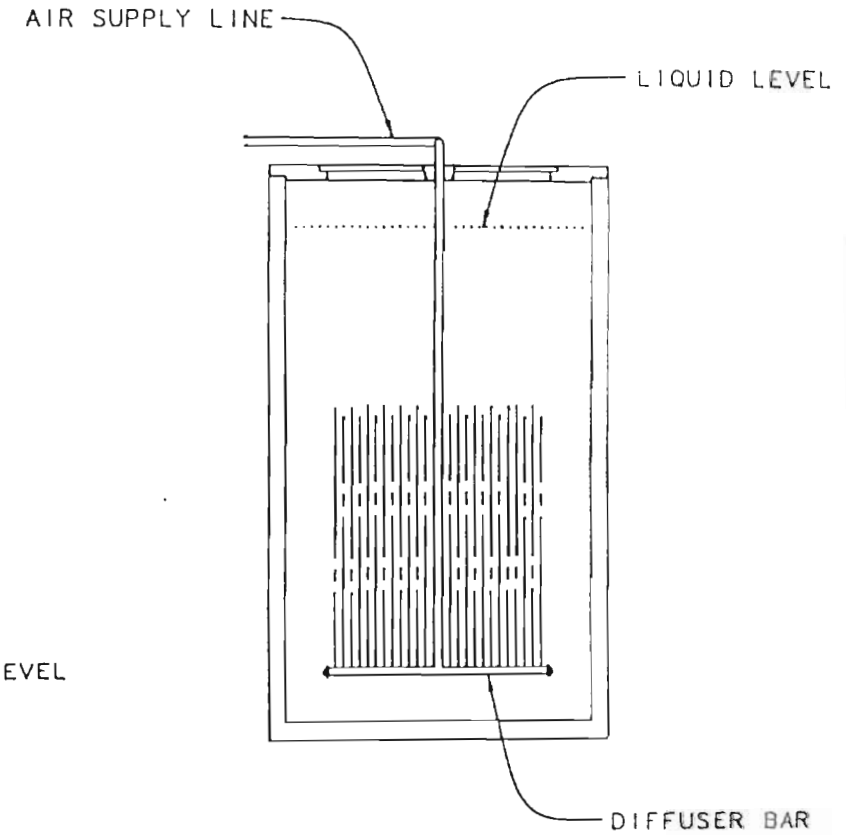

SECTION "B"

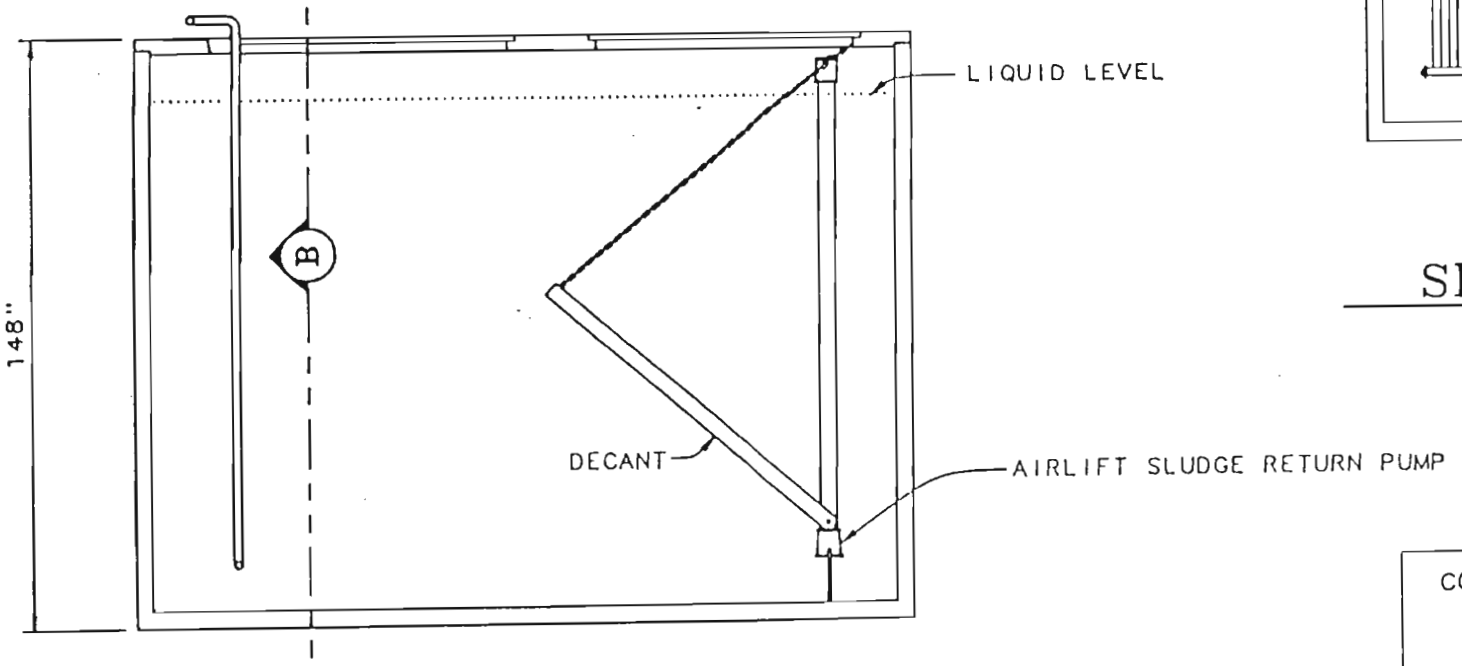

SECTION "A"

COMMERCIAL WASTEWATER TREATMENT

MO-KAN

SEWAGE TREATMENT CO.

FLOW MEASUREMENT BOX

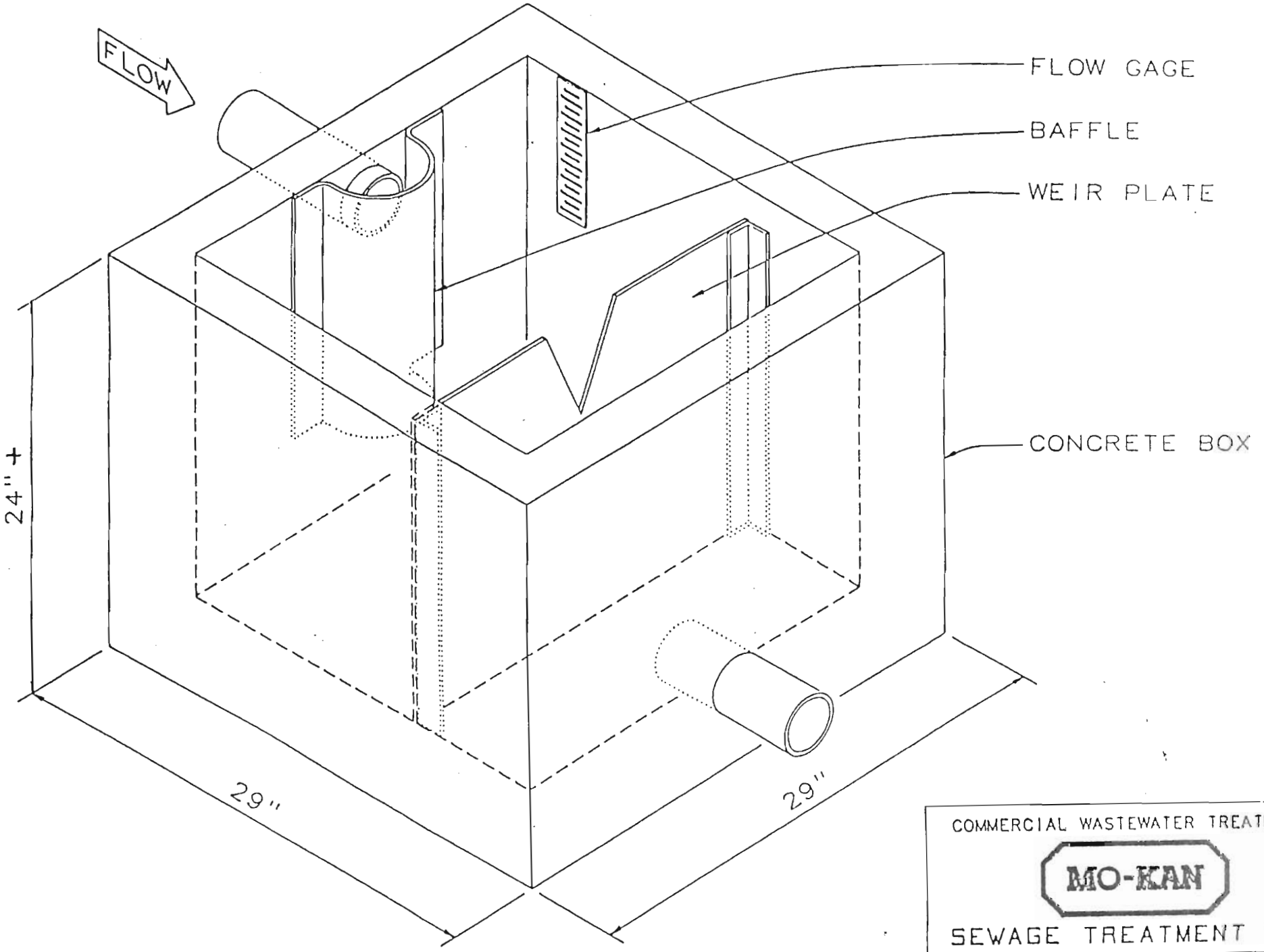

COMMERCIAL WASTEWATER TREATMENT

MO-KAN

SEWAGE TREATMENT CO

Attachment #2

Missouri Department of Natural Resources
Statement of Basis
Camp Palestine WWTF
NPDES #: MO-0116556
Johnson County

RECEIVED
MAR 7 2016
KANSAS CITY REGIONAL OFFICE

A Statement of Basis (Statement) gives pertinent information regarding the applicable regulations and rational for the development of the NPDES Missouri State Operating Permit (operating permit). This Statement includes Wasteload Allocations, Water Quality Based Effluent Limitations, and Reasonable Potential Analysis calculations as well as any other calculations that effect the effluent limitations of this operating permit. This Statement does not pertain to operating permits that include sewage sludge land application plans and variance procedures, and does not include the public comment process for this operating permit.

A Statement is not an enforceable part of an operating permit.

Part I – Facility Information

Facility Type: Church Camp
Facility SIC Code(s): 7033

Facility Description:
Extended aeration/aerobic digester/sludge disposal by contract hauler.

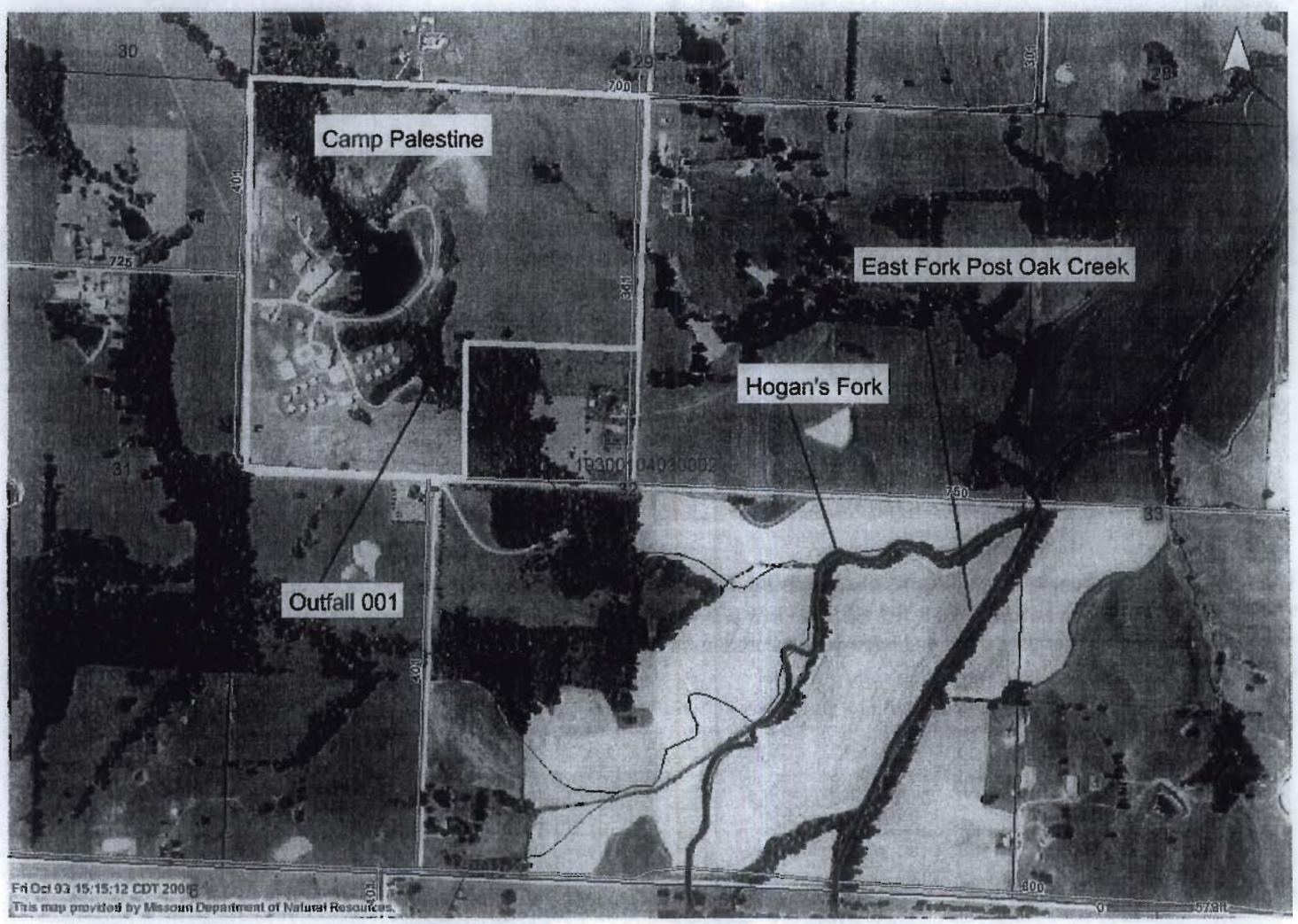

Camp Palestine

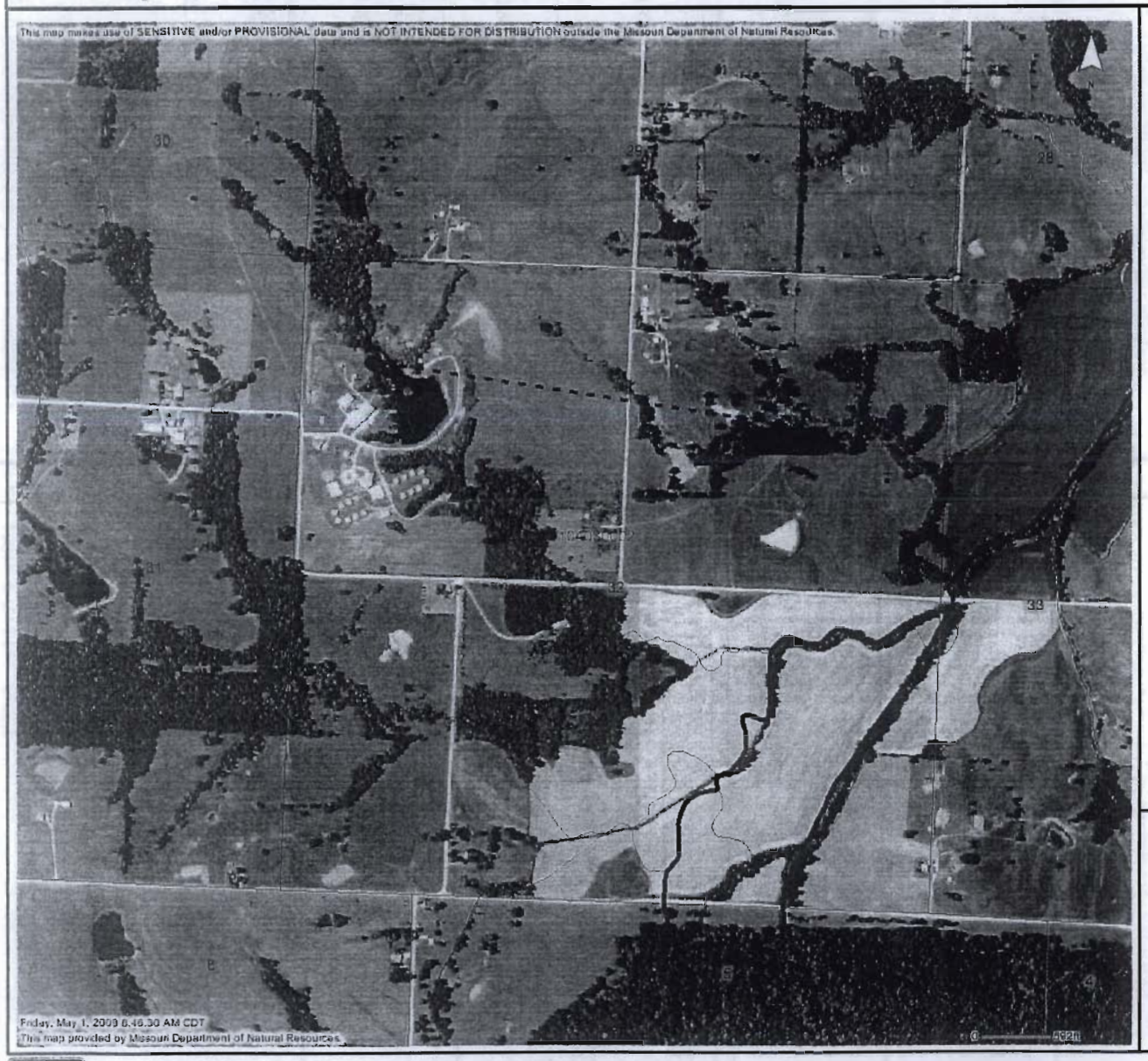

Legend

NPDES Outfalls
- AFO-CAFO
- MUNICIPAL
- NON-MUNICIPAL

NPDES Stormwater
WQS Table E (P)
WQS Table E (L)
WQS Table D
Losing Streams
WQS - Table H
WQS - Table G
NHD 1:24K Flowlines
Public Land Survey System
14 Digit Watershed Boundary
County Boundary
Impaired Lakes 2006 - 303(d)
Impaired Streams 2006 - 303(d)
Biological Reference Stream Segments

View Scale 1:16,170

Disclaimer: Although this map has been compiled by the Missouri Department of Natural Resources, no warranty, expressed or implied, is made by the department as to the accuracy of the data and related materials. The act of distribution shall not constitute any such warranty, and no responsibility is assumed by the department in the use of these data or related materials.

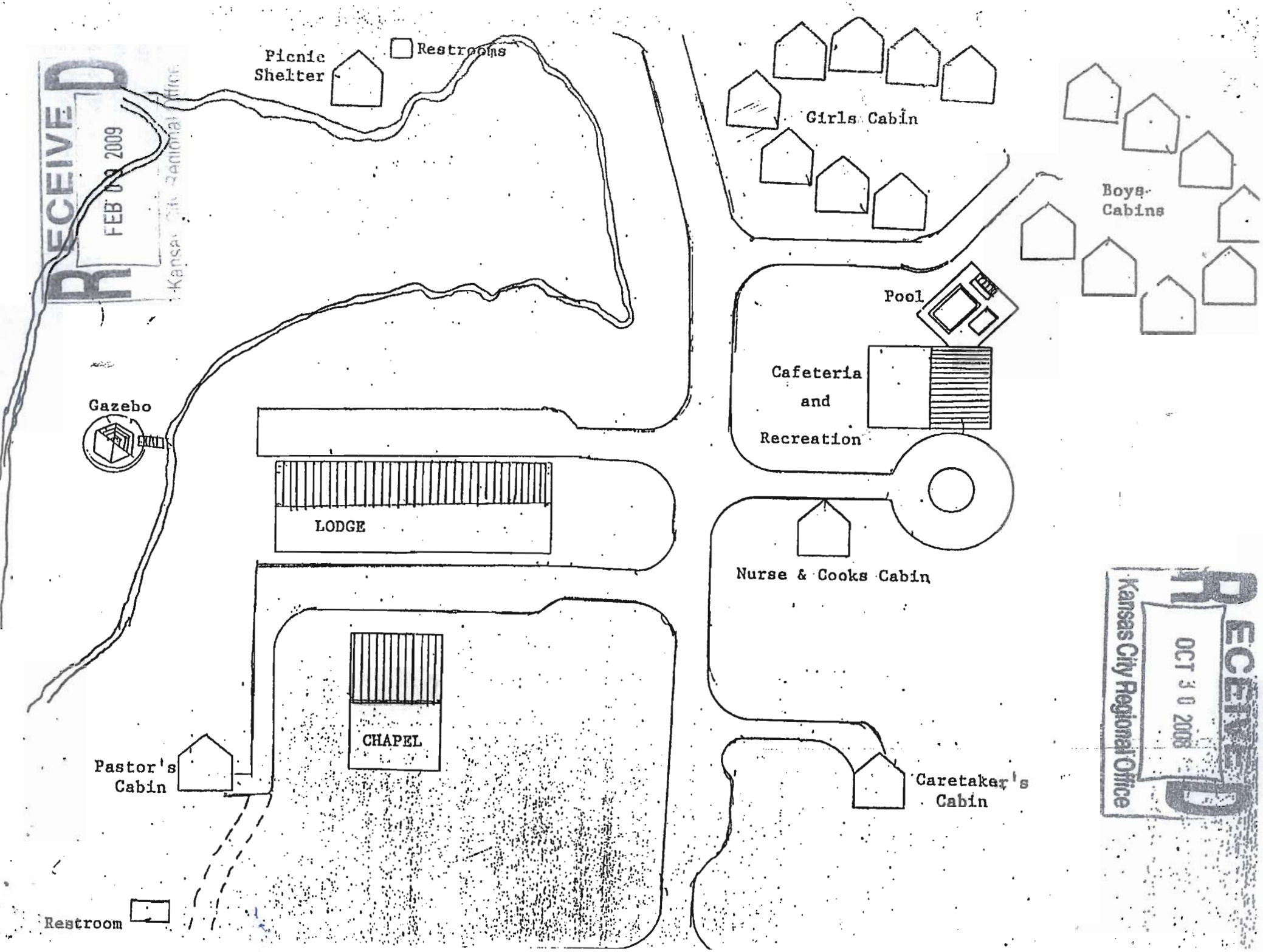

RECEIVED
FEB 03 2009
Kansas City Regional Office

RECEIVED
OCT 30 2008
Kansas City Regional Office

Advanced Map Viewer

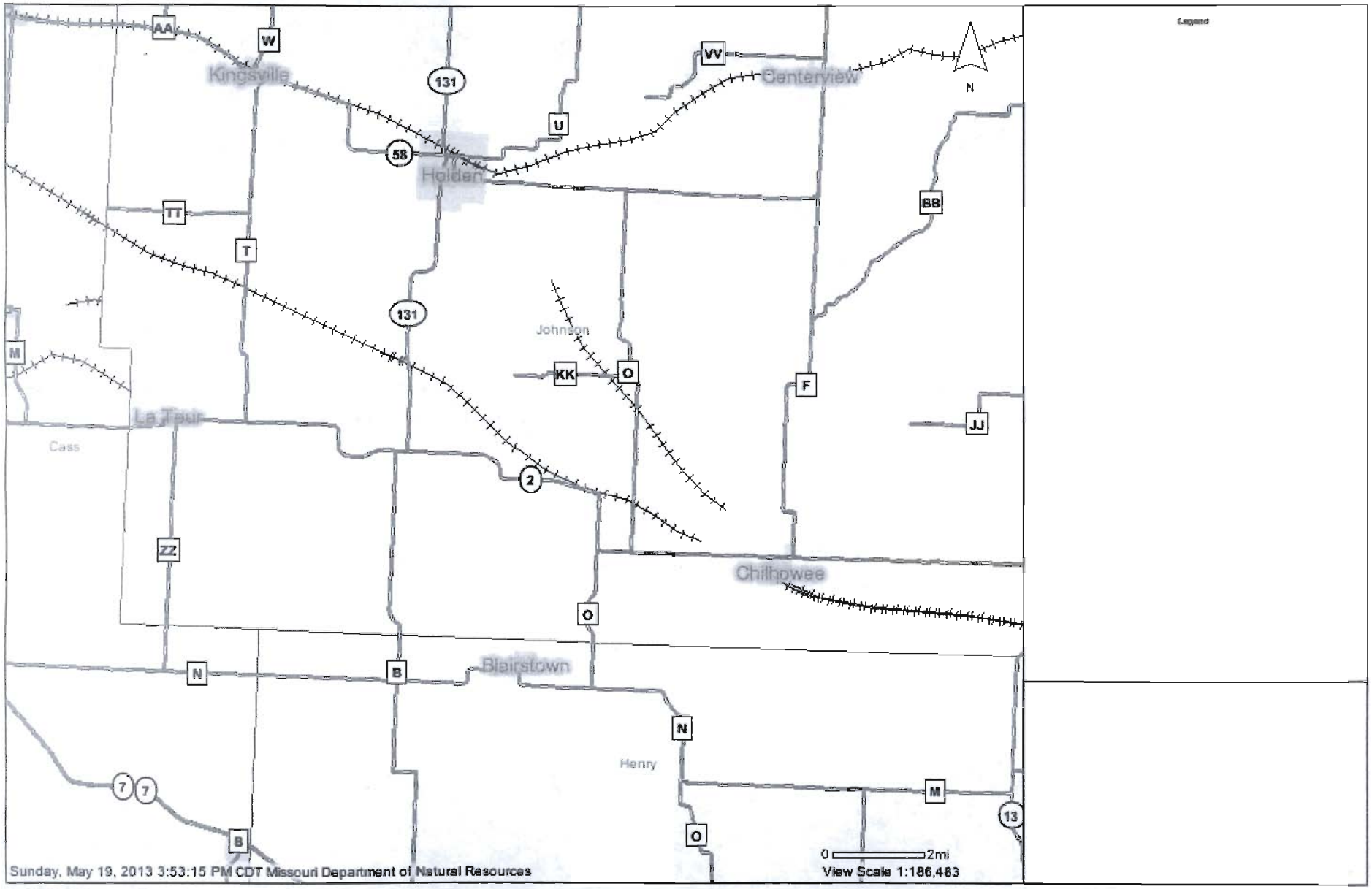

Missouri Department of Natural Resources

Disclaimer: Although this map has been compiled by the Missouri Department of Natural Resources, no warranty, expressed or implied, is made by the department as to the accuracy of the data and related materials. The act of distribution shall not constitute any such warranty, and no responsibility is assumed by the department in the use of these data or related materials.

Bird's eye
SW 730 Rd
SW 730 Rd
SW 730 Rd
SW 401 Rd
SW 750th Rd