STATE OF MISSOURI

DEPARTMENT OF NATURAL RESOURCES

MISSOURI CLEAN WATER COMMISSION

MISSOURI STATE OPERATING PERMIT

In compliance with the Missouri Clean Water Law, (Chapter 644 R.S. Mo. as amended, hereinafter, the Law), and the Federal Water Pollution Control Act (Public Law 92-500, 92nd Congress) as amended,

Permit No.	MO-0041203
Owner:	City of LaGrange
Address:	118 South Main, LaGrange, MO 63448
Continuing Authority:	Same as above
Address:	Same as above
Facility Name:	LaGrange Wastewater Treatment Plant
Facility Address:	403 South Main, LaGrange, MO 63448
Legal Description:	See Page 2
UTM Coordinates:	See Page 2
Receiving Stream:	See Page 2
First Classified Stream and ID:	See Page 2
USGS Basin & Sub-watershed No.:	See Page 2

is authorized to discharge from the facility described herein, in accordance with the effluent limitations and monitoring requirements as set forth herein:

FACILITY DESCRIPTION

See Page 2

This permit authorizes only wastewater discharges under the Missouri Clean Water Law and the National Pollutant Discharge Elimination System; it does not apply to other regulated areas. This permit may be appealed in accordance with Section 621.250 RSMo, Section 640.013 RSMo and Section 644.051.6 of the Law.

February 1, 2016
Effective Date

Sara Parker Pauley, Director, Department of Natural Resources

March 31, 2018
Expiration Date

John Madras, Director, Water Protection Program

FACILITY DESCRIPTION (continued):

Outfall #001 – POTW – SIC #4952
The use or operation of this facility shall be by or under the supervision of a Certified "A" Operator.
Influent lift station / mechanical grit screen / biological phosphorus removal tank / activated sludge / final clarifiers / UV disinfection / aerobic sludge digesters / sludge dewatering belt press / sludge is land applied or landfilled
Design population equivalent is 3,000.
Design flow is 300,000 gallons per day.
Actual flow is 212,000 gallons per day.
Design sludge production is 89.4 dry tons/year.

Legal Description:	SW ¼, NE ¼, SW ¼, Sec. 31, T61N, R5W, Lewis County
UTM Coordinates:	X=628173, Y=4433097
Receiving Stream:	Mississippi River (P)
First Classified Stream and ID:	Mississippi River (P) (1)
USGS Basin & Sub-watershed No.:	(07110001-1005)

Permitted Feature #SM1 – Instream Monitoring
Instream monitoring location – Upstream – See Special Condition #21

OUTFALL #001	TABLE A-1. FINAL EFFLUENT LIMITATIONS AND MONITORING REQUIREMENTS	PAGE NUMBER 3 of 9
		PERMIT NUMBER MO-0041203

The permittee is authorized to discharge from outfall(s) with serial number(s) as specified in the application for this permit. The final effluent limitations shall become effective on **February 1, 2016** and remain in effect until expiration of the permit. Such discharges shall be controlled, limited and monitored by the permittee as specified below:

EFFLUENT PARAMETER(S)	UNITS	FINAL EFFLUENT LIMITATIONS			MONITORING REQUIREMENTS	
		DAILY MAXIMUM	WEEKLY AVERAGE	MONTHLY AVERAGE	MEASUREMENT FREQUENCY	SAMPLE TYPE
Flow (Note 1)	MGD	*		*	once/weekday***	24 hr. Total
Biochemical Oxygen Demand$_5$	mg/L		45	30	once/month	composite**
Total Suspended Solids	mg/L		45	30	once/month	composite**
E. coli (Note 2)	#/100mL		630	126	once/week	grab
Ammonia as N	mg/L	*		*	once/month	grab
MONITORING REPORTS SHALL BE SUBMITTED MONTHLY; THE FIRST REPORT IS DUE MARCH 28, 2016. THERE SHALL BE NO DISCHARGE OF FLOATING SOLIDS OR VISIBLE FOAM IN OTHER THAN TRACE AMOUNTS.						
Total Phosphorus	mg/L	*		*	once/quarter *****	grab
Total Nitrogen	mg/L	*		*	once/quarter *****	grab
Oil & Grease	mg/L	15		10	once/quarter *****	grab
MONITORING REPORTS SHALL BE SUBMITTED QUARTERLY; THE FIRST REPORT IS DUE APRIL 28, 2016.						
EFFLUENT PARAMETER(S)	UNITS	MINIMUM		MAXIMUM	MEASUREMENT FREQUENCY	SAMPLE TYPE
pH – Units ****	SU	6.0		9.0	once/month	grab
MONITORING REPORTS SHALL BE SUBMITTED MONTHLY; THE FIRST REPORT IS DUE MARCH 28, 2016.						

* Monitoring requirement only.
** A 24-hour composite sample is composed of 48 aliquots (subsamples) collected at 30 minute intervals by an automatic sampling device.
*** Once each weekday means: Monday, Tuesday, Wednesday, Thursday, and Friday.
**** pH is measured in pH units and is not to be averaged.
***** See table below for quarterly sampling requirements.

Minimum Sampling Requirements			
Quarter	**Months**	**Total Phosphorus & Total Nitrogen**	**Report is Due**
First	January, February, March	Sample at least once during any month of the quarter	April 28th
Second	April, May, June	Sample at least once during any month of the quarter	July 28th
Third	July, August, September	Sample at least once during any month of the quarter	October 28th
Fourth	October, November, December	Sample at least once during any month of the quarter	January 28th

Note 1 - Reported as influent flow. Discharge Monitoring Reports (DMRs) will specify that flow is interpolated from influent flow data.

Note 2 - Effluent limitations and monitoring requirements for *E. coli* are applicable only during the recreational season from April 1 through October 31. The Monthly Average Limit for *E. coli* is expressed as a geometric mean. The Weekly Average for *E. coli* will be expressed as a geometric mean if more than one (1) sample is collected during a calendar week (Sunday through Saturday).

OUTFALL #001	TABLE A-2. WHOLE EFFLUENT TOXICITY FINAL EFFLUENT LIMITATIONS AND MONITORING REQUIREMENTS	PAGE NUMBER 4 of 9
		PERMIT NUMBER MO-0041203

The permittee is authorized to discharge from outfall(s) with serial number(s) as specified in the application for this permit. The final effluent limitations shall become effective on **February 1, 2016** and remain in effect until expiration of the permit. Such discharges shall be controlled, limited and monitored by the permittee as specified below:

EFFLUENT PARAMETER(S)	UNITS	FINAL EFFLUENT LIMITATIONS			MONITORING REQUIREMENTS	
		DAILY MAXIMUM	WEEKLY AVERAGE	MONTHLY AVERAGE	MEASUREMENT FREQUENCY	SAMPLE TYPE
Acute Whole Effluent Toxicity (Note 3)	TU_a	*			once/permit cycle	composite**

MONITORING REPORTS SHALL BE SUBMITTED ONCE PER PERMIT CYCLE; THE FIRST REPORT IS DUE JANUARY 28, 2017.

* Monitoring requirement only.

** A 24-hour composite sample is composed of 48 aliquots (subsamples) collected at 30 minute intervals by an automatic sampling device.

Note 3 – See Special Condition #20 for additional requirements.

TABLE B.
INFLUENT MONITORING REQUIREMENTS

The facility is required to meet a removal efficiency of 85% or more as a monthly average. The monitoring requirements shall become effective on **February 1, 2016** and remain in effect until expiration of the permit. To determine removal efficiencies, the influent wastewater shall be monitored by the permittee as specified below:

SAMPLING LOCATION AND PARAMETER(S)	UNITS	MONITORING REQUIREMENTS	
		MEASUREMENT FREQUENCY	SAMPLE TYPE
Biochemical Oxygen $Demand_5$	mg/L	once/month	composite**
Total Suspended Solids	mg/L	once/month	composite**

MONITORING REPORTS SHALL BE SUBMITTED MONTHLY; THE FIRST REPORT IS DUE MARCH 28, 2016.

** A 24-hour composite sample is composed of 48 aliquots (subsamples) collected at 30 minute intervals by an automatic sampling device. For 10 CSR 20-9.010 operational monitoring, the influent Total Suspended Solids sample type may be grab for the once per week sample.

PERMITTED FEATURE #SM1	TABLE C-1. INSTREAM MONITORING REQUIREMENTS	PAGE NUMBER 5 of 9
		PERMIT NUMBER MO-0041203

The monitoring requirements shall become effective on **February 1, 2016** and remain in effect until expiration of the permit.

PARAMETER(S)	UNITS	MONITORING REQUIREMENTS				
		DAILY MAXIMUM		MONTHLY AVERAGE	MEASUREMENT FREQUENCY	SAMPLE TYPE
Total Phosphorus	mg/L	*		*	once/quarter *****	grab
Total Nitrogen	mg/L	*		*	once/quarter *****	grab

MONITORING REPORTS SHALL BE SUBMITTED QUARTERLY; THE FIRST REPORT IS DUE APRIL 28, 2016.

* Monitoring requirement only.
***** See table below for quarterly sampling

Minimum Sampling Requirements			
Quarter	**Months**	**Total Phosphorus & Total Nitrogen**	**Report is Due**
First	January, February, March	Sample at least once during any month of the quarter	April 28th
Second	April, May, June	Sample at least once during any month of the quarter	July 28th
Third	July, August, September	Sample at least once during any month of the quarter	October 28th
Fourth	October, November, December	Sample at least once during any month of the quarter	January 28th

D. STANDARD CONDITIONS

In addition to specified conditions stated herein, this permit is subject to the attached Parts I, II, & III standard conditions dated August 1, 2014, May 1, 2013, and March 1, 2015, and hereby incorporated as though fully set forth herein.

E. SPECIAL CONDITIONS

1. This permit establishes final ammonia limitations based on Missouri's current Water Quality Standard. On August 22, 2013, the U.S. Environmental Protection Agency (EPA) published a notice in the Federal Register announcing of the final national recommended ambient water quality criteria for protection of aquatic life from the effects of ammonia in freshwater. The EPA's guidance, Final Aquatic Life Ambient Water Quality Criteria for Ammonia – Fresh Water 2013, is not a rule, nor automatically part of a state's water quality standards. States must adopt new ammonia criteria consistent with EPA's published ammonia criteria into their water quality standards that protect the designated uses of the water bodies. The Department of Natural Resources has initiated stakeholder discussions on how to best incorporate these new criteria into the State's rules. A date for when this rule change will occur has not been determined. Also, refer to Section VI of this permit's factsheet for further information including estimated future effluent limits for this facility. It is recommended the permittee view the Department's 2013 EPA criteria Factsheet located at http://dnr.mo.gov/pubs/pub2481.htm.

2. This permit may be reopened and modified, or alternatively revoked and reissued, to:
   (a) Comply with any applicable effluent standard or limitation issued or approved under Sections 301(b)(2)(C) and (D), 304(b)(2), and 307(a) (2) of the Clean Water Act, if the effluent standard or limitation so issued or approved:
      (1) contains different conditions or is otherwise more stringent than any effluent limitation in the permit; or
      (2) controls any pollutant not limited in the permit.
   (b) Incorporate new or modified effluent limitations or other conditions, if the result of a waste load allocation study, toxicity test or other information indicates changes are necessary to assure compliance with Missouri's Water Quality Standards.
   (c) Incorporate new or modified effluent limitations or other conditions if, as the result of a watershed analysis, a Total Maximum Daily Load (TMDL) limitation is developed for the receiving waters which are currently included in Missouri's list of waters of the state not fully achieving the state's water quality standards, also called the 303(d) list.
   (d) Incorporate the requirement to develop a pretreatment program pursuant to 40 CFR 403.8(a) when the Director of the Water Protection Program determines that a pretreatment program is necessary due to any new introduction of pollutants into the Publically Owned Treatment Works or any substantial change in the volume or character of pollutants being introduced.

   The permit as modified or reissued under this paragraph shall also contain any other requirements of the Clean Water Act then applicable.

E. SPECIAL CONDITIONS (continued)

3. All outfalls must be clearly marked in the field. This does not include instream monitoring locations.

4. Permittee will cease discharge by connection to a facility with an area-wide management plan per 10 CSR 20-6.010(3)(B) within 90 days of notice of its availability.

5. Report as no-discharge when a discharge does not occur during the report period. For instream samples, report as No Flow if no stream flow occurs during the report period, or report as Frozen if the stream is frozen and samples cannot be collected.

6. Water Quality Standards
   (a) To the extent required by law, discharges to waters of the state shall not cause a violation of water quality standards rule under 10 CSR 20-7.031, including both specific and general criteria.
   (b) General Criteria. The following general water quality criteria shall be applicable to all waters of the state at all times including mixing zones. No water contaminant, by itself or in combination with other substances, shall prevent the waters of the state from meeting the following conditions:
      (1) Waters shall be free from substances in sufficient amounts to cause the formation of putrescent, unsightly or harmful bottom deposits or prevent full maintenance of beneficial uses;
      (2) Waters shall be free from oil, scum and floating debris in sufficient amounts to be unsightly or prevent full maintenance of beneficial uses;
      (3) Waters shall be free from substances in sufficient amounts to cause unsightly color or turbidity, offensive odor or prevent full maintenance of beneficial uses;
      (4) Waters shall be free from substances or conditions in sufficient amounts to result in toxicity to human, animal or aquatic life;
      (5) There shall be no significant human health hazard from incidental contact with the water;
      (6) There shall be no acute toxicity to livestock or wildlife watering;
      (7) Waters shall be free from physical, chemical or hydrologic changes that would impair the natural biological community;
      (8) Waters shall be free from used tires, car bodies, appliances, demolition debris, used vehicles or equipment and solid waste as defined in Missouri's Solid Waste Law, section 260.200, RSMo, except as the use of such materials is specifically permitted pursuant to section 260.200-260.247.

7. Changes in existing pollutants or the addition of new pollutants to the treatment facility

   The permittee must provide adequate notice to the Director of the following:
   (a) Any new introduction of pollutants into the POTW from an indirect discharger which would be subject to section 301 or 306 of CWA if it were directly discharging those pollutants; and
   (b) Any substantial change in the volume or character of pollutants being introduced into that POTW by a source introducing pollutants into the POTW at the time of issuance of the permit.
   (c) For purposes of this paragraph, adequate notice shall include information on;
      (1) the quality and quantity of effluent introduced into the POTW, and
      (2) any anticipated impact of the change on the quantity or quality of effluent to be discharged from the POTW.

8. Reporting of Non-Detects:
   (a) An analysis conducted by the permittee or their contracted laboratory shall be conducted in such a way that the precision and accuracy of the analyzed result can be enumerated.
   (b) The permittee shall not report a sample result as “Non-Detect” without also reporting the detection limit of the test. Reporting as “Non Detect” without also including the detection limit will be considered failure to report, which is a violation of this permit.
   (c) The permittee shall provide the “Non-Detect” sample result using the less than sign and the minimum detection limit (e.g. <10).
   (d) The permittee shall use one-half of the detection limit for the non-detect result when calculating monthly averages.
   (e) See Standard Conditions Part I, Section A, #4 regarding proper detection limits used for sample analysis.

9. It is a violation of the Missouri Clean Water Law to fail to pay fees associated with this permit (644.055 RSMo).

10. The permittee shall comply with any applicable requirements listed in 10 CSR 20-9, unless the facility has received written notification that the Department has approved a modification to the requirements. The monitoring frequencies contained in this permit shall not be construed by the permittee as a modification of the monitoring frequencies listed in 10 CSR 20-9. If a modification of the monitoring frequencies listed in 10 CSR 20-9 is needed, the permittee shall submit a written request to the Department for review and, if deemed necessary, approval.

E. SPECIAL CONDITIONS (continued)

11. The permittee shall develop and implement a program for maintenance and repair of the collection system. The recommended guidance is the US EPA's Guide For Evaluating Capacity, Management, Operation, And Maintenance (CMOM) Programs At Sanitary Sewer Collection Systems (Document number EPA 305-B-05-002) or the Departments' CMOM Model located at http://dnr.mo.gov/env/wpp/permits/docs/cmom-template.doc. For additional information regarding the Departments' CMOM Model, see the CMOM Plan Model Guidance document at http://dnr.mo.gov/pubs/pub2574.htm. The permittee shall report all bypasses and Sanitary Sewer Overflows (SSO) using the Sanitary Sewer Overflow/Facility Bypass Application, located at http://dnr.mo.gov/modnrcag/.

    The permittee shall also submit a report to the Northeast Regional Office annually, by January 28th, for the previous calendar year. The report shall contain the following information:
    (a) A summary of the efforts to locate and eliminate sources of excessive infiltration and inflow into the collection system serving the facility for the previous year.
    (b) A summary of the general maintenance and repairs to the collection system serving the facility for the previous year.
    (c) A summary of any planned maintenance and repairs to the collection system serving the facility for the upcoming calendar year. This list shall include locations (GPS, 911 address, manhole number, etc.) and actions to be taken.

12. Bypasses are not authorized at this facility unless they meet the criteria in 40 CFR 122.41(m). If a bypass occurs, the permittee shall report in accordance to 40 CFR 122.41(m)(3), and with Standard Condition Part I, Section B, subsection 2.b. Bypasses are to be reported to the Northeast Regional Office during normal business hours or the Environmental Emergency Response hotline at 573-634-2436 outside of normal business hours. Blending, which is the practice of combining a partially-treated wastewater process stream with a fully-treated wastewater process stream prior to discharge, is not considered a form of bypass. If the permittee wishes to utilize blending, the permittee shall file an application to modify this permit to facilitate the inclusion of appropriate monitoring conditions.

13. The facility must be sufficiently secured to restrict entry by children, livestock and unauthorized persons as well as to protect the facility from vandalism.

14. At least one gate must be provided to access the wastewater treatment facility and provide for maintenance and mowing. The gate shall remain closed except when temporarily opened by; the permittee to access the facility, perform operational monitoring, sampling, maintenance, mowing, or for inspections by the Department. The gate shall be closed and locked when the facility is not staffed.

15. At least one (1) warning sign shall be placed on each side of the facility enclosure in such positions as to be clearly visible from all directions of approach. There shall also be one (1) sign placed for every five hundred feet (500') (150 m) of the perimeter fence. A sign shall also be placed on each gate. Minimum wording shall be SEWAGE TREATMENT FACILITY—KEEP OUT. Signs shall be made of durable materials with characters at least two inches (2") high and shall be securely fastened to the fence, equipment or other suitable locations.

16. An Operation and Maintenance (O & M) manual shall be maintained by the permittee and made available to the operator. The O & M manual shall include key operating procedures and a brief summary of the operation of the facility.

17. An all-weather access road shall be provided to the treatment facility.

18. The discharge from the wastewater treatment facility shall be conveyed to the receiving stream via a closed pipe or a paved or rip-rapped open channel. Sheet or meandering drainage is not acceptable. The outfall sewer shall be protected against the effects of floodwater, ice or other hazards as to reasonably insure its structural stability and freedom from stoppage. The outfall shall be maintained so that a sample of the effluent can be obtained at a point after the final treatment process and before the discharge mixes with the receiving waters.

19. Land application of biosolids shall be conducted in accordance with Standard Conditions III and a Department approved biosolids management plan. Land application of biosolids during frozen, snow covered, or saturated soil conditions in accordance with the additional requirements specified in WQ426 shall occur only with prior approval from the Department.

E. SPECIAL CONDITIONS (continued)

20. Acute Whole Effluent Toxicity (WET) tests shall be conducted as follows:

SUMMARY OF ACUTE WET TESTING FOR THIS PERMIT					
OUTFALL	AEC	Acute Toxic Unit (TU_a)	FREQUENCY	SAMPLE TYPE	MONTH
001	9.1%	*	once/permit cycle	24 hr. composite	Any

* Monitoring requirement only.

DILUTION SERIES						
100%	50%	25%	9.1%	6.25%	(Control) 100% upstream, if available	(Control) 100% Lab Water, also called synthetic water

(a) Freshwater Species and Test Methods

(1) Species and short-term test methods for estimating the acute toxicity of NPDES effluents are found in the most recent edition of *Methods for Measuring the Acute Toxicity of Effluents and Receiving Waters to Freshwater and Marine Organisms* (EPA/821/R-02/012; Table IA, 40 CFR Part 136). The permittee shall concurrently conduct 48-hour static non-renewal toxicity tests with the following vertebrate species:

- The fathead minnow, *Pimephales promelas* (Acute Toxicity Test Method 2000.0).

And the following invertebrate species:

- The daphnid, *Ceriodaphnia dubia* (Acute Toxicity Test Method 2002.0).

(2) Chemical and physical analysis of an upstream control sample and effluent sample shall occur immediately upon being received by the laboratory, prior to any manipulation of the effluent sample beyond preservation methods consistent with federal guidelines for WET testing that are required to stabilize the sample during shipping. Where upstream receiving water is not available, synthetic laboratory control water may be used.

(3) Test conditions must meet all test acceptability criteria required by the EPA Method used in the analysis.

(4) Any and all chemical or physical analysis of the effluent sample performed in conjunction with the WET test shall be performed at the 100% Effluent concentration in addition to analysis performed upon any other effluent concentration.

(5) All chemical analyses shall be performed and results shall be recorded in the appropriate field of the report form. The parameters for chemical analysis include Temperature (°C), pH (SU), Conductivity (µmohs/cm), Dissolved Oxygen (mg/L), Total Residual Chlorine (mg/L), Un-ionized Ammonia (mg/L), Total Alkalinity (mg/L), and Total Hardness (mg/L).

(b) Reporting of Acute Toxicity Monitoring Results

(1) WET test results shall be submitted to the Northeast Regional Office, or by eDMR, with the permittee's Discharge Monitoring Reports annually by **Month, 28, 20XX**. The submittal shall include:

i. A full laboratory report for all toxicity testing.
ii. Copies of chain-of-custody forms.
iii. The WET form provided by the Department upon permit issuance.

(2) The report must include a quantification of acute toxic units ($TU_a = 100/LC_{50}$) reported according to the test methods manual chapter on report preparation and test review. The Lethal Concentration, 50 Percent (LC_{50}) is the toxic or effluent concentration that would cause death in 50 percent of the test organisms over a specified period of time.

(c) Permit Reopener for Acute Toxicity

In accordance with 40 CFR Parts 122 and 124, this permit may be modified to include effluent limitations or permit conditions to address acute toxicity in the effluent or receiving waterbody, as a result of the discharge; or to implement new, revised, or newly interpreted water quality standards applicable to acute toxicity.

E. SPECIAL CONDITIONS (continued)

21. Receiving Water Monitoring Conditions
    (a) Upstream receiving water samples should be collected at a point upstream from any influence of the effluent, where the water is visibly flowing down stream. In the event that a safe, accessible location is not present at the location listed, a suitable location can be negotiated with the Department. Samples should be taken at least four feet from the bank or from the middle of the stream (whichever is less) and 6-inches below the surface.
    (b) When conducting in-stream monitoring, the permittee shall record observations that include: the time of day, weather conditions, unusual stream characteristics (e.g., septic conditions, algae growth, etc.), the stream segment (e.g., riffle, pool or run) from where the sample was collected. These observations shall be submitted with the sample results.
    (c) Samples shall not be collected from areas with especially turbulent flow, still water or from the stream bank, unless these conditions are representative of the stream reach or no other areas are available for sample collection. Sampling should not be made when significant precipitation has occurred recently. The sampling event should be terminated and rescheduled if any of the following conditions occur:
        - If turbidity in the stream increases notably; or
        - If rainfall over the past two weeks exceeds 2.5 inches or exceeds 1 inch in the last 24 hours
    (d) Always use the correct sampling technique and handling procedure specified for the parameter of interest. Please refer to the latest edition of Standard Methods for the Examination of Water and Wastewater for further discussion of proper sampling techniques. All analyses must be conducted in accordance with an approved EPA method. Meters shall be calibrated immediately (within 1 hour) prior to the sampling event.
    (e) Please contact the Department if you need additional instructions or assistance.

MISSOURI DEPARTMENT OF NATURAL RESOURCES
FACT SHEET
FOR THE PURPOSE OF RENEWAL
OF
MO-0041203
LAGRANGE WASTEWATER TREATMENT PLANT

The Federal Water Pollution Control Act ("Clean Water Act" Section 402 Public Law 92-500 as amended) established the National Pollution Discharge Elimination System (NPDES) permit program. This program regulates the discharge of pollutants from point sources into the waters of the United States, and the release of stormwater from certain point sources. All such discharges are unlawful without a permit (Section 301 of the "Clean Water Act"). After a permit is obtained, a discharge not in compliance with all permit terms and conditions is unlawful. Missouri State Operating Permits (MSOPs) are issued by the Director of the Missouri Department of Natural Resources (Department) under an approved program, operating in accordance with federal and state laws (Federal "Clean Water Act" and "Missouri Clean Water Law" Section 644 as amended). MSOPs are issued for a period of five (5) years unless otherwise specified.

As per [40 CFR Part 124.8(a)] and [10 CSR 20-6.020(1)2.] a Factsheet shall be prepared to give pertinent information regarding the applicable regulations, rationale for the development of effluent limitations and conditions, and the public participation process for the Missouri State Operating Permit (operating permit) listed below.

A Factsheet is not an enforceable part of an operating permit.

This Factsheet is for a Minor

Part I – Facility Information

Facility Type: POTW - SIC #4952

Facility Description:
Influent lift station / mechanical grit screen / biological phosphorus removal tank / activated sludge / final clarifiers / UV disinfection / aerobic sludge digesters / sludge dewatering belt press / sludge is land applied or landfilled

Have any changes occurred at this facility or in the receiving water body that effects effluent limit derivation?
☐ - Yes;
☒ - No.

Application Date: 06/17/2013 Expiration Date: 01/08/2014

OUTFALL(S) TABLE:

OUTFALL	DESIGN FLOW (CFS)	TREATMENT LEVEL	EFFLUENT TYPE
#001	0.465	Secondary	Domestic

Facility Performance History:
This facility was last inspected on August 25, 2009. The conditions of the facility at the time of inspection were found to be satisfactory.

Comments:
Changes in this permit include the addition of Total Phosphorus and Total Nitrogen, and the removal of Temperature. See Part VII of the Fact Sheet for further information regarding the addition and removal of effluent parameters. Special conditions were updated to include the addition of inflow and infiltration reporting requirements, reporting of Non-detects, bypass reporting requirements, and the addition of instream monitoring requirements. The City provided the Department with a copy of a letter dated August 14, 2015, that was sent by the City to Allied Waste Backridge Landfill termination their Leachate Disposal Agreement that was dated June 12, 2006. As a result of this, the draft permit was updated, removing those parameters and monitoring requirements associated with the City's previous acceptance of leachate into the wastewater treatment plant. The City has requested the approval of an alternative test method for analysis for Total Nitrogen. As part of the Departments approval, the City is required to conduct ten (10) split samplings, with the City conducting the sample analysis in accordance with the approved alternate test procedure and the other sample by a laboratory of their choosing using an approved test method. The split samples must be collected, preserved, and analyzed in accordance with the proper sampling and preservation requirements listed in the methods used, including any quality control or quality assurance procedures. The City shall provide the data to the Department at the end of the testing timeline for review. If the data shows that the difference between the two methods is statistically the same or the differences fall within the precision and bias of the procedures, the Department will provide the City with written approval for the use of the alternate test method, otherwise the Department will provide written disapproval of the use.

Part II – Operator Certification Requirements

☒ - This facility is required to have a certified operator.

As per [10 CSR 20-6.010(8) Terms and Conditions of a Permit], the permittee shall operate and maintain facilities to comply with the Missouri Clean Water Law and applicable permit conditions and regulations. Operators or supervisors of operations at regulated wastewater treatment facilities shall be certified in accordance with [10 CSR 20-9.020(2)] and any other applicable state law or regulation. As per [10 CSR 20-9.020(2)(A)], requirements for operation by certified personnel shall apply to all wastewater treatment systems, if applicable, as listed below:

Owned or operated by or for a

- ☒ - Municipalities
- ☐ - State agency
- ☐ - Federal agency
- ☐ - Public Sewer District
- ☐ - County
- ☐ - Public Water Supply Districts
- ☐ - Private Sewer Company regulated by the Public Service Commission
- ☐ - State agency
- ☐ - Federal agency

Each of the above entities are only applicable if they have a Population Equivalent greater than two hundred (200) or fifty (50) or more service connections.

This facility currently requires an operator with an A Certification Level. Please see **Appendix - Classification Worksheet**. Modifications made to the wastewater treatment facility may cause the classification to be modified.

Operator's Name: Robert M. Henderson
Certification Number: 8449
Certification Level: A

The listing of the operator above only signifies that staff drafting this operating permit have reviewed appropriate Department records and determined that the name listed on the operating permit application has the correct and applicable Certification Level.

☐ - This facility is not required to have a certified operator.

Part III– Operational Monitoring

☐ - As per [10 CSR 20-9.010(4))], the facility is not required to conduct operational monitoring.

☒ - As per [10 CSR 20-9.010(4))], the facility is required to conduct operational monitoring.

Part IV – Receiving Stream Information

10 CSR 20-7.031 Missouri Water Quality Standards, the Department defines the Clean Water Commission water quality objectives in terms of "water uses to be maintained and the criteria to protect those uses." The receiving stream and/or 1st classified receiving stream's beneficial water uses to be maintained are located in the Receiving Stream Table located below in accordance with [10 CSR 20-7.031(4)].

RECEIVING STREAM(S) TABLE: OUTFALL #001

WATER-BODY NAME	CLASS	WBID	DESIGNATED USES*	12-DIGIT HUC	DISTANCE TO CLASSIFIED SEGMENT (MI)
Mississippi River	P	1	IRR, LWW, AQL, HHP, WBC-A,, SCR, DWS, IND	07110001	0

* - Irrigation (IRR), Livestock & Wildlife Watering (LWW), Protection of Warm Water Aquatic Life (AQL), Human Health Protection (HHP), Cool Water Fishery (CLF), Cold Water Fishery (CDF), Whole Body Contact Recreation – Category A (WBC-A), Whole Body Contact Recreation – Category B (WBC-B), Secondary Contact Recreation (SCR), Drinking Water Supply (DWS), Industrial (IND), Groundwater (GRW).

RECEIVING STREAM(S) LOW-FLOW VALUES:

RECEIVING STREAM (C, E, P, P1)	LOW-FLOW VALUES (CFS)*		
	1Q10	7Q10	30Q10
Mississippi River (P)	15100.37	19072.583	23115.04

* - Low Flow values for the Mississippi River obtained using USGS 05474500, Mississippi River at Keokuk, IA, 01-01-1970 - 05-31-2015. This is the nearest monitoring location with significant and relative flow data for the Mississippi River. To calculate estimated flows, the values obtained from the data from Keokuk Iowa had flow data from the Fox River and from the Des Moines River added as these flow enter the Mississippi River upstream of LaGrange. Flows from the USGS 05495000 from the Fox River, and USGS 05490600 from the Des Moines River were added to the calculated flows from the Mississippi River.

MIXING CONSIDERATIONS

MIXING CONSIDERATIONS TABLE:

MIXING ZONE (CFS) [10 CSR 20-7.031(5)(A)4.B.(II)(a)]			ZONE OF INITIAL DILUTION (CFS) [10 CSR 20-7.031(5)(A)4.B.(II)(b)]**		
1Q10	7Q10	30Q10	1Q10	7Q10	30Q10
3775.09	4768.15	5778.76	4.65	4.65	4.65

** - Zone of initial dilution—one tenth (0.1) of the mixing zone width, cross sectional area, or volume of flow and no more than ten (10) times the effluent design flow volume unless the use of diffusers or specific mixing zone studies can justify more dilution. The limiting factor for the Zone of Initial Dilution is the requirement that No more than 10 times the effluent design volume, which is the design flow in cfs, 0.465 x 10 = 4.65 cfs.

RECEIVING STREAM MONITORING REQUIREMENTS:

Facilities with a design flow greater than 100,000 gallons per day are required to sample their effluent quarterly for Total Phosphorus and Total Nitrogen per 10 CSR 20-7.015(9)(D)7. Upstream monitoring for these parameters is necessary to determine background concentrations in order to complete calculations that determine instream nutrient loading.

Permitted Feature SM1. (Upstream)

Receiving Water Body's Water Quality
No stream survey has been conducted for this facility.

Part V – Rationale and Derivation of Effluent Limitations & Permit Conditions

ALTERNATIVE EVALUATIONS FOR NEW FACILITIES:
As per [10 CSR 20-7.015(4)(A)], discharges to losing streams shall be permitted only after other alternatives including land application, discharges to a gaining stream and connection to a regional wastewater treatment facility have been evaluated and determined to be unacceptable for environmental and/or economic reasons.

☐ - The facility discharges to a Losing Stream as defined by [10 CSR 20-2.010(36)] & [10 CSR 20-7.031(1)(N)], or is an existing facility, and has submitted an alternative evaluation.

☒ - The facility does not discharge to a Losing Stream as defined by [10 CSR 20-2.010(36)] & [10 CSR 20-7.031(1)(N)], or is an existing facility.

ANTI-BACKSLIDING:
A provision in the Federal Regulations [CWA §303(d)(4); CWA §402(o); 40 CFR Part 122.44(l)] that requires a reissued permit to be as stringent as the previous permit with some exceptions.

☒ - Limitations in this operating permit for the reissuance of this permit conform to the anti-backsliding provisions of Section 402(o) of the Clean Water Act, and 40 CFR Part 122.44.

☒ - Information is available which was not available at the time of permit issuance (other than revised regulations, guidance, or test methods) and which would have justified the application of a less stringent effluent limitation at the time of permit issuance.

- Temperature was removed from the permit as there was no reasonable potential to violate Water Quality Standards observed.

☒ - The Department determines that technical mistakes or mistaken interpretations of law were made in issuing the permit under section 402(a)(1)(b).

- This permit changes WET test requirements for the facility from a pass/fail requirement to monitoring only for toxic units. This change reflects modifications to Missouri's Effluent Regulation found at 10 CSR 20-7.015. 40 CFR 122.44(d)(1)(ii) requires the Department to establish effluent limitations that control all parameters which have the reasonable potential to cause or contribute to an excursion above any state water quality standard, including state narrative criteria. The previous permit imposed a pass/fail limitation without collecting sufficient data to make a reasonable potential determination. Furthermore, the method of reporting associated with the pass/fail limitation prevented the Department from gathering the data necessary to make a finding of reasonable potential. Implementation of the toxic unit monitoring requirement will allow the Department to implement numeric acute criteria in accordance with water quality standards established under §303 of the CWA.

ANTIDEGRADATION:
In accordance with Missouri's Water Quality Standard [10 CSR 20-7.031(3)], the Department is to document by means of Antidegradation Review that the use of a water body's available assimilative capacity is justified. Degradation is justified by documenting the socio-economic importance of a discharging activity after determining the necessity of the discharge.

☒ - No degradation proposed and no further review necessary. Facility did not apply for authorization to increase pollutant loading or to add additional pollutants to their discharge.

☐ - This permit contains new and/or expanded discharge; please see **APPENDIX FOR ANTIDEGRADATION ANALYSIS.**

AREA-WIDE WASTE TREATMENT MANAGEMENT & CONTINUING AUTHORITY:
As per [10 CSR 20-6.010(3)(B)], …An applicant may utilize a lower preference continuing authority by submitting, as part of the application, a statement waiving preferential status from each existing higher preference authority, providing the waiver does not conflict with any area-wide management plan approved under section 208 of the Federal Clean Water Act or any other regional sewage service and treatment plan approved for higher preference authority by the Department.

BIOSOLIDS & SEWAGE SLUDGE:
Biosolids are solid materials resulting from domestic wastewater treatment that meet federal and state criteria for beneficial uses (i.e. fertilizer). Sewage sludge is solids, semi-solids, or liquid residue generated during the treatment of domestic sewage in a treatment works; including but not limited to, domestic septage; scum or solids removed in primary, secondary, or advanced wastewater treatment process; and a material derived from sewage sludge. Sewage sludge does not include ash generated during the firing of sewage sludge in a sewage sludge incinerator or grit and screening generated during preliminary treatment of domestic sewage in a treatment works. Additional information regarding biosolids and sludge is located at the following web address: http://extension.missouri.edu/main/DisplayCategory.aspx?C=74, items WQ422 through WQ449.

☒ - Permittee land applies biosolids in accordance with Standard Conditions III and a Department approved biosolids management plan.

☐ - This condition is not applicable to the permittee for this facility.

COMPLIANCE AND ENFORCEMENT:
Enforcement is the action taken by the Water Protection Program (WPP) to bring an entity into compliance with the Missouri Clean Water Law, its implementing regulations, and/or any terms and conditions of an operating permit. The primary purpose of the enforcement activity in the WPP is to resolve violations and return the entity to compliance.

☐ - The facility is currently under enforcement action.
☒ - The facility is not currently under Water Protection Program enforcement action.

DISCHARGE MONITORING REPORTS:
On July 30, 2013, EPA proposed the Clean Water Act National Pollutant Discharge Elimination System (NPDES) Electronic Reporting Rule, which requires electronic reporting of NPDES information rather than the currently-required paper-based reports from permitted facilities. To comply with the upcoming federal rule, the Department is asking all permittees to begin submitting discharge monitoring data online. For permittees already using the Department's eDMR data reporting system, those permittees will be required to exclusively use the eDMR data reporting system.

☐ - The permittee/facility is currently using the eDMR data reporting system.

☒ - The permittee/facility is not currently using the eDMR data reporting system. To sign up for the eDMR system, visit the Department's eDMR page at http://dnr.mo.gov/env/wpp/edmr.htm.

PRETREATMENT PROGRAM:
The reduction of the amount of pollutants, the elimination of pollutants, or the alteration of the nature of pollutant properties in wastewater prior to or in lieu of discharging or otherwise introducing such pollutants into a Publicly Owned Treatment Works [40 CFR Part 403.3(q)].

Pretreatment programs are required at any POTW (or combination of POTW operated by the same authority) and/or municipality with a total design flow greater than 5.0 MGD and receiving industrial wastes that interfere with or pass through the treatment works or are otherwise subject to the pretreatment standards. Pretreatment programs can also be required at POTWs/municipals with a design flow less than 5.0 MGD if needed to prevent interference with operations or pass through.

Several special conditions pertaining to the permittee's pretreatment program may be included in the permit, and are as follows:
- Implementation and enforcement of the program,
- Annual pretreatment report submittal,
- Submittal of list of industrial users,
- Technical evaluation of need to establish local limitations, and
- Submittal of the results of the evaluation

☐ - This permittee has an approved pretreatment program in accordance with the requirements of [40 CFR Part 403] and [10 CSR 20-6.100] and is expected to implement and enforce its approved program.

☒ - The permittee, at this time, is not required to have a Pretreatment Program or does not have an approved pretreatment program.

REASONABLE POTENTIAL ANALYSIS (RPA):
Federal regulation [40 CFR Part 122.44(d)(1)(i)] requires effluent limitations for all pollutants that are or may be discharged at a level that will cause or have the reasonable potential to cause or contribute to an in-stream excursion above narrative or numeric water quality standard.

In accordance with [40 CFR Part 122.44(d)(1)(iii)] if the permit writer determines that any given pollutant has the reasonable potential to cause, or contribute to an in-stream excursion above the WQS, the permit must contain effluent limits for that pollutant.

☒ - A RPA was conducted on appropriate parameters. Please see **APPENDIX – RPA RESULTS.**

☐ - A RPA was not conducted for this facility.

REMOVAL EFFICIENCY:
Removal efficiency is a method by which the Federal Regulations define Secondary Treatment and Equivalent to Secondary Treatment, which applies to Biochemical Oxygen Demand 5-day (BOD_5) and Total Suspended Solids (TSS) for Publicly Owned Treatment Works (POTWs)/municipals.

☒ - Secondary Treatment is 85% removal [40 CFR Part 133.102(a)(3) & (b)(3)].

☐ - Equivalent to Secondary Treatment is 65% removal [40 CFR Part 133.105(a)(3) & (b)(3)].

SANITARY SEWER OVERFLOWS (SSO) AND INFLOW AND INFILTRATION (I&I):
Sanitary Sewer Overflows (SSOs) are defined as untreated sewage releases and are considered bypassing under state regulation [10 CSR 20-2.010(11)] and should not be confused with the federal definition of bypass. SSOs result from a variety of causes including blockages, line breaks, and sewer defects that can either allow wastewater to backup within the collection system during dry weather conditions or allow excess stormwater and groundwater to enter and overload the collection system during wet weather conditions. SSOs can also result from lapses in sewer system operation and maintenance, inadequate sewer design and construction, power failures, and vandalism. SSOs include overflows out of manholes, cleanouts, broken pipes, and other into waters of the state and onto city streets, sidewalks, and other terrestrial locations.

Inflow and Infiltration (I&I) is defined as unwanted intrusion of stormwater or groundwater into a collection system. This can occur from points of direct connection such as sump pumps, roof drain downspouts, foundation drains, and storm drain cross-connections or through cracks, holes, joint failures, faulty line connections, damaged manholes, and other openings in the collection system itself. I&I results from a variety of causes including line breaks, improperly sealed connections, cracks caused by soil erosion/settling, penetration of vegetative roots, and other sewer defects. In addition, excess stormwater and groundwater entering the collection system from line breaks and sewer defects have the potential to negatively impact the treatment facility.

Missouri RSMo §644.026.1.(13) mandates that the Department issue permits for discharges of water contaminants into the waters of this state, and also for the operation of sewer systems. Such permit conditions shall ensure compliance with all requirements as established by sections 644.006 to 644.141. Standard Conditions Part I, referenced in the permit, contains provisions requiring proper

operation and maintenance of all facilities and systems of treatment and control. Missouri RSMo §644.026.1.(15) instructs the Department to require proper maintenance and operation of treatment facilities and sewer systems and proper disposal of residual waste from all such facilities. To ensure that public health and the environment are protected, any noncompliance which may endanger public health or the environment must be reported to the Department within 24 hours of the time the permittee becomes aware of the noncompliance. Standard Conditions Part I, referenced in the permit, contains the reporting requirements for the permittee when bypasses and upsets occur. The permit also contains requirements for permittees to develop and implement a program for maintenance and repair of the collection system. The permit requires that the permittee submit an annual report to the Department for the previous calendar year that contains a list of all SSOs and building backups (locations, features of collection system where the SSO/building backup occurred, volumes, durations, receiving stream, causes, mitigation efforts, and actions to prevent reoccurrences), a summary of efforts taken by the permittee to locate and eliminate sources of excess I & I, a summary of general maintenance and repairs to the collection system, and a summary of any planned maintenance and repairs to the collection system for the upcoming calendar year.

☒ - At this time, the Department recommends the US EPA's Guide for Evaluating Capacity, Management, Operation and Maintenance (CMOM) Programs At Sanitary Sewer Collection Systems (Document # EPA 305-B-05-002) or the Departments' CMOM Model located at http://dnr.mo.gov/env/wpp/permits/docs/cmom-template.doc. For additional information regarding the Departments' CMOM Model, see the CMOM Plan Model Guidance document at http://dnr.mo.gov/pubs/pub2574.htm. The CMOM identifies some of the criteria used to evaluate a collection system's management, operation, and maintenance and was intended for use by the EPA, state, regulated community, and/or third party entities. The CMOM is applicable to small, medium, and large systems; both public and privately owned; and both regional and satellite collection systems. The CMOM does not substitute for the Clean Water Act, the Missouri Clean Water Law, and both federal and state regulations, as it is not a regulation.

☐ - This facility is not required to develop or implement a program for maintenance and repair of the collection system; however, it is a violation of Missouri State Environmental Laws and Regulations to allow untreated wastewater to discharge to waters of the state.

SCHEDULE OF COMPLIANCE (SOC):

Per 644.051.4 RSMo, a permit may be issued with a Schedule of Compliance (SOC) to provide time for a facility to come into compliance with new state or federal effluent regulations, water quality standards, or other requirements. Such a schedule is not allowed if the facility is already in compliance with the new requirement, or if prohibited by other statute or regulation. A SOC includes an enforceable sequence of interim requirements (actions, operations, or milestone events) leading to compliance with the Missouri Clean Water Law, its implementing regulations, and/or the terms and conditions of an operating permit. *See also* Section 502(17) of the Clean Water Act, and 40 CFR §122.2. For new effluent limitations, the permit includes interim monitoring for the specific parameter to demonstrate the facility is not already in compliance with the new requirement. Per 40 CFR § 122.47(a)(1) and 10 CSR 20-7.031(11), compliance must occur as soon as possible. If the permit provides a schedule for meeting new water quality based effluent limits, a SOC must include an enforceable, final effluent limitation in the permit even if the SOC extends beyond the life of the permit.

A SOC is not allowed:

- For effluent limitations based on technology-based standards established in accordance with federal requirements, if the deadline for compliance established in federal regulations has passed. 40 CFR § 125.3.
- For a newly constructed facility in most cases. Newly constructed facilities must meet applicable effluent limitations when discharge begins, because the facility has installed the appropriate control technology as specified in a permit or antidegradation review. A SOC is allowed for a new water quality based effluent limit that was not included in a previously public noticed permit or antidegradation review, which may occur if a regulation changes during construction.
- To develop a TMDL, UAA, or other study associated with development of a site specific criterion. A facility is not prohibited from conducting these activities, but a SOC may not be granted for conducting these activities.

In order to provide guidance to Permit Writers in developing SOCs, and attain a greater level of consistency, on October 25, 2012 the Department issued a policy on development of SOCs. This policy provides guidance to Permit Writers on the standard time frames for schedules for common activities, and guidance on factors that may modify the length of the schedule such as a cost analysis.

☐ - The time given for effluent limitations of this permit listed under Interim Effluent Limitation and Final Effluent Limitations were established in accordance with [10 CSR 20-7.031(11)].

☒ - This permit does not contain a SOC.

STORMWATER POLLUTION PREVENTION PLAN (SWPPP):

In accordance with 40 CFR 122.44(k) *Best Management Practices (BMPs)* to control or abate the discharge of pollutants when: (1) Authorized under section 304(e) of the Clean Water Act (CWA) for the control of toxic pollutants and hazardous substances from ancillary industrial activities: (2) Authorized under section 402(p) of the CWA for the control of stormwater discharges; (3) Numeric effluent limitations are infeasible; or (4) the practices are reasonably necessary to achieve effluent limitations and standards or to carry out the purposes and intent of the CWA.

In accordance with the EPA's *Developing Your Stormwater Pollution Prevention Plan, A Guide for Industrial Operators*, (Document number EPA 833-B-09-002) [published by the United States Environmental Protection Agency (USEPA) in February 2009], BMPs are measures or practices used to reduce the amount of pollution entering (regarding this operating permit) waters of the state. BMPs may take the form of a process, activity, or physical structure.

Additionally in accordance with the Stormwater Management, a SWPPP is a series of steps and activities to (1) identify sources of pollution or contamination, and (2) select and carry out actions which prevent or control the pollution of stormwater discharges.

☐ - 10 CSR 20-6.200 and 40 CFR 122.26 includes treatment works treating domestic sewage or any other sewage sludge or wastewater treatment device or system, used in the storage treatment, recycling, and reclamation of municipal or domestic sewage, including land dedicated to the disposal of sewage sludge that is located within the confines of the facility, with a design flow of 1.0 mgd or more, or are required to have an approved pretreatment program under 40 CFR part 403, as an industrial activity in which permit coverage is required.

In lieu of requiring sampling in the site-specific permit, the facility is required to develop and implement a Stormwater Pollution Prevention Plan. A facility can apply for conditional exclusion for "no exposure" of industrial activities and materials to stormwater by submitting to the Department a completed NPDES Form 3510-11 – No Exposure Certification for Exclusion from NPDES Stormwater Permitting. That document and additional information may be found at http://water.epa.gov/polwaste/npdes/stormwater/Conditional-No-Exposure-Exclusion.cfm. Upon approval on the "No Exposure", the permit can be modified to remove the SWPPP requirements. If the facility chooses to retain the conditional exclusion for "no exposure", the facility is required to renew the "No Exposure" exemption during the permit renewal period by submitting NPDES Form 3510-11 with Form B2.

☒ - At this time, the permittee is not required to develop and implement a SWPPP.

VARIANCE:

As per the Missouri Clean Water Law § 644.061.4, variances shall be granted for such period of time and under such terms and conditions as shall be specified by the commission in its order. The variance may be extended by affirmative action of the commission. In no event shall the variance be granted for a period of time greater than is reasonably necessary for complying with the Missouri Clean Water Law §§644.006 to 644.141 or any standard, rule or regulation promulgated pursuant to Missouri Clean Water Law §§644.006 to 644.141.

☐ - This operating permit is drafted under premises of a petition for variance.

☒ - This operating permit is not drafted under premises of a petition for variance.

WASTELOAD ALLOCATIONS (WLA) FOR LIMITS:

As per [10 CSR 20-2.010(78)], the amount of pollutant each discharger is allowed by the Department to release into a given stream after the Department has determined total amount of pollutant that may be discharged into that stream without endangering its water quality.

☒ - Wasteload allocations were calculated where applicable using water quality criteria or water quality model results and the dilution equation below:

$$Ce = \frac{(Qe + Qs)C - (Cs \times Qs)}{(Qe)}$$ (EPA/505/2-90-001, Section 4.5.5)

Where C = downstream concentration; Ce = effluent concentration; Cs = upstream concentration; Qe = effluent flow; Qs = upstream flow

Chronic wasteload allocations were determined using applicable chronic water quality criteria (CCC: criteria continuous concentration) and stream volume of flow at the edge of the mixing zone (MZ). Acute wasteload allocations were

determined using applicable water quality criteria (CMC: criteria maximum concentration) and stream volume of flow at the edge of the zone of initial dilution (ZID).

Water quality based maximum daily and average monthly effluent limitations were calculated using methods and procedures outlined in USEPA's "Technical Support Document For Water Quality-based Toxics Control" (EPA/505/2-90-001).

Number of Samples "n":
Additionally, in accordance with the TSD for water quality-based permitting, effluent quality is determined by the underlying distribution of daily values, which is determined by the Long Term Average (LTA) associated with a particular Wasteload Allocation (WLA) and by the Coefficient of Variation (CV) of the effluent concentrations. Increasing or decreasing the monitoring frequency does not affect this underlying distribution or treatment performance, which should be, at a minimum, be targeted to comply with the values dictated by the WLA. Therefore, it is recommended that the actual planned frequency of monitoring normally be used to determine the value of "n" for calculating the AML. However, in situations where monitoring frequency is once per month or less, a higher value for "n" must be assumed for AML derivation purposes. Thus, the statistical procedure being employed using an assumed number of samples is "n = 4" at a minimum. For Total Ammonia as Nitrogen, "n = 30" is used

☐ - Wasteload allocations were not calculated.

WLA MODELING:
There are two general types of effluent limitations, technology-based effluent limits (TBELs) and water quality based effluent limits (WQBELs). If TBELs do not provide adequate protection for the receiving waters, then WQBEL must be used.

☐ - A WLA study including model was submitted to the Department.

☒ - A WLA study was either not submitted or determined not applicable by Department staff.

WATER QUALITY STANDARDS:
Per [10 CSR 20-7.031(4)], General Criteria shall be applicable to all waters of the state at all times including mixing zones. Additionally, [40 CFR 122.44(d)(1)] directs the Department to establish in each NPDES permit to include conditions to achieve water quality established under Section 303 of the Clean Water Act, including State narrative criteria for water quality.

WHOLE EFFLUENT TOXICITY (WET) TEST:

☒ - The permittee is required to conduct WET test for this facility.

A WET test is a quantifiable method of determining if a discharge from a facility may be causing toxicity to aquatic life by itself, in combination with or through synergistic responses when mixed with receiving stream water.

Under the federal Clean Water Act (CWA) §101(a)(3), requiring WET testing is reasonably appropriate for site-specific Missouri State Operating Permits for discharges to waters of the state issued under the National Pollutant Discharge Elimination System (NPDES). WET testing is also required by 40 CFR 122.44(d)(1). WET testing ensures that the provisions in the 10 CSR 20-6.010(8)(A)7. and the Water Quality Standards 10 CSR 20-7.031(4)(D),(F),(G),(I)2.A & B are being met. Under [10 CSR 20-6.010(8)(A)4], the Department may require other terms and conditions that it deems necessary to assure compliance with the Clean Water Act and related regulations of the Missouri Clean Water Commission. In addition the following MCWL apply: §§§644.051.3 requires the Department to set permit conditions that comply with the MCWL and CWA; 644.051.4 specifically references toxicity as an item we must consider in writing permits (along with water quality-based effluent limits, pretreatment, etc…); and 644.051.5 is the basic authority to require testing conditions. WET test will be required by facilities meeting the following criteria:

- ☐ Facility is a designated Major.
- ☐ Facility continuously or routinely exceeds its design flow.
- ☐ Facility that exceeds its design population equivalent (PE) for BOD_5 whether or not its design flow is being exceeded.
- ☐ Facility (whether primarily domestic or industrial) that alters its production process throughout the year.
- ☐ Facility handles large quantities of toxic substances, or substances that are toxic in large amounts.
- ☐ Facility has Water Quality-based Effluent Limitations for toxic substances (other than NH_3)
- ☒ Facility is a municipality with a Design Flow ≥ 22,500 gpd.
- ☐ Other – please justify.

☐ - At this time, the permittee is not required to conduct WET test for this facility.

40 CFR 122.41(M) - BYPASSES:
The federal Clean Water Act (CWA), Section 402 prohibits wastewater dischargers from "bypassing" untreated or partially treated sewage (wastewater) beyond the headworks. A bypass is defined as an intentional diversion of waste streams from any portion of a treatment facility, [40 CFR 122.41(m)(1)(i)]. Additionally, Missouri regulation 10 CSR 20-7.015(9)(G) states a bypass means the intentional diversion of waste streams from any portion of a treatment facility, except in the case of blending, to waters of the state. Only under exceptional and specified limitations do the federal regulations allow for a facility to bypass some or all of the flow from its treatment process. Bypasses are prohibited by the CWA unless a permittee can meet all of the criteria listed in 40 CFR 122.41(m)(4)(i)(A), (B), & (C). Any bypasses from this facility are subject to the reporting required in 40 CFR 122.41(l)(6) and per Missouri's Standard Conditions I, Section B, part 2.b. Additionally, Anticipated Bypasses include bypasses from peak flow basins or similar devices designed for peak wet weather flows.

☐ - Bypasses occur or have occurred at this facility.

☒ - This facility does not anticipate bypassing.

303(d) LIST & TOTAL MAXIMUM DAILY LOAD (TMDL):
Section 303(d) of the federal Clean Water Act requires that each state identify waters that are not meeting water quality standards and for which adequate water pollution controls have not been required. Water quality standards protect such beneficial uses of water as whole body contact (such as swimming), maintaining fish and other aquatic life, and providing drinking water for people, livestock and wildlife. The 303(d) list helps state and federal agencies keep track of waters that are impaired but not addressed by normal water pollution control programs.

A TMDL is a calculation of the maximum amount of a given pollutant that a body of water can absorb before its water quality is affected. If a water body is determined to be impaired as listed on the 303(d) list, then a watershed management plan will be developed that shall include the TMDL calculation

☐ - This facility discharges to a 303(d) listed stream.

☐ - This facility does not discharge to a 303(d) listed stream.

☒ - This facility discharges to a stream with an EPA approved TMDL.

- The Mississippi River was listed on the 2002 Missouri 303(d) List for Chlordane.

  ☒ - This facility is not considered to be a source of the above listed pollutant(s) or considered to contribute to the impairment of Chlordane

Part VI –2013 Water Quality Criteria for Ammonia

Upcoming changes to the Water Quality Standard for ammonia may require significant upgrades to wastewater treatment facilities.

On August 22, 2013, the U.S. Environmental Protection Agency (EPA) finalized new water quality criteria for ammonia, based on toxicity studies of mussels and gill breathing snails. Missouri's current ammonia criteria are based on toxicity testing of several species, but did not include data from mussels or gill breathing snails. Missouri is home to 69 of North America's mussel species, which are spread across the state. According to the Missouri Department of Conservation nearly two-thirds of the mussel species in Missouri are considered to be "of conservation concern". Nine species are listed as federally endangered, with an additional species currently proposed as endangered and another species proposed as threatened.

The adult forms of mussels that are seen in rivers, lakes, and streams are sensitive to pollutants because they are sedentary filter feeders. They vacuum up many pollutants with the food they bring in and cannot escape to new habitats, so they can accumulate toxins in their bodies and die. But very young mussels, called glochidia, are exceptionally sensitive to ammonia in water. As a result of a citizen suit, the EPA was compelled to conduct toxicity testing and develop ammonia water quality criteria that would be protective if young mussels may be present in a waterbody. These new criteria will apply to any discharge with ammonia levels that may pose a reasonable potential to violate the standards. Nearly all discharging domestic wastewater treatment facilities (cities, subdivisions, mobile home parks, etc.), as well as certain industrial and stormwater dischargers with ammonia in their effluent, will be affected by this change in the regulations.

When new water quality criteria are established by the EPA, states must adopt them into their regulations in order to keep their authorization to issue permits under the National Pollutant Discharge Elimination System (NPDES). States are required to review their water quality standards every three years, and if new criteria have been developed they must be adopted. States may be more protective than the Federal requirements, but not less protective. Missouri does not have the resources to conduct the studies

necessary for developing new water quality standards, and therefore our standards mirror those developed by the EPA; however, we will utilize any available flexibility based on actual species of mussels that are native to Missouri and their sensitivity to ammonia.

Many treatment facilities in Missouri are currently scheduled to be upgraded to comply with the current water quality standards. But these new ammonia standards may require a different treatment technology than the one being considered by the permittee. It is important that permittees discuss any new and upcoming requirements with their consulting engineers to ensure that their treatment systems are capable of complying with the new requirements. The Department encourages permittees to construct treatment technologies that can attain effluent quality that supports the EPA ammonia criteria.

Ammonia toxicity varies by temperature and by pH of the water. Assuming a stable pH value, but taking into account winter and summer temperatures, Missouri includes two seasons of ammonia effluent limitations. The current permits have monitoring only requirements for Ammonia.

Under the new EPA criteria, where mussels of the family Unionidae are present or expected to be present, the facility would again have monitoring only requirements for Ammonia as the calculations show no reasonable potential to violate Water Quality Standards for a facility in a location such as this that discharges to a receiving stream with the mixing consideration listed in Part IV of the Fact Sheet.

The above determination is based in part on the actual performance of the plant at the time of the drafting of this permit and should not be construed as future effluent limitations. Future effluent limits, based on the EPA's 2013 water quality criteria for ammonia, will depend in part on the actual performance of the facility at the time the permit is renewed.

Operating permits for facilities in Missouri must be written based on current statutes and regulations. Therefore permits will be written with the existing effluent limitations until the new standards are adopted. To aid permittees in decision making, an advisory will be added to permit Fact Sheets notifying permittees of the expected effluent limitations for ammonia. When setting schedules of compliance for ammonia effluent limitations, consideration will be given to facilities that have recently constructed upgraded facilities to meet the current ammonia limitations.

For more information on this topic feel free to contact the Missouri Department of Natural Resources, Water Protection Program, Water Pollution Control Branch, Operating Permits Section at (573) 751-1300.

Part VII – Effluent Limits Determination

APPLICABLE DESIGNATIONS OF WATERS OF THE STATE:
As per Missouri's Effluent Regulations [10 CSR 20-7.015], the waters of the state are divided into the below listed seven (7) categories. Each category lists effluent limitations for specific parameters, which are presented in each outfall's Effluent Limitation Table and further discussed in the Derivation & Discussion of Limits section.

- ☒ Missouri or Mississippi River [10 CSR 20-7.015(2)]
- ☐ Lake or Reservoir [10 CSR 20-7.015(3)]
- ☐ Losing [10 CSR 20-7.015(4)]
- ☐ Metropolitan No-Discharge [10 CSR 20-7.015(5)]
- ☐ Subsurface Water [10 CSR 20-7.015(7)]
- ☐ All Other Waters [10 CSR 20-7.015(8)]

OUTFALL #001 – MAIN FACILITY OUTFALL

Effluent limitations derived and established in the below Effluent Limitations Table are based on current operations of the facility. Future permit action due to facility modification may contain new operating permit terms and conditions that supersede the terms and conditions, including effluent limitations, of this operating permit.

EFFLUENT LIMITATIONS TABLE:

PARAMETER	Unit	Basis for Limits	Daily Maximum	Weekly Average	Monthly Average	Modified	Previous Permit Limit	Sampling Frequency	Reporting Frequency	Sample Type ****
Flow	MGD	1	*		*	No	*/*	1/week day	monthly	M
BOD_5	mg/L	1		45	30	No	45/30	1/month	monthly	C
TSS	mg/L	1		45	30	No	45/30	1/month	monthly	C
Ammonia as N	mg/L	2, 3	*		*	No	*/*	1/month	monthly	G
Escherichia coli **	#/100mL	1, 3		630	126	Yes	Fecal – 1000/ 400	1/week	monthly	G
Oil & Grease	mg/L	1, 3	15		10	No	15/10	1/quarter	quarterly	G
Total Nitrogen	mg/L	1	*		*	Yes	***	1/quarter	quarterly	G
Total Phosphorus	mg/L	1	*		*	Yes	***	1/quarter	quarterly	G
Acute Whole Effluent Toxicity	TUa	1, 9	*			Yes	Pass/ Fail	1/permit cycle	1/permit cycle	C
PARAMETER	Unit	Basis for Limits	Minimum		Maximum	Modified	Previous Permit Limit	Sampling Frequency	Reporting Frequency	Sample Type
pH	SU	1	6.0		9.0			1/month	monthly	G

* - Monitoring requirement only.
** - #/100mL; the Monthly Average for *E. coli* is a geometric mean.
*** - Parameter not previously established in previous state operating permit.

**** - C = 24-hour composite
G = Grab
M = Total Measured / Measured

Basis for Limitations Codes:

1. State or Federal Regulation/Law
2. Water Quality Standard (includes RPA)
3. Water Quality Based Effluent Limits
4. Antidegradation Review
5. Antidegradation Policy
6. Water Quality Model
7. Best Professional Judgment
8. TMDL or Permit in lieu of TMDL
9. WET Test Policy

OUTFALL #001 – DERIVATION AND DISCUSSION OF LIMITS:

- **Flow**. In accordance with [40 CFR Part 122.44(i)(1)(ii)] the volume of effluent discharged from each outfall is needed to assure compliance with permitted effluent limitations. If the permittee is unable to obtain effluent flow, then it is the responsibility of the permittee to inform the Department, which may require the submittal of an operating permit modification.

- **Biochemical Oxygen Demand (BOD_5).**

  ☒ - Effluent limitations have been retained from previous state operating permit, please see the **APPLICABLE DESIGNATION OF WATERS OF THE STATE** sub-section of the **Effluent Limits Determination.**

- **Total Suspended Solids (TSS).**

  ☒ - Effluent limitations have been retained from previous state operating permit, please see the **APPLICABLE DESIGNATION OF WATERS OF THE STATE** sub-section of the **Effluent Limits Determination.**

- **Total Ammonia Nitrogen**. Monitoring only requirement as there was no reasonable potential to violate Water Quality Standards observed. This data will be reviewed during the next permit renewal.

- ***Escherichia coli (E. coli)***. Monthly average of 126 per 100 mL as a geometric mean and Weekly Average of 630 per 100 mL as a geometric mean during the recreational season (April 1 – October 31), to protect Whole Body Contact Recreation (A) designated use of the receiving stream, as per 10 CSR 20-7.031(5)(C). An effluent limit for both monthly average and weekly average is required by 40 CFR 122.45(d). The Geometric Mean is calculated by multiplying all of the data points and then taking the nth root of this product, where n = # of samples collected. For example: Five E. coli samples were collected with results of 1, 4, 6, 10, and 5 (#/100mL). Geometric Mean = 5th root of (1)(4)(6)(10)(5) = 5th root of 1,200 = 4.1 #/100mL.

- **Oil & Grease**. Conventional pollutant, effluent limitation for protection of aquatic life; 10 mg/L monthly average, 15 mg/L daily maximum.

- **Total Phosphorus and Total Nitrogen**. Monitoring required for facilities greater than 100,000 gpd design flow per 10 CSR 20-7.015(9)(D)7. Total Nitrogen shall be determined by testing for Total Kjeldahl Nitrogen (TKN) and Nitrate + Nitrite and reporting the sum of the results (reported as N). Nitrate + Nitrite can be analyzed together or separately.

- **pH**. – 6.0-9.0 SU. Technology based limits [10 CSR 20-7.015] are protective of the water quality standard [10 CSR 20-7.031(5)(E)], due to the buffering capacity of the mixing zone.

Whole Effluent Toxicity

Acute Whole Effluent Toxicity. Monitoring requirement only. Monitoring is required to determine if reasonable potential exists for this facility's discharge to exceed water quality standards.

Classified P with other than default Mixing Considerations, the AEC% is determined as follows:.

Acute AEC% = $((0.465 + 4.65) / 0.465)^{-1}] \times 100 = 9.1\%$

- **Parameters Removed:**. Temperature was removed as it did not show a reasonable potential to violate Water Quality Standards.

Sampling Frequency Justification:

Sampling and Reporting Frequency was retained from previous permit, except weekly sampling is required for *E. coli*, per 10 CSR 20-7.015(9)(D)6.A. Oil & Grease was reduced to quarterly.

WET Test Sampling Frequency Justification. WET Testing schedules and intervals are established in accordance with the Department's Permit Manual; Section 5.2 *Effluent Limits / WET Testing for Compliance Bio-monitoring.* It is recommended that WET testing be conducted during the period of lowest stream flow.

Acute Whole Effluent Toxicity

☒ -No less than **ONCE/PERMIT CYCLE:**
☒ -Municipality with a design flow ≥ 22,500 gpd, but less than 1.0 MGD.
☐ - Other, please justify.

Sampling Type Justification

As per 10 CSR 20-7.015, BOD_5, TSS, and WET test samples collected for mechanical plants shall be a 24 hour composite sample. Grab samples, however, must be collected for pH, Ammonia as N, *E. coli*, Oil & Grease, and Total Phosphorus. This is due to the holding time restriction for *E. coli*, the volatility of Ammonia, and the fact that pH cannot be preserved and must be sampled in the field. As Ammonia, Oil & Grease, and Total Phosphorus samples must be immediately preserved, these samples are to be collected as a grab.

PERMITTED FEATURE #SM1 – INSTREAM MONITORING (UPSTREAM)

The monitoring requirements established in the below Monitoring Requirements Table are based on current operations of the facility. Future permit action due to facility modification may contain new operating permit terms and conditions that supersede the terms and conditions, including the monitoring requirements listed in this table..

MONITORING REQUIREMENTS TABLE:

PARAMETER	Unit	Basis for Limits	Daily Maximum	Weekly Average	Monthly Average	Modified	Previous Permit Limit	Sampling Frequency	Reporting Frequency	Sample Type ****
Total Nitrogen	mg/L	7	*		*	Yes	***	quarterly	quarterly	G
Total Phosphorus	mg/L	7	*		*	Yes	***	quarterly	quarterly	G

* - Monitoring requirement only.
*** - Parameter not previously established in previous state operating permit.

**** - C = 24-hour composite
G = Grab
M = Total Measured / Measured

Basis for Limitations Codes:

1. State or Federal Regulation/Law
2. Water Quality Standard (includes RPA)
3. Water Quality Based Effluent Limits
4. Antidegradation Review
5. Antidegradation Policy
6. Water Quality Model
7. Best Professional Judgment
8. TMDL or Permit in lieu of TMDL
9. WET Test Policy

PERMITTED FEATURE #SM1 – DERIVATION AND DISCUSSION OF MONITORING REQUIREMENTS:

- **Total Phosphorus and Total Nitrogen**. Facilities with a design flow greater than 100,000 gallons per day are required to sample their effluent quarterly for Total Phosphorus and Total Nitrogen per 10 CSR 20-7.015(9)(D)7. Upstream monitoring for these parameters is necessary to determine background stream concentrations in order to complete calculations that determine instream nutrient loading.

Sampling Frequency Justification:
The sampling and reporting frequency for Total Phosphorus and Total Nitrogen has been established to match the required sampling frequency of these parameters in the effluent.

Sampling Type Justification
As Total Phosphorus and Total Nitrogen samples must be immediately preserved; these samples are to be collected as a grab.

Part VIII – Cost Analysis for Compliance

Pursuant to Section 644.145, RSMo, when issuing permits under this chapter that incorporate a new requirement for discharges from publicly owned combined or separate sanitary or storm sewer systems or publicly owned treatment works, or when enforcing provisions of this chapter or the Federal Water Pollution Control Act, 33 U.S.C. 1251 et seq., pertaining to any portion of a publicly owned combined or separate sanitary or storm sewer system or [publicly owned] treatment works, the Department of Natural Resources shall make a "finding of affordability" on the costs to be incurred and the impact of any rate changes on ratepayers upon which to base such permits and decisions, to the extent allowable under this chapter and the Federal Water Pollution Control Act. This process is completed through a cost analysis for compliance. Permits that do not include new requirements may be deemed affordable.

☒ - The Department is required to determine "findings of affordability" because the permit applies to a **combined or separate sanitary sewer system for a publically-owned treatment works.**

Cost Analysis for Compliance - The Department has made a reasonable search for empirical data indicating the permit is affordable. The search consisted of a review of Department records that might contain economic data on the community, a review of information provided by the applicant as part of the application, and public comments received in response to public notices of this draft permit. If the empirical cost data was used by the permit writer, this data may consist of median household income, any other ongoing projects that the Department has knowledge, and other demographic financial information that the community provided as contemplated by Section 644. 145.3. See **Appendix – Cost Analysis for Compliance**

Part IX – Administrative Requirements

On the basis of preliminary staff review and the application of applicable standards and regulations, the Department, as administrative agent for the Missouri Clean Water Commission, proposes to issue a permit(s) subject to certain effluent limitations, schedules, and special conditions contained herein and within the operating permit. The proposed determinations are tentative pending public comment.

PERMIT SYNCHRONIZATION:
The Department of Natural Resources is currently undergoing a synchronization process for operating permits. Permits are normally issued on a five-year term, but to achieve synchronization many permits will need to be issued for less than the full five years allowed by regulation. The intent is that all permits within a watershed will move through the Watershed Based Management (WBM) cycle together will all expire in the same fiscal year. This will allow further streamlining by placing multiple permits within a smaller geographic area on public notice simultaneously, thereby reducing repeated administrative efforts. This will also allow the Department to explore a watershed based permitting effort at some point in the future. Renewal applications must continue to be submitted within 180 days of expiration, however, in instances where effluent data from the previous renewal is less than 4 years old, that data may be re-submitted to meet the requirements of the renewal application. If the permit provides a schedule of compliance for meeting new water quality based effluent limits beyond the expiration date of the permit, the time remaining in the schedule of compliance will be allotted in the renewed permit. This permit will expire in the 1st Quarter of calendar year 2018.

PUBLIC NOTICE:
The Department shall give public notice that a draft permit has been prepared and its issuance is pending. Additionally, public notice will be issued if a public hearing is to be held because of a significant degree of interest in and water quality concerns related to a draft permit. No public notice is required when a request for a permit modification or termination is denied; however, the requester and permittee must be notified of the denial in writing. The Department must issue public notice of a pending operating permit or of a new or reissued statewide general permit. The public comment period is the length of time not less than 30 days following the date of the public notice which interested persons may submit written comments about the proposed permit. For persons wanting to submit comments regarding this proposed operating permit, then please refer to the Public Notice page located at the front of this draft operating permit. The Public Notice page gives direction on how and where to submit appropriate comments.

☐ - The Public Notice period for this operating permit was from September 25, 2015 to October 26, 2015. No responses received.

DATE OF FACT SHEET: AUGUST 17, 2015

COMPLETED BY:

BRANT FARRIS, ENVIRONMENTAL SPECIALIST III
MISSOURI DEPARTMENT OF NATURAL RESOURCES
WATER PROTECTION PROGRAM
OPERATING PERMITS SECTION - DOMESTIC WASTEWATER UNIT
(660) 385-8061
brant.farris@dnr.mo.gov

Appendices

APPENDIX - CLASSIFICATION WORKSHEET:

ITEM	POINTS POSSIBLE	POINTS ASSIGNED
Maximum Population Equivalent (P.E.) served (Max 10 pts.)	1 pt./10,000 PE or major fraction thereof.	
Maximum: 10 pt Design Flow (avg. day) or peak month; use greater (Max 10 pts.)	1 pt. / MGD or major fraction thereof.	
EFFLUENT DISCHARGE RECEIVING WATER SENSITIVITY:		
Missouri or Mississippi River	0	0
All other stream discharges except to losing streams and stream reaches supporting whole body contact	1	
Discharge to lake or reservoir outside of designated whole body contact recreational area	2	
Discharge to losing stream, or stream, lake or reservoir area supporting whole body contact recreation	3	3
PRELIMINARY TREATMENT - Headworks		
Screening and/or comminution	3	3
Grit removal	3	3
Plant pumping of main flow (lift station at the headworks)	3	3
PRIMARY TREATMENT		
Primary clarifiers	5	
Combined sedimentation/digestion	5	
Chemical addition (except chlorine, enzymes)	4	
REQUIRED LABORATORY CONTROL – performed by plant personnel (highest level only)		
Push – button or visual methods for simple test such as pH, Settleable solids	3	
Additional procedures such as DO, COD, BOD, titrations, solids, volatile content	5	
More advanced determinations such as BOD seeding procedures, fecal coliform, nutrients, total oils, phenols, etc.	7	7
Highly sophisticated instrumentation, such as atomic absorption and gas chromatograph	10	
ALTERNATIVE FATE OF EFFLUENT		
Direct reuse or recycle of effluent	6	
Land Disposal – low rate	3	
High rate	5	
Overland flow	4	
Total from page **ONE (1)**	----	19

APPENDIX - CLASSIFICATION WORKSHEET (CONTINUED):

ITEM	POINTS POSSIBLE	POINTS ASSIGNED
VARIATION IN RAW WASTE (highest level only) (DMR exceedances and Design Flow exceedances)		
Variation do not exceed those normally or typically expected	0	
Recurring deviations or excessive variations of 100 to 200 % in strength and/or flow	2	
Recurring deviations or excessive variations of more than 200 % in strength and/or flow	4	4
Raw wastes subject to toxic waste discharge	6	6
SECONDARY TREATMENT		
Trickling filter and other fixed film media with secondary clarifiers	10	
Activated sludge with secondary clarifiers (including extended aeration and oxidation ditches)	15	15
Stabilization ponds without aeration	5	
Aerated lagoon	8	
Advanced Waste Treatment Polishing Pond	2	
Chemical/physical – without secondary	15	
Chemical/physical – following secondary	10	
Biological or chemical/biological	12	12
Carbon regeneration	4	
DISINFECTION		
Chlorination or comparable	5	
Dechlorination	2	
On-site generation of disinfectant (except UV light)	5	
UV light	4	4
SOLIDS HANDLING - SLUDGE		
Solids Handling Thickening	5	5
Anaerobic digestion	10	
Aerobic digestion	6	6
Evaporative sludge drying	2	
Mechanical dewatering	8	8
Solids reduction (incineration, wet oxidation)	12	
Land application	6	6
Total from page **TWO (2)**	----	66
Total from page **ONE (1)**	---	19
Grand Total	---	85

☒ - A: 71 points and greater
☐ - B: 51 points – 70 points
☐ - C: 26 points – 50 points
☐ - D: 0 points – 25 points

APPENDIX – RPA RESULTS:

Parameter	CMC*	RWC Acute*	CCC*	RWC Chronic*	n**	Range max/min	CV***	MF	RP Yes/No
Total Ammonia as Nitrogen (Summer) mg/L	12.1	0.13	1.5	0.01	36.00	0.52/0.01	1.01	2.63	NO
Total Ammonia as Nitrogen (Winter) mg/L	12.1	0.76	3.1	0.01	38.00	2.01/0.01	1.98	4.11	NO

N/A – Not Applicable
* - Units are (µg/L) unless otherwise noted.
** - If the number of samples is 10 or greater, then the CV value must be used in the WQBEL for the applicable constituent. If the number of samples is < 10, then the default CV value must be used in the WQBEL for the applicable constituent.
*** - Coefficient of Variation (CV) is calculated by dividing the Standard Deviation of the sample set by the Mean of the same sample set.
RWC – Receiving Water Concentration. It is the concentration of a toxicant or the parameter toxicity in the receiving water after mixing (if applicable).
n – Is the number of samples.
MF – Multiplying Factor. 99% Confidence Level and 99% Probability Basis.
RP – Reasonable Potential. It is where an effluent is projected or calculated to cause an excursion above a water quality standard based on a number of factors including, as a minimum, the four factors listed in 40 CFR 122.44(d)(1)(ii).

Reasonable Potential Analysis is conducted as per (TSD, EPA/505/2-90-001, Section 3.3.2). A more detailed version including calculations of this RPA is available upon request.

APPENDIX – COST ANALYSIS FOR COMPLIANCE:

Missouri Department of Natural Resources
Water Protection Program
Cost Analysis for Compliance
(In accordance with RSMo 644.145)

LaGrange Wastewater Treatment Plant, Permit Renewal
City of LaGrange
Missouri State Operating Permit #MO-0041203

Section 644.145 RSMo requires the Department of Natural Resources (DNR) to make a "finding of affordability" when "issuing permits under" or "enforcing provisions of" state or federal clean water laws "pertaining to any portion of a combined or separate sanitary sewer system for publicly-owned treatment works."

The Department is required to issue a permit with final effluent limits in accordance with 644.051.1.(1) RSMo, 644.051.1.(2) RSMo, and the Clean Water Act. The practical result of many affordability findings will be to allow longer compliance schedules to mitigate adverse impact to distressed populations resulting from the costs of upgrading the wastewater treatment facility.

This cost analysis is based on data available to the Department as provided by the permittee and data obtained from readily available sources. For the most accurate analysis, it is essential that the permittee provides the Department with current information about the City's financial and socioeconomic situation.

Facility Description:

Residential Connections:	343
Commercial Connections:	27
Total Connections for this facility:	370

New Permit Requirements:

The permit requires compliance with new monitoring requirements for E. coli, Total Phosphorus, and Total Nitrogen. The parameters are required quarterly. Total Phosphorus and Total Nitrogen are required for both instream and effluent.

Anticipated Costs Associated with Complying with the New Requirements:

The total cost estimated for new e-coli weekly testing monitoring requirements is $1,160 annually. The total cost estimate for the new quarterly monitoring requirement for Total Phosphorus and Total Nitrogen (effluent and instream) is $776 a year. The decrease in monitoring for Oil & Grease saves the City an estimated $560 a year and the decrease in the Acute WET test saves the City approximately $267 a year. The total estimated cost for the new requirements is $1,109. This cost, if financed through user fees, might cost each household an extra $0.25[1] per month. A community sets their user rates based on several factors. The percentage of the current user rate that is available to cover new debt is unknown to the Department.

(1) A community's financial capability and ability to raise or secure necessary funding;

Due to the minimal cost associated with this new permit requirement, the Department anticipates the City of LaGrange has the means to raise $1,109 annually.

(2) Affordability of pollution control options for the individuals or households at or below the median household income level of the community;

The total cost estimated for the new monitoring requirements is $1,109 annually. This cost, if financed through user fees, might cost each household an extra $0.25 per month. This would make the additional cost per household as a percent of median household income (MHI) 0.007%[2] based on the City's MHI of $40,182. Due to the minimal cost associated with this new requirement, the Department anticipates an extremely low to no rate increase will be necessary that could impact individuals or households of the community.

(3) An evaluation of the overall costs and environmental benefits of the control technologies;

Nutrients are mineral compounds that are required for organisms to grow and thrive. Of the six (6) elemental macronutrients, Nitrogen and Phosphorus are generally not readily available and limit growth of organisms. If excess Nitrogen and Phosphorus are introduced into a waterbody, some species' populations will dramatically increase, while other populations will not be able to sustain life. This causes a shift in the ecosystem's food web. Competition and productivity are two factors in which nutrients can alter aquatic ecosystems and the designated uses of a waterbody. For example, designated uses, like drinking water source or recreational uses, become impaired when algal blooms take over a waterbody. These blooms can cause foul tastes and odors in the drinking water, and also cause unsightly appearance, and fish mortality in the waterbody. Some algae also produce toxins that may cause serious adverse health conditions such as liver damage, tumor promotion, paralysis, and kidney damage. Increased productivity of aquatic life may also clog treatment equipment, cause an increase in organic matter, bacteria, and fungi, and die-off and decomposition of algal blooms can reduce dissolved oxygen and suffocate fish and other aquatic life in the waterbody. The monitoring requirements for Nitrogen and Phosphorus have been added to the permit to provide data to the Department regarding the health of the receiving stream's aquatic life.

(4) Inclusion of ongoing costs of operating and maintaining the existing wastewater collection and treatment system, including payments on outstanding debts for wastewater collection and treatment systems when calculating projected rates:

The community did not provide the Department with information, nor could it be found through readily available data.

(5) An inclusion of ways to reduce economic impacts on distressed populations in the community, including but not limited to low and fixed income populations. This requirement includes but is not limited to:

(a) Allowing adequate time in implementation schedules to mitigate potential adverse impacts on distressed populations resulting from the costs of the improvements and taking into consideration local community economic considerations.
(b) Allowing for reasonable accommodations for regulated entities when inflexible standards and fines would impose a disproportionate financial hardship in light of the environmental benefits to be gained.

Socioeconomic Data[3-6]:

Potentially Distressed Populations – City of LaGrange	
Unemployment	5.4%
Adjusted Median Household Income (MHI)*	$40,182
Percent Change in MHI (1990-2012)	+94.1%
Percent Population Growth/Decline (1990-2012)	-20.3%
Change in Median Age in Years (1990-2012)	+6.8
Percent of Households in Poverty	19.6%
Percent of Households Relying on Food Stamps	21.2%

(6) An assessment of other community investments and operating costs relating to environmental improvements and public health protection;

The City reported that Water Department a new Wet Well was added to the drinking water plant on November 2013 at a cost of $414,000. A second Water Tower was constructed at the Ball Park at a cost of $515,000 and was completed in 2014. A new 8 inch main, a pump station, and 4 additional pressure reduction valves were installed from the current Water Tower to the New Water Tower. The total cost of this project will be around $450,000.

The City is currently spending $55,000 to 65,000 for materials every year in replacing old water mains on our 5 year plan. The City reported that the Waste Water Department has worked on replacing or relining the City's sewer mains and manholes. The 2014 budget year was $350,000.

(7) An assessment of factors set forth in the United States Environmental Protection Agency's guidance, including but not limited to the "Combined Sewer Overflow Guidance for Financial Capability Assessment and Schedule Development" that may ease the cost burdens of implementing wet weather control plans, including but not limited to small system considerations, the attainability of water quality standards, and the development of wet weather standards;

The new sampling requirements associated with this permit will not impose a financial burden on the community, nor will the new requirements require the City of LaGrange to seek funding from an outside source.

(8) An assessment of any other relevant local community economic condition.

The community did not report any other relevant local economic conditions.

Conclusion and Finding

As a result of new regulations, the Department is proposing modifications to the current operating permit that may require the permittee to increase monitoring. The Department identified the actions for which cost analysis for compliance is required under Section 644.145 RSMo.

The Department estimates the cost for the new monitoring requirements is $1,109 per year. Should these additional costs be financed through user fees, it may require user fees 0.007% of the community's MHI.

The Department considered the eight (8) criteria presented in subsection 644.145.3 when evaluating the cost associated with the relevant actions. Taking into consideration these criteria, this analysis examined whether the above referenced permit modifications affects the ability of an individual customer or household to pay a utility bill without undue hardship or unreasonable sacrifice in the essential lifestyle or spending patterns of the individual or household. As a result of reviewing the above criteria, the Department hereby finds that the action described above may result in a low burden with regard to the community's overall financial capability and a low financial impact for most individual customers/households; therefore, the new permit requirements are affordable.

References:

1. ((Estimated cost for sampling annually/Total connections)/12 months) = Cost per household per month
   ($1,109/370)/12=$0.25
2. (Cost per household per month/(MHI/12))*100 = Cost per household as a percent of MHI
   ($0.25/($40,182/12))*100 = 0.007%
3. Unemployment data was obtained from Missouri Department of Economic Development (April 2015) – http://www.missourieconomy.org/pdfs/urel1504.pdf
4. Median Household Income data from American Community Survey – Median income in the past 12 months – http://factfinder2.census.gov/faces/tableservices/jsf/pages/productview.xhtml?fpt=table
5. Population trend data was obtained from online at: 2012 Census Bureau Population Data - http://factfinder2.census.gov/faces/tableservices/jsf/pages/productview.xhtml?fpt=table, 2000 Census Bureau Population Data - http://www.census.gov/popest/data/cities/totals/2009/tables/SUB-EST2009-04-29.xls, 1990 Census Bureau Population Data - http://www.census.gov/prod/cen1990/cp1/cp-1-27.pdf
6. Poverty data – American Community Survey- http://factfinder2.census.gov/faces/nav/jsf/pages/searchresults.xhtml?refresh=t

STANDARD CONDITIONS FOR NPDES PERMITS
ISSUED BY
THE MISSOURI DEPARTMENT OF NATURAL RESOURCES
MISSOURI CLEAN WATER COMMISSION
REVISED
AUGUST 1, 2014

These Standard Conditions incorporate permit conditions as required by 40 CFR 122.41 or other applicable state statutes or regulations. These minimum conditions apply unless superseded by requirements specified in the permit.

Part I – General Conditions
Section A – Sampling, Monitoring, and Recording

1. **Sampling Requirements.**
   a. Samples and measurements taken for the purpose of monitoring shall be representative of the monitored activity.
   b. All samples shall be taken at the outfall(s) or Missouri Department of Natural Resources (Department) approved sampling location(s), and unless specified, before the effluent joins or is diluted by any other body of water or substance.

2. **Monitoring Requirements**.
   a. Records of monitoring information shall include:
      i. The date, exact place, and time of sampling or measurements;
      ii. The individual(s) who performed the sampling or measurements;
      iii. The date(s) analyses were performed;
      iv. The individual(s) who performed the analyses;
      v. The analytical techniques or methods used; and
      vi. The results of such analyses.
   b. If the permittee monitors any pollutant more frequently than required by the permit at the location specified in the permit using test procedures approved under 40 CFR Part 136, or another method required for an industry-specific waste stream under 40 CFR subchapters N or O, the results of such monitoring shall be included in the calculation and reported to the Department with the discharge monitoring report data (DMR) submitted to the Department pursuant to Section B, paragraph 7.

3. **Sample and Monitoring Calculations.** Calculations for all sample and monitoring results which require averaging of measurements shall utilize an arithmetic mean unless otherwise specified in the permit.

4. **Test Procedures**. The analytical and sampling methods used shall conform to the reference methods listed in 10 CSR 20-7.015 unless alternates are approved by the Department. The facility shall use sufficiently sensitive analytical methods for detecting, identifying, and measuring the concentrations of pollutants. The facility shall ensure that the selected methods are able to quantify the presence of pollutants in a given discharge at concentrations that are low enough to determine compliance with Water Quality Standards in 10 CSR 20-7.031 or effluent limitations unless provisions in the permit allow for other alternatives. A method is "sufficiently sensitive" when; 1) the method minimum level is at or below the level of the applicable water quality criterion for the pollutant or, 2) the method minimum level is above the applicable water quality criterion, but the amount of pollutant in a facility's discharge is high enough that the method detects and quantifies the level of pollutant in the discharge, or 3) the method has the lowest minimum level of the analytical methods approved under 10 CSR 20-7.015. These methods are also required for parameters that are listed as monitoring only, as the data collected may be used to determine if limitations need to be established. A permittee is responsible for working with their contractors to ensure that the analysis performed is sufficiently sensitive.

5. **Record Retention.** Except for records of monitoring information required by the permit related to the permittee's sewage sludge use and disposal activities, which shall be retained for a period of at least five (5) years (or longer as required by 40 CFR part 503), the permittee shall retain records of all monitoring information, including all calibration and maintenance records and all original strip chart recordings for continuous monitoring instrumentation, copies of all reports required by the permit, and records of all data used to complete the application for the permit, for a period of at least three (3) years from the date of the sample, measurement, report or application. This period may be extended by request of the Department at any time.

6. **Illegal Activities.**
   a. The Federal Clean Water Act provides that any person who falsifies, tampers with, or knowingly renders inaccurate any monitoring device or method required to be maintained under the permit shall, upon conviction, be punished by a fine of not more than $10,000, or by imprisonment for not more than two (2) years, or both. If a conviction of a person is for a violation committed after a first conviction of such person under this paragraph, punishment is a fine of not more than $20,000 per day of violation, or by imprisonment of not more than four (4) years, or both.
   b. The Missouri Clean Water Law provides that any person or who falsifies, tampers with, or knowingly renders inaccurate any monitoring device or method required to be maintained pursuant to sections 644.006 to 644.141 shall, upon conviction, be punished by a fine of not more than $10,000, or by imprisonment for not more than six (6) months, or by both. Second and successive convictions for violation under this paragraph by any person shall be punished by a fine of not more than $50,000 per day of violation, or by imprisonment for not more than two (2) years, or both.

Section B – Reporting Requirements

1. **Planned Changes.**
   a. The permittee shall give notice to the Department as soon as possible of any planned physical alterations or additions to the permitted facility when:
      i. The alteration or addition to a permitted facility may meet one of the criteria for determining whether a facility is a new source in 40 CFR 122.29(b); or
      ii. The alteration or addition could significantly change the nature or increase the quantity of pollutants discharged. This notification applies to pollutants which are subject neither to effluent limitations in the permit, nor to notification requirements under 40 CFR 122.42(a)(1);
      iii. The alteration or addition results in a significant change in the permittee's sludge use or disposal practices, and such alteration, addition, or change may justify the application of permit conditions that are different from or absent in the existing permit, including notification of additional use or disposal sites not reported during the permit application process or not reported pursuant to an approved land application plan;
      iv. Any facility expansions, production increases, or process modifications which will result in a new or substantially different discharge or sludge characteristics must be reported to the Department 60 days before the facility or process modification begins. Notification may be accomplished by application for a new permit. If the discharge does not violate effluent limitations specified in the permit, the facility is to submit a notice to the Department of the changed discharge at least 30 days before such changes. The Department may require a construction permit and/or permit modification as a result of the proposed changes at the facility.

2. **Non-compliance Reporting.**
   a. The permittee shall report any noncompliance which may endanger health or the environment. Relevant information shall be provided orally or via the current electronic method approved by the Department, within 24 hours from the time the permittee becomes aware of the circumstances, and shall be reported to the appropriate Regional Office during normal business hours or the Environmental Emergency Response hotline at 573-634-2436 outside of normal business hours. A written submission shall also be provided within five (5) business days of the time the permittee becomes aware of the circumstances. The written submission shall contain a description of the noncompliance and its cause; the period of noncompliance, including exact dates and times, and if the noncompliance has not been corrected, the anticipated time it is expected to continue; and steps taken or planned to reduce, eliminate, and prevent reoccurrence of the noncompliance.

b. The following shall be included as information which must be reported within 24 hours under this paragraph.
   i. Any unanticipated bypass which exceeds any effluent limitation in the permit.
   ii. Any upset which exceeds any effluent limitation in the permit.
   iii. Violation of a maximum daily discharge limitation for any of the pollutants listed by the Department in the permit required to be reported within 24 hours.
c. The Department may waive the written report on a case-by-case basis for reports under paragraph 2. b. of this section if the oral report has been received within 24 hours.

3. **Anticipated Noncompliance**. The permittee shall give advance notice to the Department of any planned changes in the permitted facility or activity which may result in noncompliance with permit requirements. The notice shall be submitted to the Department 60 days prior to such changes or activity.

4. **Compliance Schedules.** Reports of compliance or noncompliance with, or any progress reports on, interim and final requirements contained in any compliance schedule of the permit shall be submitted no later than 14 days following each schedule date. The report shall provide an explanation for the instance of noncompliance and a proposed schedule or anticipated date, for achieving compliance with the compliance schedule requirement.

5. **Other Noncompliance.** The permittee shall report all instances of noncompliance not reported under paragraphs 2, 3, and 6 of this section, at the time monitoring reports are submitted. The reports shall contain the information listed in paragraph 2. a. of this section.

6. **Other Information**. Where the permittee becomes aware that it failed to submit any relevant facts in a permit application, or submitted incorrect information in a permit application or in any report to the Department, it shall promptly submit such facts or information.

7. **Discharge Monitoring Reports.**
   a. Monitoring results shall be reported at the intervals specified in the permit.
   b. Monitoring results must be reported to the Department via the current method approved by the Department, unless the permittee has been granted a waiver from using the method. If the permittee has been granted a waiver, the permittee must use forms provided by the Department.
   c. Monitoring results shall be reported to the Department no later than the 28th day of the month following the end of the reporting period.

Section C – Bypass/Upset Requirements

1. **Definitions.**
   a. *Bypass*: the intentional diversion of waste streams from any portion of a treatment facility, except in the case of blending.
   b. *Severe Property Damage*: substantial physical damage to property, damage to the treatment facilities which causes them to become inoperable, or substantial and permanent loss of natural resources which can reasonably be expected to occur in the absence of a bypass. Severe property damage does not mean economic loss caused by delays in production.
   c. *Upset*: an exceptional incident in which there is unintentional and temporary noncompliance with technology based permit effluent limitations because of factors beyond the reasonable control of the permittee. An upset does not include noncompliance to the extent caused by operational error, improperly designed treatment facilities, inadequate treatment facilities, lack of preventive maintenance, or careless or improper operation.

2. **Bypass Requirements.**
   a. Bypass not exceeding limitations. The permittee may allow any bypass to occur which does not cause effluent limitations to be exceeded, but only if it also is for essential maintenance to assure efficient operation. These bypasses are not subject to the provisions of paragraphs 2. b. and 2. c. of this section.
   b. Notice.
      i. Anticipated bypass. If the permittee knows in advance of the need for a bypass, it shall submit prior notice, if possible at least 10 days before the date of the bypass.
      ii. Unanticipated bypass. The permittee shall submit notice of an unanticipated bypass as required in Section B – Reporting Requirements, paragraph 5 (24-hour notice).
   c. Prohibition of bypass.
      i. Bypass is prohibited, and the Department may take enforcement action against a permittee for bypass, unless:
         1. Bypass was unavoidable to prevent loss of life, personal injury, or severe property damage;
         2. There were no feasible alternatives to the bypass, such as the use of auxiliary treatment facilities, retention of untreated wastes, or maintenance during normal periods of equipment downtime. This condition is not satisfied if adequate back-up equipment should have been installed in the exercise of reasonable engineering judgment to prevent a bypass which occurred during normal periods of equipment downtime or preventive maintenance; and
         3. The permittee submitted notices as required under paragraph 2. b. of this section.
      ii. The Department may approve an anticipated bypass, after considering its adverse effects, if the Department determines that it will meet the three (3) conditions listed above in paragraph 2. c. i. of this section.

3. **Upset Requirements.**
   a. Effect of an upset. An upset constitutes an affirmative defense to an action brought for noncompliance with such technology based permit effluent limitations if the requirements of paragraph 3. b. of this section are met. No determination made during administrative review of claims that noncompliance was caused by upset, and before an action for noncompliance, is final administrative action subject to judicial review.
   b. Conditions necessary for a demonstration of upset. A permittee who wishes to establish the affirmative defense of upset shall demonstrate, through properly signed, contemporaneous operating logs, or other relevant evidence that:
      i. An upset occurred and that the permittee can identify the cause(s) of the upset;
      ii. The permitted facility was at the time being properly operated; and
      iii. The permittee submitted notice of the upset as required in Section B – Reporting Requirements, paragraph 2. b. ii. (24-hour notice).
      iv. The permittee complied with any remedial measures required under Section D – Administrative Requirements, paragraph 4.
   c. Burden of proof. In any enforcement proceeding, the permittee seeking to establish the occurrence of an upset has the burden of proof.

Section D – Administrative Requirements

1. **Duty to Comply.** The permittee must comply with all conditions of this permit. Any permit noncompliance constitutes a violation of the Missouri Clean Water Law and Federal Clean Water Act and is grounds for enforcement action; for permit termination, revocation and reissuance, or modification; or denial of a permit renewal application.
   a. The permittee shall comply with effluent standards or prohibitions established under section 307(a) of the Federal Clean Water Act for toxic pollutants and with standards for sewage sludge use or disposal established under section 405(d) of the CWA within the time provided in the regulations that establish these standards or prohibitions or standards for sewage sludge use or disposal, even if the permit has not yet been modified to incorporate the requirement.
   b. The Federal Clean Water Act provides that any person who violates section 301, 302, 306, 307, 308, 318 or 405 of the Act, or any permit condition or limitation implementing any such sections in a permit issued under section 402, or any requirement imposed in a pretreatment program approved under sections 402(a)(3) or 402(b)(8) of the Act, is subject to a civil penalty not to exceed $25,000 per day for each violation. The Federal Clean Water Act provides that any person who negligently violates sections 301, 302, 306, 307, 308, 318, or 405 of the Act, or any condition or limitation implementing any of such sections in a permit issued under section 402 of the Act, or any requirement

imposed in a pretreatment program approved under section 402(a)(3) or 402(b)(8) of the Act, is subject to criminal penalties of $2,500 to $25,000 per day of violation, or imprisonment of not more than one (1) year, or both. In the case of a second or subsequent conviction for a negligent violation, a person shall be subject to criminal penalties of not more than $50,000 per day of violation, or by imprisonment of not more than two (2) years, or both. Any person who knowingly violates such sections, or such conditions or limitations is subject to criminal penalties of $5,000 to $50,000 per day of violation, or imprisonment for not more than three (3) years, or both. In the case of a second or subsequent conviction for a knowing violation, a person shall be subject to criminal penalties of not more than $100,000 per day of violation, or imprisonment of not more than six (6) years, or both. Any person who knowingly violates section 301, 302, 303, 306, 307, 308, 318 or 405 of the Act, or any permit condition or limitation implementing any of such sections in a permit issued under section 402 of the Act, and who knows at that time that he thereby places another person in imminent danger of death or serious bodily injury, shall, upon conviction, be subject to a fine of not more than $250,000 or imprisonment of not more than 15 years, or both. In the case of a second or subsequent conviction for a knowing endangerment violation, a person shall be subject to a fine of not more than $500,000 or by imprisonment of not more than 30 years, or both. An organization, as defined in section 309(c)(3)(B)(iii) of the CWA, shall, upon conviction of violating the imminent danger provision, be subject to a fine of not more than $1,000,000 and can be fined up to $2,000,000 for second or subsequent convictions.

c. Any person may be assessed an administrative penalty by the EPA Director for violating section 301, 302, 306, 307, 308, 318 or 405 of this Act, or any permit condition or limitation implementing any of such sections in a permit issued under section 402 of this Act. Administrative penalties for Class I violations are not to exceed $10,000 per violation, with the maximum amount of any Class I penalty assessed not to exceed $25,000. Penalties for Class II violations are not to exceed $10,000 per day for each day during which the violation continues, with the maximum amount of any Class II penalty not to exceed $125,000.

d. It is unlawful for any person to cause or permit any discharge of water contaminants from any water contaminant or point source located in Missouri in violation of sections 644.006 to 644.141 of the Missouri Clean Water Law, or any standard, rule or regulation promulgated by the commission. In the event the commission or the director determines that any provision of sections 644.006 to 644.141 of the Missouri Clean Water Law or standard, rules, limitations or regulations promulgated pursuant thereto, or permits issued by, or any final abatement order, other order, or determination made by the commission or the director, or any filing requirement pursuant to sections 644.006 to 644.141 of the Missouri Clean Water Law or any other provision which this state is required to enforce pursuant to any federal water pollution control act, is being, was, or is in imminent danger of being violated, the commission or director may cause to have instituted a civil action in any court of competent jurisdiction for the injunctive relief to prevent any such violation or further violation or for the assessment of a penalty not to exceed $10,000 per day for each day, or part thereof, the violation occurred and continues to occur, or both, as the court deems proper. Any person who willfully or negligently commits any violation in this paragraph shall, upon conviction, be punished by a fine of not less than $2,500 nor more than $25,000 per day of violation, or by imprisonment for not more than one year, or both. Second and successive convictions for violation of the same provision of this paragraph by any person shall be punished by a fine of not more than $50,000 per day of violation, or by imprisonment for not more than two (2) years, or both.

2. **Duty to Reapply.**
   a. If the permittee wishes to continue an activity regulated by this permit after the expiration date of this permit, the permittee must apply for and obtain a new permit.
   b. A permittee with a currently effective site-specific permit shall submit an application for renewal at least 180 days before the expiration date of the existing permit, unless permission for a later date has been granted by the Department. (The Department shall not grant permission for applications to be submitted later than the expiration date of the existing permit.)
   c. A permittees with currently effective general permit shall submit an application for renewal at least 30 days before the existing permit expires, unless the permittee has been notified by the Department that an earlier application must be made. The Department may grant permission for a later submission date. (The Department shall not grant permission for applications to be submitted later than the expiration date of the existing permit.)

3. **Need to Halt or Reduce Activity Not a Defense.** It shall not be a defense for a permittee in an enforcement action that it would have been necessary to halt or reduce the permitted activity in order to maintain compliance with the conditions of this permit.

4. **Duty to Mitigate.** The permittee shall take all reasonable steps to minimize or prevent any discharge or sludge use or disposal in violation of this permit which has a reasonable likelihood of adversely affecting human health or the environment.

5. **Proper Operation and Maintenance**. The permittee shall at all times properly operate and maintain all facilities and systems of treatment and control (and related appurtenances) which are installed or used by the permittee to achieve compliance with the conditions of this permit. Proper operation and maintenance also includes adequate laboratory controls and appropriate quality assurance procedures. This provision requires the operation of back-up or auxiliary facilities or similar systems which are installed by a permittee only when the operation is necessary to achieve compliance with the conditions of the permit.

6. **Permit Actions.**
   a. Subject to compliance with statutory requirements of the Law and Regulations and applicable Court Order, this permit may be modified, suspended, or revoked in whole or in part during its term for cause including, but not limited to, the following:
      i. Violations of any terms or conditions of this permit or the law;
      ii. Having obtained this permit by misrepresentation or failure to disclose fully any relevant facts;
      iii. A change in any circumstances or conditions that requires either a temporary or permanent reduction or elimination of the authorized discharge; or
      iv. Any reason set forth in the Law or Regulations.
   b. The filing of a request by the permittee for a permit modification, revocation and reissuance, or termination, or a notification of planned changes or anticipated noncompliance does not stay any permit condition.

7. **Permit Transfer.**
   a. Subject to 10 CSR 20-6.010, an operating permit may be transferred upon submission to the Department of an application to transfer signed by the existing owner and the new owner, unless prohibited by the terms of the permit. Until such time the permit is officially transferred, the original permittee remains responsible for complying with the terms and conditions of the existing permit.
   b. The Department may require modification or revocation and reissuance of the permit to change the name of the permittee and incorporate such other requirements as may be necessary under the Missouri Clean Water Law or the Federal Clean Water Act.
   c. The Department, within 30 days of receipt of the application, shall notify the new permittee of its intent to revoke or reissue or transfer the permit.

8. **Toxic Pollutants.** The permittee shall comply with effluent standards or prohibitions established under section 307(a) of the Federal Clean Water Act for toxic pollutants and with standards for sewage sludge use or disposal established under section 405(d) of the Federal Clean Water Act within the time provided in the regulations that establish these standards or prohibitions or standards for sewage sludge use or disposal, even if the permit has not yet been modified to incorporate the requirement.

9. **Property Rights.** This permit does not convey any property rights of any sort, or any exclusive privilege.

10. **Duty to Provide Information.** The permittee shall furnish to the Department, within a reasonable time, any information which the Department may request to determine whether cause exists for modifying, revoking and reissuing, or terminating this permit or to determine compliance with this permit. The permittee shall also furnish to the Department upon request, copies of records required to be kept by this permit.

11. **Inspection and Entry.** The permittee shall allow the Department, or an authorized representative (including an authorized contractor acting as a representative of the Department), upon presentation of credentials and other documents as may be required by law, to:
    a. Enter upon the permittee's premises where a regulated facility or activity is located or conducted, or where records must be kept under the conditions of the permit;
    b. Have access to and copy, at reasonable times, any records that must be kept under the conditions of this permit;
    c. Inspect at reasonable times any facilities, equipment (including monitoring and control equipment), practices, or operations regulated or required under this permit; and
    d. Sample or monitor at reasonable times, for the purposes of assuring permit compliance or as otherwise authorized by the Federal Clean Water Act or Missouri Clean Water Law, any substances or parameters at any location.

12. **Closure of Treatment Facilities.**
    a. Persons who cease operation or plan to cease operation of waste, wastewater, and sludge handling and treatment facilities shall close the facilities in accordance with a closure plan approved by the Department.
    b. Operating Permits under 10 CSR 20-6.010 or under 10 CSR 20-6.015 are required until all waste, wastewater, and sludges have been disposed of in accordance with the closure plan approved by the Department and any disturbed areas have been properly stabilized. Disturbed areas will be considered stabilized when perennial vegetation, pavement, or structures using permanent materials cover all areas that have been disturbed. Vegetative cover, if used, shall be at least 70% plant density over 100% of the disturbed area.

13. **Signatory Requirement.**
    a. All permit applications, reports required by the permit, or information requested by the Department shall be signed and certified. (See 40 CFR 122.22 and 10 CSR 20-6.010)
    b. The Federal Clean Water Act provides that any person who knowingly makes any false statement, representation, or certification in any record or other document submitted or required to be maintained under this permit, including monitoring reports or reports of compliance or non-compliance shall, upon conviction, be punished by a fine of not more than $10,000 per violation, or by imprisonment for not more than six (6) months per violation, or by both.
    c. The Missouri Clean Water Law provides that any person who knowingly makes any false statement, representation or certification in any application, record, report, plan, or other document filed or required to be maintained pursuant to sections 644.006 to 644.141 shall, upon conviction, be punished by a fine of not more than ten thousand dollars, or by imprisonment for not more than six months, or by both.

14. **Severability.** The provisions of the permit are severable, and if any provision of the permit, or the application of any provision of the permit to any circumstance, is held invalid, the application of such provision to other circumstances, and the remainder of the permit, shall not be affected thereby.

STANDARD CONDITIONS FOR NPDES PERMITS
ISSUED BY
THE MISSOURI DEPARTMENT OF NATURAL RESOURCES
MISSOURI CLEAN WATER COMMISSION
REVISED
MAY 1, 2013

PART II - SPECIAL CONDITIONS – PUBLICLY OWNED TREATMENT WORKS
SECTION A – INDUSTRIAL USERS

1. Definitions

Definitions as set forth in the Missouri Clean Water Laws and approved by the Missouri Clean Water Commission shall apply to terms used herein.

Significant Industrial User (SIU). Except as provided in the *General Pretreatment Regulation* 10 CSR 20-6.100, the term Significant Industrial User means:

1. All Industrial Users subject to Categorical Pretreatment Standards; and
2. Any other Industrial User that: discharges an average of 25,000 gallons per day or more of process wastewater to the Publicly-Owned Treatment Works (POTW) (excluding sanitary, noncontact cooling and boiler blowdown wastewater); contributes a process wastestream which makes up 5 percent or more of the average dry weather hydraulic or organic capacity of the POTW treatment plant; or is designated as such by the Control Authority on the basis that the Industrial User has a reasonable potential for adversely affecting the POTW's or for violating any Pretreatment Standard or requirement.

Clean Water Act (CWA) is the the federal Clean Water Act of 1972, 33 U.S.C. § 1251 et seq. (2002).

2. Identification of Industrial Discharges

Pursuant to 40 CFR 122.44(j)(1), all POTWs shall identify, in terms of character and volume of pollutants, any Significant Industrial Users discharging to the POTW subject to Pretreatment Standards under section 307(b) of the CWA and 40 CFR 403.

3. Application Information

Applications for renewal or modification of this permit must contain the information about industrial discharges to the POTW pursuant to 40 CFR 122.21(j)(6)

4. Notice to the Department

Pursuant to 40 CFR 122.42(b), all POTWs must provide adequate notice of the following:

1. Any new introduction of pollutants into the POTW from an indirect discharger which would be subject to section 301 or 306 of CWA if it were directly discharging these pollutants; and
2. Any substantial change into the volume or character of pollutants being introduced into that POTW by a source introducing pollutants into the POTW at the time of issuance of the permit.
3. For purposes of this paragraph, adequate notice shall include information on:
   i. the quality and quantity of effluent introduced into the POTW, and
   ii. any anticipated impact of the change on the quantity or quality of effluent to be discharged from the POTW.

For POTWs without an approved pretreatment program, the notice of industrial discharges which was not included in the permit application shall be made as soon as practicable. For POTWs with an approved pretreatment program, notice is to be included in the annual pretreatment report required in the special conditions of this permit. Notice may be sent to:

Missouri Department of Natural Resources
Water Protection Program
Attn: Pretreatment Coordinator
P.O. Box 176
Jefferson City, MO 65102

STANDARD CONDITIONS FOR NPDES PERMITS
ISSUED BY
THE MISSOURI DEPARTMENT OF NATURAL RESOURCES
MISSOURI CLEAN WATER COMMISSION
March 1, 2015

PART III – SLUDGE AND BIOSOLIDS FROM DOMESTIC AND INDUSTRIAL WASTEWATER TREATMENT FACILITIES

SECTION A – GENERAL REQUIREMENTS

1. This permit pertains to sludge requirements under the Missouri Clean Water Law and regulation for domestic wastewater and industrial process wastewater. This permit also incorporates applicable federal sludge disposal requirements under 40 CFR 503 for domestic wastewater. The Environmental Protection Agency (EPA) has principal authority for permitting and enforcement of the federal sludge regulations under 40 CFR 503 for domestic wastewater. EPA has reviewed and accepted these standard sludge conditions. EPA may choose to issue a separate sludge addendum to this permit or a separate federal sludge permit at their discretion to further address the federal requirements.
2. These PART III Standard Conditions apply only to sludge and biosolids generated at domestic wastewater treatment facilities, including public owned treatment works (POTW), privately owned facilities and sludge or biosolids generated at industrial facilities.
3. Sludge and Biosolids Use and Disposal Practices:
    a. The permittee is authorized to operate the sludge and biosolids treatment, storage, use, and disposal facilities listed in the facility description of this permit.
    b. The permittee shall not exceed the design sludge volume listed in the facility description and shall not use sludge disposal methods that are not listed in the facility description, without prior approval of the permitting authority.
    c. The permittee is authorized to operate the storage, treatment or generating sites listed in the Facility Description section of this permit.
4. Sludge Received from other Facilities:
    a. Permittees may accept domestic wastewater sludge from other facilities including septic tank pumpings from residential sources as long as the design sludge volume is not exceeded and the treatment facility performance is not impaired.
    b. The permittee shall obtain a signed statement from the sludge generator or hauler that certifies the type and source of the sludge
5. These permit requirements do not supersede nor remove liability for compliance with county and other local ordinances.
6. These permit requirements do not supersede nor remove liability for compliance with other environmental regulations such as odor emissions under the Missouri Air Pollution Control Law and regulations.
7. This permit may (after due process) be modified, or alternatively revoked and reissued, to comply with any applicable sludge disposal standard or limitation issued or approved under Section 405(d) of the Clean Water Actor under Chapter 644 RSMo.
8. In addition to STANDARD CONDITIONS, the Department may include sludge limitations in the special conditions portion or other sections of a site specific permit.
9. Alternate Limits in the Site Specific Permit.
   Where deemed appropriate, the Department may require an individual site specific permit in order to authorize alternate limitations:
    a. A site specific permit must be obtained for each operating location, including application sites.
    b. To request a site specific permit, an individual permit application, permit fee, and supporting documents shall be submitted for each operating location. This shall include a detailed sludge/biosolids management plan or engineering report.
10. Exceptions to these Standard Conditions may be authorized on a case-by-case basis by the Department, as follows:
    a. The Department will prepare a permit modification and follow permit notice provisions as applicable under 10 CSR 20-6.020, 40 CFR 124.10, and 40 CFR 501.15(a)(2)(ix)(E). This includes notification of the owner of the property located adjacent to each land application site, where appropriate.
    b. Exceptions cannot be granted where prohibited by the federal sludge regulations under 40 CFR 503.

SECTION B – DEFINITIONS

1. Best Management Practices include agronomic loading rates, soil conservation practices and other site restrictions.
2. Biosolids means organic fertilizer or soil amendment produced by the treatment of domestic wastewater sludge.
3. Biosolids land application facility is a facility where biosolids are spread onto the land at agronomic rates for production of food or fiber. The facility includes any structures necessary to store the biosolids until soil, weather, and crop conditions are favorable for land application.
4. Class A biosolids means a material that has met the Class A pathogen reduction requirements or equivalent treatment by a Process to Further Reduce Pathogens (PFRP) in accordance with 40 CFR 503.
5. Class B biosolids means a material that has met the Class B pathogen reduction requirements or equivalent treatment by a Process to Significantly Reduce Pathogens (PFRP) in accordance with 40 CFR 503.
6. Domestic wastewater means wastewater originating from the sanitary conveniences of residences, commercial buildings, factories and institutions; or co-mingled sanitary and industrial wastewater processed by a (POTW) or a privately owned facility.
7. Industrial wastewater means any wastewater, also known as process water, not defined as domestic wastewater. Per 40 CFR Part 122, process water means any water which, during manufacturing or processing, comes into direct contact with or results from the production or use of any raw material, intermediate product, finished product, byproduct, or waste product.
8. Mechanical treatment plants are wastewater treatment facilities that use mechanical devices to treat wastewater, including septic tanks, sand filters, extended aeration, activated sludge, contact stabilization, trickling filters, rotating biological discs, and other similar facilities. It does not include wastewater treatment lagoons and constructed wetlands for wastewater treatment.
9. Operating location as defined in 10 CSR 20-2.010 is all contiguous lands owned, operated or controlled by one (1) person or by two (2) or more persons jointly or as tenants in common.
10. Plant Available Nitrogen (PAN) is the nitrogen that will be available to plants during the growing seasons after biosolids application.
11. Public contact site is land with a high potential for contact by the public. This includes, but is not limited to, public parks, ball fields, cemeteries, plant nurseries, turf farms, and golf courses.
12. Sludge is the solid, semisolid, or liquid residue removed during the treatment of wastewater. Sludge includes septage removed from septic tanks or equivalent facilities. Sludge does not include carbon coal byproducts (CCBs)
13. Sludge lagoon is part of a mechanical wastewater treatment facility. A sludge lagoon is an earthen basin that receives sludge that has been removed from a wastewater treatment facility. It does not include a wastewater treatment lagoon or sludge treatment units that are not a part of a mechanical wastewater treatment facility.
14. Septage is the material pumped from residential septic tanks and similar treatment works (with a design population of less than 150 people). The standard for biosolids from septage is different from other sludges.

SECTION C – MECHANICAL WASTEWATER TREATMENT FACILITIES

1. Sludge shall be routinely removed from wastewater treatment facilities and handled according to the permit facility description and sludge conditions of this permit.
2. The permittee shall operate the facility so that there is no sludge discharged to waters of the state.
3. Mechanical treatment plants shall have separate sludge storage compartments in accordance with 10 CSR 20, Chapter 8. Failure to remove sludge from these storage compartments on the required design schedule is a violation of this permit.

SECTION D – SLUDGE DISPOSED AT OTHER TREATMENT FACILITY OR CONTRACT HAULER

1. This section applies to permittees that haul sludge to another treatment facility for disposal or use contract haulers to remove and dispose of sludge.
2. Permittees that use contract haulers are responsible for compliance with all the terms of this permit including final disposal, unless the hauler has a separate permit for sludge or biosolids disposal issued by the Department; or the hauler transports the sludge to another permitted treatment facility.
3. Haulers who land apply septage must obtain a state permit.
4. Testing of sludge, other than total solids content, is not required if sludge is hauled to a municipal wastewater treatment facility or other permitted wastewater treatment facility, unless it is required by the accepting facility.

SECTION E – INCINERATION OF SLUDGE

1. Sludge incineration facilities shall comply with the requirements of 40 CFR 503 Subpart E; air pollution control regulations under 10 CSR 10; and solid waste management regulations under 10 CSR 80.
2. Permittee may be authorized under the facility description of this permit to store incineration ash in lagoons or ash ponds. This permit does not authorize the disposal of incineration ash. Incineration ash shall be disposed in accordance with 10 CSR 80; or if the ash is determined to be hazardous with 10 CSR 25.
3. In addition to normal sludge monitoring, incineration facilities shall report the following as part of the annual report, quantity of sludge incinerated, quantity of ash generated, quantity of ash stored, and ash used or disposal method, quantity, and location. Permittee shall also provide the name of the disposal facility and the applicable permit number.

SECTION F – SURFACE DISPOSAL SITES AND SLUDGE LAGOONS

1. Surface disposal sites of domestic facilities shall comply with the requirements in 40 CFR 503 Subpart C; air pollution control regulations under 10 CSR 10; and solid waste management regulations under 10 CSR 80.
2. Sludge storage lagoons are temporary facilities and are not required to obtain a permit as a solid waste management facility under 10 CSR 80. In order to maintain sludge storage lagoons as storage facilities, accumulated sludge must be removed routinely, but not less than once every two years unless an alternate schedule is approved in the permit. The amount of sludge removed will be dependent on sludge generation and accumulation in the facility. Enough sludge must be removed to maintain adequate storage capacity in the facility.
    a. In order to avoid damage to the lagoon seal during cleaning, the permittee may leave a layer of sludge on the bottom of the lagoon, upon prior approval of the Department; or
    b. Permittee shall close the lagoon in accordance with Section H.

SECTION G – LAND APPLICATION

1. The permittee shall not land apply sludge or biosolids unless land application is authorized in the facility description or the special conditions of the issued NPDES permit.
2. Land application sites within a 20 miles radius of the wastewater treatment facility are authorized under this permit when biosolids are applied for beneficial use in accordance with these standard conditions unless otherwise specified in a site specific permit. If the permittee's land application site is greater than a 20 mile radius of the wastewater treatment facility, approval must be granted from the Department.
3. Land application shall not adversely affect a threatened or endangered species or its designated critical habitat.
4. Biosolids shall not be applied unless authorized in this permit or exempted under 10 CSR 20, Chapter 6.
    a. This permit does not authorize the land application of domestic sludge except for when sludge meets the definition of biosolids.
    b. This permit authorizes "Class A or B" biosolids derived from domestic wastewater and/or process water sludge to be land applied onto grass land, crop land, timber or other similar agricultural or silviculture lands at rates suitable for beneficial use as organic fertilizer and soil conditioner.
5. Public Contact Sites:

    Permittees who wish to apply Class A biosolids to public contact sites must obtain approval from the Department after two years of proper operation with acceptable testing documentation that shows the biosolids meet Class A criteria. A shorter length of testing will be allowed with prior approval from the Department. Authorization for land applications must be provided in the special conditions section of this permit or in a separate site specific permit.
    a. After Class B biosolids have been land applied, public access must be restricted for 12 months.
    b. Class B biosolids are only land applied to root crops, home gardens or vegetable crops whose edible parts will not be for human consumption.
6. Agricultural and Silvicultural Sites:

    Septage – Based on Water Quality guide 422 (WQ422) published by the University of Missouri
    a. Haulers that land apply septage must obtain a state permit
    b. Do not apply more than 30,000 gallons of septage per acre per year.
    c. Septage tanks are designed to retain sludge for one to three years which will allow for a larger reduction in pathogens and vectors, as compared to other mechanical type treatment facilities.
    d. To meet Class B sludge requirements, maintain septage at 12 pH for at least thirty (30) minutes before land application. 50 pounds of hydrated lime shall be added to each 1,000 gallons of septage in order to meet pathogen and vector stabilization for septage biosolids applied to crops, pastures or timberland.
    e. Lime is to be added to the pump truck and not directly to the septic tanks, as lime would harm the beneficial bacteria of the septic tank.

Biosolids - Based on Water Quality guide 423, 424, and 425 (WQ423, WQ424, WQ425) published by the University of Missouri;

a. Biosolids shall be monitored to determine the quality for regulated pollutants

b. The number of samples taken is directly related to the amount of sludge produced by the facility (See Section I of these Standard Conditions). Report as dry weight unless otherwise specified in the site specific permit. Samples should be taken only during land application periods. When necessary, it is permissible to mix biosolids with lower concentrations of biosolids as well as other suitable Department approved material to reach the maximum concentration of pollutants allowed.

c. Table 1 gives the maximum concentration allowable to protect water quality standards

TABLE 1

Biosolids ceiling concentration [1]	
Pollutant	Milligrams per kilogram dry weight
Arsenic	75
Cadmium	85
Copper	4,300
Lead	840
Mercury	57
Molybdenum	75
Nickel	420
Selenium	100
Zinc	7,500

[1] Land application is not allowed if the sludge concentration exceeds the maximum limits for any of these pollutants

d. The low metal concentration biosolids has reduced requirements because of its higher quality and can safely be applied for 100 years or longer at typical agronomic loading rates. (See Table 2)

TABLE 2

Biosolids Low Metal Concentration [1]	
Pollutant	Milligrams per kilogram dry weight
Arsenic	41
Cadmium	39
Copper	1,500
Lead	300
Mercury	17
Nickel	420
Selenium	36
Zinc	2,800

[1] You may apply low metal biosolids without tracking cumulative metal limits, provided the cumulative application of biosolids does not exceed 500 dry tons per acre.

e. Each pollutant in Table 3 has an annual and a total cumulative loading limit, based on the allowable pounds per acre for various soil categories.

TABLE 3

Pollutant	CEC 15+		CEC 5 to 15		CEC 0 to 5	
	Annual	Total [1]	Annual	Total [1]	Annual	Total [1]
Arsenic	1.8	36.0	1.8	36.0	1.8	36.0
Cadmium	1.7	35.0	0.9	9.0	0.4	4.5
Copper	66.0	1,335.0	25.0	250.0	12.0	125.0
Lead	13.0	267.0	13.0	267.0	13.0	133.0
Mercury	0.7	15.0	0.7	15.0	0.7	15.0
Nickel	19.0	347.0	19.0	250.0	12.0	125.0
Selenium	4.5	89.0	4.5	44.0	1.6	16.0
Zinc	124.0	2,492.0	50.0	500.0	25.0	250.0

[1] Total cumulative loading limits for soils with equal or greater than 6.0 pH (salt based test) or 6.5 pH (water based test)

TABLE 4 - Guidelines for land application of other trace substances [1]

Cumulative Loading	
Pollutant	Pounds per acre
Aluminum	4,000[2]
Beryllium	100
Cobalt	50
Fluoride	800
Manganese	500
Silver	200
Tin	1,000
Dioxin	(10 ppt in soil)[3]
Other	[4]

[1] Design of land treatment systems for Industrial Waste, 1979. Michael Ray Overcash, North Carolina State University and Land Treatment of Municipal Wastewater, EPA 1981.)

[2] This applies for a soil with a pH between 6.0 and 7.0 (salt based test) or a pH between 6.5 to 7.5 (water based test). Case-by-case review is required for higher pH soils.

[3] Total Dioxin Toxicity Equivalents (TEQ) in soils, based on a risk assessment under 40 CFR 744, May 1998.

[4] Case by case review. Concentrations in sludge should not exceed the 95th percentile of the National Sewage Sludge Survey, EPA, January 2009.

Best Management Practices – Based on Water Quality guide 426 (WQ426) published by the University of Missouri

a. Use best management practices when applying biosolids.
b. Biosolids cannot discharge from the land application site
c. Biosolid application is subject to the Missouri Department of Agriculture State Milk Board concerning grazing restrictions of lactating dairy cattle.
d. Biosolid application must be in accordance with section 4 of the Endangered Species Act.
e. Do not apply more than the agronomic rate of nitrogen needed.
f. The applicator must document the Plant Available Nitrogen (PAN) loadings, available nitrogen in the soil, and crop removal when either of the following occurs: 1) When biosolids are greater than 50,000 mg/kg TN; or 2) When biosolids are land applied at an application rate greater than two dry tons per acre per year.
    i. PAN can be determined as follows and is in accordance with WQ426
    (Nitrate + nitrite nitrogen) + (organic nitrogen x 0.2) + (ammonia nitrogen x volatilization factor[1]).
    [1] Volatilization factor is 0.7 for surface application and 1 for subsurface application.
g. Buffer zones are as follows:
    i. 300 feet of a water supply well, sinkhole, lake, pond, water supply reservoir or water supply intake in a stream;
    ii. 300 feet of a losing stream, no discharge stream, stream stretches designated for whole body contact recreation, wild and scenic rivers, Ozark National Scenic Riverways or outstanding state resource waters as listed in the Water Quality Standards, 10 CSR 20-7.031;
    iii. 150 feet if dwellings;
    iv. 100 feet of wetlands or permanent flowing streams;
    v. 50 feet of a property line or other waters of the state, including intermittent flowing streams.
h. Slope limitation for application sites are as follows;
    i. A slope 0 to 6 percent has no rate limitation
    ii. Applied to a slope 7 to 12 percent, the applicator may apply biosolids when soil conservation practices are used to meet the minimum erosion levels
    iii. Slopes > 12 percent, apply biosolids only when grass is vegetated and maintained with at least 80 percent ground cover at a rate of two dry tons per acre per year or less.
i. No biosolids may be land applied in an area that it is reasonably certain that pollutants will be transported into waters of the state.
j. Do not apply biosolids to sites with soil that is snow covered, frozen or saturated with liquid without prior approval by the Department.
k. Biosolids / sludge applicators must keep detailed records up to five years.

SECTION H – CLOSURE REQUIREMENTS

1. This section applies to all wastewater facilities (mechanical, industrial, and lagoons) and sludge or biosolids storage and treatment facilities and incineration ash ponds. It does not apply to land application sites.
2. Permittees of a domestic wastewater facility who plan to cease operation must obtain Department approval of a closure plan which addresses proper removal and disposal of all residues, including sludge, biosolids. Mechanical plants, sludge lagoons, ash ponds and other storage structures must obtain approval of a closure plan from the Department. Permittee must maintain this permit until the facility is closed in accordance with the approved closure plan per 10 CSR 20 – 6. 010 and 10 CSR 20 – 6.015.
3. Residuals that are left in place during closure of a lagoon or earthen structure or ash pond shall not exceed the agricultural loading rates as follows:
    a. Residuals shall meet the monitoring and land application limits for agricultural rates as referenced in Section H of these standard conditions.
    b. If a wastewater treatment lagoon has been in operation for 15 years or more without sludge removal, the sludge in the lagoon qualifies as a Class B biosolids with respect to pathogens due to anaerobic digestion, and testing for fecal coliform is not required. For other lagoons, testing for fecal coliform is required to show compliance with Class B biosolids limitations. In order to reach Class B biosolids requirements, fecal coliform must be less than 2,000,000 colony forming units or 2,000,000 most probable number. All fecal samples must be presented as geometric mean per gram.
    c. The allowable nitrogen loading that may be left in the lagoon shall be based on the plant available nitrogen (PAN) loading. For a grass cover crop, the allowable PAN is 300 pounds/acre.
        i. PAN can be determined as follows:

        (Nitrate + nitrite nitrogen) + (organic nitrogen x 0.2) + (ammonia nitrogen x volatilization factor[1]).

        [1] Volatilization factor is 0.7 for surface application and 1 for subsurface application.
4. When closing a domestic wastewater treatment lagoon with a design treatment capacity equal or less than 150 persons, the residuals are considered "septage" under the similar treatment works definition. See Section B of these standard conditions. Under the septage category, residuals may be left in place as follows:
    a. Testing for metals or fecal coliform is not required
    b. If the wastewater treatment lagoon has been in use for less than 15 years, mix lime with the sludge at a rate of 50 pounds of hydrated lime per 1000 gallons (134 cubic feet) of sludge.
    c. The amount of sludge that may be left in the lagoon shall be based on the plant available nitrogen (PAN) loading. 100 dry tons/acre of sludge may be left in the basin without testing for nitrogen. If 100 dry tons/acre or more will be left in the lagoon, test for nitrogen and determine the PAN using the calculation above. Allowable PAN loading is 300 pounds/acre.
5. Residuals left within the domestic lagoon shall be mixed with soil on at least a 1 to 1 ratio, the lagoon berm shall be demolished, and the site shall be graded and contain ≥70% vegetative density over 100% of the site so as to avoid ponding of storm water and provide adequate surface water drainage without creating erosion.
6. Lagoons and/or earthen structure and/or ash pond closure activities shall obtain a storm water permit for land disturbance activities that equal or exceed one acre in accordance with 10 CSR 20-6.200
7. When closing a mechanical wastewater and/or industrial process wastewater plant; all sludge must be cleaned out and disposed of in accordance with the Department approved closure plan before the permit for the facility can be terminated.
    a. Land must be stabilized which includes any grading, alternate use or fate upon approval by the Department, remediation, or other work that exposes sediment to stormwater per 10 CSR 20-6.200. The site shall be graded and contain ≥70% vegetative density over 100% of the site, so as to avoid ponding of storm water and provide adequate surface water drainage without creating erosion.
    b. Per 10 CSR 20-6.015(4)(B)6, Hazardous Waste shall not be land applied or disposed during industrial and mechanical plant closures unless in accordance with Missouri Hazardous Waste Management Law and Regulations under 10 CSR 25.
    c. After demolition of the mechanical plant / industrial plant, the site must only contain clean fill defined in RSMo 260.200 (5) as uncontaminated soil, rock, sand, gravel, concrete, asphaltic concrete, cinderblocks, brick, minimal amounts of wood and metal, and inert solids as approved by rule or policy of the Department for fill or other beneficial use. Other solid wastes must be removed.
8. If sludge from the domestic lagoon or mechanical treatment plant exceeds agricultural rates under Section G and/or H, a landfill permit or solid waste disposal permit must be obtained if the permittee chooses to seek authorization for on-site sludge disposal under the Missouri Solid Waste Management Law and regulations per 10 CSR 80, and the permittee must comply with the surface disposal requirements under 40 CFR 503, Subpart C.

SECTION I – MONITORING FREQUENCY

1. At a minimum, sludge or biosolids shall be tested for volume and percent total solids on a frequency that will accurately represent sludge quantities produced and disposed. Please see the table below.

TABLE 5

Design Sludge Production (dry tons per year)	Monitoring Frequency (See Notes 1, 2 and 3)			
	Metals, Pathogens and Vectors	Nitrogen TKN [1]	Nitrogen PAN [2]	Priority Pollutants and TCLP [3]
0 to 100	1 per year	1 per year	1 per month	1 per year
101 to 200	biannual	biannual	1 per month	1 per year
201 to 1,000	quarterly	quarterly	1 per month	1 per year
1,001 to 10,000	1 per month	1 per month	1 per week	--[4]
10,001 +	1 per week	1 per week	1 per day	--[4]

[1] Test total Kjeldahl nitrogen, if biosolids application is 2 dry tons per acre per year or less.
[2] Calculate plant available nitrogen (PAN) when either of the following occurs: 1) when biosolids are greater than 50,000 mg/kg TN; or 2) when biosolids are land applied at an application rate greater than two dry tons per acre per year.
[3] Priority pollutants (40 CFR 122.21, Appendix D, Tables II and III) and toxicity characteristic leaching procedure (40 CFR 261.24) is required only for permit holders that must have a pre-treatment program.
[4] One sample for each 1,000 dry tons of sludge.

Note 1: Total solids: A grab sample of sludge shall be tested one per day during land application periods for percent total solids. This data shall be used to calculate the dry tons of sludge applied per acre.
Note 2: Total Phosphorus: Total phosphorus and total potassium shall be tested at the same monitoring frequency as metals.
Note 3: Table 5 is not applicable for incineration

2. If you own a wastewater treatment lagoon or sludge lagoon that is cleaned out once a year or less, you may choose to sample only when the sludge is removed or the lagoon is closed. Test one composite sample for each 100 dry tons of sludge or biosolids removed from the lagoon during the year within the lagoon at closing. Composite sample must represent various areas at one-foot depth.
3. Additional testing may be required in the special conditions or other sections of the permit. Permittees receiving industrial wastewater may be required to conduct additional testing upon request from the Department.
4. At this time, the Department recommends monitoring requirements shall be performed in accordance with, "POTW Sludge Sampling and Analysis Guidance Document," United States Environmental Protection Agency, August 1989, and the subsequent revisions.

SECTION J – RECORD KEEPING AND REPORTING REQUIREMENTS

1. The permittee shall maintain records on file at the facility for at least five years for the items listed in these standard conditions and any additional items in the Special Conditions section of this permit. This shall include dates when the sludge facility is checked for proper operation, records of maintenance and repairs and other relevant information.
2. Reporting period
   a. By January 28th of each year, an annual report shall be submitted for the previous calendar year period for all mechanical wastewater treatment facilities, sludge lagoons, and sludge or biosolids disposal facilities.
   b. Permittees with wastewater treatment lagoons shall submit the above annual report only when sludge or biosolids are removed from the lagoon during the report period or when the lagoon is closed.
3. Report Forms. The annual report shall be submitted on report forms provided by the Department or equivalent forms approved by the Department.
4. Reports shall be submitted as follows:

   Major facilities (those serving 10,000 persons or 1 million gallons per day) shall report to both the Department and EPA. Other facilities need to report only to the Department. Reports shall be submitted to the addresses listed as follows:

   DNR regional office listed in your permit
   (see cover letter of permit)
   ATTN: Sludge Coordinator

   EPA Region VII
   Water Compliance Branch (WACM)
   Sludge Coordinator
   11201 Renner Blvd.
   Lenexa, KS 66219

5. Annual report contents. The annual report shall include the following:
    a. Sludge and biosolids testing performed. Include a copy or summary of all test results, even if not required by the permit.
    b. Sludge or biosolids quantity shall be reported as dry tons for quantity generated by the wastewater treatment facility, the quantity stored on site at the end of the year, and the quantity used or disposed.
    c. Gallons and % solids data used to calculate the dry ton amounts.
    d. Description of any unusual operating conditions.
    e. Final disposal method, dates, and location, and person responsible for hauling and disposal.
        i. This must include the name, address for the hauler and sludge facility. If hauled to a municipal wastewater treatment facility, sanitary landfill, or other approved treatment facility, give the name of that facility.
        ii. Include a description of the type of hauling equipment used and the capacity in tons, gallons, or cubic feet.
    f. Contract Hauler Activities:
    If contract hauler, provide a copy of a signed contract from the contractor. Permittee shall require the contractor to supply information required under this permit for which the contractor is responsible. The permittee shall submit a signed statement from the contractor that he has complied with the standards contained in this permit, unless the contract hauler has a separate sludge or biosolids use permit.
    g. Land Application Sites:
        i. Report the location of each application site, the annual and cumulative dry tons/acre for each site, and the landowners name and address. The location for each spreading site shall be given as a legal description for nearest ¼, ¼, Section, Township, Range, and county, or UTM coordinates. The facility shall report PAN when either of the following occurs: 1) When biosolids are greater than 50,000 mg/kg TN; or 2) when biosolids are land applied at an application rate greater than two dry tons per acre per year.
        ii. If the “Low Metals” criteria are exceeded, report the annual and cumulative pollutant loading rates in pounds per acre for each applicable pollutant, and report the percent of cumulative pollutant loading which has been reached at each site.
        iii. Report the method used for compliance with pathogen and vector attraction requirements.
        iv. Report soil test results for pH, CEC, and phosphorus. If none was tested during the year, report the last date when tested and results.

MISSOURI DEPARTMENT OF NATURAL RESOURCES
WATER PROTECTION PROGRAM, WATER POLLUTION CONTROL BRANCH

JUN 17 2013

FORM B2 – APPLICATION FOR CONSTRUCTION OR OPERATING PERMIT FOR FACILITIES WHICH RECEIVE PRIMARILY DOMESTIC WASTE AND HAVE A DESIGN FLOW MORE THAN 100,000 GALLONS PER DAY

WATER PROTECTION PROGRAM

FACILITY NAME	
LaGrange Waste Water Treatment Plant	
PERMIT NO.	COUNTY
MO-0041203	Lewis

APPLICATION OVERVIEW

Form B2 has been developed in a modular format and consists of Parts A, B and C and a Supplemental Application Information (Parts D, E, F and G) packet. All applicants must complete Parts A, B and C. Some applicants must also complete parts of the Supplemental Application Information packet. The following items explain which parts of Form B2 you must complete. Submittal of an incomplete application may result in the application being returned.

BASIC APPLICATION INFORMATION

A. Basic Application Information for all Applicants. All applicants must complete Part A.

B. Additional Application Information for all Applicants. All applicants must complete Part B.

C. Certification. All applicants must complete Part C.

SUPPLEMENTAL APPLICATION INFORMATION

D. Expanded Effluent Testing Data. A treatment works that discharges effluent to surface water of the United States and meets one or more of the following criteria must complete *Part D - Expanded Effluent Testing Data*:

1. Has a design flow rate greater than or equal to 1 million gallons per day.
2. Is required to have or currently has a pretreatment program.
3. Is otherwise required by the permitting authority to provide the information.

E. Toxicity Testing Data. A treatment works that meets one or more of the following criteria must complete *Part E - Toxicity Testing Data*:

1. Has a design flow rate greater than or equal to 1 million gallons per day.
2. Is required to have or currently has a pretreatment program.
3. Is otherwise required by the permitting authority to provide the information.

F. Industrial User Discharges and Resource Conservation and Recovery Act / Comprehensive Environmental Response, Compensation and Liability Act Wastes. A treatment works that accepts process wastewater from any significant industrial users, also known as SIUs, or receives a Resource Conservation and Recovery Act or CERCLA wastes must complete *Part F - Industrial User Discharges and Resource Conservation and Recovery Act /CERCLA Wastes*.

SIUs are defined as:

1. All Categorical Industrial Users, or CIUs, subject to Categorical Pretreatment Standards under 40 Code of Federal Regulations 403.6 and 40 Code of Federal Regulations 403.6 and 40 CFR Chapter 1, Subchapter N.
2. Any other industrial user that meets one or more of the following:
   - i. Discharges an average of 25,000 gallons per day or more of process wastewater to the treatment works (with certain exclusions).
   - ii. Contributes a process waste stream that makes up five percent or more of the average dry weather hydraulic or organic capacity of the treatment plant.
   - iii. Is designated as an SIU by the control authority.

G. Combined Sewer Systems. A treatment works that has a combined sewer system must complete *Part G - Combined Sewer Systems.*

ALL APPLICANTS MUST COMPLETE PARTS A, B and C

RECEIVED

MISSOURI DEPARTMENT OF NATURAL RESOURCES
WATER PROTECTION PROGRAM, WATER POLLUTION CONTROL BRANCH

JUN 17 2013

FORM B2 – APPLICATION FOR CONSTRUCTION OR OPERATING PERMIT FOR FACILITIES WHICH RECEIVE PRIMARILY DOMESTIC WASTE AND HAVE A DESIGN FLOW MORE THAN 100,000 GALLONS PER DAY

FOR AGENCY USE ONLY	
CHECK NUMBER	
DATE RECEIVED 6/17/13	FEE SUBMITTED 680

PART A – BASIC APPLICATION INFORMATION

1. This application is for:

- ☐ An operating permit and antidegradation review public notice.
- ☐ A construction permit following an appropriate operating permit and antidegradation review public notice.
- ☐ A construction permit, a concurrent operating permit and antidegradation review public notice.
- ☐ A construction permit (submitted before Aug. 30, 2008 or antidegradation review is not required).
- ☐ An operating permit for a new or unpermitted facility. Construction Permit # _____
- ☒ An operating permit renewal: Permit #MO- 0041203 Expiration Date January 8, 2014
- ☐ An operating permit modification: Permit #MO-_____ Reason: _____

1.1 Is this a Federal/State Funded Project? ☐ Yes ☑ No Funding Agency/Project #: _____

1.2 Is the appropriate fee included with the application (See instructions for appropriate fee)? ☑ Yes ☐ No

2. FACILITY

NAME		TELEPHONE NUMBER WITH AREA CODE	
LaGrange Waste Water Plant		573-655-0212	
ADDRESS (PHYSICAL)	CITY	STATE	ZIP
403 South Main	LaGrange	MO	63448

2.1 **LEGAL DESCRIPTION** (Plant Site): NW ¼, SW ¼, ¼, Sec. 31 , T 61 , R 5W County Lewis

2.2 UTM Coordinates Easting (X): +4002200 Northing (Y): -09129531
For Universal Transverse Mercator (UTM), Zone 15 North referenced to North American Datum 1983 (NAD83)

3. OWNER City of LaGrange

NAME	TITLE	TELEPHONE NUMBER WITH AREA CODE	
City of LaGrange		573-655-4301	
ADDRESS	CITY	STATE	ZIP
188 South Main	LaGrange	MO	63448

3.1 Request review of draft permit prior to Public Notice? ☑ Yes ☐ No

4. CONTINUING AUTHORITY: Permanent organization which will serve as the continuing authority for the operation, maintenance and modernization of the facility.

NAME		CITY	
City of LaGrange		LaGrange	
ADDRESS	CERTIFICATE NUMBER (IF APPLICABLE)	STATE	ZIP
118 South Main		MO	63448

5. OPERATOR

NAME	TITLE	TELEPHONE NUMBER WITH AREA CODE
Mike Henderson	Waste Water Supt.	573-655-0212

6. FACILITY CONTACT

NAME	TITLE
Mike Henderson	Waste Water Supt.

MO 780-1805 (09-08)

FACILITY NAME	PERMIT NO.	OUTFALL NO.
LaGrange Waste Water Plant	MO- 0041203	001

PART A – BASIC APPLICATION INFORMATION

7. ADDITIONAL FACILITY INFORMATION

7.1 BRIEF DESCRIPTION OF FACILITIES

Activated sludge treatment with anoxic and aerobic treatment zones/final clarifiers/ultraviolet disinfection/aerobic sludge digesters/ sludge dewatering belt press/Biosolids are taken to landfill or land applied/headworks with mechanical grit screen and grease removal

7.2 TOPOGRAPHIC MAP. ATTACH TO THIS APPLICATION A TOPOGRAPHIC MAP OF THE AREA EXTENDING AT LEAST ONE MILE BEYOND FACILITY PROPERTY BOUNDARIES. THIS MAP MUST SHOW THE OUTLINE OF THE FACILITY AND THE FOLLOWING INFORMATION. (YOU MAY SUBMIT MORE THAN ONE MAP IF ONE MAP DOES NOT SHOW THE ENTIRE AREA.)

a. The area surrounding the treatment plant, including all unit processes.
b. The location of the downstream landowner(s). (See Item 10.)
c. The major pipes or other structures through which wastewater enters the treatment works and the pipes or other structures through which treated wastewater is discharged from the treatment plant. Include outfalls from bypass piping, if applicable.
d. The actual point of discharge.
e. Wells, springs, other surface water bodies and drinking water wells that are: 1) within ¼ mile of the property boundaries of the treatment works, and 2) listed in public record or otherwise known to the applicant.
f. Any areas where the sewage sludge produced by the treatment works is stored, treated or disposed.
g. If the treatment works receives waste that is classified as hazardous under the Resource Conservation and Recovery Act, or RCRA, by truck, rail or special pipe, show on the map where that hazardous waste enters the treatment works and where it is treated, stored or disposed.

7.3 PROCESS FLOW DIAGRAM OR SCHEMATIC. PROVIDE A DIAGRAM SHOWING THE PROCESSES OF THE TREATMENT PLANT. ALSO, PROVIDE A WATER BALANCE SHOWING ALL TREATMENT UNITS, INCLUDING DISINFECTION (E.G. CHLORINATION AND DECHLORINATION). THE WATER BALANCE MUST SHOW DAILY AVERAGE FLOW RATES AT INFLUENT AND DISCHARGE POINTS AND APPROXIMATE DAILY FLOW RATES BETWEEN TREATMENT UNITS. INCLUDE A BRIEF NARRATIVE DESCRIPTION OF THE DIAGRAM.

7.4 FACILITY SIC CODE	DISCHARGE SIC CODE:	FACILITY NAICS CODE:	DISCHARGE NAICS CODE:
4952 .	4952 .	.	.

7.5 NUMBER OF SEPARATE DISCHARGE POINTS
0

7.6 NUMBER OF PEOPLE PRESENTLY CONNECTED OR POPULATION EQUIVALENT	DESIGN POPULATION EQUIVILENT
930	3000

NUMBER OF UNITS PRESENTLY CONNECTED
HOMES 327 APARTMENTS 3 TRAILERS 0 OTHER 12

TOTAL DESIGN FLOW (ALL OUTFALLS)	ACTUAL FLOW
300,000	100,000

7.7 DOES ANY BYPASSING OCCUR ANYWHERE IN THE COLLECTION SYSTEM OR AT THE TREATMENT FACILITY?
Yes ■ No ☐ (If Yes, attach an explanation.)

7.8 LENGTH OF THE SANITARY SEWER COLLECTION SYSTEM IN MILES
7.6

7.9 IS INDUSTRIAL WASTE DISCHARGED TO THE FACILITY IDENTIFIED IN ITEM 2? Yes ☐ No ☑

7.10 WILL THE DISCHARGE BE CONTINUOUS THROUGH THE YEAR? Yes ☑ No ☐

A. DISCHARGE WILL OCCUR DURING THE FOLLOWING MONTHS	B. HOW MANY DAYS OF THE WEEK WILL THE DISCHARGE OCCUR?
All 12	7 days a week

7.11 IS WASTEWATER LAND APPLIED? (If Yes, Attach Form I)	7.12 DOES THIS FACILITY DISCHARGE TO A LOSING STREAM OR SINKHOLE?
Yes ☐ No ☑	Yes ☐ No ☑

7.13 HAS A WASTE LOAD ALLOCATION STUDY BEEN COMPLETED FOR THIS FACILITY?
Yes ☐ No ☑

7.14 LIST ALL PERMIT VIOLATIONS, INCLUDING EFFLUENT LIMIT EXCEEDANCES IN THE LAST FIVE YEARS.
ATTACH A SEPARATE SHEET IF NECESSARY. IF NONE, WRITE NONE.

8. LABORATORY CONTROL INFORMATION

8.1 LABORATORY WORK CONDUCTED BY PLANT PERSONNEL

Lab work conducted outside of plant.	Yes ☑	No ☐
Push–button or visual methods for simple test such as pH, settleable solids.	Yes ☑	No ☐
Additional procedures such as Dissolved Oxygen, Chemical Oxygen Demand, Biological Oxygen Demand, titrations, solids, volatile content.	Yes ☑	No ☐
More advanced determinations such as BOD seeding procedures, fecal coliform, nutrients, total oils, phenols, etc.	Yes ☑	No ☐
Highly sophisticated instrumentation, such as atomic absorption and gas chromatograph.	Yes ☐	No ☑

FACILITY NAME	PERMIT NO.	OUTFALL NO.
LaGrange Waste Water Plant	MO- 0041203	001

PART A – BASIC APPLICATION INFORMATION

9. SLUDGE HANDLING, USE AND DISPOSAL

9.1 IS THE SLUDGE A HAZARDOUS WASTE AS DEFINED BY 10 CSR 25?
Yes ☐ No ☑

9.2 SLUDGE PRODUCTION, INCLUDING SLUDGE RECEIVED ROM OTHERS
Design Dry Tons/Year 89.4 Actual Dry Tons/Year 17.388

9.3 CAPACITY OF SLUDGE HOLDING STRUCTURES

9.4 SLUDGE STORAGE PROVIDED
Cubic Feet 9075.31 Days of Storage 25 Average Percent Solids of Sludge 1.8 ☐ No Sludge Storage is Provided

9.5 TYPE OF STORAGE
☐ Holding Tank ☑ Basin ☐ Building ☐ Concrete Pad ☐ Other (Describe) _____

9.6 SLUDGE TREATMENT
☐ Anaerobic Digester ☐ Storage Tank ☐ Lime Stabilization ☐ Lagoon
☑ Aerobic Digester ☐ Air or Heat Drying ☐ Composting ☐ Other (Attach Description)

9.7 SLUDGE USE OR DISPOSAL
☐ Land Application ☐ Contract Hauler ☐ Hauled to Another Treatment Facility ☑ Solid Waste Landfill
☐ Surface Disposal (Sludge Disposal Lagoon, Sludge Held For More Than Two Years) ☐ Incineration
☐ Other (Attach Explanation Sheet) _____

9.8 PERSON RESPONSIBLE FOR HAULING SLUDGE TO DISPOSAL FACILITY

NAME			
Republic Services Inc. (Quincy Office)			
ADDRESS	CITY	STATE	ZIP
310 Koch's Lane	Quincy	IL	62301
CONTACT PERSON	TELEPHONE NUMBER WITH AREA CODE	PERMIT NO	
Bill Romans	217-223-4100	MO- 111106	

9.9 SLUDGE USE OR DISPOSAL FACILITY
☐ By Applicant ☑ By Others (Complete Below)

NAME			
Republic Services Inc. (Land Fill)			
ADDRESS	CITY	STATE	ZIP
26265 State Hwy B	LaGrange	MO	63448
CONTACT PERSON	TELEPHONE NUMBER WITH AREA CODE	PERMIT NO	
Mike Schmitt	573-655-4240	MO- 111106	

9.10 DO THE SLUDGE OR BIOSOLIDS DISPOSAL COMPLY WITH FEDERAL SLUDGE REGULATIONS UNDER 40 CFR 503?
■ Yes ☐ No (Attach Explanation)

10. DOWNSTREAM LANDOWNER(S). (ATTACH ADDITIONAL SHEETS AS NECESSARY.)

NAME			
Barbara Robbins (owns river camps south of plant)			
ADDRESS	CITY	STATE	ZIP
2415 Brooktree Lane	Dallas	TX	75287

11. DRINKING WATER SUPPLY INFORMATION

11.1 SOURCE OF YOUR DRINKING WATER SUPPLY

A. PUBLIC SUPPLY (MUNICIPAL OR WATER DISTRICT WATER) (IF PUBLIC, PLEASE GIVE NAME OF PUBLIC SUPPLY)
City of LaGrange

B. PRIVATE WELL
City of LaGrange

C. SURFACE WATER (LAKE, POND OR STREAM)
N/A

11.2 DOES YOUR DRINKING WATER SOURCE SERVE AT LEAST 25 PEOPLE AT LEAST 60 DAYS PER YEAR (NOT NECESSARILY CONSECUTIVE DAYS)? Yes ☑ No ☐

11.3 DOES YOUR SPPLY SERVE HOUSING THAT IS OCCUPIED YEAR ROUND BY THE SAME PEOPLE? THIS DOES NOT INCLUDE HOUSING THAT IS OCCUPIED SEASONALLY? Yes ☑ No ☐

END OF PART A

MO 780-1805 (09-08)

MAKE ADDITIONAL COPIES OF THIS FORM FOR EACH OUTFALL

FACILITY NAME	PERMIT NO.	OUTFALL NO.
LaGrange Waste Water Plant	MO- 0041203	001

PART B – ADDITIONAL APPLICATION INFORMATION

20. INFLOW AND INFILTRATION

ESTIMATE THE AVERAGE NUMBER OF GALLONS PER DAY THAT FLOW INTO THE TREATMENT WORKS FROM INFLOW AND INFILTRATION.

Gallons Per Day 20,000

BRIEFLY EXPLAIN ANY STEPS UNDERWAY OR PLANNED TO MINIMIZE INFLOW AND INFILTRATION.

We are on 3rd year of our 8 year plan to Line, Replace and Repair Sewer Mains and Manholes

20.1 OPERATION AND MAINTENANCE PERFORMED BY CONTRACTOR(S)

ARE ANY OPERATIONAL OR MAINTENANCE ASPECTS (RELATED TO WASTEWATER TREATMENT AND EFFLUENT QUALITY) OF THE TREATMENT WORKS THE RESPONSIBILITY OF A CONTRACTOR?

Yes ☐ No ☑ If Yes, list the name, address, telephone number and status of each contractor and describe the contractor's responsibilities. (Attach additional pages if necessary.)

NAME

MAILING ADDRESS

TELEPHONE NUMBER WITH AREA CODE

RESPONSIBILITIES OF CONTRACTOR

20.2 SCHEDULED IMPROVEMENTS AND SCHEDULES OF IMPLEMENTATION. PROVIDE INFORMATION ABOUT ANY UNCOMPLETED IMPLEMENTATION SCHEDULE OR UNCOMPLETED PLANS FOR IMPROVEMENTS THAT WILL AFFECT THE WASTEWATER TREATMENT, EFFLUENT QUALITY OR DESIGN CAPACITY OF THE TREATMENT WORKS. IF THE TREATMENT WORKS HAS SEVERAL DIFFERENT IMPLEMENTATION SCHEDULES OR IS PLANNING SEVERAL IMPROVEMENTS, SUBMIT SEPARATE RESPONSES FOR EACH. (IF NONE, GO TO QUESTION B-20.3.)

A. List the outfall number that is covered by this implementation schedule	B. Indicate whether the planned improvements or implementation schedule are required by local, state or federal agencies.
Outfall No. N/A	Yes ☐ No ☑

20.3 WASTEWATER DISCHARGES:

COMPLETE QUESTIONS 20.4 THROUGH 20.7 ONCE FOR EACH OUTFALL (INCLUDING BYPASS POINTS) THROUGH WHICH EFFLUENT IS DISCHARGED. DO NOT INCLUDE INFORMATION ON COMBINED SEWER OVERFLOWS IN THIS SECTION.

20.4 DESCRIPTION OF OUTFALL

OUTFALL NUMBER **001**

A. LOCATION

¼ NW ¼ SW ¼ ___ Section 31 Township 61N Range 5W ☐ E ☑ W

UTM Coordinates Easting (X): 31 Northing (Y): 61

For Universal Transverse Mercator (UTM), Zone 15 North referenced to North American Datum 1983 (NAD83)

B. Distance from Shore (If Applicable)	C. Depth Below Surface (If Applicable)	D. Average Daily Flow Rate
5 ft.	N/A ft.	.150 mgd

E. Does this outfall have either an intermittent or periodic discharge?

☐ Yes ☑ No If Yes, Provide the following information:

Number of Days Per Year Discharge Occurs:	Average Duration of Each Discharge:	Average Flow Per Discharge: mgd	Months in Which Discharge Occurs:

Is Outfall Equipped with a Diffuser? ☐ Yes ■ No

20.5 DESCRIPTION OF RECEIVING WATER

B. Name of Receiving Water

Mississippi River

B. Name of Watershed (If Known)	U.S. Soil Conservation Service 14-Digit Watershed Code (If Known)
	07110001-230001
B. Name of State Management/River Basin (If Known)	U.S. Geological Survey 8-Digit Hydrologic Cataloging Unit Code (If Known)
B. Critical Flow of Receiving Stream (If Applicable) Acute n/a cfs Chronic n/a cfs	B. Total Hardness of Receiving Stream at Critical Low Flow (If Applicable) mg/L of $CaCO_3$ n/a

MO 780-1805 (09-08)

FACILITY NAME	PERMIT NO.	OUTFALL NO.
LaGrange Waste Water Plant	MO- 0041203	001

PART B – ADDITIONAL APPLICATION INFORMATION (CONTINUED)

20.6 DESCRIPTION OF TREATMENT

A. WHAT LEVELS OF TREATMENT ARE PROVIDED? Check All That Apply

☐ Primary ☑ Secondary ☐ Advanced ☐ Other (Describe)

B. INDICATE THE FOLLOWING REMOVAL RATES (AS APPLICABLE)

Design BOD_5 Removal Or Design $CBOD_5$ Removal 90 % Design SS Removal 90 %

Design P Removal N/A % Design N Removal 90 % Other N/A N/A %

C. What type of disinfection is used for the effluent from this outfall? If disinfection varies by season, please describe:

We use UV from Ozonia. From April 1 to October 31.

If disinfection is by chlorination, is dechlorination used for this outfall? ☐ Yes ■ No

Does the treatment plant have post aeration? ☐ Yes ■ No

20.7 EFFLUENT TESTING DATA. ALL APPLICANTS THAT DISCHARGE TO WATERS OF THE U.S. MUST PROVIDE EFFLUENT TESTING DATA FOR THE FOLLOWING PARAMETERS. PROVIDE THE INDICATED EFFLUENT DATA **FOR EACH OUTFALL THROUGH WHICH EFFLUENT IS DISCHARGED**. DO NOT INCLUDE INFORMATION OF COMBINED SEWER OVERFLOWS IN THIS SECTION. ALL INFORMATION REPORTED MUST BE BASED ON DATA COLLECTED THROUGH ANALYSIS CONDUCTED USING 40 CFR PART 136 METHODS. IN ADDITION, THIS DATA MUST COMPLY WITH QA/QC REQUIREMENTS OF 40 CFR PART 136 AND OTHER APPROPRIATE QA/QC REQUIREMENTS FOR STANDARD METHODS FOR ANALYTES NOT ADDRESSED BY 40 CFR PART 136.

OUTFALL NUMBER

PARAMETER	MAXIMUM DAILY VALUE		AVERAGE DAILY VALUE		
	VALUE	UNITS	VALUE	UNITS	NO. OF SAMPLES
pH (Minimum)	6.5	S.U.		S.U.	1152
pH (Maximum)	8.55	S.U.		S.U.	1152
FLOW RATE	1.0353	MGD	.2212	MGD	1612
TEMPERATURE (Winter)	17.9	°C	12.55	°C	497
TEMPERATURE (Summer)	27.2	°C	19.93	°C	655

*For pH report a minimum and a maximum daily value.

POLLUTANT		MAXIMUM DAILY DISCHARGE		AVERAGE DAILY DISCHARGE			ANALYTICAL METHOD	ML/MDL
		CONC.	UNITS	CONC.	UNITS	NO. OF SAMPLES		
Conventional and Nonconventional Compounds								
BIOCHEMICAL OXYGEN DEMAND (Report One)	BOD_5	3.22	mg/L	1.76	mg/L	53	SM 5210B	
	$CBOD_5$	N/A	mg/L		mg/L			
FECAL COLIFORM		40	#/100 mL	15.67	#/100 mL	53	SM 9222D	1
TOTAL SUSPENDED SOLIDS (TSS)		4	mg/L	1.72	mg/L	53	SM 2540D	
AMMONIA (AS N)		2.01	mg/L	.201	mg/L	53	EPA 350.2	.05
CHLORINE (TOTAL RESIDUAL, TRC)		N/A	mg/L		mg/L			
DISSOLVED OXYGEN		N/A	mg/L		mg/L			
TOTAL KJELDAHL NITROGEN (TKN)		N/A	mg/L		mg/L			
NITRATE PLUS NITRITE NITROGEN		N/A	mg/L		mg/L			
OIL AND GREASE		3.4	mg/L	1.83	mg/L	53	EPA 1664	5
PHOSPHORUS (TOTAL)		N/A	mg/L		mg/L			
TOTAL DISSOLVE SOLIDS (TDS)		N/A	mg/L		mg/L			
OTHER		N/A	mg/L		mg/L			

END OF PART B

MO 780-1805 (09-08)

PART C - CERTIFICATION

30. CERTIFICATION

All applicants must complete the Certification Section. This certification must be signed by an officer of the company or city official. All applicants must complete all applicable sections as explained in the Application Overview. By signing this certification statement, applicants confirm that they have reviewed the entire form and have completed all sections that apply to the facility for which this application is submitted.

ALL APPLICANTS MUST COMPLETE THE FOLLOWING CERTIFICATION.

I certify under penalty of law that this document and all attachments were prepared under my direction or supervision in accordance with a system designed to assure that qualified personnel properly gather and evaluate the information submitted. Based on my inquiry of the person or persons who manage the system or those persons directly responsible for gathering the information, the information is, to the best of my knowledge and belief, true, accurate and complete. I am aware that there are significant penalties for submitting false information, including the possibility of fine and imprisonment for knowing violations.

PRINTED NAME AND OFFICIAL TITLE (MUST BE AN OFFICER OF THE COMPANY OR CITY OFFICIAL)

Ronald L. Powers MAYOR

SIGNATURE

Ronald L. Powers

TELEPHONE NUMBER WITH AREA CODE

573-655-4301

DATE SIGNED

6/12/2013

Upon request of the permitting authority, you must submit any other information necessary to assess wastewater treatment practices at the treatment works or identify appropriate permitting requirements.

For Design Flows Less than 1 Million Gallons Per Day, Send Completed Form to:	For Design Flows of 1 Million Gallons Per Day or Greater, Send Completed Form to:
Appropriate Regional Office Map of regional offices with addresses and phone numbers is available on the Web at www.dnr.mo.gov/regions/ro-map.pdf.	Department of Natural Resources Water Protection Program ATTN: NPDES Permits and Engineering Section P.O. Box 176 Jefferson City, MO 65102

END OF PART C.
REFER TO THE APPLICATION OVERVIEW TO DETERMINE WHICH OTHER PARTS OF FORM B2 YOU MUST COMPLETE.

Do not complete the remainder of this application, unless:

1. Your facility design flow is equal to or greater than 1,000,000 gallons per day.
2. Your facility is a pretreatment treatment works.
3. Your facility is a combined sewer system.

Submittal of an incomplete application may result in the application being returned. Permit fees for returned applications shall be forfeited. Permit fees for applications being processed by the department that are withdrawn by the applicant shall be forfeited.

MAKE ADDITIONAL COPIES OF THIS FORM FOR EACH OUTFALL.		
FACILITY NAME LaGrange Waste Water Plant	PERMIT NO. MO- 0041203	OUTFALL NO. 001

PART E – TOXICITY TESTING DATA

50. TOXICITY TESTING DATA

Refer to the Supplemental Application Information to determine whether Part E applies to the treatment works.

Publicly owned treatment works, or POTWS, meeting one or more of the following criteria must provide the results of whole effluent toxicity tests for acute or chronic toxicity for each of the facility's discharge points.

A. POTWs with a design flow rate greater than or equal to 1 million gallons per day.

B. POTWs with a pretreatment program (or those that are required to have one under 40 CFR Part 403).

C. POTWs required by the permitting authority to submit data for these parameters

- At a minimum, these results must include quarterly testing for a 12-month period within the past one year using multiple species (minimum of two species), or the results from four tests performed at least annually in the four and one-half years prior to the application, provided the results show no appreciable toxicity, and testing for acute or chronic toxicity, depending on the range of receiving water dilution. Do not include information about combined sewer overflows in this section. All information reported must be based on data collected through analysis conducted using 40 CFR Part 136 methods. In addition, this data must comply with QA/QC requirements of 40 CFR Part 136 and other appropriate QA/QC requirements for standard methods for analytes not addressed by 40 CFR Part 136.
- If EPA methods were not used, report the reason for using alternative methods. If test summaries are available that contain all of the information requested below, they may be submitted in place of Part E. If no biomonitoring data is required, do not complete Part E. Refer to the application overview for directions on which other sections of the form to complete.

50.1 REQUIRED TESTS. INDICATE THE NUMBER OF WHOLE EFFLUENT TOXICITY TESTS CONDUCTED IN THE PAST FOUR AND ONE-HALF YEARS.

CHRONIC	ACUTE 4

INDIVIDUAL TEST DATA. Complete the following chart **for the last three whole effluent toxicity tests.** Allow one column per test (where each species constitutes a test). Copy this page if more than three tests are being reported.

	MOST RECENT	2ND MOST RECENT	3RD MOST RECENT
A. TEST INFORMATION			
TEST NUMBER	MO_1501709	MO_1314125	MO_1208024
TEST SPECIES AND TEST METHOD NUMBER	C. Dubia / P. Promelas	C. Dubia / P. Promelas	C. Dubia / P. Promelas
AGE AT INITIATION OF TEST	<24 Hrs / 7 Days	<24 Hrs / 10 Days	<24 Hrs / 6 Days
OUTFALL NUMBER	001	001	001
DATES SAMPLE COLLECTED	07/24/2012	07/26/2011	07/27/2010
DATE TEST STARTED	07/25/2012 11:00 Hrs	07/27/2011 11:00 Hrs	07/28/2010 11: Hrs
DURATION	48 Hrs	48	
B. GIVE TOXICITY TEST METHODS FOLLOWED			
MANUAL TITLE	US EPA 600/4-90/027	US EPA 600/4-90/027	US EPA 600/4-90/027
EDITION NUMBER AND YEAR OF PUBLICATION	Fifth Edition 10/2002	Fifth Edition 10/2002	Fifth Edition 10/2002
PAGE NUMBER(S)			
C. GIVE THE SAMPLE COLLECTION METHOD(S) USED. FOR MULTIPLE GRAB SAMPLES, INDICATE THE NUMBER OF GRAB SAMPLES USED.			
24-HOUR COMPOSITE	1	1	1
GRAB			
D. INDICATE WHERE THE SAMPLE WAS TAKEN IN RELATION TO DISINFECTION. (CHECK ALL THAT APPLY FOR EACH)			
BEFORE DISINFECTION	☐	☐	☐
AFTER DISINFECTION	☑	☑	☑
AFTER DECHLORINATION	☐	☐	☐
E. DESCRIBE THE POINT IN THE TREATMENT PROCESS AT WHICH THE SAMPLE WAS COLLECTED			
SAMPLE WAS COLLECTED	By the wier past the UV	By the wier past the UV	By the wier past the UV
F. FOR EACH TEST, INCLUDE WHETHER THE TEST WAS INTENDED TO ASSESS CHRONIC TOXICITY, ACUTE TOXICITY OR BOTH.			
CHRONIC TOXICITY	☐	☐	☐
ACUTE TOXICITY	☑	☑	☑
G. PROVIDE THE TYPE OF TEST PERFORMED			
STATIC	☑	☑	☑
STATIC STATIC-RENEWAL	☐	☐	☐
FLOW-THROUGH	☐	☐	☐
H. SOURCE OF DILUTION WATER. IF LABORATORY WATER, SPECIFY TYPE; IF RECEIVING WATER, SPECIFY SOURCE			
LABORATORY WATER			
RECEIVING WATER	Mississippi River	Mississippi River	Mississippi River

MO 780-1805 (09-08)

FACILITY NAME	PERMIT NO.	OUTFALL NO.
LaGrange Waste Water Plant	MO- 0041203	001

PART E – TOXICITY TESTING DATA (CONTINUED)

50.1 WHOLE EFFLUENT TOXICITY TESTS DATA (CONTINUED)

	MOST RECENT	2ND MOST RECENT	3RD MOST RECENT
I. TYPE OF DILUTION WATER, IF SALT WATER, SPECIFY "NATURAL" OR TYPE OF ARTIFICIAL SEA SALTS OR BRINE USED.			
FRESH WATER	Yes	Yes	Yes
SALT WATER			
J. GIVE THE PERCENTAGE EFFLUENT USED FOR ALL CONCENTRATIONS IN THE TEST SERIES.			
	9.1%	9.1%	9.1%
K. PARAMETERS MEASURED DURING THE TEST. (STATE WHETHER PARAMETER MEETS TEST METHOD SPECIFICATIONS)			
pH	Yes	Yes	Yes
SALINITY	N/A	N/A	N/A
TEMPERATURE	Yes	Yes	Yes
AMMONIA	Yes	Yes	Yes
DISSOLVED OXYGEN	Yes	Yes	Yes
L. TEST RESULTS			
ACUTE:			
PERCENT IN SURVIVAL IN 100% EFFLUENT	N/A	N/A	N/A
LC_{50}	N/A	N/A	N/A
95% C.I.	N/A	N/A	N/A
CONTROL PERCENT SURVIVAL	N/A	N/A	N/A
OTHER (DESCRIBE)	100% Survival at 9.1% Effl	100% Survival at 9.1% Effl	100% Survival at 9.1% Effl
CHRONIC: N/A			
NOEC	N/A		
IC_{25}	N/A		
CONTROL PERCENT SURVIVAL	N/A		
OTHER (DESCRIBE)	N/A		
M. QUALITY CONTROL ASSURANCE			
IS REFERENCE TOXICANT DATA AVAILABLE?	Yes	Yes	Yes
WAS REFERENCE TOXICANT TEST WITHIN ACCEPTABLE BOUNDS?	Yes	Yes	Yes
WHAT DATE WAS REFERENCED TOXICANT TEST RUN (MM/DD/YYYY)?	07/11/2012	07/06/2011	07/07/2010
OTHER (DESCRIBE)	N/A	N/A	N/A

50.2 TOXICITY REDUCTION EVALUATION

Is the treatment works involved in a toxicity reduction evaluation? ☐ Yes ☑ No

If yes, describe:

50.3 SUMMARY OF SUBMITTED BIOMONITORING TEST INFORMATION

If you have submitted biomonitoring test information, or information regarding the cause of toxicity, within the past four and one-half years, provide the dates the information was submitted to the permitting authority and a summary of the results.

Date Submitted (MM/DD/YYYY)

Summary of Results (See Instructions)

END OF PART E

REFER TO THE APPLICATION OVERVIEW TO DETERMINE WHICH OTHER PARTS OF FORM B2 YOU MUST COMPLETE.

MO 780-1805 (09-08)

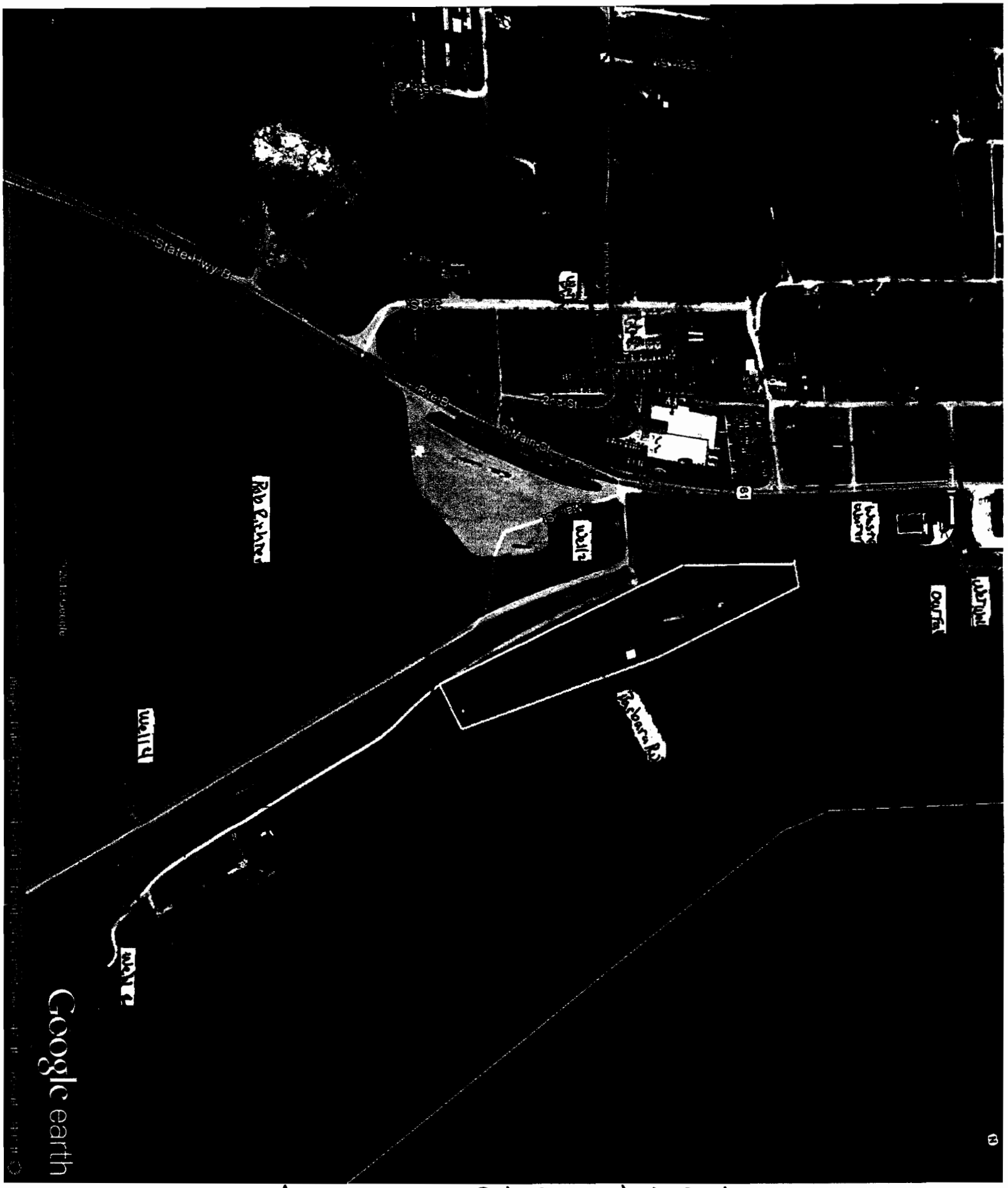
Google earth
State Hwy B
Rte B
S Main St
Bob Richter
Barbara Robbins
Barbara Rd
Water
Water
Water

LAGRANGE WWTP
PROCESS FLOW DIAGRAM

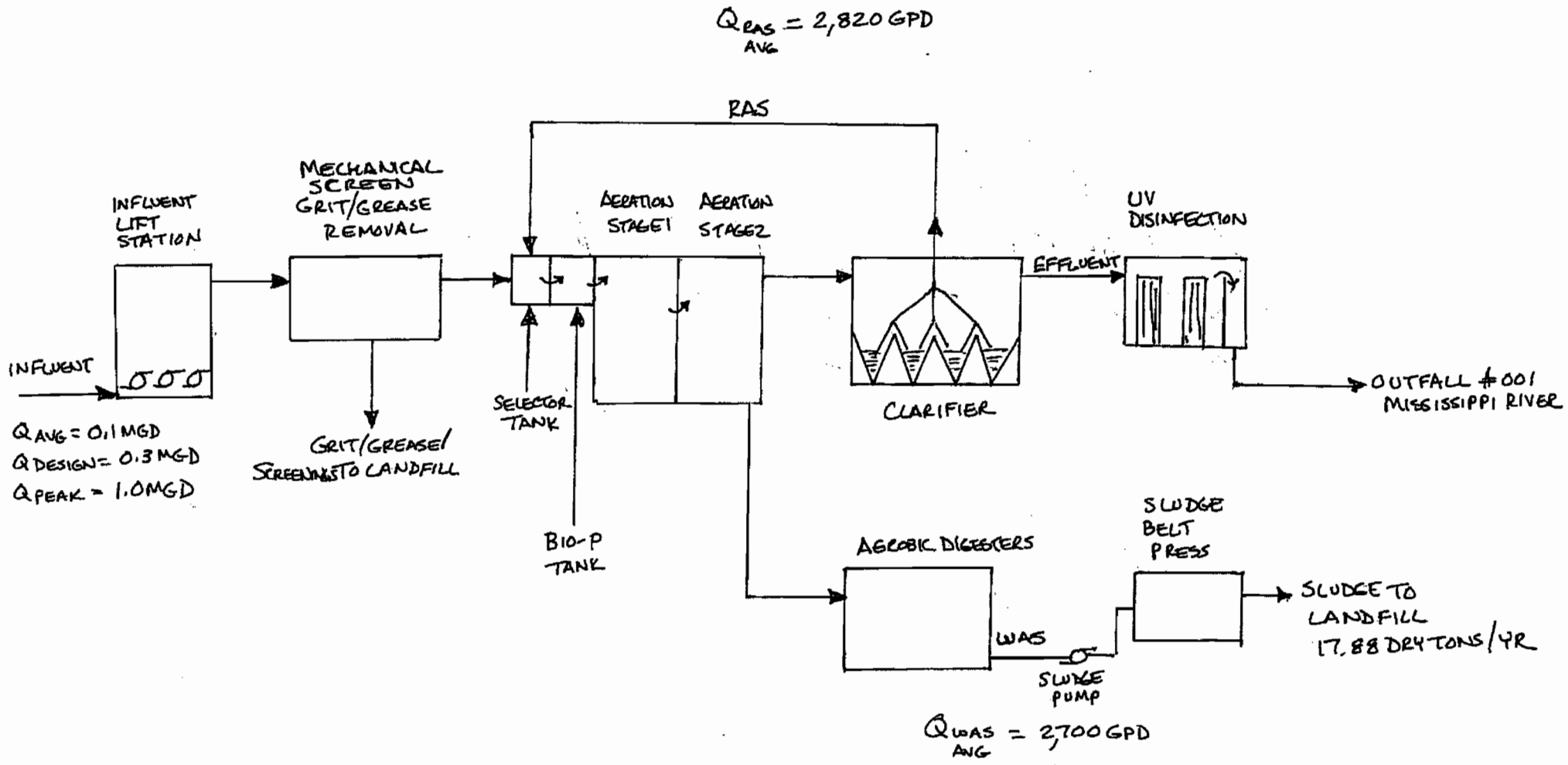

CITY OF LAGRANGE WWTP PROCESS DESCRIPTION

The City of LaGrange operates an extended aeration activated sludge wastewater treatment plant (WWTP). The following are current flow parameters:

Qaverage = 0.1 MGD

Qdesign = 0.3 MGD

Qpeak = 1.0 MGD

Qras = 2,820 GPD (design average return activated sludge)

Qwas = 2,700 GPD (design average waste activated sludge)

Raw sewage enters the influent lift station and is pumped through 3-350 GPM submersible pumps to the above ground stainless steel mechanical screen/grit/grease removal chamber. Typically, only 2 pumps of the influent lift station would operate at any one time. The grit/grease removal chamber is housed inside a building. Prior to entry, raw sewage flows are measured through a magnetic flow meter. In the mechanical screen/grit/grease removal chamber, grease is allowed to rise and is then scraped off of the top of the water level and discharged into a barrel through a bagging system. Screenings are collected on the perforated screen and compacted and washed before discharging into a barrel through a bagging system. Grit settles out and then is lifted by auger and washed before discharging into a barrel through a bagging system. All grit and grease are disposed of at the local landfill.

From the mechanical screen/grit/grease removal chamber, flow goes by gravity into the main treatment basins. They initially enter the selector tank, which serves as a collection point for raw sewage and returned activated sludge from the clarifiers. Flow goes by gravity into the biological phosphorus removal basin. This basin has a low RPM constant speed mixer that stirs the wastewater and allows some biological removal of phosphorus. Flow continues by gravity into the Stage 1 Aeration basins. These basins introduce oxygen into the treatment process through coarse bubble diffusers. Flow continues by gravity into the Stage 2 Aeration basins. These basins also continue feeding oxygen in the treatment process and serve as a discharge point to the clarifier. Stage 1 and Stage 2 Aeration basin air is provided by two large blowers that are controlled by variable frequency drives and timers. The timers control the Stage 1 air, the Stage 2 air, the return activated sludge from the clarifier to the selector tank and the air in the Aerobic Digesters. The Stage 1 and Stage 2 air is varied on and off to create anoxic zones to allow for ammonia removal. From Stage 2 Aeration, a portion of the mixed liquor goes to the Aerobic digesters and a portion goes to the clarifiers.

Flow that goes to the clarifiers is separated in the clarifiers to clear effluent and settled sludge. Settled sludge is air lifted and returned to the selector tank through means of a timer. The time of return and how often sludge is returned can be adjusted by the timer. Clear effluent from the clarifiers is collected and flows by gravity to the UV disinfection channel and then on to Outfall #001.

Flow that goes to the aerobic digesters is aerated and then allowed to settle. This process continues as the sludge is thickened to 2-3% solids. The aeration is controlled by a timer that can vary the amount of time for aeration and how often aeration occurs. Sludge is withdrawn by gravity from the aerobic digesters to a sludge wetwell. Sludge is pumped from this wetwell, mixed with polymer and pumped through the sludge belt press and is dewatered to approximately 14-16% solids. This dewatered sludge is hauled to a nearby landfill.

7.7 DOES ANY BYPASSING OCCUR ANYWHERE IN THE COLLECTION SYSTEM OR AT THE TREATMENT FACILITY? Yes

There are 3 Manholes in town that have overflowed in the past. They are located at Main and Knox, Main and Jefferson, and Main and Jackson. The factors that cause these to overflow are heavy rains combine with the Mississippi River flooding covering the Manholes next to the River.

The last is a bypass at the Waste Water Plant. Heavy Rains and River flooding causes me to have to shut down the UV because when I shut the gate in the UV room to submerge the UV I lose the 5 inches of free board in the plant. Heavy Rains and River flooding causes the water to back up too high in the plant. This causes the Digester and Mixed Liquor to mix.

We are currently in our 3rd year in our 8 year plan of Lining, repairing and replacing our Sewer Lines and Manholes to stop inflow and infiltration. The Bid for this year has been awarded for around $330,000 dollars. With the completion of this year's project we well have about 4 years done on the plan.

Environmental Analysis South, Inc.
4000 East Jackson Blvd. · Jackson, MO 63755 · 573-204-8817 · Fax 573-204-8818

REPORT OF ACUTE TOXICITY TESTING
LaGrange Wastewater Treatment Plant
OUTFALL 001 (24 hr composite) AEC = 9.1%
MO-0041203
EAS LOG# 1501709
July 25, 2012 through July 27, 2012

Tests performed by:
John P. Clippard / Chemical Analyst at Environmental Analysis South (EAS)
Kelly J. Ray / Biologist at Environmental Analysis South (EAS)
Sara C. Shields / Lab Supervisor - Chemist at Environmental Analysis South (EAS)
David F. Warren / Lab Director - Chemist at Environmental Analysis South (EAS)

1. **Report Summation**
   1.1. **Data Summation**
   1.2. **Conclusion**
2. **Method Summation**
   2.1. **Test Conditions and Methods**
   2.2. **Potassium chloride Reference Salt Test**
      2.2.1. ***Pimephales promelas* data**
      2.2.2. ***Ceriodaphnia dubia* data**
   2.3. **Literature Cited**
3. **Raw Data Bench Sheets**
   3.1. **Initial observations (page 1)**
   3.2. **Zero hour Observations (page 1)**
   3.3. **Twenty-four (24) hour Observations (page 1)**
   3.4. **Forty-eight (48) hour Observations (page 1)**
   3.5. **Survival Data Table (page 2)**
   3.6. **Test Comments (page 3)**
4. **Chain of Custody**
5. **MO DNR "Whole Effluent Toxicity (WET) Test Report (Form 780-1899)**

Environmental Analysis South, Inc.
4000 East Jackson Blvd. · Jackson, MO 63755 · 573-204-8817 · Fax 573-204-8818

REPORT OF ACUTE TOXICITY TESTING
LaGrange Wastewater Treatment Plant
OUTFALL 001 (24 hr composite) AEC = 9.1%
MO-0041203
EAS LOG# 1501709
July 25, 2012 through July 27, 2012

1. REPORT SUMMATION:

1.1. Single Dilution Data Summation

	Pimephales promelas Acute Toxicity Test	*Ceriodaphnia dubia* Acute Toxicity Test
Survival in the Effluent at 48 Hours	100%	100%
Survival in the Reconstituted Control (RC) at 48 Hours	100%	100%
Survival in the Upstream Control (UC) at 48 Hours	100%	100%
Statistical Results Comparing the Survival Data of the Effluent with the Control (arc sine square root transformation)	No Significant Difference at alpha = 0.05 **PASS**	No Significant Difference at alpha = 0.05 **PASS**

* Indicates a significant difference at alpha = 0.5 between effluent and control survival data.

Conclusion: The mortality observed with both species was determined not to be significantly different than that observed in the control sample. Based on these results the outfall **passed** the whole effluent toxicity test with both indicator species.

Approved by _____
Sara C. Shields, Chemist

Environmental Analysis South, Inc.
4000 East Jackson Blvd. • Jackson, MO 63755 • 573-204-8817 • Fax 573-204-8818

REPORT OF ACUTE TOXICITY TESTING
LaGrange Wastewater Treatment Plant
OUTFALL 001 (24 hr composite) AEC = 9.1%
MO-0041203
EAS LOG# 1501709
July 25, 2012 through July 27, 2012

2. TEST METHOD SUMMARY

2.1. TEST CONDITIONS AND METHODS:

	Ceriodaphnia dubia:	*Pimephales promelas:*
Test duration:	48 hours	48 hours
Temperature:	24 - 26 degree Celsius	24 - 26 degree Celsius
Light quality:	Ambient laboratory illumination	Ambient laboratory illumination
Photoperiod:	16 hour light, 8 hours dark	16 hour light, 8 hours dark
Control Water:	Moderately Hard Reconstituted Water	Moderately Hard Reconstituted Water
Dilution Water:	Upstream Water - If unavailable or toxic, then control water will be used.	Upstream Water - If unavailable or toxic, then control water will be used.
Size of test vessel:	30 milliliters	250 milliliters
Volume of test solution:	15 milliliters	200 milliliters
Age of test organisms:	<24 hours	1 -14 days (all same age)
Number of organisms/test vessel:	5	10
Number of replicates/concentration:	4	4
Number of organisms/concentration:	20	40 for a single dilution test and 20 for a multiple dilution test
Feeding regime:	None (fed prior to test)	None (fed prior to test)
Aeration:	None	None
Test acceptability criterion:	90% or greater survival in controls	90% or greater survival in controls

The methodology used for the chemistry data was taken from the *Standard Methods for the Examination of Water and Wastewater*, 18th edition (1992). The exception was hardness, which was determined using a Hach EDTA titration test kit. The toxicity tests follow guidelines laid out in the permittee's NPDES permit and were conducted according to EPA approved methods (USEPA 2002).

All test organisms were cultured according to EPA approved methods (USEPA 2002). The *Ceriodaphnia dubia* and the *Pimephales promelas* were obtained from C-K Associates Inc. located in Baton Rouge, Louisiana and shipped overnight for use in the whole effluent toxicity test.

Environmental Analysis South, Inc.
4000 East Jackson Blvd. · Jackson, MO 63755 · 573-204-8817 · Fax 573-204-8818

REPORT OF ACUTE TOXICITY TESTING
LaGrange Wastewater Treatment Plant
OUTFALL 001 (24 hr composite) AEC = 9.1%
MO-0041203
EAS LOG# 1501709
July 25, 2012 through July 27, 2012

2.2. REFERENCE TOXICITY TEST:

Environmental Analysis South performs monthly reference toxicity tests. The most recent reference test was initiated on July 11, 2012 using KCL Lot #41713. Following are the results:

2.2.1. ***P. promelas*** - 48 hr. Acute Test – LC_{50} = 0.900 g/l 95%CI (0.710 g/l -1.089 g/l)
EAS %CV = 10.5%
National Warning Limits (75th percentile) = 19%CV
National Control Limits (90th percentile) = 33%CV

2.2.2. ***C. dubia*** - 48 hr. Acute Test – LC_{50} = 0.490 g/l 95%CI (0.343 g/l - 0.636g/l)
EAS %CV = 14.9%
National Warning Limits (75th percentile) = 29%CV
National Control Limits (90th percentile) = 34%CV

2.3. **LITERATURE CITED:**

1. APHA. 1992. *Standard methods for the examination of water and wastewater*, 18th Ed. American Public Health Association, Washington, D.C
2. USEPA. 2002. *Methods for measuring the acute toxicity of effluents and receiving waters to freshwater and marine organisms*, 5th Ed. EPA-821-R-02-012
3. USEPA 2000. *Understanding and Accounting for Method Variability in Whole Effluent Toxicity Applications under the National Pollutant Discharge Elimination System, (Table B-2).* June 2000. EPA 833-R-00-003.

WHOLE EFFLUENT TEST conducted in accordance with US EPA 600/4-90/027
Fifth Edition October 2002

CLIENT NAME: LaGrange Wastewater Treatment Plant, Outfall 001, 24 hr composite
NPDES NUMBER: MO-0041203
TYPE OF METHOD: single dilution, 48 hrs, PP & CD, AEC=9.1%
DATE & TIME OF COLLECTION: 07/23/12 0730 hrs - 07/24/12 0730 hrs by Mike Henderson
DATE & TIME OF SUBMISSION: 07/25/12 1025 hrs by UPS

Upstream: Mississippi River
Collected: 07/24/12 0730 hrs by Mike Henderson

INITIAL OBSERVATIONS	DATE	TIME	ANALYST	QC LOT	QC EXP VALUE	INT EFFL	INT UC	INT RC
LOG NUMBER / ID NUMBER						1501709	1501709A	RC4044
pH - SU	07/25/12	1045 hrs	SCS	SB114 (8.8-9.2)	8.88	8.17	8.15	7.77
TEMPERATURE °C RECEIVED	07/25/12	1045 hrs	SCS	EAS 106		5	6	24
SPECIFIC CONDUCTANCE umhos	07/25/12	1045 hrs	SCS	ERA203-506 (458-522)	494	1286	1999	249
HARDNESS - ppm	07/25/12	1045 hrs	SCS	ERA P170-507(107-134)	120	360	220	80
CHLORINE - ppm	07/25/12	1045 hrs	SCS	tap water	+	<0.04	<0.04	<0.04
DISSOLVED OXYGEN - ppm	07/25/12	1045 hrs	SCS	cal@840		10.09	6.89	8.42
TOTAL ALKALINITY - ppm	07/25/12	1600 hrs	SCS	ERA P203-506(105-124)	111.0	336	168	63.7
INITIAL AMMONIA - ppm	07/30/12	1200 hrs	SCS	EAS #2446 (8-12)	10.2	<0.05	<0.05	<0.05
TOTAL DISSOLVED SOLIDS -ppm								

0 HOUR OBSERVATIONS	DATE	TIME	ANALYST	QC LOT	QC EXP VALUE	RC	UC	100%	50%	25%	12.50%	6.25%	9.1 %AEC
pH - SU	07/25/12	1100 hrs	SCS	SB114 (8.8-9.2)	8.88	7.67	7.89						7.81
TEMPERATURE °C	07/25/12	1100 hrs	SCS	EAS 106		24.3	24.1						24.1
SPECIFIC CONDUCTANCE umhos	07/25/12	1100 hrs	SCS	ERA203-506 (458-522)	494	240	376						460
DISSOLVED OXYGEN - ppm	07/25/12	1100 hrs	SCS	cal@840		8.3	7.6						7.7

24 HOUR OBSERVATIONS - PP	DATE	TIME	ANALYST	QC LOT	QC EXP VALUE	RC	UC	100%	50%	25%	12.50%	6.25%	9.1%AEC
pH - SU	07/26/12	1100 hrs	SCS	SB114 (8.8-9.2)	8.89	7.26	7.98						7.95
TEMPERATURE °C	07/26/12	1100 hrs	SCS	EAS 106		25.1	25.1						25.1
SPECIFIC CONDUCTANCE umhos	07/26/12	1100 hrs	SCS	ERA203-506 (458-522)	5.07	258	382						468
DISSOLVED OXYGEN - ppm	07/26/12	1100 hrs	SCS	cal@840		8.8	7.5						7.5
48 HOUR OBSERVATIONS - PP	**DATE**	**TIME**	**ANALYST**	**QC LOT**	**QC EXP VALUE**	**RC**	**UC**	**100%**	**50%**	**25%**	**12.50%**	**6.25%**	**9.1 %AEC**
pH - SU	07/27/12	1100 hrs	SCS	SB114 (8.8-9.2)	8.86	7.62	7.71						7.67
TEMPERATURE °C	07/27/12	1100 hrs	SCS	EAS 106		25.1	25.1						25.1
SPECIFIC CONDUCTANCE umhos	07/27/12	1100 hrs	SCS	ERA203-506 (458-522)	495	272	392						469
DISSOLVED OXYGEN - ppm	07/27/12	1100 hrs	SCS	cal@840		7.9	8.2						7.6
FINAL AMMONIA - ppm				EAS #2375 (8-12)									

24 HOUR OBSERVATIONS - CD	DATE	TIME	ANALYST	QC LOT	QC EXP VALUE	RC	UC	100%	50%	25%	12.50%	6.25%	9.1 %AEC
pH - SU	07/26/12	1100 hrs	SCS	SB114 (8.8-9.2)	8.89	8.13	8.10						8.07
TEMPERATURE °C	07/26/12	1100 hrs	SCS	EAS 106		25.1	25.1						25.1
SPECIFIC CONDUCTANCE umhos	07/26/12	1100 hrs	SCS	ERA203-506 (458-522)	5.07	247	367						463
DISSOLVED OXYGEN - ppm	07/26/12	1100 hrs	SCS	cal@840		8.6	8.7						8.7
48 HOUR OBSERVATIONS - CD	**DATE**	**TIME**	**ANALYST**	**QC LOT**	**QC EXP VALUE**	**RC**	**UC**	**100%**	**50%**	**25%**	**12.50%**	**6.25%**	**9.1 %AEC**
pH - SU	07/27/12	1100 hrs	SCS	SB114 (8.8-9.2)	8.86	8.31	8.02						7.98
TEMPERATURE °C	07/27/12	1100 hrs	SCS	EAS 106		25.1	25.1						25.1
SPECIFIC CONDUCTANCE umhos	07/27/12	1100 hrs	SCS	ERA203-506 (458-522)	495	263	380						455
DISSOLVED OXYGEN - ppm	07/27/12	1100 hrs	SCS	cal@840		8.5	8.4						8.6
FINAL AMMONIA - ppm				EAS #2375 (8-12)									

Approved by: [signature] Date: 07/31/2012

WHOLE EFFLUENT TEST conducted in accordance with US EPA 600/4-90/027
Fifth Edition October 2002

LaGrange Wastewater Treatment Plant, Outfall 001, 24 hr composite EAS LOG# 1501709

Date Test Began: July 25, 2012 Time Test Began: 1100 hrs Analyst 1: DFW
Analyst 2: KJR
Date Test Finished: July 27, 2012 Time Test Finished: 1100 hrs Analyst 3: SCS

P. promelas (PP) AGE: 7 days HATCH NUMBER: 8434 c-k

	RC	UC	100%	50%	25%	12.50%	6.25%	9.1% AEC
PERIOD	ALIVE	ALIVE	ALIVE	ALIVE	ALIVE	ALIVE	ALIVE	ALIVE
0 HR-PP	10,10,10,10	10,10,10,10						10,10,10,10
24 HR-PP	10,10,10,10	10,10,10,10						10,10,10,10
48 HR-PP	10,10,10,10	10,10,10,10						10,10,10,10

Ceriodaphnia dubia (CD) AGE: <24 hours HATCH NUMBER: 2534 c-k

	RC	UC	100%	50%	25%	12.50%	6.25%	9.1% AEC
PERIOD	ALIVE	ALIVE	ALIVE	ALIVE	ALIVE	ALIVE	ALIVE	ALIVE
0 HR-CD	5,5,5,5	5,5,5,5						5,5,5,5
24 HR-CD	5,5,5,5	5,5,5,5						5,5,5,5
48 HR-CD	5,5,5,5	5,5,5,5						5,5,5,5

Approved by: [signature] Date: 07/31/2012

WHOLE EFFLUENT TEST conducted in accordance with US EPA 600/4-90/027
Fifth Edition October 2002

LaGrange Wastewater Treatment Plant, Outfall 001, 24 hr composite EAS#: 1501709

Notes & Comments												

Prepared by: [illegible]

Date: 07/31/2012

Single 9.1 8

11821 E

ENVIRONMENTAL ANALYSIS SOUTH, INC.
4000 East Jackson Blvd
Jackson, MO 63755
Phone: (573) 204-8817 Fax: (573) 204-8818

eas

WHOLE EFFLUENT TOXICITY TESTING
CHAIN OF CUSTODY

CLIENT: Prairie Analytical System

NPDES PERMIT NUMBER: MO-0041203

EFFLUENT NAME: LaGrange WWTP (LEGAL NAME) GRAB ☐ 24 HR COMPOSITE ☒

COLLECTION DATA: START DATE: 7-23-12 START TIME: 7:30

FINISH DATE: 7-24-12 FINISH TIME: 7:30

UPSTREAM NAME: Mississippi River (LEGAL NAME) (GRAB SAMPLE)

COLLECTION DATA: DATE: 7-24-12 TIME: 7:30

SAMPLER NAME: Mike Henderson (PRINT NAME) CARRIER: UPS

Disclaimer: Environmental Analysis South, Inc. shall not be held financially liable for invalid whole effluent toxicity test (WET) or shipping charges resulting from the following reasons:

- Sampling & holding time errors (Will results in a setup charge of $100 to the client)
- Commercial carrier delivery problems or errors (Will results in a setup charge of $100 to the client)
- Problems with health or delivery of test organisms by vendor (No setup charge to client)

SAMPLER CHECK LIST

NO HEADSPACE IN BOTTLES ☐
SHIP SAMPLES BY NEXT DAY CARRIER OR DELIVER TO LAB ON 7/25/12 ☐
SAMPLES TO BE HAND DELIVERED TO LABORATORY SAME DAY AS TEST SETUP ☐
SUFFICIENT ICE TO COOL SAMPLES TO A RANGE OF 0 - 6°C WHEN SHIPPING OVERNIGHT ☐

RELINQUISHED BY: [signature] DATE: 7-24-12 TIME: 15:00

LABORATORY USE ONLY

EFFLUENT LOG NUMBER: 1501709

RECEIVED TEMPERATURE: 5 °C THERMOMETER ASSIGNED NUMBER: _____

HEADSPACE: YES or NO SAMPLES ICED or DELIVERED SAME DAY AS TEST

UPSTREAM LOG NUMBER: 1501709-A

RECEIVED TEMPERATURE: 6 °C THERMOMETER ASSIGNED NUMBER: _____

HEADSPACE: YES or NO SAMPLES ICED or DELIVERED SAME DAY AS TEST

RECEIVED BY: [signature] DATE: 7/25/12 TIME: 1025 UPS

MISSOURI DEPARTMENT OF NATURAL RESOURCES
WATER PROTECTION PROGRAM - P.O. BOX 176, JEFFERSON CITY MO, 65102

WHOLE EFFLUENT TOXICITY (WET) TEST REPORT

(TO BE ATTACHED TO WET TESTS FOR SUBMISSION TO THE REGULATORY AUTHORITY)

PART A – TO BE COMPLETED IN FULL BY PERMITTEE

FACILITY NAME LaGrange Wastewater Treatment Plant	DATE & TIME COLLECTED EFFLUENT 07/23/12 0730-07/24/12 0730 UPSTREAM 07/24/12 0730
PERMIT NUMBER MO-0041203	PERMIT OUTFALL NUMBER Outfall # 001
COLLECTOR'S NAME Mike Henderson	
RECEIVING STREAM COLLECTION SITE AND DESCRIPTION Mississippi River	
PERMIT ALLOWABLE EFFLUENT CONCENTRATION (AEC) 9.1%	EFFLUENT SAMPLE TYPE (CHECK ONE) ☒ 24HR COMPOSITE ☐ GRAB ☐ OTHER
SAMPLE NUMBER EFFLUENT 1501709 UPSTREAM 1501709A	UPSTREAM SAMPLE TYPE (CHECK ONE) ☐ 24HR COMPOSITE ☒ GRAB ☐ OTHER
PERMITTED EFFLUENT DAILY MAXIMUM LIMITATION FOR CHLORINE ____ mg/L	PERMITTED EFFLUENT DAILY MAXIMUM LIMITATION FOR AMMONIA ____ mg/L

PART B – TO BE COMPLETED IN FULL BY PERFORMING LABORATORY

PERFORMING LABORATORY Environmental Analysis South, Inc.	TEST TYPE Acute Static Non renewal Test Single Dilution	
FINAL REPORT NUMBER MO_1501709	TEST DURATION 48 hour	
DATE OF LAST REFERENCE TOXICANT TESTING July 11, 2012	TEST METHOD Methods for Measuring the Acute Toxicity of Effluents and Receiving Waters to Freshwater and Marine Organisms	
DATE AND TIME SAMPLES RECEIVED AT LABORATORY 07/25/12 1025 hrs by UPS	TEST START DATE AND TIME 07/25/12 1100 hrs	TEST END DATE AND TIME 07/27/12 1100 hrs
SAMPLE DECHLORINATED PRIOR TO ANALYSIS? ☐ YES ☒ NO EFFLUENT ____ UPSTREAM ____	TEST ORGANISM #1 AND AGE Pimephales promelas 7 days	TEST ORGANISM #2 AND AGE Ceriodaphnia dubia < 24 hours
SAMPLE FILTERED[1] PRIOR TO ANALYSIS? ☐ YES ☒ NO EFFLUENT ____ UPSTREAM ____	90% OR GREATER SURVIVAL IN SYNTHETIC CONTROL? ☒ YES ☐ NO	DILUTION WATER USED TO ACHIEVE AEC upstream 1501709a
FILTER MESH SIEVE SIZE[2] None	EFFLUENT ORGANISM #1 % MORTALITY AT AEC 0%	EFFLUENT ORGANISM #2 % MORTALITY AT AEC 0%
SAMPLE AERATED DURING TESTING? ☐ YES ☒ NO	UPSTREAM ORGANISM #1 % MORTALITY 0%	UPSTREAM ORGANISM #2 % MORTALITY 0%
pH ADJUSTED? ☐ YES ☒ NO EFFLUENT ____ UPSTREAM ____	TEST RESULT AT AEC FOR ORGANISM #1 ☒ PASS ☐ FAIL	TEST RESULT AT AEC FOR ORGANISM #2 ☒ PASS ☐ FAIL

MINIMUM REQUIRED ANALYTICAL RESULTS FOR THE 100% EFFLUENT SAMPLE

PARAMETER	RESULT	METHOD	WHEN ANALYZED
Temperature °C	5	SM18 2550B stored at 4 degree C until test setup	07/25/12 1045 hrs
pH Standard Units	8.17	SM18 4500-H B	07/25/12 1045 hrs
Conductance µMohs	1286	SM18 2510B	07/25/12 1045 hrs
Dissolved Oxygen mg/L	10.09	SM18 4500-O G	07/25/12 1045 hrs
Total Residual Chlorine mg/L	<0.04	SM18 4500-Cl G	07/25/12 1045 hrs
Unionized Ammonia mg/L	<0.05x0.08<0.010	SM18 4500-NH3 F @ 25 degree C	07/30/12 1200 hrs
*Total Alkalinity mg/L	336	SM18 2320B	07/25/12 1600 hrs
*Total Hardness mg/L	360	SM18 2340 C	07/25/12 1045 hrs

*Recommended by USEPA guidance, not a required analysis.

[1] Samples shall only be filtered if indigenous organisms are present that may be confused with, or attack, the test organisms.
[2] Filters shall have a sieve size of 60 microns or greater.

CONTINUED ON PAGE 2

WHOLE EFFLUENT TOXICITY (WET) TEST REPORT

(TO BE ATTACHED TO WET TESTS FOR SUBMISSION TO THE REGULATORY AUTHORITY)

MINIMUM REQUIRED ANALYTICAL RESULTS FOR THE 100% UPSTREAM SAMPLE[3]

PARAMETER	RESULT	METHOD	WHEN ANALYZED
Temperature °C	6	SM18 2550B stored at 4 degree C until test setup	07/25/12 1045 hrs
pH Standard Units	8.15	SM18 4500-H B	07/25/12 1045 hrs
Conductance µMohs	1999	SM18 2510B	07/25/12 1045 hrs
Dissolved Oxygen mg/L	6.89	SM18 4500-O G	07/25/12 1045 hrs
Total Residual Chlorine mg/L	<0.04	SM18 4500-Cl G	07/25/12 1045 hrs
Unionized Ammonia mg/L	<0.05x0.08<0.010	SM18 4500-NH3 F @ 25 degree C	07/30/12 1200 hrs
*Total Alkalinity mg/L	168	SM18 2320B	07/25/12 1600 hrs
*Total Hardness mg/L	220	SM18 2340 C	07/25/12 1045 hrs

*Recommended by USEPA guidance, not a required analysis.

PRELIMINARY TEST ACCEPTABILITY MATRIX (FOR USE BY PERMITTEE IN DETERMINING TEST VALIDITY)

PERMIT ALLOWABLE EFFLUENT CONCENTRATION (AEC): As indicated on permit. Test is invalid otherwise.

EFFLUENT SAMPLE TYPE: As indicated on permit. Test is invalid otherwise.

TEST TYPE: Acute Static Non-Renewal Test or other as indicated on permit. Test is invalid otherwise.

TEST DURATION: Forty-eight (48) hours or as indicated on permit. Test is invalid otherwise.

TEST ORGANISMS: As indicated on permit. Test is invalid otherwise.

DILUTION WATER USED TO ACHIEVE AEC: Upstream receiving water required if available.

TEST METHOD: The only acceptable method is the ***most current edition*** of Methods for Measuring the Acute Toxicity of Effluents and Receiving Waters to Freshwater and Marine Organisms, or other as specifically assigned by EPA for determining NPDES compliance. Test is invalid otherwise.

TEST START DATE & TIME: Unless otherwise specified in writing by EPA, if >36 hours lapse between collection and initiation, test is invalid.

FILTER MESH SIEVE SIZE: Unless otherwise specified in writing by EPA, if sieve size is smaller than 60 microns, test is invalid.

90% OR GREATER SURVIVAL IN LABORATORY CONTROL(S) (Y/N): If NO, test is invalid.

PARAMETER	RESULT	NOTES	WHEN ANALYZED
Temperature °C	0 - 6	Unless received by the laboratory on the same day as collected, values outside this range invalidate the test.	Upon receipt

[3] Where no upstream control is available, enter results from laboratory or synthetic control.

Chain of Custody Record

Central IL - 1210 Capital Airport Drive - Springfield, IL 62707-8490 - Phone (217) 753-1148 - Facsimile (217) 753-1152
Chicago Office - PO Box 2116 - Crystal Lake, IL 60039-2116 - Phone (847) 651-2604 - Facsimile (847) 458-0560
www.prairieanalytical.com

Prairie Analytical Systems, INCORPORATED

	La Grange WWTP
	PO Box 266
	La Grange, Mo 63448
	573-655-0212 /
	Monthly wastewater
	/
	Standard [x] Rush [ ] Date Required:
	Mike Henderson

							WET test								
Effluent	7-24-12	7:30			X		X								___ Resid ___ Ind/Comm ___ A ___ B ___ C ___ Resid ___ Indust
Upstream	7-24-12	7:30				X									

Mike Henderson	7/24/12	8:30	Carlee Sm[illegible]	7-24-12	8:30

Special Instructions:

Q/C Level 1 X 2 ___ 3 ___ 4 ___

Page 1 of 1

Copies: White - Client Yellow - PAS, Inc. Pink - Sampler

Environmental Analysis South, Inc.
4000 East Jackson Blvd. • Jackson, MO 63755 • 573-204-8817 • Fax 573-204-8818

REPORT OF ACUTE TOXICITY TESTING
LaGrange Wastewater Treatment Plant
OUTFALL 001 (24 hr composite) AEC = 9.1%
MO-0041203
EAS LOG# 1314125
July 27, 2011 through July 29, 2011

Tests performed by:
John P. Clippard / Chemical Analyst at Environmental Analysis South (EAS)
Kelly J. Ray / Biologist at Environmental Analysis South (EAS)
Sara C. Shields / Lab Supervisor - Chemist at Environmental Analysis South (EAS)
David F. Warren / Lab Director - Chemist at Environmental Analysis South (EAS)

1. **Report Summation**
   1.1. **Data Summation**
   1.2. **Conclusion**
2. **Method Summation**
   2.1. **Test Conditions and Methods**
   2.2. **Potassium chloride Reference Salt Test**
      2.2.1. ***Pimephales promelas* data**
      2.2.2. ***Ceriodaphnia dubia* data**
   2.3. **Literature Cited**
3. **Raw Data Bench Sheets**
   3.1. **Initial observations (page 1)**
   3.2. **Zero hour Observations (page 1)**
   3.3. **Twenty-four (24) hour Observations (page 1)**
   3.4. **Forty-eight (48) hour Observations (page 1)**
   3.5. **Survival Data Table (page 2)**
   3.6. **Test Comments (page 3)**
4. **Chain of Custody**
5. **MO DNR "Whole Effluent Toxicity (WET) Test Report (Form 780-1899)**

Environmental Analysis South, Inc.
4000 East Jackson Blvd. • Jackson, MO 63755 • 573-204-8817 • Fax 573-204-8818

REPORT OF ACUTE TOXICITY TESTING
LaGrange Wastewater Treatment Plant
OUTFALL 001 (24 hr composite) AEC = 9.1%
MO-0041203
EAS LOG# 1314125
July 27, 2011 through July 29, 2011

1. REPORT SUMMATION:

1.1. Single Dilution Data Summation

	Pimephales promelas Acute Toxicity Test	*Ceriodaphnia dubia* Acute Toxicity Test
Survival in the Effluent at 48 Hours	100%	100%
Survival in the Reconstituted Control (RC) at 48 Hours	100%	100%
Survival in the Upstream Control (UC) at 48 Hours	95%	100%
Statistical Results Comparing the Survival Data of the Effluent with the Control (arc sine square root transformation)	No Significant Difference at alpha = 0.05 **PASS**	No Significant Difference at alpha = 0.05 **PASS**

* Indicates a significant difference at alpha = 0.5 between effluent and control survival data.

Conclusion: The mortality observed with both species was determined not to be significantly different than that observed in the control sample. Based on these results the outfall **passed** the whole effluent toxicity test with both indicator species.

Approved by _____
Sara C. Shields, Chemist

Environmental Analysis South, Inc.
4000 East Jackson Blvd. • Jackson, MO 63755 • 573-204-8817 • Fax 573-204-8818

REPORT OF ACUTE TOXICITY TESTING
LaGrange Wastewater Treatment Plant
OUTFALL 001 (24 hr composite) AEC = 9.1%
MO-0041203
EAS LOG# 1314125
July 27, 2011 through July 29, 2011

2. TEST METHOD SUMMARY

2.1. TEST CONDITIONS AND METHODS:

	Ceriodaphnia dubia:	*Pimephales promelas:*
Test duration:	48 hours	48 hours
Temperature:	24 - 26 degree Celsius	24 - 26 degree Celsius
Light quality:	Ambient laboratory illumination	Ambient laboratory illumination
Photoperiod:	16 hour light, 8 hours dark	16 hour light, 8 hours dark
Control Water:	Moderately Hard Reconstituted Water	Moderately Hard Reconstituted Water
Dilution Water:	Upstream Water - If unavailable or toxic, then control water will be used.	Upstream Water - If unavailable or toxic, then control water will be used.
Size of test vessel:	30 milliliters	250 milliliters
Volume of test solution:	15 milliliters	200 milliliters
Age of test organisms:	<24 hours	1 -14 days (all same age)
Number of organisms/test vessel:	5	10
Number of replicates/concentration:	4	4
Number of organisms/concentration:	20	40 for a single dilution test and 20 for a multiple dilution test
Feeding regime:	None (fed prior to test)	None (fed prior to test)
Aeration:	None	None
Test acceptability criterion:	90% or greater survival in controls	90% or greater survival in controls

The methodology used for the chemistry data was taken from the *Standard Methods for the Examination of Water and Wastewater*, 18th edition (1992). The exception was hardness, which was determined using a Hach EDTA titration test kit. The toxicity tests follow guidelines laid out in the permittee's NPDES permit and were conducted according to EPA approved methods (USEPA 2002).

All test organisms were cultured according to EPA approved methods (USEPA 2002). The *Ceriodaphnia dubia* and the *Pimephales promelas* were obtained from C-K Associates Inc. located in Baton Rouge, Louisiana and shipped overnight for use in the whole effluent toxicity test.

Environmental Analysis South, Inc.
4000 East Jackson Blvd. • Jackson, MO 63755 • 573-204-8817 • Fax 573-204-8818

REPORT OF ACUTE TOXICITY TESTING
LaGrange Wastewater Treatment Plant
OUTFALL 001 (24 hr composite) AEC = 9.1%
MO-0041203
EAS LOG# 1314125
July 27, 2011 through July 29, 2011

2.2. REFERENCE TOXICITY TEST:

Environmental Analysis South performs monthly reference toxicity tests. The most recent reference test was initiated on July 6, 2011 using KCL Lot #41713. Following are the results:

2.2.1. ***P. promelas*** - 48 hr. Acute Test – LC_{50} = 1.068 g/l 95%CI (0.7311-1.405 g/l)
EAS %CV = 15.8%
National Warning Limits (75th percentile) = 19%CV
National Control Limits (90th percentile) = 33%CV

2.2.2. ***C. dubia*** - 48 hr. Acute Test – LC_{50} = 0.463 g/l 95%CI (0.294-0.632g/l)
EAS %CV = 18.3%
National Warning Limits (75th percentile) = 29%CV
National Control Limits (90th percentile) = 34%CV

2.3. LITERATURE CITED:

1. APHA. 1992. *Standard methods for the examination of water and wastewater*, 18th Ed. American Public Health Association, Washington, D.C
2. USEPA. 2002. *Methods for measuring the acute toxicity of effluents and receiving waters to freshwater and marine organisms*, 5th Ed. EPA-821-R-02-012
3. USEPA 2000. *Understanding and Accounting for Method Variability in Whole Effluent Toxicity Applications under the National Pollutant Discharge Elimination System, (Table B-2).* June 2000. EPA 833-R-00-003.

WHOLE EFFLUENT TEST conducted in accordance with US EPA 600/4-90/027
Fifth Edition October 2002

CLIENT NAME:	LaGrange Wastewater Treatment Plant, Outfall 001, 24 hr composite
NPDES NUMBER:	MO-0041203
TYPE OF METHOD:	single dilution, 48 hrs, PP & CD, AEC=9.1%
DATE & TIME OF COLLECTION:	07/25/11 0730 hrs - 07/26/11 0730 hrs by Mike Henderson
DATE & TIME OF SUBMISSION:	07/27/11 1015 hrs by UPS

Upstream: Mississippi River
Collected: 07/26/11 by City of Marshall

INITIAL OBSERVATIONS	DATE	TIME	ANALYST	QC LOT	QC EXP VALUE	INT EFFL	INT UC	INT RC
LOG NUMBER / ID NUMBER						1314125	1314125A	4017
pH - SU	07/27/11	1030 hrs	SCS	SB114 (8.8-9.2)	9.1	8.19	8.42	7.94
TEMPERATURE °C RECEIVED	07/27/11	1030 hrs	SCS	EAS 106		4	2	24
SPECIFIC CONDUCTANCE umhos	07/27/11	1030 hrs	SCS	ERA506-010511(401-457)	434	987	541	247
HARDNESS - ppm	07/27/11	1030 hrs	SCS	ERA P170-507(107-134)	120	260	270	80
CHLORINE - ppm	07/27/11	1030 hrs	SCS	tap water	+	<0.04	<0.04	<0.04
DISSOLVED OXYGEN - ppm	07/27/11	1030 hrs	SCS	cal@840		2.5	<2	7.5
TOTAL ALKALINITY - ppm	07/28/11	1500 hrs	SCS	ERA506-010511(60.1-71.9	65.8	293	233	64.7
INITIAL AMMONIA - ppm	08/03/11	1400 hrs	JPC	EAS #1981 (8-12)	10.1	0.074	<0.05	<0.05
TOTAL DISSOLVED SOLIDS -ppm								

0 HOUR OBSERVATIONS	DATE	TIME	ANALYST	QC LOT	QC EXP VALUE	RC	UC	100%	50%	25%	12.5%	6.25%	9.1%AEC
pH - SU	07/27/11	1100 hrs	SCS	SB114 (8.8-9.2)	8.98	8.22	8.34						8.32
TEMPERATURE °C	07/27/11	1100 hrs	SCS	EAS 106		24.1	23.9						24
SPECIFIC CONDUCTANCE umhos	07/27/11	1100 hrs	SCS	ERA506-010511(401-457)	432	257	552						569
DISSOLVED OXYGEN - ppm	07/27/11	1100 hrs	SCS	cal@840		7.2	8.7						8.7

24 HOUR OBSERVATIONS - PP	DATE	TIME	ANALYST	QC LOT	QC EXP VALUE	RC	UC	100%	50%	25%	12.5%	6.25%	9.1%AEC
pH - SU	07/28/11	1100 hrs	SCS	SB114 (8.8-9.2)	8.91	7.83	8.08						8.15
TEMPERATURE °C	07/28/11	1100 hrs	SCS	EAS 106		25.3	25.3						25
SPECIFIC CONDUCTANCE umhos	07/28/11	1100 hrs	SCS	ERA506-010511(401-457)	427	267	536						580
DISSOLVED OXYGEN - ppm	07/28/11	1100 hrs	SCS	cal@840		6.5	5.7						5.7
48 HOUR OBSERVATIONS - PP	**DATE**	**TIME**	**ANALYST**	**QC LOT**	**QC EXP VALUE**	**RC**	**UC**	**100%**	**50%**	**25%**	**12.5%**	**6.25%**	**9.1%AEC**
pH - SU	07/29/11	1100 hrs	SCS	SB114 (8.8-9.2)	8.93	7.69	8.17						8.19
TEMPERATURE °C	07/29/11	1100 hrs	SCS	EAS 106		24.1	24.1						24
SPECIFIC CONDUCTANCE umhos	07/29/11	1100 hrs	SCS	ERA506-010511(401-457)	424	277	542						584
DISSOLVED OXYGEN - ppm	07/29/11	1100 hrs	SCS	cal@840		6.5	8.6						8.7
FINAL AMMONIA - ppm				EAS #2375 (8-12)									

24 HOUR OBSERVATIONS - CD	DATE	TIME	ANALYST	QC LOT	QC EXP VALUE	RC	UC	100%	50%	25%	12.5%	6.25%	9.1%AEC
pH - SU	07/28/11	1100 hrs	SCS	SB114 (8.8-9.2)	8.91	8.48	8.42						8.42
TEMPERATURE °C	07/28/11	1100 hrs	SCS	EAS 106		25.3	25.3						25
SPECIFIC CONDUCTANCE umhos	07/28/11	1100 hrs	SCS	ERA506-010511(401-457)	427	263	516						569
DISSOLVED OXYGEN - ppm	07/28/11	1100 hrs	SCS	cal@840		7.1	7.1						7.2
48 HOUR OBSERVATIONS - CD	**DATE**	**TIME**	**ANALYST**	**QC LOT**	**QC EXP VALUE**	**RC**	**UC**	**100%**	**50%**	**25%**	**12.5%**	**6.25%**	**9.1%AEC**
pH - SU	07/29/11	1100 hrs	SCS	SB114 (8.8-9.2)	8.93	8.27	8.46						8.48
TEMPERATURE °C	07/29/11	1100 hrs	SCS	EAS 106		24.1	24.5						25
SPECIFIC CONDUCTANCE umhos	07/29/11	1100 hrs	SCS	ERA506-010511(401-457)	424	255	505						556
DISSOLVED OXYGEN - ppm	07/29/11	1100 hrs	SCS	cal@840		6.8	7.6						8.0
FINAL AMMONIA - ppm				EAS #2375 (8-12)									

Approved by: [illegible]

Date: [illegible]

WHOLE EFFLUENT TEST conducted in accordance with US EPA 600/4-90/027
Fifth Edition October 2002

LaGrange Wastewater Treatment Plant, Outfall 001, 24 hr composite **EAS LOG# 1314125**

Date Test Began: July 27, 2011 **Time Test Began:** 1100 hrs **Analyst 1:** DFW
Analyst 2: KJR
Date Test Finished: July 29, 2011 **Time Test Finished:** 1100 hrs **Analyst 3:** SCS

P. promelas (PP) **AGE:** 10 days **HATCH NUMBER:** 8072 c-k

	RC	UC	100%	50%	25%	12.5%	6.25%	9.1%AEC
PERIOD	ALIVE	ALIVE	ALIVE	ALIVE	ALIVE	ALIVE	ALIVE	ALIVE
0 HR-PP	10,10,10,10	10,10,10,10						10,10,10,10
24 HR-PP	10,10,10,10	8,10,10,10						10,10,10,10
48 HR-PP	10,10,10,10	8,10,10,10						10,10,10,10

Ceriodaphnia dubia (CD) **AGE:** <24 hours **HATCH NUMBER:** 2357 c-k

	RC	UC	100%	50%	25%	12.5%	6.25%	9.1%AEC
PERIOD	ALIVE	ALIVE	ALIVE	ALIVE	ALIVE	ALIVE	ALIVE	ALIVE
0 HR-CD	5,5,5,5	5,5,5,5						5,5,5,5
24 HR-CD	5,5,5,5	5,5,5,5						5,5,5,5
48 HR-CD	5,5,5,5	5,5,5,5						5,5,5,5

Approved by: Date: 08/05/2011

LaGrange Wastewater Treatment Plant, Outfall 001, 24 hr composite EAS#: 1314125

Notes & Comments

sample and upstream aerated prior to test initiation due to low initial DO upon arrival

Prepared by: [illegible]

Date: 08/05/2011

Single 9.18

114137

ENVIRONMENTAL ANALYSIS SOUTH, INC.
4000 East Jackson Blvd
Jackson, MO 63755
Phone: (573) 204-8817 Fax: (573) 204-8818

eas

WHOLE EFFLUENT TOXICITY TESTING CHAIN OF CUSTODY

CLIENT: Prairie Analytical Systems

NPDES PERMIT NUMBER: MO-0041203

EFFLUENT NAME: LaGrange Wastewater treatment (LEGAL NAME) GRAB ☐ 24 HR COMPOSITE ☑

COLLECTION DATA: START DATE: 7-25-11 START TIME: 7:30

FINISH DATE: 7-26-11 FINISH TIME: 7:30

UPSTREAM NAME: Mississippi River (LEGAL NAME) (GRAB SAMPLE)

COLLECTION DATA: DATE: 7-26-11 TIME: 7:30

SAMPLER NAME: Mike Henderson (PRINT NAME) CARRIER: UPS

Disclaimer: Environmental Analysis South, Inc. shall not be held financially liable for invalid whole effluent toxicity test (WET) or shipping charges resulting from the following reasons:

- Sampling & holding time errors (Will results in a setup charge of $100 to the client)
- Commercial carrier delivery problems or errors (Will results in a setup charge of $100 to the client)
- Problems with health or delivery of test organisms by vendor (No setup charge to client)

SAMPLER CHECK LIST

NO HEADSPACE IN BOTTLES ☐
[redacted] 7/27/11 ☐
SAMPLES TO BE HAND DELIVERED TO LABORATORY SAME DAY AS TEST SETUP ☐
[redacted]

RELINQUISHED BY: [signature] DATE: 7-26-11 TIME: 13:00

LABORATORY USE ONLY

EFFLUENT LOG NUMBER: 1314125

RECEIVED TEMPERATURE: 4 °C THERMOMETER ASSIGNED NUMBER: _____

HEADSPACE: YES or NO SAMPLES ICED or DELIVERED SAME DAY AS TEST

UPSTREAM LOG NUMBER: 1314125 A

RECEIVED TEMPERATURE: 2 °C THERMOMETER ASSIGNED NUMBER: _____

HEADSPACE: YES or NO SAMPLES ICED or DELIVERED SAME DAY AS TEST

RECEIVED BY: [signature] DATE: 7/27/11 TIME: 1015

MISSOURI DEPARTMENT OF NATURAL RESOURCES
WATER PROTECTION PROGRAM - P.O. BOX 176, JEFFERSON CITY MO, 65102

WHOLE EFFLUENT TOXICITY (WET) TEST REPORT

(TO BE ATTACHED TO WET TESTS FOR SUBMISSION TO THE REGULATORY AUTHORITY)

PART A – TO BE COMPLETED IN FULL BY PERMITTEE

FACILITY NAME LaGrange Wastewater Treatment Plant	DATE & TIME COLLECTED EFFLUENT 07/25/11 0730- 07/26/11 0730 UPSTREAM 07/26/11
PERMIT NUMBER MO-0041203	PERMIT OUTFALL NUMBER Outfall # 001
COLLECTOR'S NAME Mike Henderson	
RECEIVING STREAM COLLECTION SITE AND DESCRIPTION Mississippi River	
PERMIT ALLOWABLE EFFLUENT CONCENTRATION (AEC) 9.1%	EFFLUENT SAMPLE TYPE (CHECK ONE) ☒ 24HR COMPOSITE ☐ GRAB ☐ OTHER _____
SAMPLE NUMBER EFFLUENT 1314125 UPSTREAM 1314125A	UPSTREAM SAMPLE TYPE (CHECK ONE) ☐ 24HR COMPOSITE ☒ GRAB ☐ OTHER _____
PERMITTED EFFLUENT DAILY MAXIMUM LIMITATION FOR CHLORINE _____ mg/L	PERMITTED EFFLUENT DAILY MAXIMUM LIMITATION FOR AMMONIA _____ mg/L

PART B – TO BE COMPLETED IN FULL BY PERFORMING LABORATORY

PERFORMING LABORATORY Environmental Analysis South, Inc.	TEST TYPE Acute Static Non renewal Test Single Dilution	
FINAL REPORT NUMBER MO_1314125	TEST DURATION 48 hour	
DATE OF LAST REFERENCE TOXICANT TESTING July 6, 2011	TEST METHOD Methods for Measuring the Acute Toxicity of Effluents and Receiving Waters to Freshwater and Marine Organisms	
DATE AND TIME SAMPLES RECEIVED AT LABORATORY 07/27/11 1015 hrs by UPS	TEST START DATE AND TIME 07/27/11 1100 hrs	TEST END DATE AND TIME 07/29/11 1100 hrs
SAMPLE DECHLORINATED PRIOR TO ANALYSIS? ☐ YES ☒ NO EFFLUENT _____ UPSTREAM _____	TEST ORGANISM #1 AND AGE Pimephales promelas 6 days	TEST ORGANISM #2 AND AGE Ceriodaphnia dubia < 24 hours
SAMPLE FILTERED[1] PRIOR TO ANALYSIS? ☐ YES ☒ NO EFFLUENT _____ UPSTREAM _____	90% OR GREATER SURVIVAL IN SYNTHETIC CONTROL? ☒ YES ☐ NO	DILUTION WATER USED TO ACHIEVE AEC upstream 1314125A
FILTER MESH SIEVE SIZE[2] None	EFFLUENT ORGANISM #1 % MORTALITY AT AEC 0%	EFFLUENT ORGANISM #2 % MORTALITY AT AEC 0%
SAMPLE AERATED DURING TESTING? ☐ YES ☒ NO	UPSTREAM ORGANISM #1 % MORTALITY 5%	UPSTREAM ORGANISM #2 % MORTALITY 0%
pH ADJUSTED? ☐ YES ☒ NO EFFLUENT _____ UPSTREAM _____	TEST RESULT AT AEC FOR ORGANISM #1 ☒ PASS ☐ FAIL	TEST RESULT AT AEC FOR ORGANISM #2 ☒ PASS ☐ FAIL

MINIMUM REQUIRED ANALYTICAL RESULTS FOR THE 100% EFFLUENT SAMPLE

PARAMETER	RESULT	METHOD	WHEN ANALYZED
Temperature °C	4	SM18 2550B stored at 4 degree C until test setup	07/27/11 1030 hrs
pH Standard Units	8.19	SM18 4500-H B	07/27/11 1030 hrs
Conductance µMohs	987	SM18 2510B	07/27/11 1030 hrs
Dissolved Oxygen mg/L	2.5	SM18 4500-O G	07/27/11 1030 hrs
Total Residual Chlorine mg/L	<0.04	SM18 4500-Cl G	07/27/11 1030 hrs
Unionized Ammonia mg/L	0.074x0.08<0.010	SM18 4500-NH3 F @ 25 degree C	08/03/11 1400 hrs
*Total Alkalinity mg/L	293	SM18 2320B	07/28/11 1500 hrs
*Total Hardness mg/L	260	SM18 2340 C	07/27/11 1030 hrs

*Recommended by USEPA guidance, not a required analysis.

[1] Samples shall only be filtered if indigenous organisms are present that may be confused with, or attack, the test organisms.
[2] Filters shall have a sieve size of 60 microns or greater.

CONTINUED ON PAGE 2

WHOLE EFFLUENT TOXICITY (WET) TEST REPORT

(TO BE ATTACHED TO WET TESTS FOR SUBMISSION TO THE REGULATORY AUTHORITY)

MINIMUM REQUIRED ANALYTICAL RESULTS FOR THE 100% UPSTREAM SAMPLE[3]			
PARAMETER	RESULT	METHOD	WHEN ANALYZED
Temperature °C	2	SM18 2550B stored at 4 degree C until test setup	07/27/11 1030 hrs
pH Standard Units	8.42	SM18 4500-H B	07/27/11 1030 hrs
Conductance µMohs	541	SM18 2510B	07/27/11 1030 hrs
Dissolved Oxygen mg/L	<2	SM18 4500-O G	07/27/11 1030 hrs
Total Residual Chlorine mg/L	<0.04	SM18 4500-Cl G	07/27/11 1030 hrs
Unionized Ammonia mg/L	<0.05x0.12<0.010	SM18 4500-NH3 F @ 25 degree C	08/03/11 1400 hrs
*Total Alkalinity mg/L	233	SM18 2320B	07/28/11 1500 hrs
*Total Hardness mg/L	270	SM18 2340 C	07/27/11 1030 hrs
*Recommended by USEPA guidance, not a required analysis.			

PRELIMINARY TEST ACCEPTABILITY MATRIX (FOR USE BY PERMITTEE IN DETERMINING TEST VALIDITY)

PERMIT ALLOWABLE EFFLUENT CONCENTRATION (AEC): As indicated on permit. Test is invalid otherwise.

EFFLUENT SAMPLE TYPE: As indicated on permit. Test is invalid otherwise.

TEST TYPE: Acute Static Non-Renewal Test or other as indicated on permit. Test is invalid otherwise.

TEST DURATION: Forty-eight (48) hours or as indicated on permit. Test is invalid otherwise.

TEST ORGANISMS: As indicated on permit. Test is invalid otherwise.

DILUTION WATER USED TO ACHIEVE AEC: Upstream receiving water required if available.

TEST METHOD: The only acceptable method is the ***most current edition*** of Methods for Measuring the Acute Toxicity of Effluents and Receiving Waters to Freshwater and Marine Organisms, or other as specifically assigned by EPA for determining NPDES compliance. Test is invalid otherwise.

TEST START DATE & TIME: Unless otherwise specified in writing by EPA, if >36 hours lapse between collection and initiation, test is invalid.

FILTER MESH SIEVE SIZE: Unless otherwise specified in writing by EPA, if sieve size is smaller than 60 microns, test is invalid.

90% OR GREATER SURVIVAL IN LABORATORY CONTROL(S) (Y/N): If NO, test is invalid.

PARAMETER	RESULT	NOTES	WHEN ANALYZED
Temperature °C	0 - 6	Unless received by the laboratory on the same day as collected, values outside this range invalidate the test.	Upon receipt

[3] Where no upstream control is available, enter results from laboratory or synthetic control.

Chain of Custody Record

Central IL - 1210 Capital Airport Drive - Springfield, IL 62707-8490 - Phone (217) 753-1148 - Facsimile (217) 753-1152
Chicago Office - PO Box 2116 - Crystal Lake, IL 60039-2116 - Phone (847) 651-2604 - Facsimile (847) 458-9680
www.prairieanalytical.com

Prairie Analytical Systems, INCORPORATED

Client	La Grange WWTP
Address	PO Box 266
City, State, Zip Code	La Grange, Mo 63448
Phone / Facsimile No.	573-655-0212 /
Client Project	WET test
Location	
Sampler(s) / Phone	/
Turnaround Time	Standard [x] Rush [ ] Date Required:
P.O. # or Invoice To	
Contact Person	Mike Henderson

Analysis and/or Method Requested: WET test

Reporting: TACO ___ Resid ___ Ind/Comm; CALM ___ A ___ B ___ C; RISC ___ Resid ___ Indust

Sample Description	Sampling Date	Sampling Time	Matrix Code	Number of Containers	Sample Comp	Sample Grab	WET test								Sampler Comments
Effluent	7/26/11	7:30am		1	X		X								
Mississippi River	7/26/11	7:30Am		1		X									

M = Matrix Code: A = Aqueous; DW = Drinking Water; GW = Groundwater; NA = Non-aqueous Liquid; S = Solid; O = Other (Specify)

Relinquished By	Date	Time	Received By	Date	Time	Method of Shipment
Mike Henderson	7/26/11	8:17	Carl Smith	7-26-11	8:17	hand

Special Instructions:

Q/C Level: 1__ 2__ 3__ 4__

On Wet Ice: Y / N
Proper Preservation: Y / N

Temperature (°C): 5

Page _____ of _____

Copies: White - Client Yellow - PAS, Inc. Pink - Sampler

Environmental Analysis South, Inc.
4000 East Jackson Blvd. • Jackson, MO 63755 • 573-204-8817 • Fax 573-204-8818

REPORT OF ACUTE TOXICITY TESTING
LaGrange Wastewater Treatment Plant
OUTFALL 001 (24 hr composite) AEC = 9.1%
MO-0041203
EAS LOG# 1208024
July 28, 2010 through July 30, 2010

Tests performed by:
John P. Clippard / Chemical Analyst at Environmental Analysis South (EAS)
Kelly J. Ray / Biologist at Environmental Analysis South (EAS)
Sara C. Shields / Lab Supervisor - Chemist at Environmental Analysis South (EAS)
David F. Warren / Lab Director - Chemist at Environmental Analysis South (EAS)

1. **Report Summation**
   1.1. **Data Summation**
   1.2. **Conclusion**
2. **Method Summation**
   2.1. **Test Conditions and Methods**
   2.2. **Potassium chloride Reference Salt Test**
      2.2.1. ***Pimephales promelas* data**
      2.2.2. ***Ceriodaphnia dubia* data**
   2.3. **Literature Cited**
3. **Raw Data Bench Sheets**
   3.1. **Initial observations (page 1)**
   3.2. **Zero hour Observations (page 1)**
   3.3. **Twenty-four (24) hour Observations (page 1)**
   3.4. **Forty-eight (48) hour Observations (page 1)**
   3.5. **Survival Data Table (page 2)**
   3.6. **Test Comments (page 3)**
4. **Chain of Custody**
5. **MO DNR "Whole Effluent Toxicity (WET) Test Report (Form 780-1899)**

Environmental Analysis South, Inc.
4000 East Jackson Blvd. • Jackson, MO 63755 • 573-204-8817 • Fax 573-204-8818

REPORT OF ACUTE TOXICITY TESTING
LaGrange Wastewater Treatment Plant
OUTFALL 001 (24 hr composite) AEC = 9.1%
MO-0041203
EAS LOG# 1208024
July 28, 2010 through July 30, 2010

1. REPORT SUMMATION:

1.1. Single Dilution Data Summation

	Pimephales promelas Acute Toxicity Test	*Ceriodaphnia dubia* Acute Toxicity Test
Survival in the Effluent at 48 Hours	100%	100%
Survival in the Reconstituted Control (RC) at 48 Hours	100%	100%
Survival in the Upstream Control (UC) at 48 Hours	100%	100%
Statistical Results Comparing the Survival Data of the Effluent with the Control (arc sine square root transformation)	No Significant Difference at alpha = 0.05 **PASS**	No Significant Difference at alpha = 0.05 **PASS**

* Indicates a significant difference at alpha = 0.5 between effluent and control survival data.

Conclusion: The mortality observed with both species was determined not to be significantly different than that observed in the control sample. Based on these results the outfall **passed** the whole effluent toxicity test with both indicator species.

Approved by _____
Sara C. Shields, Chemist

Environmental Analysis South, Inc.
4000 East Jackson Blvd. • Jackson, MO 63755 • 573-204-8817 • Fax 573-204-8818

REPORT OF ACUTE TOXICITY TESTING
LaGrange Wastewater Treatment Plant
OUTFALL 001 (24 hr composite) AEC = 9.1%
MO-0041203
EAS LOG# 1208024
July 28, 2010 through July 30, 2010

2. TEST METHOD SUMMARY

2.1. TEST CONDITIONS AND METHODS:

	Ceriodaphnia dubia:	*Pimephales promelas:*
Test duration:	48 hours	48 hours
Temperature:	24 - 26 degree Celsius	24 - 26 degree Celsius
Light quality:	Ambient laboratory illumination	Ambient laboratory illumination
Photoperiod:	16 hour light, 8 hours dark	16 hour light, 8 hours dark
Control Water:	Moderately Hard Reconstituted Water	Moderately Hard Reconstituted Water
Dilution Water:	Upstream Water - If unavailable or toxic, then control water will be used.	Upstream Water - If unavailable or toxic, then control water will be used.
Size of test vessel:	30 milliliters	250 milliliters
Volume of test solution:	15 milliliters	200 milliliters
Age of test organisms:	<24 hours	1 -14 days (all same age)
Number of organisms/test vessel:	5	10
Number of replicates/concentration:	4	4
Number of organisms/concentration:	20	40 for a single dilution test and 20 for a multiple dilution test
Feeding regime:	None (fed prior to test)	None (fed prior to test)
Aeration:	None	None
Test acceptability criterion:	90% or greater survival in controls	90% or greater survival in controls

The methodology used for the chemistry data was taken from the *Standard Methods for the Examination of Water and Wastewater*, 18th edition (1992). The exception was hardness, which was determined using a Hach EDTA titration test kit. The toxicity tests follow guidelines laid out in the permittee's NPDES permit and were conducted according to EPA approved methods (USEPA 2002).

All test organisms were cultured according to EPA approved methods (USEPA 2002). The *Ceriodaphnia dubia* and the *Pimephales promelas* were obtained from C-K Associates Inc. located in Baton Rouge, Louisiana and shipped overnight for use in the whole effluent toxicity test.

Environmental Analysis South, Inc.
4000 East Jackson Blvd. • Jackson, MO 63755 • 573-204-8817 • Fax 573-204-8818

REPORT OF ACUTE TOXICITY TESTING
LaGrange Wastewater Treatment Plant
OUTFALL 001 (24 hr composite) AEC = 9.1%
MO-0041203
EAS LOG# 1208024
July 28, 2010 through July 30, 2010

2.2. REFERENCE TOXICITY TEST:

Environmental Analysis South performs monthly reference toxicity tests. The most recent reference test was initiated on July 7, 2010 using KCL Lot #41713. Following are the results:

2.2.1. ***P. promelas*** - 48 hr. Acute Test – LC_{50} = 1.122 g/l 95%CI (0.821-1.423 g/l)
EAS %CV = 13.4%
National Warning Limits (75th percentile) = 19%CV
National Control Limits (90th percentile) = 33%CV

2.2.2. ***C. dubia*** - 48 hr. Acute Test – LC_{50} = 0.467 g/l 95%CI (0.261-0.673g/l)
EAS %CV = 22.1%
National Warning Limits (75th percentile) = 29%CV
National Control Limits (90th percentile) = 34%CV

2.3. LITERATURE CITED:

1. APHA. 1992. *Standard methods for the examination of water and wastewater*, 18th Ed. American Public Health Association, Washington, D.C
2. USEPA. 2002. *Methods for measuring the acute toxicity of effluents and receiving waters to freshwater and marine organisms*, 5th Ed. EPA-821-R-02-012
3. USEPA 2000. *Understanding and Accounting for Method Variability in Whole Effluent Toxicity Applications under the National Pollutant Discharge Elimination System, (Table B-2).* June 2000. EPA 833-R-00-003.

WHOLE EFFLUENT TEST conducted in accordance with US EPA 600/4-90/027
Fifth Edition October 2002

CLIENT NAME:	LaGrange Wastewater Treatment Plant, Outfall 001, 24 hr composite
NPDES NUMBER:	MO-0041203
TYPE OF METHOD:	single dilution, 48 hrs, PP & CD, AEC=9.1%
DATE & TIME OF COLLECTION:	07/26/10 - 07/27/10 by City of LaGrange
DATE & TIME OF SUBMISSION:	07/28/10 0905 hrs by Fed Ex

Upstream: Mississippi River
Collected: 07/27/10 by City of LaGrange

INITIAL OBSERVATIONS	DATE	TIME	ANALYST	QC LOT	QC EXP VALUE	INT EFFL	INT UC	INT RC
LOG NUMBER / ID NUMBER						1208024	1208024A	3094
pH - SU	07/28/10	0915 hrs	SCS	SB114 (8.8-9.2)	8.87	7.73	7.89	7.99
TEMPERATURE °C RECEIVED	07/28/10	0915 hrs	SCS	EAS 106		6	6	25
SPECIFIC CONDUCTANCE umhos	07/28/10	0915 hrs	SCS	ERA P176-506(514-570)	558	836	276	252
HARDNESS - ppm	07/28/10	0915 hrs	SCS	ERA P170-507(107-134)	120	280	140	80
CHLORINE - ppm	07/28/10	0915 hrs	SCS	tap water	+	<0.04	<0.04	<0.04
DISSOLVED OXYGEN - ppm	07/28/10	0915 hrs	SCS	cal@840		6.9	6.4	8.4
TOTAL ALKALINITY - ppm	07/28/10	1600 hrs	SCS	ERAP177-506(45.3-53.2)	49.1	282	102	57.5
INITIAL AMMONIA - ppm	08/03/10	0900 hrs	JPC	EAS #1981 (8-12)	10.6	0.103	<0.05	<0.05
TOTAL DISSOLVED SOLIDS -ppm								

0 HOUR OBSERVATIONS	DATE	TIME	ANALYST	QC LOT	QC EXP VALUE	RC	UC	100%	50%	25%	12.50%	6.25%	9.1%AEC
pH - SU	07/28/10	1100 hrs	SCS	SB114 (8.8-9.2)	8.87	7.95	8.00						8.11
TEMPERATURE °C	07/28/10	1100 hrs	SCS	EAS 106		25	25						25
SPECIFIC CONDUCTANCE umhos	07/28/10	1100 hrs	SCS	ERA P176-506(514-570)	558	253	272						303
DISSOLVED OXYGEN - ppm	07/28/10	1100 hrs	SCS	cal@840		8.6	6.7						8.3

24 HOUR OBSERVATIONS - PP	DATE	TIME	ANALYST	QC LOT	QC EXP VALUE	RC	UC	100%	50%	25%	12.50%	6.25%	9.1%AEC
pH - SU	07/29/10	1100 hrs	SCS	SB114 (8.8-9.2)	8.9	7.78	8.33						7.98
TEMPERATURE °C	07/29/10	1100 hrs	SCS	EAS 106		25	25						25
SPECIFIC CONDUCTANCE umhos	07/29/10	1100 hrs	SCS	ERA P176-506(514-570)	568	272	282						309
DISSOLVED OXYGEN - ppm	07/29/10	1100 hrs	SCS	cal@840		7.1	6.6						6.7
48 HOUR OBSERVATIONS - PP	**DATE**	**TIME**	**ANALYST**	**QC LOT**	**QC EXP VALUE**	**RC**	**UC**	**100%**	**50%**	**25%**	**12.50%**	**6.25%**	**9.1%AEC**
pH - SU	07/30/10	1100 hrs	SCS	SB114 (8.8-9.2)	8.8	7.14	7.37						7.49
TEMPERATURE °C	07/30/10	1100 hrs	SCS	EAS 106		25	25						25
SPECIFIC CONDUCTANCE umhos	07/30/10	1100 hrs	SCS	ERA P176-506(514-570)	567	292	284						315
DISSOLVED OXYGEN - ppm	07/30/10	1100 hrs	SCS	cal@840		7.0	6.6						6.8
FINAL AMMONIA - ppm				EAS #2375 (8-12)									

24 HOUR OBSERVATIONS - CD	DATE	TIME	ANALYST	QC LOT	QC EXP VALUE	RC	UC	100%	50%	25%	12.50%	6.25%	9.1%AEC
pH - SU	07/29/10	1100 hrs	SCS	SB114 (8.8-9.2)	8.9	7.80	8.30						8.20
TEMPERATURE °C	07/29/10	1100 hrs	SCS	EAS 106		25	25						25
SPECIFIC CONDUCTANCE umhos	07/29/10	1100 hrs	SCS	ERA P176-506(514-570)	568	271	282						378
DISSOLVED OXYGEN - ppm	07/29/10	1100 hrs	SCS	cal@840		7.3	7.2						7.1
48 HOUR OBSERVATIONS - CD	**DATE**	**TIME**	**ANALYST**	**QC LOT**	**QC EXP VALUE**	**RC**	**UC**	**100%**	**50%**	**25%**	**12.50%**	**6.25%**	**9.1%AEC**
pH - SU	07/30/10	1100 hrs	SCS	SB114 (8.8-9.2)	8.8	7.71	8.30						8.12
TEMPERATURE °C	07/30/10	1100 hrs	SCS	EAS 106		25	25						24
SPECIFIC CONDUCTANCE umhos	07/30/10	1100 hrs	SCS	ERA P176-506(514-570)	567	270	289						327
DISSOLVED OXYGEN - ppm	07/30/10	1100 hrs	SCS	cal@840		8.0	8.7						7.4
FINAL AMMONIA - ppm				EAS #2375 (8-12)									

Approved by: [illegible]

Date: [illegible]

WHOLE EFFLUENT TEST conducted in accordance with US EPA 600/4-90/027
Fifth Edition October 2002

LaGrange Wastewater Treatment Plant, Outfall 001, 24 hr composite **EAS LOG# 1208024**

Date Test Began: July 28, 2010 **Time Test Began:** 1100 hrs **Analyst 1:** DFW
Analyst 2: KJR
Date Test Finished: July 30, 2010 **Time Test Finished:** 1100 hrs **Analyst 3:** SCS

P. promelas (PP) **AGE:** 6 days **HATCH NUMBER:** 8345 c-k

	RC	UC	100%	50%	25%	12.50%	6.25%	9.1%AEC
PERIOD	ALIVE	ALIVE	ALIVE	ALIVE	ALIVE	ALIVE	ALIVE	ALIVE
0 HR-PP	10,10,10,10	10,10,10,10						10,10,10,10
24 HR-PP	10,10,10,10	10,10,10,10						10,10,10,10
48 HR-PP	10,10,10,10	10,10,10,10						10,10,10,10

Ceriodaphnia dubia (CD) **AGE:** <24 hours **HATCH NUMBER:** 2195 c-k

	RC	UC	100%	50%	25%	12.50%	6.25%	9.1%AEC
PERIOD	ALIVE	ALIVE	ALIVE	ALIVE	ALIVE	ALIVE	ALIVE	ALIVE
0 HR-CD	5,5,5,5	5,5,5,5						5,5,5,5
24 HR-CD	5,5,5,5	5,5,5,5						5,5,5,5
48 HR-CD	5,5,5,5	5,5,5,5						5,5,5,5

Approved by: Date: 08/05/2010

WHOLE EFFLUENT TEST conducted in accordance with US EPA 600/4-90/027
Fifth Edition October 2002

LaGrange Wastewater Treatment Plant, Outfall 001, 24 hr composite EAS#: 1208024

Notes & Comments

Dilution made using laboratory reconstituted control due to concerns caused by turbidity of the upstream control

Prepared by: [illegible]

Date: 08/05/2010

Single 9/1/10

SAMPLE CHAIN OF CUSTODY RECORD

ENGINEERING SURVEYS & SERVICES
1113 Fay Street * Columbia, Missouri 65201 * (573) 449-2646
802 El Dorado Drive * Jefferson City, Missouri 65101 * (573) 636-3303
1175 W. Main Street * Sedalia, Missouri 65301 * (660) 826-8618

Sample ID	Date Collected	Tests Requested	Sample Container	Preserv.	Comments
City of LaGrange Effluent SN 9950	26 Jul 10 to 27 Jul 10	1208024 W.E.T. test	4-1000g	NP	temp rec'd = 6°C SCS
Upstream	27 Jul 10	1208024-A dilutions	4-1000g	NP	temp rec'd = 6°C SCS

Sample Collected By _____ Company/Organization Engineering Surveys & Services

Date/Time _____ Address Columbia, Mo

Samples Relinquished By	Samples Received By	Date
Linda L Adam		27 Jul 10
	[illegible]	7/28/10 905 Fed Ex

MISSOURI DEPARTMENT OF NATURAL RESOURCES
WATER PROTECTION PROGRAM - P.O. BOX 176, JEFFERSON CITY MO, 65102

WHOLE EFFLUENT TOXICITY (WET) TEST REPORT

(TO BE ATTACHED TO WET TESTS FOR SUBMISSION TO THE REGULATORY AUTHORITY)

PART A – TO BE COMPLETED IN FULL BY PERMITTEE

FACILITY NAME LaGrange Wastewater Treatment Plant	DATE & TIME COLLECTED EFFLUENT 07/26/10 - 07/27/10 UPSTREAM 07/27/10
PERMIT NUMBER MO-0041203	PERMIT OUTFALL NUMBER Outfall # 001
COLLECTOR'S NAME City of LaGrange Mike Henderson	
RECEIVING STREAM COLLECTION SITE AND DESCRIPTION Mississippi River 200yds up-stream By Boat Dock from out Fall001	
PERMIT ALLOWABLE EFFLUENT CONCENTRATION (AEC) 9.1%	EFFLUENT SAMPLE TYPE (CHECK ONE) ☒ 24HR COMPOSITE ☐ GRAB ☐ OTHER
SAMPLE NUMBER EFFLUENT 1208024 UPSTREAM 1208024A	UPSTREAM SAMPLE TYPE (CHECK ONE) ☐ 24HR COMPOSITE ☒ GRAB ☐ OTHER
PERMITTED EFFLUENT DAILY MAXIMUM LIMITATION FOR CHLORINE ____ mg/L	PERMITTED EFFLUENT DAILY MAXIMUM LIMITATION FOR AMMONIA ____ mg/L

PART B – TO BE COMPLETED IN FULL BY PERFORMING LABORATORY

PERFORMING LABORATORY Environmental Analysis South, Inc.	TEST TYPE Acute Static Non renewal Test Single Dilution	
FINAL REPORT NUMBER MO_1208024	TEST DURATION 48 hour	
DATE OF LAST REFERENCE TOXICANT TESTING July 7, 2010	TEST METHOD Methods for Measuring the Acute Toxicity of Effluents and Receiving Waters to Freshwater and Marine Organisms	
DATE AND TIME SAMPLES RECEIVED AT LABORATORY 07/28/10 0905 hrs by Fed Ex	TEST START DATE AND TIME 07/28/10 1100 hrs	TEST END DATE AND TIME 07/30/10 1100 hrs
SAMPLE DECHLORINATED PRIOR TO ANALYSIS? ☐ YES ☒ NO EFFLUENT ____ UPSTREAM ____	TEST ORGANISM #1 AND AGE Pimephales promelas 6 days	TEST ORGANISM #2 AND AGE Ceriodaphnia dubia < 24 hours
SAMPLE FILTERED[1] PRIOR TO ANALYSIS? ☐ YES ☒ NO EFFLUENT ____ UPSTREAM ____	90% OR GREATER SURVIVAL IN SYNTHETIC CONTROL? ☒ YES ☐ NO	DILUTION WATER USED TO ACHIEVE AEC reconstituted control
FILTER MESH SIEVE SIZE[2] None	EFFLUENT ORGANISM #1 % MORTALITY AT AEC 0 %	EFFLUENT ORGANISM #2 % MORTALITY AT AEC 0 %
SAMPLE AERATED DURING TESTING? ☐ YES ☒ NO	UPSTREAM ORGANISM #1 % MORTALITY RC=0 %	UPSTREAM ORGANISM #2 % MORTALITY RC=0 %
pH ADJUSTED? ☐ YES ☒ NO EFFLUENT ____ UPSTREAM ____	TEST RESULT AT AEC FOR ORGANISM #1 ☒ PASS ☐ FAIL	TEST RESULT AT AEC FOR ORGANISM #2 ☒ PASS ☐ FAIL

MINIMUM REQUIRED ANALYTICAL RESULTS FOR THE 100% EFFLUENT SAMPLE

PARAMETER	RESULT	METHOD	WHEN ANALYZED
Temperature °C	6	SM18 2550B stored at 4 degree C until test setup	07/28/10 0915 hrs
pH Standard Units	7.73	SM18 4500-H B	07/28/10 0915 hrs
Conductance µMohs	836	SM18 2510B	07/28/10 0915 hrs
Dissolved Oxygen mg/L	6.9	SM18 4500-O G	07/28/10 0915 hrs
Total Residual Chlorine mg/L	<0.04	SM18 4500-Cl G	07/28/10 0915 hrs
Unionized Ammonia mg/L	0.103x0.03<0.010	SM18 4500-NH3 F @ 25 degree C	08/03/10 0900 hrs
*Total Alkalinity mg/L	282	SM18 2320B	07/28/10 1600 hrs
*Total Hardness mg/L	280	SM18 2340 C	07/28/10 0915 hrs

*Recommended by USEPA guidance, not a required analysis.

[1] Samples shall only be filtered if indigenous organisms are present that may be confused with, or attack, the test organisms.
[2] Filters shall have a sieve size of 60 microns or greater.

CONTINUED ON PAGE 2

WHOLE EFFLUENT TOXICITY (WET) TEST REPORT

(TO BE ATTACHED TO WET TESTS FOR SUBMISSION TO THE REGULATORY AUTHORITY)

MINIMUM REQUIRED ANALYTICAL RESULTS FOR THE 100% UPSTREAM SAMPLE[3]

PARAMETER	RESULT	METHOD	WHEN ANALYZED
Temperature °C	25	SM18 2550B stored at 4 degree C until test setup	07/28/10 0915 hrs
pH Standard Units	7.99	SM18 4500-H B	07/28/10 0915 hrs
Conductance µMohs	252	SM18 2510B	07/28/10 0915 hrs
Dissolved Oxygen mg/L	8.4	SM18 4500-O G	07/28/10 0915 hrs
Total Residual Chlorine mg/L	<0.04	SM18 4500-Cl G	07/28/10 0915 hrs
Unionized Ammonia mg/L	<0.05x0.05<0.010	SM18 4500-NH3 F @ 25 degree C	08/03/10 0900 hrs
*Total Alkalinity mg/L	57.5	SM18 2320B	07/28/10 1600 hrs
*Total Hardness mg/L	80	SM18 2340 C	07/28/10 0915 hrs

*Recommended by USEPA guidance, not a required analysis.

PRELIMINARY TEST ACCEPTABILITY MATRIX (FOR USE BY PERMITTEE IN DETERMINING TEST VALIDITY)

PERMIT ALLOWABLE EFFLUENT CONCENTRATION (AEC): As indicated on permit. Test is invalid otherwise.

EFFLUENT SAMPLE TYPE: As indicated on permit. Test is invalid otherwise.

TEST TYPE: Acute Static Non-Renewal Test or other as indicated on permit. Test is invalid otherwise.

TEST DURATION: Forty-eight (48) hours or as indicated on permit. Test is invalid otherwise.

TEST ORGANISMS: As indicated on permit. Test is invalid otherwise.

DILUTION WATER USED TO ACHIEVE AEC: Upstream receiving water required if available.

TEST METHOD: The only acceptable method is the ***most current edition*** of Methods for Measuring the Acute Toxicity of Effluents and Receiving Waters to Freshwater and Marine Organisms, or other as specifically assigned by EPA for determining NPDES compliance. Test is invalid otherwise.

TEST START DATE & TIME: Unless otherwise specified in writing by EPA, if >36 hours lapse between collection and initiation, test is invalid.

FILTER MESH SIEVE SIZE: Unless otherwise specified in writing by EPA, if sieve size is smaller than 60 microns, test is invalid.

90% OR GREATER SURVIVAL IN LABORATORY CONTROL(S) (Y/N): If NO, test is invalid.

PARAMETER	RESULT	NOTES	WHEN ANALYZED
Temperature °C	0 - 6	Unless received by the laboratory on the same day as collected, values outside this range invalidate the test.	Upon receipt

[3] Where no upstream control is available, enter results from laboratory or synthetic control.

MAYOR RONALD L. POWERS
CITY ADMINISTRATOR:
CITY COUNCIL: CONNI BLESSING
PAUL GUILFOYLE, MIKE HUDNUT
MIKE LOWE, JOHN SOLTER

CITY OF LAGRANGE

P.O. BOX 266
118 SOUTH MAIN
LAGRANGE, MO 63448
"VILLE DES GENS AMICALS"

CITY ATTORNEY: JEFF CURL
CITY CLERK: PATTY SPINDLER
FINANCE: KIM SCHNEIDER
PHONE: 573-655-4301
FAX: 573-655-4930

RECEIVED
JUN 17 2013
WATER PROTECTION PROGRAM

June 12, 2013

Dear Permit Writers,

I am writing you this letter today for the City of LaGrange Waste Water Plant. We would like to renew our permit MO-0041203, it expires January 8, 2014.

Enclosed in this packet you will find the following:
1. Form B-2 with Part A, B, C and E.
2. Topographic Map of the plant and surrounding properties.
3. Process Flow Diagram of the Plant and description of the plant process.
4. Bypass explanation.
5. Spreadsheet of all the monthly data collected for the past 4½ years.
6. The last 3 Wet Test Reports.

I believe I have everything you have requested. This is the first time I have ever done this so it has been a big learning experience for me. Please call me if you need something else and I will do my best to get it to you.

Thank you.

Mike Henderson
Waste Water Superintendent
City of LaGrange
P.O. Box 266
LaGrange, MO 63448
1-573-655-0212 Plant
1-573-655-4930 Fax
lagrangewwp@centurytel.net