RECEIVED
APR 22 2016
Water Protection Program

SANITARY SEWERS

SECTION 6500 - SANITARY SEWERS

CITY OF LEE'S SUMMIT, MISSOURI DESIGN CRITERIA

STATE OF MISSOURI
PAUL A. MILLER
NUMBER E-28140
REGISTERED PROFESSIONAL ENGINEER
4/19/16

6501 DESIGN CRITERIA

A. General

1. The design standards presented in the City of Lee's Summit Design Criteria are the minimum standards to be followed in the design and construction of the Lee's Summit public sewerage system. These standards are not intended to be used as a substitute for actual construction specifications and design computations.

2. For new development (including infill or redevelopment), the existing sanitary sewers shall have adequate capacity to accommodate additional development with no adverse impacts on the existing system or customers.

3. Where sewer lines are extended into the interior of a lot, the sewer line shall not be considered a public sewer main.

4. Pipe Designations

   Force Mains: Force mains are classified as mains transporting wastewater from a pumping station to a sanitary sewer manhole. Force mains are shown in the City's currently-adopted Master Plan. Force mains shall not be tapped.

5. Grid System

   Sanitary Sewers shall be generally located as shown in the City's currently adopted Master Plan.

6. The Missouri Department of Natural Resources (MDNR) must review all sanitary sewer plans after they are reviewed by the City. No construction can take place until MDNR comments are incorporated.

B. Design Factors

1. Sewerage systems shall be sized to provide for the entire watershed in the City's currently adopted Comprehensive Plan and in accordance with the Wastewater Master Plan based upon ultimate growth.

2. The City of Lee's Summit recognizes the impact that extraneous flows (infiltration and inflow) have on sewer capacities.

C. Capacities

1. Peak wastewater flows shall be used to design sanitary sewers for non-residential lands of greater than 100 acres and all residential lands and shall consist of the following three components:

SANITARY SEWERS

a. Peak Base Flow (PBF): Base flow is defined as the normal wastewater flow generated in the sanitary sewer system exclusive of infiltration and inflow.

   i. The peak base flow or peak dry weather flow (PDWF) used for residential land in Lee's Summit is 1,500 gallons per day per acre (gpd/ac).

   ii. The peak base flow to be used for non-residential land in Lee's Summit is calculated using the equivalent dwelling unit (EDU) methodology described in Paragraph 6501.C.2.

b. Peak Infiltration: Infiltration is defined as groundwater entering the system through defective pipes, pipe joints, and manholes. Peak infiltration is considered the maximum infiltration that occurs during the highest groundwater level period of the year.

   i. The peak infiltration used for residential land in Lee's Summit is 500 gpd/ac.

   ii. The peak infiltration to be used for non-residential land in Lee's Summit is 250 gpd/ac.

c. Peak Inflow: Inflow is defined as rainfall-related water entering the collection system from sources such as private building sewers, down spouts, foundation drains, sump pumps, and cross connections.

   i. Peak inflow is determined by the following equation:

$$Q = KiA$$

   where

   Q = peak inflow, cubic feet per second (cfs)
   (1.0 cfs = 646,317 gpd)
   K = inflow factor
   i = rainfall intensity that corresponds to a tributary area's time of concentration, inch per hour (iph)
   A = tributary area, acres (ac)

   ii. Lee's Summit shall use a K = 0.006 and K = 0.003 for residential and non-residential land, respectively, and a 50-year storm event. Inflow is directly influenced by the intensity and duration of a storm event and is not a fixed quantity.

   iii. The time of concentration can be calculated by the following equation:

$$T_c = 18.56\,(A)^{0.2524}$$

   where

   T_c = time of concentration, minutes (min)
   A = tributary area, ac

d. The rainfall intensity can be determined using the table below and the tributary area's T_c as calculated above. Use interpolation to calculate rainfall intensities for T_c not listed in the table.

	Time of Concentration (min)									
	5	10	15	30	60	120	180	240	360	600
Year	**Rainfall Intensity (iph)**									
1	4.48	3.53	3.05	2.09	1.41	0.86	0.60	0.47	0.35	0.25
3	5.84	4.77	4.13	2.90	1.93	1.18	0.86	0.69	0.51	0.36
5	6.47	5.34	4.63	3.28	2.17	1.32	0.97	0.79	0.58	0.40
10	7.33	6.12	5.32	3.79	2.50	1.52	1.13	0.93	0.68	0.47
25	8.46	7.16	6.22	4.47	2.93	1.78	1.34	1.12	0.80	0.56
50	9.32	7.94	6.91	4.98	3.26	1.98	1.50	1.26	0.90	0.62
75	9.82	8.40	7.31	5.27	3.46	2.10	1.59	1.34	0.96	0.66
100	10.18	8.72	7.59	5.49	3.59	2.18	1.65	1.39	1.00	0.69

e. Peak Flow = Peak Base Flow + Peak Infiltration + Peak Inflow

2. For non-residential lands greater than 8 acres and less than 100 acres in total area, sewer capacity shall be calculated using the EDU methodology described below:

a. An EDU is a ratio of the flow produced by a particular land use compared to the flow produced by a single residential housing unit. A single residential unit is 1.0 EDU and produces 300 gallons per day (gpd) of peak daily flow. All other land uses are given EDU values that are a ratio to that 1.0 EDU value and are based on the anticipated flow rate.

b. Table 1 lists common types of non-residential developments. For each type of source, an EDU value is assigned based on the parameters of the building. Each EDU is estimated to produce 300 gpd of peak daily flow, which is based on the assumption of an average of 100 gpd per capita and 3 capita per residence. Calculating the total number of EDUs for a site establishes a value for the peak base flow.

c. Using the EDU values in Table 6501-1 and the parameters defined for each source, the following formula shall be used to estimate the peak base flow for non-residential development ($PBF_{Non\text{-}res}$):

$$PBF_{Non\text{-}res} = EDU * \text{Building Area} * \text{Stories} * 300 \text{ gpd}$$

where

$PBF_{Non\text{-}res}$ = Peak base flow (gpd)

EDU = Equivalent development units per 1000 ft^2 (see Table 6501-1)

Building Area = Building footprint area in thousands of square feet (1000 ft^2)

Stories = Total building stories (see Table 6501-2)

This formula only applies to the sources listed in Table 6501-1 that have "per 1000 ft^2" indicated as the parameter. To calculate the $PBF_{Non\text{-}res}$ for other sources listed in the table, multiply the EDU for the parameter by the appropriate number, then multiply it by 300 gpd (e.g., an 100-bed hospital would have a $PBF_{Non\text{-}res}$ = [0.8 EDU/bed x 100 beds] * 300 gpd = 24,000 gpd).

d. Peak infiltration and peak inflow can be calculated using the values and equation for non-residential land found in Paragraph 6501.C.1. Alternatively, Figure 6501-3 shows a graph of the combined peak infiltration and inflow values. Figure 6501-3 shall not be used for areas less than 8 acres. Note that Figure 6501-3 **does not** include the peak base flow.

Peak Flow = $PBF_{Non\text{-}res}$ + Peak Infiltration + Peak Inflow

3. For non-residential lands greater than 100 acres or smaller than 8 acres, the residential land method shall be used to calculate sewer capacity, as described in Paragraph 6501.C.4.

4. Sewer capacity for residential land shall be calculated using the equations shown in Paragraph 6501.C.1 or the design curves shown in Figures 6501-1 and 6501-2. For example, in Figure 6501-1, a tributary area of 450 acres corresponds to a design flow of 0.019 cfs/ac, or 5.53 million gallons per day (MGD). This design flow shall be used to size the sewer pipe.

D. Hydraulic Design

1. Minimum Pipe Size: No public sewer shall be less than 8 inches in diameter. The downstream sewer pipe shall have the same or larger nominal diameter as the upstream pipe. Building sewers and building sewer stubs for industrial, commercial, and residential development shall not be less than 4 inches in diameter.

2. Hydraulic Grade

a. Average Velocity: Sewers shall be designed to be free flowing with the hydraulic grade below the top of pipe and above the hydraulic grade line of the existing downstream system into which the sewer discharges, including the Little Blue Valley Sewer District (LBVSD) and Middle Big Creek Sub-District (MBCSD), where applicable, and with hydraulic slopes sufficient to provide an average velocity when running full of not less than 2.25 feet per second (fps). Computations of velocity of flow shall be based on the following Manning's formula.

b. Manning's Formula:

$$V = \left(\frac{1.486}{n}\right) R^{2/3} S^{1/2}$$

$$Q = \left(\frac{1.486}{n}\right) A R^{2/3} S^{1/2}$$

where

V = Velocity (fps)
Q = Pipe flow capacity (cfs)
A = Inside area of pipe (square feet, ft^2)
R = Hydraulic radius (feet, ft)
S = Pipe slope (ft/ft)
n = Pipe roughness coefficient

n values: Values for n shall be according to manufacturers' recommendations, or as follows:
Polyvinyl chloride (PVC) – 0.014
Ductile iron pipe (DIP) – 0.015
High-density polyethylene (HDPE) –0.015

c. Maximum Velocity:

i. The maximum permissible velocity at average flow shall be 15 fps. Average flow is defined as peak base flow plus peak infiltration, or 2,000 gpd/ac.

ii. Drop manholes shall be provided to break the steep slopes to limit the velocities to 15 fps in the connecting sewer pipes between manholes (see Paragraph 6501.H.5). Where drop manholes are impracticable for reduction of velocity, the sewer shall be fitted with concrete restraints at 15 foot intervals along the slope to limit movement of the pipe or shall be restrained joint pipe.

d. Minimum Slopes: The following are minimum slopes in feet per hundred feet to be provided for pipes flowing full depth to one-fourth of full depth:

Sewer Size (inch)	Slope (ft per 100 ft)
8	0.60
10	0.42
12	0.33
15	0.24
18	0.19
21	0.16
24	0.13
30	0.13
36	0.13
42	0.13

e. Hydraulic Grade Line: Calculations of the hydraulic grade line (HGL) for the peak base flow and peak infiltration and inflow shall be submitted to the City with the engineering plans. The Design Engineer shall consider the HGL of the LBVSD or MBCSD interceptor in their design. Calculations shall also consider the HGLs of basins, pump stations, wet wells and any other storage facilities, at maximum capacity, that may reasonably be expected to affect the functioning of the designed system. HGLs shall be shown on the Engineering Plans and revised as needed on the record drawings.

f. Smaller Sewer Joining Larger Sewer: When a smaller sewer joins a large one, the invert of the larger sewer should be lowered sufficiently to maintain the same energy gradient. An approximate method for accomplishing this is to place the 0.8 depth point of both sewers at the same elevation.

g. Minimum Drop across Inverts: There shall be a minimum drop of 0.2 feet between the upstream and downstream sewer pipe inverts when the deflection angle between the incoming and outgoing pipes is less than 45°. Provide a minimum drop of 0.5 feet between the upstream and downstream sewer pipe inverts when the angle between the incoming and outgoing pipes is greater than 45°.

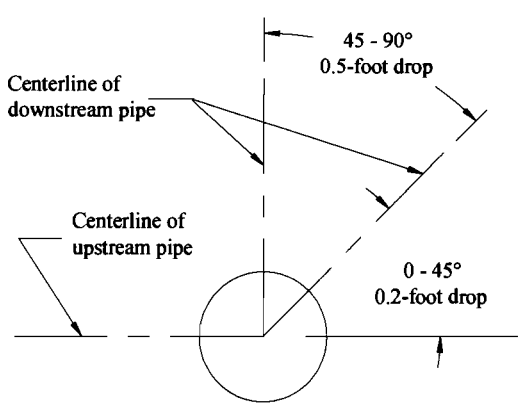

E. Sewer Mains

1. Location

a. Within or Adjacent to Right of Way: When sewer mains are placed in or adjacent to the right-of-way (R/W), sewers shall be located as follows:

i. Sanitary sewer mains shall be located at least 5 feet from back of curb except at bulbs of cul-de-sacs, and with an embankment slope of 3:1 or flatter.

ii. Street crossings shall be bored under existing streets.

iii. All boring excavations shall be located no closer than 2 feet from the back of the curb and with a minimum depth not less than 36 inches from the finished grade to the top of the sewer pipe.

iv. Where sidewalks will be placed on the same side of the street as the sewer main, the sewer main shall be located at least four feet from the sidewalk outside the right of way in a utility easement.

b. Away from Right of Way: When placed away from and outside the right of way, sewer mains shall be located as follows:

i. Sewer mains shall be installed in easements with an embankment slope of 3:1. or flatter.

ii. Sewer mains shall not be located in the rear of the property

iii. Sewer mains shall be located in the center of the easement.

c. Separation from Other Pipes:

i. Factors: The following factors should be considered in providing adequate separation:

(a) Materials and type of joints for water and sewer mains.
(b) Soil conditions.
(c) Service and branch connections into the water main and sewer main.
(d) Compensating variations in the horizontal and vertical connections.
(e) Space for repair and alterations of water and sewer mains.
(f) Offsetting of mains around manholes and other sewer structures.

ii. Parallel Installation: Sanitary sewers or force mains shall be laid at least 10 feet horizontally from any existing or proposed water main and at least 5 feet horizontally from any storm sewer. The distance shall be measured edge to edge.

iii. Crossings:

(a) Sewer mains crossing water mains shall be laid to provide a minimum vertical clear distance of 18 inches between the outside of the sewer main and the outside of the water main. This shall be the case where the sanitary sewer is either above or below the water main.

(b) At crossings, a full length of sewer pipe shall be located such that both joints will be as far from the water main as possible.

(c) Where conditions prevent the minimum vertical separation set forth above from being maintained, the following shall be applied:

(i) The sewer line shall be laid with ductile iron pipe which shall extend on each side of the crossing to a distance from the water main of at least 10 feet.

(ii) In making such a crossing, a full length of ductile iron pipe must be centered over or under the water main to be crossed so that the joints will be equidistant from the water main.

(d) Provide special structural support for the pipes as necessary.

(e) Minimum crossing angle shall be 45 degrees.

d. Separation from Structures:

i. Manholes and Other Utility Structures:

(a) No sewer main shall be located closer than 10 feet horizontally to any part of water main structures or vaults.

(b) No sewer main be located closer than 5 feet to any part of a storm sewer curb inlet, junction box, or other storm sewer structure.

ii. Buildings: Public sanitary sewer shall be at least 15 feet from any building, but not less than the depth of cover over the sanitary sewer main.

iii. Retaining Walls: Sewer mains shall be located so that maintenance on the sewer main will not jeopardize the structural integrity of the wall. Location shall comply with Section 5700.

e. Drainage Courses and Streams:

i. The location of sewer mains relative to drainage courses and streams shall be designed to comply with Section 5600.

ii. Pipelines crossing drainage courses and streams shall be designed to cross as nearly perpendicular as possible. Pipeline shall be laid on a uniform grade.

iii. Pipelines shall be designed to minimize the number of crossings.

iv. Ductile iron pipe (DIP) with restrained joints shall be used for all drainage courses and stream crossings. The ductile iron pipe shall extend from manhole to manhole.

f. Non-Aerial Crossings:

Depth of Cover: The top of all sewer mains entering or crossing streams shall be at a sufficient depth below the natural bottom of the stream bed to protect the pipeline. The following cover requirements must be met:

(a) When bedrock is less than 24 inches below the bottom of the channel, the pipe shall be trenched into bedrock and shall have at least 12 inches of cover.

(b) When bedrock is 24 or more inches below bottom of channel, the pipe shall have at least 36 inches of cover.

(c) In paved stream channels, the top of the pipeline shall be at least 12 inches below the bottom of the channel pavement.

(d) All non-bore crossings shall be encased in concrete.

g. Aerial Crossings

i. Ductile iron pipe with restrained joints shall be used for all aerial crossings.

ii. Support Structures:

(a) Support shall be provided at all joints in pipe utilized for aerial crossings.

(b) All support structures for stream crossings shall be located in accordance with Section 5600.

iii. Precautions against freezing, such as insulation and increased slope, shall be provided. Expansion jointing shall be provided between aboveground and belowground pipe.

iv. The impact of floodwaters and debris shall be considered in the design of aerial stream crossings. The bottom of the pipe shall be placed no lower than the elevation of the calculated 100-year floodwater elevation.

v. Provide bank stabilization in accordance with Section 5600.

vi. Aerial crossings shall not be allowed for sewer force mains.

2. Slope and Alignment

a. Sewers shall have a uniform slope and horizontal alignment between manholes.

b. The grade lines shown on the profile drawings shall extend from the centerline of the top manhole to the centerline of the bottom manhole.

3. Depths of Bury

a. Maximum depth of sanitary sewer shall be 15 feet.

b. Materials for sanitary sewer mains based on depths of bury, measured from finished grade to the top of the pipe, are given in the table below:

Pipe Size (in)	Depth of Bury (ft)	Pipe Material	PVC	
			SDR	ASTM
4-15	3 - 15	PVC	26	D3034
18-36	3 - 15	PVC	26	D2241

4. Trench Design

a. Minimum Cover: A minimum of 36 inches of cover shall be over the top of the pipe. This minimum cover shall be from the top of the pipe to finished grade as shown below.

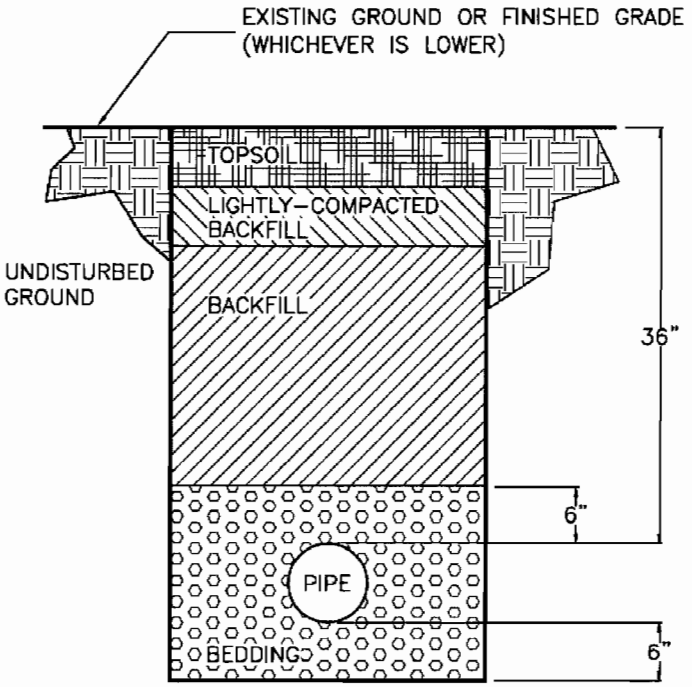

b. Bedding: Bedding aggregate shall be placed from a level 6 inches below the bottom of the pipe to a level 6 inches above the top of the pipe.

c. Backfill

i. See Paragraph 2102.2.C.2.

ii. Backfill of all pipes under roadways, curb and gutter and all other paved areas within the right of way shall consist of flowable backfill as specified in Paragraph 2602.2.H Mix Design Type A. The flowable backfill shall extend 2 feet from back of curb to 2 feet back of curb, up to 18 inches below finished grade. For existing roadways flowable backfill shall be extended to the base of pavement.

d. Trench Checks:

i. Impervious trench checks consisting of flowable backfill as specified in Paragraph 3501.H shall be placed on building sewer stubs, at least 5 feet away from the sanitary sewer main and on each side of a stream crossing.

ii. Trench checks on the building sewer stubs shall extend to the bottom of the trench. Length shall be a minimum of 12 inches. The height of the trench check shall extend 12 inches above the top of the pipe. The width of the trench check shall be the width of the trench.

iii. At drainage course/stream crossings, the trench check shall extend to the bottom of the trench. Length shall be a minimum of 2 feet and width shall be the width of the trench. The height shall extend a minimum of 12 inches above the top of the pipe.

5. Dead End Sewer Mains: All dead end sewer mains, which may be extended in the future, shall be installed to the limits of the platted subdivision such that extensions to the mains to serve adjacent subdivision plats may be connected at the plat boundary. A manhole shall be installed at the plat boundary. Any future pipe connections shall be core-drilled.

6. Pipe Collars: Pipe collars may be used where standard gasketed manhole connections are not possible.

7. Pipe Anchors

a. A minimum number of pipe anchors shall be provided in accordance with the following table. Conditions may require additional anchors as determined by the Design Engineer.

Percent of Grade	Center to Center Max. Spacing (ft)
$20 \leq$ Slope < 35	36
$35 \leq$ Slope <50	24
$50 \leq$ Slope	16

b. The pipe anchor shall extend not less than 1 foot into undisturbed earth on the sides and bottom and 1 foot above top of pipe. In incompressible material, the above

dimensions may be 6 inches each side and bottom. The anchor shall support a joint fitting.

F. Building Sewer Stubs

1. General

a. The building sewer stub extends from the sewer main to the R/W line and shall extend at least 10 feet from the sewer main, as shown below. The building sewer extends from the building to the building sewer stub. Each individual resident or business unit shall be responsible for the ownership and maintenance of the building sewer stub and building sewer.

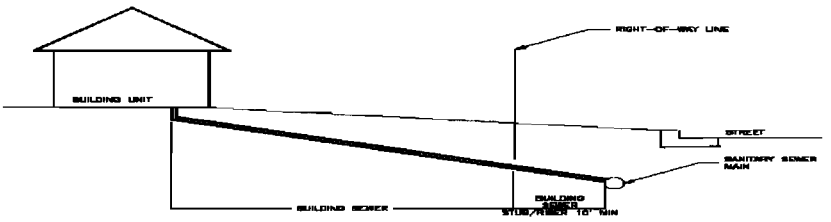

b. Building sewer stubs shall not be installed in pipe sizes 18 inches in diameter or larger.

c. Minimum diameter of building sewer stubs and building sewers shall be 4 inches.

d. Individual gravity building sewer stubs shall not connect directly into manholes.

e. Saddles shall not be permitted to connect building sewer stubs to existing sanitary sewer mains.

f. All building sewer stubs shall be SDR 26 (minimum) PVC.

g. Each individually owned residential or business unit, with the exception of apartments or condominium style properties (where the building sewer stub is in common ground and access is maintained by the property owners' association), shall have a separate building sewer stub. The number of connections shall comply with the City's Code of Ordinances, Section 32-246, Paragraph B.

h. Routing of building sewers shall be as direct as possible to the sewer main.

i. All building sewer stubs shall be shown with proposed stationing on the engineering plans.

j. Individual building sewer stubs shall not be allowed to connect into the public sanitary sewer main if the property of service is not within the corporate limits of the City of Lee's Summit.

2. Wyes for 8- to 15-inch Diameter Pipe: A wye shall be used to connect the building sewer stub to the sanitary sewer main. The wye shall be cut in.

3. Location: Wyes shall be located at least 4 feet from manholes and 4 feet from other wyes.

4. Slope: Building sewer stubs shall be installed in accordance with the current Plumbing Code adopted by the City.

5. In Right-of-Way: Building sewer stubs shall be installed by the Developer. New sewer stubs under streets shall be installed prior to construction of the street.

6. Tracer wire shall be installed along the top of service stubs. The wire shall have HDPE insulation, be no smaller than 12 gauge, and intended for underground applications. The tracer wire shall be green in color. Tracer wires shall terminate at the ground surface inside a tracer box. Tracer box lids shall be green in color. Tracer wire shall be grounded to a minimum one pound magnesium anode at the sewer line.

G. Casing Pipe

1. Casing pipe is required on all bores except building sewer stubs.

2. Pipe Supports:

a. Casing Spacers: Stainless steel casing spacers may be used.

b. Wood Skids: Wood skids are permitted. Annular space between the casing pipe and the carrier pipe shall be filled with sand.

c. Casing Pipe Plugs: The ends of the casing pipe shall be plugged as indicated in Paragraph 3501.N.3.

3. Extent: The extent of the casing pipe shall be as shown below. Consideration shall be given for future road widening.

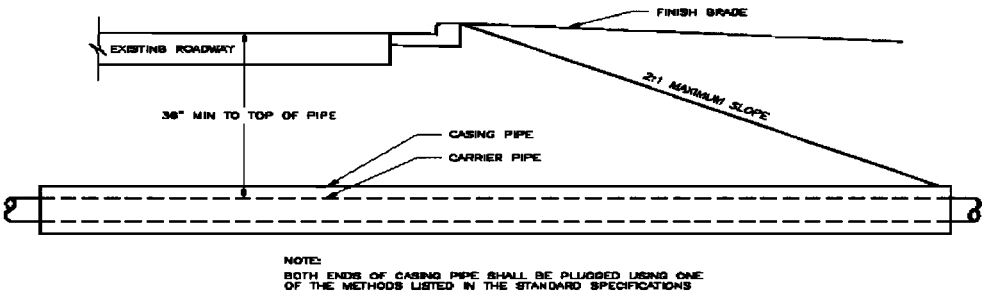

H. Manholes

1. Location

   a. Manholes for access to sewers shall be provided at all intersections with other sanitary sewers, at all points of change in horizontal alignment, at all changes in vertical grade, at all changes in pipe size or material, and at the terminus of the sewer main.

   b. Manholes shall be provided at intervals not exceeding 500 feet on all sewers.

   c. Manholes located in the street R/W should not be under the paved area.

2. Design: Manholes shall be designed and constructed to conform to ASTM C 478 and as shown in the Standard Drawings.

3. Minimum Diameter:

   a. The minimum diameter of the manhole shall be based on sewer diameter and angle of incoming pipes as follows:

Sewer Diameter (in)	**Minimum Manhole Diameter (ft)**
< 24	4
≥24	5

Minimum angle between pipes of same diameter and invert into manholes shall be angles equal to or greater than indicated below. Cores shall be made leaving a minimum of 6" between cores.

	8 Dia. Pipe 12 Dia. Opn. (in) Degrees	10 Dia. Pipe 12 Dia Pipe 15 Dia Opn. (in) Degrees	15 Dia. Pipe 16 Dia. Pipe 20 Dia. Opn. (in) Degrees	18 Dia. Pipe 21 Dia. Pipe 24 Dia. Opn. (in) Degrees	24 Dia. Pipe 28 Dia. Opn. (in) Degrees
4-Foot Dia MH	42	54	65	75	N/A
5-Foot Dia MH	36	42	52	60	68
6-Foot Dia MH	28	36	42	48	56

4. 5' and 6' manholes shall extend to the ground surface with the following options:

   i. A flat lid with cast-in-place manhole ring and cover.

   ii. An eccentric reducer may be used directly below an eccentric cone section. Flat top reducer shall not be allowed.

5. Wall Thickness: A wall thickness not less than one-twelfth of the inside diameter, or 4 inches, whichever is greater, shall be used.

6. Drop Manhole: At manholes where the invert of the inlet sewer is more than 24 inches higher than the invert of the outlet sewer, an outside drop connection shall be provided as shown in the Standard Drawings. Inside drop manholes shall not be allowed.

7. Flat Top Manhole: Any flat top manhole shall be equipped with a cast-in-place manhole ring and cover.

8. Floodwater Elevation: Unless improvements such as street grades will not permit, tops of manholes shall extend a minimum 1'-0" above the calculated 100-year floodwater elevation, provided that such extension shall not exceed 4 feet above final finish grade. Where this requirement results in an exposed manhole more than 4 feet above final finish grade, the manhole shall be equipped with watertight ring and bolt-down cover assembly with neoprene gaskets.

9. Tying a Sewer Main to an Existing Manhole:

   a. The existing manhole wall shall be core drilled.

   b. A flexible pipe-to-manhole connector shall be installed as shown in the Standard Drawings.

   c. On the engineering plans, any existing City manhole should be labeled with the City's manhole number, which can be obtained from the City's sanitary sewer base maps in the Public Works Engineering office. All other manholes shall be labeled as either LBVSD or MBCSD.

10. Adding a Manhole onto an Existing Sewer Main:

    a. The design shall provide that the Contractor cut the existing sewer main, set a pre-cast base onto a 6-inch thick (minimum) crushed rock bedding layer, and insert a sewer pipe through the manhole to connect the existing ends of the sewer main. Both ends shall be connected to the existing sewer with a rigid coupling. The inverts will be poured before the top half of the sewer pipe is cut away. Alternatively, precast inverts may be used for this application. A pumped bypass operation may be used for this application from the existing upstream manhole to the existing downstream manhole.

    b. The use of doghouse manholes shall not be allowed.

    c. On the engineering plans, any existing manhole should be labeled with the City's manhole number. This number can be obtained from the City's sanitary sewer base maps in the Public Works Engineering office.

11. Tying a sewer main to an existing LBVSD or MBCSD manhole, the following shall be completed:

    a. The pipe installation shall be in accordance with the LBVSD Interceptor Connection Manual.

    b. Application for connection shall be made by the City on behalf of the developer prior to connection.

    c. The connection fee shall be paid by the developer to the City of Lee's Summit.

    d. The pipe material connection to the LBVSD or MBCSD manhole shall be ductile iron pipe Class 50.

    e. The developer's contractor shall notify LBVSD of the actual connection construction schedule.

12. Force Main Connections.

    a. New Manhole: An epoxy manhole liner shall be used in the first two new receiving (downstream) manhole interiors to protect the structure from corrosive effects of septic waste.

    b. Existing Manholes: The use of a flexible epoxy manhole liner shall be used in the first two existing receiving (downstream) manhole interiors to protect the structure from corrosive effects of septic waste.

I. Pump Stations

1. The use of Pump stations shall not be allowed, except where indicated in the current Wastewater Master Plan.

2. When Pump stations are indicated in the Wastewater Master Plan, the design shall meet the following minimum requirements:

   a. All equipment supplied shall comply with the City's Wastewater Pump Station Facilities Design Criteria (separate document).

   b. Peak flow rates shall be calculated in accordance with the current design criteria found in Paragraph 6501.C, and shall be based on the entire watershed at ultimate growth in accordance with the City's currently adopted Wastewater Master Plan.

   c. Peak flows shall be handled by pumps or a combination of pumps and an excess flow holding basin (EFHB).

   d. Pumps shall be able to meet required flows with one pump unit out of service.

   e. EFHBs shall be sized in accordance with the Paragraph 6501.K.

   f. The odor control system (e.g., a biofilter) shall be located such that the pumping facility minimizes impact on future development.

   g. Portable pump connection shall accommodate existing City-owned equipment.

   h. Fencing shall be at least six feet high.

   i. Adequate space shall be provided within the fenced enclosure to allow access to all areas for maintenance and repair activities.

   j. A minimum of a twelve-foot wide all-weather access road, capable of accommodating the City's maintenance equipment shall be provided.

   k. Exterior mounted control panels shall be provided with a work area protected from the elements.

J. Low-Pressure Sewer Systems

1. Public low-pressure sewer systems shall not be allowed.

2. When private low-pressure sewer systems are used, the design of the system shall comply with the City's Wastewater Low-Pressure Sewer System Facilities Design Criteria (separate document).

K. Excess Flow Holding Basins (EFHB)

1. Excess flow holding basins shall not be allowed, except where indicated in the current Wastewater Master Plan.

2. When EFHB are used, the design shall meet the following minimum requirements:

a. Peak flow rates shall be calculated in accordance with the current design criteria found in Paragraph 6501.C, and shall be based with the City's currently adopted Wastewater Master Plan.

b. All equipment supplied shall comply with the City's Wastewater EFHB Facilities Design Criteria (separate document).

L. Easements

1. Unified Development Ordinance (UDO): Easements shall be provided in accordance with the requirements of the City's UDO, Article 16. In addition, the following guidelines shall be followed:

   a. Easements shall be a minimum of 10 feet wide when adjacent to the R/W.

   b. Easements shall be a minimum of 15 feet wide when detached from the R/W (i.e. between buildings or across undeveloped areas).

   c. For installations greater than 7 feet deep, easements shall be a minimum of 2 feet wide for every foot of trench depth. For sewer mains not centered within the easement, the distance from the centerline of the pipe to the edge of the easement shall be at least equal to the depth of the pipe.

   d. Easements shall be a minimum of 15 feet wide around the bulb of the cul-de-sac adjacent to the right-of-way.

2. Temporary construction easements shall be acquired as necessary to complete the installation of the project.

3. Legal Descriptions: Legal descriptions shall include drawings indicating the point of commencement, the point of beginning, line bearings, line distances, the ending point, and the area described. The drawings shall be on letter size paper. Legal descriptions and drawings shall be sealed by a Land Surveyor registered in the State of Missouri and meet the filing requirements of Jackson and/or Cass County. All documentation shall be formatted to meet the requirements of the County Recorder. Aerial photographs shall not be used in the background of the drawing.

4. Sewer Mains Extending beyond Platted Areas: In the event that a sewer main needs to extend beyond the platted area of a development, proposed easements shall be provided for the main(s) prior to receiving approval of the Engineering Plans.

Wastewater Design Flow Curve
1 - 750 Acres

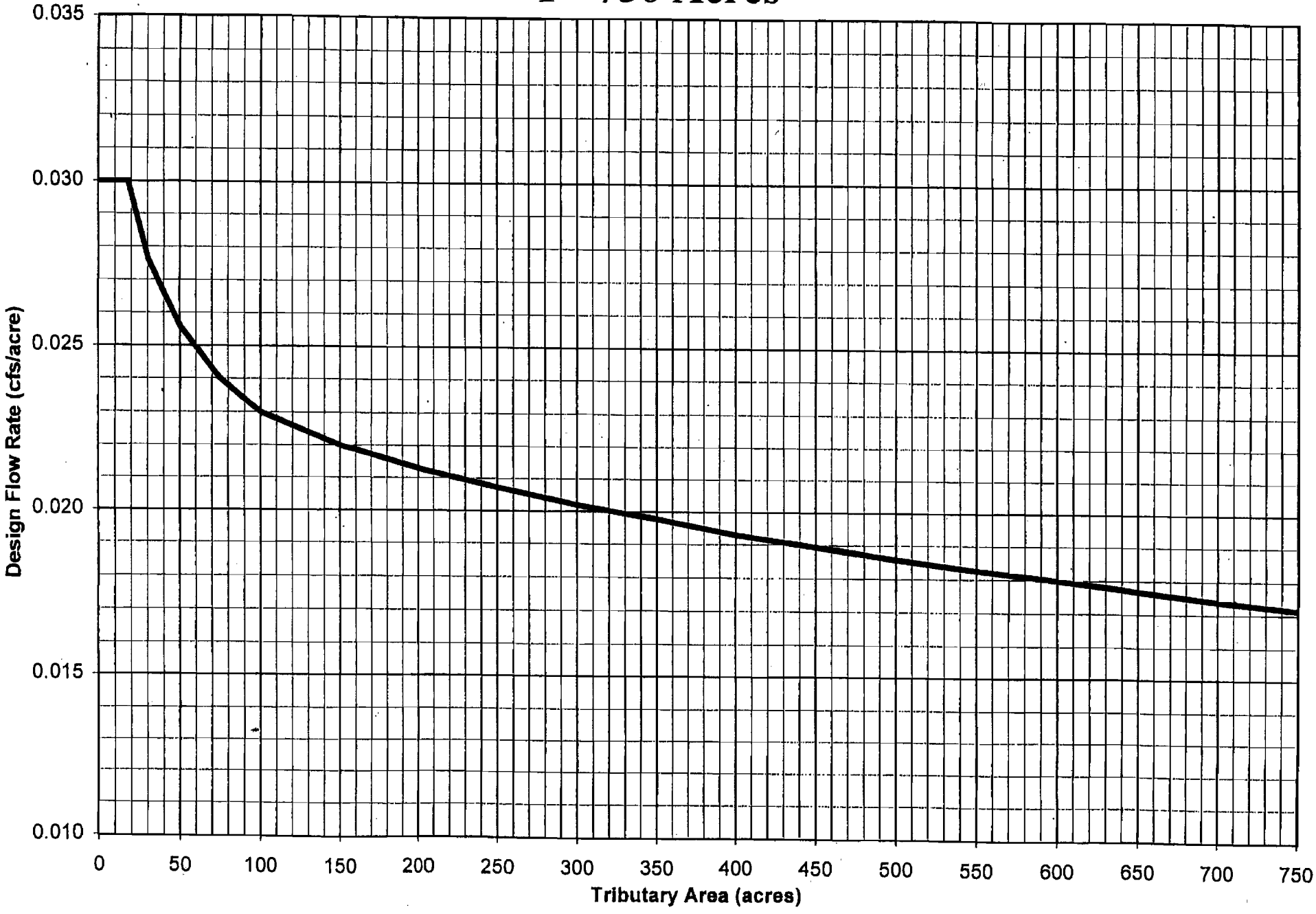

Lee's Summit, Missouri

Figure 6501-1 5/4/99

Wastewater Design Flow Curve
1 - 3000 Acres

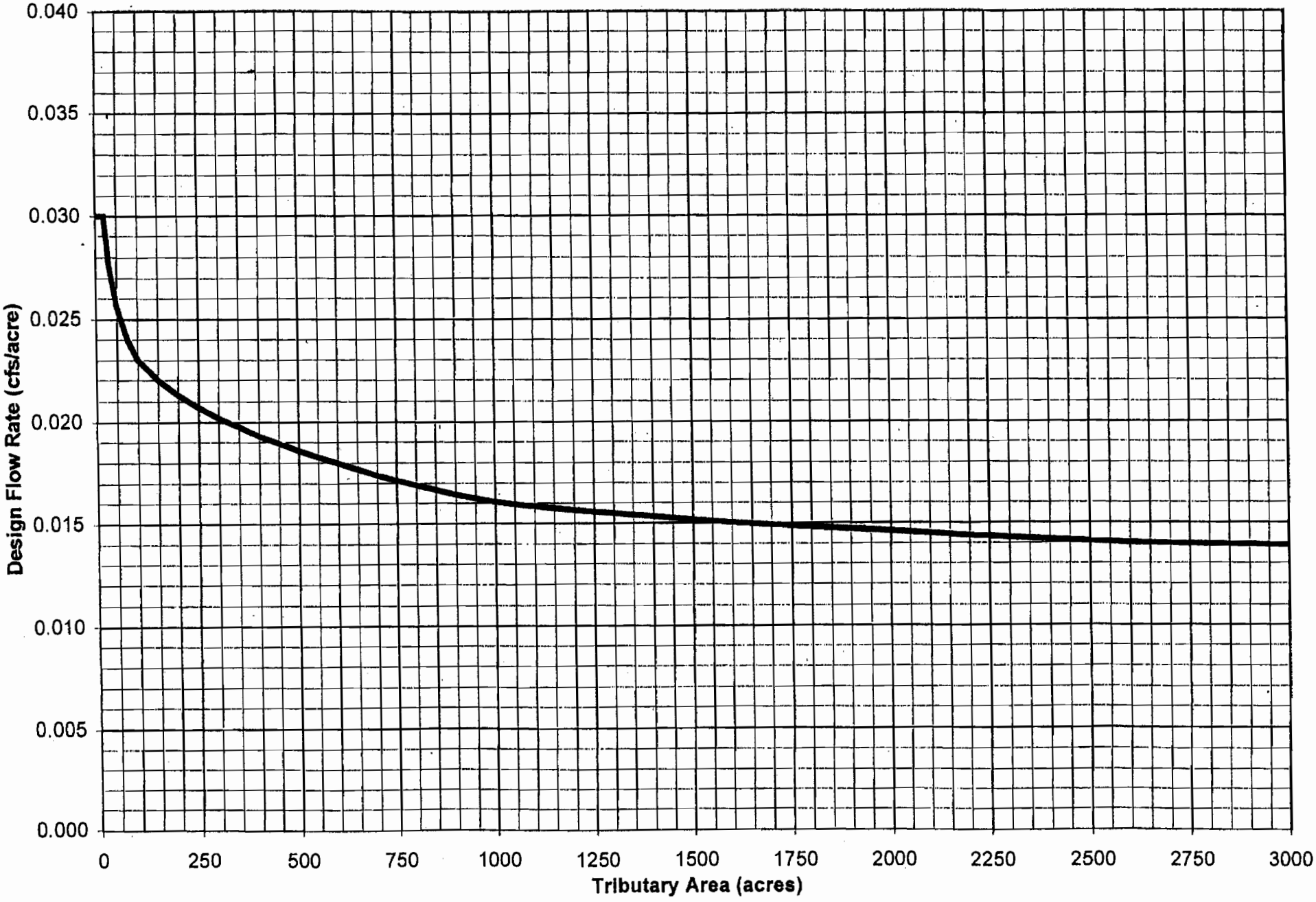

INFILTRATION / INFLOW
(Commercial Areas less than 100 acres)

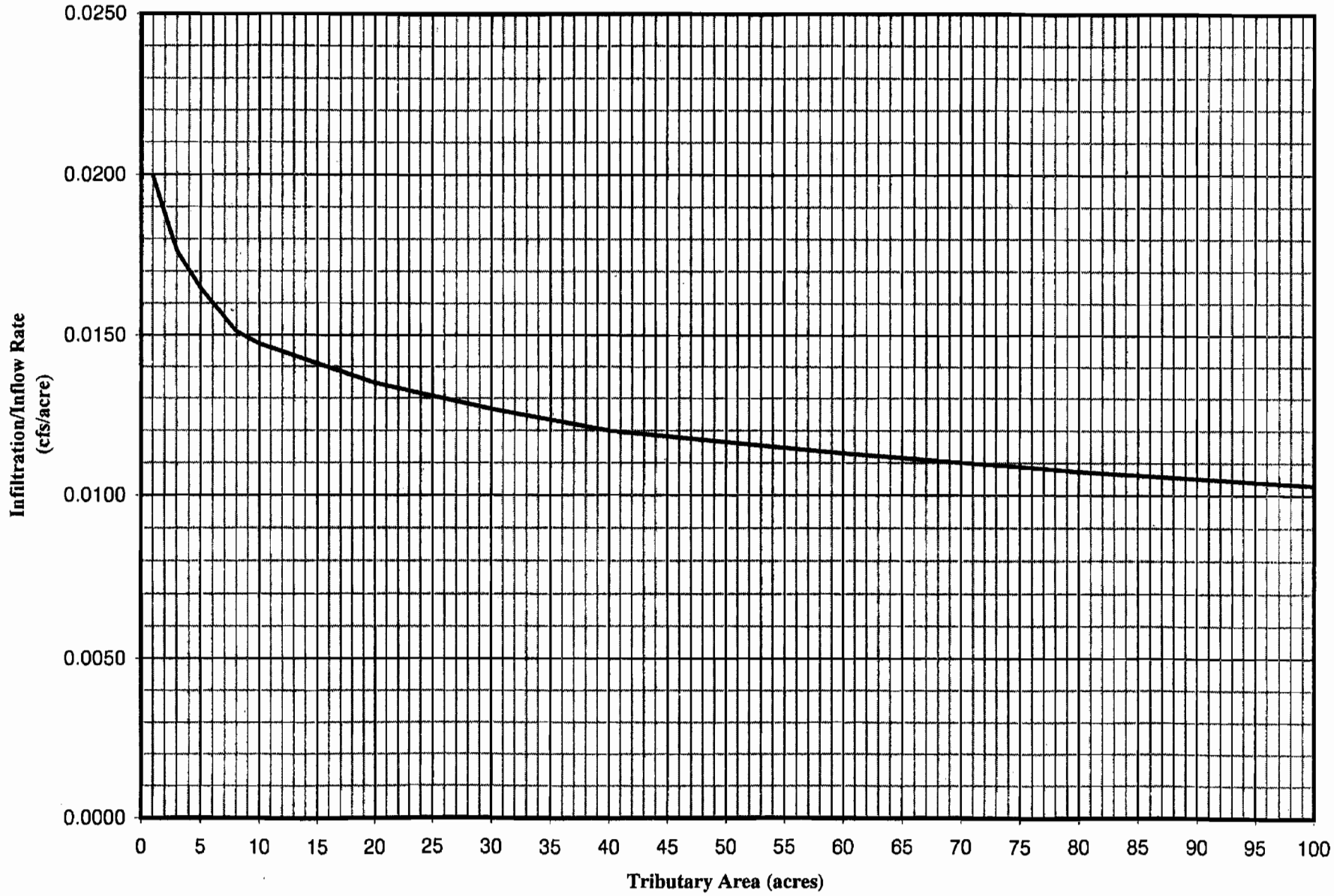

Note: The curve shown above does not include peak dry weather flow.
Peak dry weather flow must be added to obtain the PWWF.

Figure 6501-3

05/26/04

Table 6501-1. Equivalent Development Units

Source	EDU		Parameter
Institutional			
Hospital (not including ancillary services, i.e., cafeterias)	0.8	per	bed
Nursing Home	0.4	per	unit
Prison/Jail	0.4	per	inmate
Retirement Home	0.4	per	unit
Schools:			
Elementary	0.8	per	1000 ft^2
Middle and High	1.0	per	1000 ft^2
Commercial/Retail			
Office–General	0.3	per	1000 ft^2
Retail Stores	0.2	per	1000 ft^2
Warehouse (minimum 70% warehouse)	0.1	per	1000 ft^2
Shopping Centers and Stores	0.2	per	1000 ft^2
Restaurants:			
Drive-In	0.1	per	parking space
Fast Food (disposable patron wares)	1.6	per	1000 ft^2
Full Service	3.5	per	1000 ft^2
Animal Clinics	1.0	per	1000 ft^2
Auditoriums	0.6	per	1000 ft^2
Automobile Dealerships:			
Office Rate + Service Bays	office rate + 0.1 per service bay		
Automobile Service:			
Fast Service	0.5	per	service bay
Major Service	0.1	per	service bay
Bars and Cocktail Lounges	2.4	per	1000 ft^2
Banquet Rooms–food catered	0.5	per	1000 ft^2
Banquet Rooms–food prepared	1.1	per	1000 ft^2
Beauty Shop/Barber Shop	0.4	per	1000 ft^2
Body Shop	0.1	per	1000 ft^2
Bowling Alleys	0.4	per	lane
Car Wash:			
self-service	3.0	per	stall
automatic at service station	6.0	per	stall
tunnel, car pulled through	requires equipment specs, minimum 33		
Churches	0.5	per	1000 ft^2
Daycare/Nursery Schools	1.0	per	1000 ft^2
Dry Cleaners	0.3	per	1000 ft^2
Clubhouse (apartment)	1.0		
County Club			
private with golf course	3.0 + 2.2/1000 ft^2		
private without golf course	2.2	per	1000 ft^2
Exercise Area			
gym without showers	0.5	per	1000 ft^2
gym with showers	1.4	per	1000 ft^2
Fire Station	by water use		

Table 6501-1. Equivalent Development Units (continued)

Source	EDU		Parameter
Game Room/Arcade	0.8	per	1000 ft^2
Golf Course	3.0		
Greenhouse (area open to public)	0.2	per	1000 ft^2
Group Home	0.4	per	bed
Handball and Racquetball Courts	2.0	per	court
Hotel/Motel	0.3	per	room
Laundromat/Commercial Laundry	0.6/washer or 8.0/1000 ft^2		
Library (excluding book/file storage)	0.4	per	1000 ft^2
Locker Rooms	0.1	per	locker
Medical Offices/Outpatient Clinics	0.4	per	1000 ft^2
Meeting/Conference Rooms	0.6	per	1000 ft^2
Museum	0.4	per	1000 ft^2
Rifle/Handgun Ranges	0.2	per	lane
Roller Rink	1.2	per	1000 ft^2
Schools–Technical Vocational Institute, Junior College	0.9	per	1000 ft^2
Gas Station:			
with convenience center and without service bays	1.0 + 0.3/1000 ft^2		
without convenience center and without service bays	1.0		
Service Station:			
with 2 service bays	2.0		
with 2 service bays and car wash	8.0		
with 2 service bays and convenience center	2.0 + 0.3/1000 ft^2		
with 2 service bays, convenience center, and car wash	8.0 + 0.3/1000 ft^2		
Swimming Pools–public (private no charge)	1.1	per	1000 ft^2
Stadium/Arena	1.0/110 seats or 1.0/165 LF of bleachers		
Tanning Rooms/Centers	0.3	per	1000 ft^2
Tennis Courts–with shower facilities	2.0	per	court
Theater	1.2	per	1000 ft^2
Vacant Land	3.0	per	acre
Vehicle Garage	0.2	per	1000 ft^2
Yard Storage Buildings (excluding lumber storage)			
customer pick-up, no permanent employees	0.1	per	1000 ft^2
Industry	varies–industry specific		

Table 6501-2. Multi-Story Sources

Schools: Elementary Middle and High
Offices
Retail Stores
Warehouse
Shopping Centers and Stores
Restaurants: Fast Food Full Service
Animal Clinics
Bars and Cocktail Lounges
Banquet Rooms
Beauty Shop/Barber Shop
Churches
Daycare/Nursery Schools
County Clubs
Exercise Area/Gym
Fire Station
Game Room
Greenhouse (area open to public)
Library
Medical Offices/Clinics
Meeting/Conference Rooms
Museum
Schools–Technical Vocational Institute, Junior College
Tanning Rooms/Centers
Theaters
Vehicle Garage
Yard Storage Buildings