Minimum Design Standards For Missouri Non-community Public Water Systems

REVISED ~~AUGUST 9, 2013~~MARCH 20, 2014

Style Definition: TOC 1: Font: (Default) Times New Roman, 12 pt, Do not check spelling or grammar

DRAFT

This page intentionally left blank.

DRAFT

TABLE OF CONTENTS

TABLE OF CONTENTS 3
TABLES 13
DEFINITION OF TERMS i
GLOSSARY iii
PREAMBLE v
Chapter 1 - Submission of Engineering Reports, Plans, and Specifications 1
1.0. General. 1
1.0.1. Preparation and application submittal 1
1.0.2. Appeals 2
1.1. Engineering Report. ..... 3~~2~~
1.1.1. General information ..... 3~~2~~
1.1.2. Extent of the water system(s) ..... 3~~2~~
1.1.3. Soil, ground water conditions, and foundation problems ..... 4~~3~~
1.1.4. Flow requirements ..... 4~~3~~
1.1.5. Sources of water supply ..... 4~~3~~
1.1.5.1. Surface water sources ..... 4~~3~~
1.1.5.2. Ground water sources ..... 4~~3~~
1.1.6. Alternate plans ..... 5~~4~~
1.1.7. New technology and unproven processes ..... 5~~4~~
1.1.7.1. Evaluation ..... 5~~4~~
1.1.7.2. Engineering Report--Specific requirements for new technology ..... 6~~5~~
1.1.7.3. Specific requirements for financial certification ..... 7~~6~~
1.1.7.4. Specific requirements for performance contract ..... 7~~6~~
1.1.7.5. Performance period ..... 9~~8~~
1.1.7.6. Performance follow-up ..... 9~~8~~
1.1.8. Project Sites ..... 9~~8~~
1.2. Plans. ..... 10~~9~~
1.2.1. Plans shall include the following: ..... 10~~9~~
1.2.2. Detailed plans include: ..... 10~~9~~
1.3. Specifications. ..... 11~~10~~
1.4. Summary of Design Criteria. ..... 12~~11~~
1.5. Additional Information Required. ..... 12~~11~~
1.6. Revisions to Approved Plans. 12
1.7. Final Approval of Construction ..... 13~~12~~

DRAFT

Chapter 2 - General Design Considerations ..... 14~~13~~
2.0. General. ..... 14~~13~~
2.1. Design Basis. ..... 14~~13~~
2.2. Plant Layout. ..... 14~~13~~
2.3. Building Layout ..... 14~~13~~
2.4. Site Selection Requirements ..... 14~~13~~
2.5. Security and Safety Measures. ..... 15~~14~~
2.6. Electrical Controls. ..... 15~~14~~
2.7. Standby Power ..... 15~~14~~
2.8. Laboratory Equipment ..... 15~~14~~
2.8.1. Testing equipment ..... 16~~15~~
2.8.2. Physical facilities ..... 16~~15~~
2.9. Monitoring and Recording Equipment ..... 16~~15~~
2.10. Sample Taps. ..... 17~~16~~
2.11. Facility Water Supply. ..... 17~~16~~
2.12. Wall Castings ..... 17~~16~~
2.13. Meters. ..... 17~~16~~
2.14. Piping Color Code. ..... 17~~16~~
2.15. Disinfection. ..... 18~~17~~
2.16. Manuals and Parts List. ..... 18~~17~~
2.17. Other Considerations. ..... 19~~18~~
2.18. Automation. ..... 19~~18~~
Chapter 3 - Source Development ..... 22~~21~~
3.0. General. ..... 22~~21~~
3.1. Surface Water. ..... 22~~21~~
3.1.1. Quantity ..... 22~~21~~
3.1.2. Quality ..... 23~~22~~
3.1.3. Structures ..... 24~~23~~
3.1.3.1. Design of intake structures ..... 24~~23~~
3.1.3.2. Raw water pumping wells and transmission mains shall ..... 24~~23~~
3.1.3.3. Raw water storage reservoir ..... 25~~24~~
3.1.4. Lakes and reservoirs ..... 25~~24~~
3.1.4.1. Site preparation shall provide, where applicable: ..... 25~~24~~
3.1.4.2. Construction may require: ..... 25~~24~~
3.1.4.3. Construction shall require: ..... 26~~25~~

DRAFT

3.1.4.4. Water supply dams ..... 26~~25~~
3.1.4.5. Recreational uses of public water supply lakes ..... 26~~25~~
3.1.5. Zebra Mussel Control ..... 26~~25~~
3.2. Groundwater ..... 27~~26~~
3.2.1. Quantity ..... 27~~26~~
3.2.1.1. Minimum capacity ..... 27~~26~~
3.2.1.2. Number of sources ..... 27~~26~~
3.2.1.3. Auxiliary power ..... 27~~26~~
3.2.2. Quality ..... 28~~27~~
3.2.2.1. Water quality ..... 28~~27~~
3.2.2.2. Microbiological quality ..... 28~~27~~
3.2.2.3. Physical and, chemical characteristics ..... 29~~27~~
3.2.3. Location ..... 29~~28~~
3.2.3.1. Well location ..... 29~~28~~
3.2.3.2. Isolation standards ..... 29~~28~~
3.2.3.3. Other site location and security considerations ..... 31~~30~~
3.2.4. Testing and records ..... 31~~30~~
3.2.4.1. Yield and drawdown tests ..... 31~~30~~
3.2.4.2. Geological data ..... 35~~34~~
3.2.5. Well construction ..... 35~~34~~
3.2.5.1. Minimum protected depths ..... 35~~34~~
3.2.5.2. Drilling fluids and additives shall: ..... 35~~34~~
3.2.5.3. Surface or temporary casing ..... 35~~34~~
3.2.5.4. Permanent steel casing pipe shall: ..... 36~~35~~
3.2.5.5. Gravel pack material ..... 36~~35~~
3.2.5.6. Packers or liner hangers ..... 37~~36~~
3.2.5.7. Screens shall: ..... 37~~36~~
3.2.5.8. Plumbness and alignment requirements ..... 37~~36~~
3.2.5.9. Grouting requirements ..... 37~~36~~
3.2.5.10. Upper terminal well construction ..... 41~~39~~
3.2.5.11. Development ..... 41~~39~~
3.2.5.12. Capping requirements ..... 42~~40~~
3.2.5.13. Well plugging ..... 42~~40~~
3.2.5.14. Special conditions for wells drilled into consolidated formations ..... 42~~40~~

DRAFT

3.2.5.15. Special conditions for wells drilled into unconsolidated formations ..... 42~~40~~
3.2.5.16. Special conditions for radial wells ..... 43~~41~~
3.2.6. Well pumps, discharge piping and appurtenances ..... 44~~42~~
3.2.6.1. Line shaft pumps ..... 44~~42~~
3.2.6.2. Submersible pumps ..... 45~~43~~
3.2.6.3. Discharge piping ..... 45~~43~~
3.2.6.4. Pitless well units ..... 47~~45~~
3.2.6.5. Casing vent ..... 48~~46~~
3.2.6.6. Water level measurement ..... 48~~46~~
3.2.6.7. Permanent observation wells ..... 49~~47~~
3.2.7. Liners ..... 49~~47~~
3.2.7.1. General specifications and guidelines ..... 49~~47~~
3.2.7.2. Method of installation ..... 49~~47~~
3.3. Well Completion. ..... 50~~48~~
Chapter 4 - Treatment ..... 53~~51~~
4.0. General. ..... 53~~51~~
4.0.1. Chief operators ..... 53~~51~~
4.1. Specialized Treatment. ..... 53~~51~~
4.2. Disinfection. ..... 53~~51~~
4.2.1. Regulatory considerations ..... 53~~51~~
4.2.2. Use of disinfectants ..... 54~~52~~
4.2.3. Contact time and point of application ..... 54~~52~~
4.2.4. Residual disinfectant ..... 55~~53~~
4.2.5. Testing equipment ..... 56~~54~~
Chapter 5 - Chemical Application ..... 57~~55~~
5.0. General. ..... 57~~55~~
5.0.1. Plans and specifications ..... 57~~55~~
5.0.2. Chemical application ..... 57~~55~~
5.0.3. General equipment design ..... 58~~56~~
5.0.4. Chemical information ..... 58~~56~~
5.1. Facility Design. ..... 59~~57~~
5.1.1. Number of feeders ..... 59~~57~~
5.1.2. Control ..... 59~~57~~
5.1.3. Dry chemical feeders ..... 60~~58~~
5.1.4. Chemical solution metering pumps ..... 60~~58~~

DRAFT

5.1.5. Chemical solution metering pumps - Siphon control ..... 61~~59~~
5.1.6. Backflow prevention ..... 61~~59~~
5.1.7. Chemical feed equipment location ..... 61~~59~~
5.1.8. Service water supply ..... 62~~60~~
5.1.9. Storage of chemicals ..... 62~~60~~
5.1.10. Solution tanks ..... 63~~61~~
5.1.11. Day tanks ..... 65~~63~~
5.1.12. Chemical feed lines ..... 65~~63~~
5.1.13. Pumping of chemicals ..... 66~~64~~
5.1.14. Handling ..... 67~~65~~
5.2. Chemicals. ..... 67~~65~~
5.2.1. Shipping containers ..... 67~~65~~
5.2.2. Assay ..... 67~~65~~
5.2.3. Specifications ..... 67~~65~~
5.3. Operator Safety. ..... 67~~65~~
5.3.1. Ventilation ..... 67~~65~~
5.3.2. Respiratory protection equipment ..... 67~~65~~
5.3.3. Chemical protection and safety equipment ..... 68~~66~~
5.4. Specific Chemicals. ..... 68~~66~~
5.4.1. Chlorine gas ..... 68~~66~~
5.4.2. Sodium hypochlorite ..... 72~~70~~
5.4.3. Acids ..... 73~~71~~
5.4.4. Chlorine dioxide ..... 73~~71~~
5.4.5. Chloramines ..... 75~~73~~
5.4.6. Fluoridation ..... 77~~75~~
Chapter 6 - Minimum Design Standards for Pumping Facilities ..... 82~~76~~
6.0. General. ..... 82~~76~~
6.0.1. National Standards ..... 82~~76~~
6.0.2. Other general standards ..... 83~~77~~
6.1. Location and Protection. ..... 84~~78~~
6.2. Pumping Stations. ..... 84~~78~~
6.2.1. Finished and raw water pumping stations ..... 84~~78~~
6.2.2. Suction wells ..... 86~~80~~
6.2.3. Motor and pump installation and removal ..... 86~~80~~
6.2.4. Stairways and Ladders ..... 87~~81~~

DRAFT

6.2.5. Heating, Ventilation and Lighting ..... 87~~81~~
6.2.6. Dehumidification ..... 88~~81~~
6.2.7. Staffed pumping stations ..... 88~~82~~
6.3. Pumps. ..... 88~~82~~
6.3.1. Sizing ..... 88~~82~~
6.3.2. Single tower storage ..... 89~~82~~
6.3.3. Pumping unit design and construction ..... 89~~83~~
6.3.4. Suction Lift ..... 89~~83~~
6.4. Additional Requirements for Booster Pumps ..... 89~~83~~
6.4.1. Booster pumping station ..... 89~~83~~
6.4.2. Booster pumps drawing from storage tanks ..... 90~~84~~
6.4.3. Inline booster pumps ..... 90~~84~~
6.4.4. Individual home booster pumps ..... 90~~84~~
6.4.5. Automatic stations ..... 91~~84~~
6.5. Appurtenances. ..... 91~~85~~
6.5.1. Valves ..... 91~~85~~
6.5.2. Piping ..... 91~~85~~
6.5.3. Gages and meters ..... 91~~85~~
6.5.4. Water seals ..... 91~~85~~
6.5.5. Controls ..... 92~~85~~
6.5.6. Power ..... 92~~86~~
6.5.7. Water pre-lubrication ..... 92~~86~~
6.5.8. Oil or grease lubrication ..... 92~~86~~
6.6. Well Houses. ..... 92~~86~~
Chapter 7 - Minimum Design Standards for Finished Water Storage Tanks and Reservoirs .. 94~~88~~
7.0. General Design and Construction Standards ..... 94~~88~~
7.0.1. AWWA Standards for unpressurized tanks and reservoirs ..... 94~~88~~
7.0.2. Parameters for unpressurized tanks and reservoirs for finished water storage ... 94~~88~~
7.0.2.1. Tank design ..... 94~~88~~
7.0.2.2. Storage water quality ..... 94~~88~~
7.0.2.3. Provisions for sampling ..... 95~~89~~
7.0.3. Location ..... 95~~89~~
7.0.4. Protection of finished water storage structures ..... 96~~90~~
7.0.5. Vents on unpressurized finished water storage structures ..... 97~~91~~
7.0.6. Overflows on unpressurized finished water storage structures ..... 97~~91~~

DRAFT

7.0.7. Freeze protection for unpressurized finished water storage structures ..... 98~~92~~
7.0.8. Catwalks ..... 98~~92~~
7.0.9. Corrosion protection ..... 98~~92~~
7.0.10. Drains on unpressurized tanks and reservoirs ..... 99~~93~~
7.0.11. Roofs and sidewalls on unpressurized tanks and reservoirs ..... 99~~93~~
7.0.12. Storage tank access ..... 100~~94~~
7.0.13. Discharge pipes ..... 101~~95~~
7.0.14. Safety devices at unpressurized finished water storage structures ..... 101~~95~~
7.0.15. Disinfection of unpressurized finished water storage structures ..... 101~~95~~
7.0.16. Antenna, wires, lighting and cables ..... 101~~95~~
7.0.17. Vaults associated with finished water storage ..... 103~~97~~
7.1. Tanks and Reservoirs for Finished Water Storage. ..... 104~~98~~
7.1.1. Fire protection ..... 104~~98~~
7.1.2. No fire protection ..... 105~~99~~
7.1.3. Storage capacity for unpressurized storage facilities ..... 106~~100~~
7.1.3.1. Elevations ..... 106~~100~~
7.1.3.2. Volumes ..... 107~~101~~
7.1.4. Costs ..... 108~~102~~
7.2. Plant Storage. ..... 108~~102~~
7.2.1. Filter backwash ..... 108~~102~~
7.2.2. Clearwells ..... 108~~102~~
7.2.3. Receiving basins and pump wet wells ..... 109~~103~~
7.2.4. Finished water adjacent to unsafe water ..... 109~~103~~
7.3. Distribution Storage ..... 110~~104~~
7.3.1. Minimum PSIG at normal ground elevation ..... 110~~104~~
7.3.2. Working pressure PSIG at normal ground elevation ..... 110~~104~~
7.3.3. Distribution Storage Controls ..... 110~~104~~
7.4. Hydropneumatic Storage ..... 111~~105~~
7.4.1. Hydropneumatic tank design and installation ..... 111~~105~~
7.4.2. Sizing hydropneumatic tanks ..... 112~~106~~
7.4.3. Usable Volume ..... 112~~106~~
7.4.4. Conventional pressure tanks ..... 113~~107~~
Chapter 8 - Distribution Systems ..... 115~~109~~
8.0. Materials. ..... 115~~109~~
8.0.1. Standards and materials selection ..... 115~~109~~

DRAFT

8.0.2. High Density Polyethylene (HDPE) Pipe ..... 115~~109~~
8.0.3. Permeation of pipe walls ..... 116~~110~~
8.0.4. Used materials ..... 116~~110~~
8.0.5. Joints ..... 117~~111~~
8.0.6. Tracer wire or tape ..... 117~~111~~
8.1. Water Main Design. ..... 117~~111~~
8.1.1. Pressure ..... 117~~111~~
8.1.2. Diameter ..... 118~~112~~
8.1.3. Fire protection ..... 118~~112~~
8.1.4. Flushing ..... 118~~112~~
8.2. Isolation Valves. ..... 119~~113~~
8.3. Fire Hydrants. ..... 119~~113~~
8.3.1. Location and spacing ..... 119~~113~~
8.3.2. Valves and nozzles ..... 119~~113~~
8.3.3. Hydrant leads ..... 120~~114~~
8.3.4. Drainage ..... 120~~114~~
8.3.5. Color Coding ..... 120~~114~~
8.3.6. Installation ..... 120~~114~~
8.4. Air Relief Valves; Valve, Meter and Blow Off Chambers. ..... 121~~115~~
8.4.1. Location ..... 121~~115~~
8.4.2. Piping ..... 121~~115~~
8.4.3. Chamber drainage ..... 121~~115~~
8.4.4. Vaults ..... 121~~115~~
8.5. Installation of Mains ..... 122~~116~~
8.5.1. Standards ..... 122~~116~~
8.5.2. Bedding, embedment, and backfill ..... 122~~116~~
8.5.3. Cover ..... 123~~117~~
8.5.4. Thrust restraint ..... 123~~117~~
8.5.5. Pressure and leakage testing ..... 123~~117~~
8.5.6. Disinfection ..... 123~~117~~
8.6. Separation of Water Mains, Sanitary Sewers and Combined Sewers. ..... 123~~117~~
8.6.1. General ..... 124~~118~~
8.6.2. Parallel installation ..... 124~~118~~
8.6.3. Crossings ..... 124~~118~~

DRAFT

8.6.4. Exception ..... 125~~119~~
8.6.5. Force mains ..... 125~~119~~
8.6.6. Sewer manholes ..... 125~~119~~
8.6.7. Disposal facilities ..... 125~~119~~
8.7. Surface Water Crossings. ..... 126~~120~~
8.7.1. Above water crossings ..... 126~~120~~
8.7.2. Underwater crossings ..... 126~~120~~
8.8. Backflow Prevention. ..... 127~~121~~
8.9. Water Services and Plumbing. ..... 127~~121~~
8.9.1. Plumbing ..... 127~~121~~
8.9.2. Booster pumps ..... 127~~121~~
8.11. Water Loading Stations. ..... 127~~121~~
8.11.1. Backflow ..... 128~~122~~
8.11.2. Filling device ..... 128~~122~~
8.11.3. Hose length ..... 128~~122~~
Chapter 9 – Exceptions and Appeals ..... 129~~123~~
9.1. General. ..... 129~~123~~
9.2. Procedures. ..... 129~~123~~
9.4. Appeals. ..... 131~~124~~
Appendices I
Appendix A: Construction Planning and Procedures III
A.1. Typical procedures for proposed new public water supply system III
Appendix B: Department Offices as of Date of Publication V
Appendix C: Typical Procedures for Obtaining a Permit to Dispense Water to the Public VII
Appendix D: Well Drillers Example Forms and Information VIII
D-1 Survey of pressure grout sealing of well casing ..... IX~~VIII~~
D-2 Important points to consider when conducting a pumping test ..... X~~IX~~
D.3. Well Labeling Diagram ..... XI~~X~~
Appendix E: Diagrams – Typical Disinfection layout for Non Community Systems ..... XII~~XI~~
Appendix F: Water Use Calculations and Acceptable Tables for Transient Non-community Water Systems ..... XV~~XII~~
F.1. Peak Flow and example ..... XV~~XII~~

DRAFT

TABLES

Table 1 – Piping Color Code 18
Table 2 – New Well Isolation Radii 30
Table 3 – Steel Pipe ..... 51~~50~~
Table 4 – Acceptance or Drawdown Factors ..... 113~~109~~
Table F.1. Water Supply Fixture Units for Public Use Fixtures ..... XVI~~XIV~~
Table F.2. Commercial Laundry Capacity Table ..... XVII~~XV~~
Table F.3. Conversion of Water Supply Fixture Units to Gallons Per Minute (GPM) ..... XVII~~XV~~

DRAFT

DEFINITION OF TERMS

The following is a list of terms used throughout this document and the definition of each.

7-day Q10 flow rate: The lowest average flow that occurs for seven (7) consecutive days once every ten (10) years.

Alteration: Any change, removal or addition to an existing waterworks system, portion of the system, treatment process, and chemicals and that affects any of the following:

1. Flow
2. Capacity
3. System service area
4. Source
5. Treatment
6. Reliability

This includes changes to location, materials, size, or function that differs from the original approved design and/or construction.

Community Water System: A public water system which serves at least fifteen (15) service connections and is operated on a year-round basis or regularly serves at least twenty-five (25) residents on a year-round basis.

Comprehensive Performance Evaluation (CPE): A systematic review and analysis of a water treatment plant's performance without major capital improvements. It is the first part of a composite correction program.

Continuing Operating Authority: The permanent organization, entity or person identified on the ~~p~~Permit to ~~dispense water~~Dispense Water that is responsible for the management, operation, replacement, maintenance and modernization of the public water system in compliance with the Missouri Safe Drinking Water Law and Regulations (see 10 CSR 60-3.020).

Design Instantaneous Peak Flow: The flow rate measured at the instant the maximum demand is occurring in a water system. It is calculated by multiplying the cross-sectional area of the water pipe by the velocity of the water at any one instant.

Design Average Day Demand: The anticipated amount of water used in an average day. This is calculated by dividing the anticipated total annual water production by the number of days in the year.

Design Maximum Day's Demand: The anticipated amount of water needed to satisfy the day of highest water usage. Typically, this is 150% of the Average Day Demand.

Design Period: The span of time any proposed water system or water system component will be utilized.

Diurnal Flow Pattern: This is a plot of water demand versus time for a 24-hour period. The curve depicts a typical period of time and is used to simulate the daily operation of the network, especially the cycling of system storage.

Fire Protection: This is defined as the ability to provide water through a distribution system for fighting fires in addition to meeting the normal demands for water usage.

DRAFT

Historical Data: Actual records of past water production, consumption and other operational information.

Maximum Day Demand: The amount of water needed to satisfy the day of highest water usage. Typically, this is 150% of the Average Day Demand.

Maximum Flow: The greatest amount of water demanded within a specified time period.

Maximum Hour Demand: The amount of water needed to satisfy the highest flow rate in a water system occurring for one-hour duration.

Non-transient ~~N~~non-community water system: A public water system that is not a community water system and that regularly serves at least twenty-five (25) of the same persons over six (6) months per year.

Normal Working Pressure: Design pressures that include all conditions of design flows excluding fire flow.

Peak Demand: The maximum momentary load, expressed as a rate, placed on a water treatment plant, distribution system, or pumping station. It is usually the maximum average load in one hour or less, but may be specified as instantaneous or for some other short time period.

Peak Flow: See: Maximum ~~f~~Flow.

Period of Record: This is the time span covered by a particular set of data.

Permeate: As related to membrane filtration: the filtrate or the water filtered by the membrane filter that is to be consumed

Public Water System: A system for the provision to the public water for human consumption through pipes or other constructed conveyances, if the system has at least fifteen (15) service connections or regularly serves an average of at least twenty-five (25) individuals daily at least sixty (60) days out of the year. The system includes any collection, treatment, storage, or distribution facilities used in connection with the system. A public water system is either a community water system or non-community water system.

Retentate: The filter residue: the water, chemicals and other elements withheld and not passed through by membrane filtration. Also known as reject water.

Secondary public water system: A public water system which obtains all of its water from an approved public water system(s), consists of a water distribution system, and resells the water or is a carrier which conveys passengers in interstate commerce. Parts of a primary public water system may be classified as being a secondary public water system if they meet this definition and are physically separated from those parts served by the source for the primary public water system.

Sorption: the taking in or holding of something, either by absorption or adsorption.

Transient non-community water system: A public water system that is not a community water system, which has at least fifteen (15) service connections or regularly serves an average of at least twenty-five (25) individuals daily at least sixty (60) days out of the year.

DRAFT

GLOSSARY

ANSI	American National Standards Institute
API	American Petroleum Institute
ASTM	American Society for Testing and Materials
AWWA	American Water Works Association
CFR	Code of Federal Regulations
COA	Continuing Operating Authority
CPE	Comprehensive Performance Evaluation
CSR	Code of State Regulations
FAA	Federal Aviation Administration
GAC	Granular Activated Carbon
HDPE	High Density Polyethylene
ISO	Insurance Services Office
NFPA	National Fire Protection Association
NIOSH	National Institute of Occupational Safety and Health
NPDES	National Pollutants Discharge Elimination System
NSF	National Sanitation Foundation
NSF	National Science Foundation
OSHA	Occupational Safety and Health Administration
PAC	Powdered Activated Carbon
PDWB	Public Drinking Water Branch
PPE	Personal Protective Equipment
PPI	Plastic Pipe Institute
PTA	Packed Tower Aeration
PVC	Polyvinylchloride
RSMo	Revised Statutes of Missouri
SCADA	Supervisory Control and Data Acquisition
SDR	Size Dimension Ratio
TOC	Total Organic Carbon
UL	Underwriters Laboratory
USC	United States Code
USDA	United States Department of Agriculture
USGS	United States Geological Survey
UV	Ultraviolet Light

DRAFT

This page intentionally left blank

DRAFT

PREAMBLE

What is the Purpose of This Document?

This publication reflects the minimum standards and guidelines of the Missouri Department of Natural Resources (the Department) in regard to the preparation, submission, review, and approval of engineering reports, plans, and facilities for the construction or alteration of non-community public water systems. These standards are necessary for facilities to comply with the Missouri safe drinking water statutes and regulations.

These standards, consisting of proven technology, engineering principles, and sound water works practices, are intended to accomplish the following objectives: to serve as a reference for professional engineers in the design and preparation of engineering reports, plans, and specifications for public water systems; to suggest limiting values for items upon which evaluation of such engineering reports, plans, and specifications are evaluated by the Department; and to ensure that a new or altered public water system facility will be capable of supplying adequate water in compliance with applicable regulations.

These standards draw heavily on the Recommended Standards for Water Works, commonly known as the "Ten State Standards." The Great Lakes-Upper Mississippi Board of Public Health and Environmental Managers created a Water Supply Committee in 1950 consisting of one associate from each state represented on the Board (Illinois, Indiana, Iowa, Michigan, Minnesota, Missouri, New York, Ohio, Pennsylvania, and Wisconsin). In 1978, a representative of the Canadian province of Ontario was added. This committee was assigned the responsibility for reviewing existing water works practices, policies, and procedures, and reporting its findings to the Board. The report of the Water Supply Committee was first published in 1953, and has been updated and revised several times since then. The "Ten State Standards" are widely accepted throughout the water works industry as minimum standards for construction of safe water supplies.

On What Authority Is This Document Based ~~On~~?

The primary authority for oversight of public water system design and construction is subsection 640.115(2) of the Missouri ~~Safe Drinking Water Law 640.115(2)~~statutes, which states "Construction, extension or alteration of a public water system shall be in accordance with the rules and regulations of the safe drinking water commission~~". The~~." Missouri ~~Safe Drinking Water Regulation~~safe drinking water regulation 10 CSR 60-3.010(1) & (2) establishes the procedures for obtaining construction authorization, final construction approval and approval of a supervised construction program. ~~The Missouri Safe Drinking Water Regulation~~ 10 CSR 60-10.010 sets the requirements for submission, review and approval of engineering reports, plans and specifications for public water supply planning and construction. ~~The Missouri Safe Drinking Water Regulation~~ 10 CSR 60-10.020 establishes requirements for site approval of new or expanded water systems.

DRAFT

To Whom Do These Standards Apply?

These standards apply to new non-community public water systems designed during the effective dates of this document. These standards also apply to alterations made at existing non-community public water systems. Only the portion of the existing water system that is altered is subject to these standards. These standards are not an inspection tool to require facilities constructed with approvals issued under previous design standards to upgrade to newer standards. However, where deterioration of water quality, sanitation, safety, or performance requires corrective action, the alterations must meet or exceed minimum design standards.

What Does This Document Require?

Where the terms "shall" and "must" are used, mandatory requirements are indicated. These terms are used where practice is sufficiently standardized to permit specific delineation of requirements or where safeguarding public health justifies such definite action. Other terms, such as "should," "recommended," and "preferred," indicate desirable procedures or methods, and deviations are subject to individual consideration, but these terms in no way indicate a requirement.

Will Exceptions Be Considered?

Deviation from the mandatory "shall" or "must" requirements will be considered by the Department on a case-by-case basis, based on the primary purpose of the proposed water works, the local conditions governing their functions, and operation.

In many instances in this document, exceptions are built-in. For example, general language is used where practical to account for a wide range of options (~~i.~~e.g., section 5.1.4.a. "positive displacement pumps"), or design alternatives are presented (~~i.~~e.g., section 1.1.2.) for meeting a requirement.

Specific exceptions can be considered upon request ~~by~~to the Department by submitting the appropriate form referenced in Chapter 9 of this document. In no case shall an exception be approved if granting such poses a proven public health risk. Reasons for a request for exception may include, but are not limited to, the following:

1. The proposal provides equivalent or superior proven performance
2. New technology is available (See section 1.1.7.)
3. Excessive cost of construction relating to the necessity for upgrading existing infrastructure that is within its design life.

An exception will be approved or denied based on the justification provided along with supporting documentation. Decisions may be subject to past experience, risk based analysis and prior history of compliance of the applicant.

This approach provides flexibility in meeting basic requirements that ensure the proposed new or modified water system provides safe quality and adequate quantities of drinking water.

DRAFT

Approval of the use of "other criteria," where that option is offered, must, of necessity, be somewhat subjective and situation-specific. However, the Department feels it is important to allow this extra degree of flexibility to the water system and its engineers.

Does This Document Guarantee Performance?

It is not possible for a publication of this type to address every situation that may be encountered. Future data, changes in water quality, and/or changing regulatory environment may also necessitate more thorough design and review than the standards covered by this document. In addition, the design standards contained within this document represent minimum acceptable standards for design and construction of public water systems in Missouri. Simply meeting minimum design standards does not guarantee acceptable performance, nor does it eliminate risk during the design life of a project. We highly recommend that design and construction account for unique situations and exceed minimum standards. We also highly recommend that managers and operators of drinking water facilities take a proactive approach to maintaining and operating facilities to maximize the effectiveness and life of your investment.

What Process Will the Department Use to Evaluate and Accept Alternative Designs?

See section 1.1.7

What Process is Available for Appealing the Department's Decision to Reject an Alternative Design?

See section 1.1.7

DRAFT

This page intentionally left blank

DRAFT

Chapter 1 - Submission of Engineering Reports, Plans, and Specifications

1.0. General.

For new systems, connection to an existing approved water supply system shall be given primary consideration. A ground water system may be developed if connection to an existing system is impractical. A system using hauled water from a public water system may be considered only if a supply from an existing system or a ground water system cannot be developed.

Missouri Safe Drinking Water Regulation 10 CSR 60-14 requires operation of certain public water systems to be under the direct supervision of a certified operator holding a valid certificate equal to or greater than the classification of the water system. 10 CSR 60-14 also provides detailed information on applicability, system classification, and requirements for written Contract Operator Agreements. Additional information is available on the Department's website or by contacting the Public Drinking Water Branch's Operator Certification Section.

Appendix A provides typical step-by-step procedures for obtaining construction authorization. Some steps may be required. Contact information is available in Appendix B, and typical procedures for obtaining a permit to dispense water to the public is available in Appendix C.

1.0.1. Preparation and application submittal

For non-transient non-community water systems, and transient non-community water systems using surface water or ground water under the direct influence of surface water, a minimum of one hard copy and one electronic copy of all engineering reports, final plans, and specifications shall be submitted along with a completed and signed Department ~~f~~Form MO 780-0701 "Application for a Construction Permit" to the Public Drinking Water Branch at the following address:

Missouri Department of Natural Resources
Public Drinking Water Branch
1101 Riverside Drive
P.O. Box 176
Jefferson City, Missouri 65102-0176
Attn: Permits and Engineering

Transient non-communities using only groundwater not under the direct influence of surface water may, on a case by case basis, be allowed to construct without submitting engineering plans and specifications at the discretion of the Department. A proposed transient non-community water system must contact the Public Drinking Water Branch and obtain permission to construct prior to the start of any construction.

Documents submitted for formal approval shall include but may not be limited to the following:

a. A summary of the basis of design, including hydraulic calculations sufficient to demonstrate the system will operate satisfactorily;

DRAFT

b. Identification of responsible party doing construction inspections along with their qualifications;
c. Applications for a construction permit;
d. Readily available cost estimates;
e. Specifications;
f. Detailed plans; and
g. General layout.

1.0.2. Appeals

Please refer to Chapter 9 for information on appealing decisions.

DRAFT

1.1. Engineering Report.

An engineering report is required for the development of a new water supply system, new water sources, and expansions or alterations to existing water systems that will result in changes to the treatment process, overall production or storage capacity, or any distribution changes that may significantly impact system hydraulics. The engineering report shall, where pertinent, present the information listed in this chapter.

1.1.1. General information

General information shall include:

a. The name and mailing address of the water system's Continuing Operating Authority as defined in 10 CSR 60-3.020;
b. A description of the existing and proposed water system(s);
c. A description of the existing and proposed sewerage system and sewage treatment works as it affects the existing or proposed water system;
d. An identification of the water system, or area served with sufficient legible mapping so that the geographical area under concern is clearly understood and locatable; and
e. An imprint of professional engineer's seal or conformance with State of Missouri's engineering registration requirements.

1.1.2. Extent of the water system(s)

Engineering reports and design considerations shall include the following information when determining usage:

a. A description of the nature and extent of the area being served, including layout maps or drawings showing the legal boundaries of the water system(s);
b. Provisions for extending the water system to include additional areas;
c. Appraisal of future requirements for service including water supply needs;
d. Historical water use data or data from a comparable water system;
e. If historical data or data from a comparable system is not available, design shall use the modified fixture value method found in AWWA Manual for Sizing Water Service Lines and Meters by counting each fixture in the system. More information is available in Appendix F.
    1. When designing recreational vehicle parks or campgrounds, each recreational vehicle connection or campsite is considered as a hose connection.
    2. Recreational vehicle parks or campgrounds may design for 25-gallon/day per camp site for sites without individual water connections in addition to special use fixtures. Otherwise, a minimum design usage of 50 gallons/day per camp site in addition to special use fixtures shall be used.
    3. The value given to special use fixtures such as swimming pool refill lines, soda fountains, irrigation facilities, commercial dishwashers, etc. shall be stated.
f. Other usage determination methods will be considered upon justification.

DRAFT

1.1.3. Soil, ground water conditions, and foundation problems

The engineering report shall specifically address whether the native soils are suitable for main bedding and backfill and note the extent that crushed stone, gravel or other purchased bedding/backfill will be needed, along with estimated costs. The report shall also address the potential for rock excavation in the various soils encountered, along with estimated costs.

1.1.4. Flow requirements

Flow requirements, including:

a. Hydraulic analyses based on flow demands and pressure requirements (see Chapter 8 of this document); and
b. Refer to Chapter 7.1.1 for additional requirements when fire protection is provided.

1.1.5. Sources of water supply

Describe the proposed source or sources of water supply to be developed, the reasons for their selection, and provide information as follows:

1.1.5.1. Surface water sources

Including where pertinent:

a. Hydrological data, stream flow, and weather records;
b. Safe yield design as described in section 3.1. of this document;
c. The maximum flood flow and the safety features of the spillway and dam, shall be based on the design criteria of the Missouri Dam and Reservoir Safety Council, regardless of the height of the dam;
d. A description of the watershed, noting any existing or potential sources of contamination (such as highways, railroads, chemical facilities, farming operations, etc.) which may affect water quality, a discussion of land use practices, and provisions for erosion and siltation control structures;
e. Summarized quality of the raw water, with special reference to fluctuations in quality, changing meteorological conditions, etc.; and
f. Source water protection issues or measures that need to be considered or implemented. (See 3.1.2)

1.1.5.2. Ground water sources

The Department shall be consulted prior to design and construction regarding a proposed well location as it relates to required separation between existing and potential sources of contamination and groundwater development. The engineering report shall include:

a. A legal description of sites under consideration;
b. Advantages of the selected site;
c. Elevations with respect to surroundings;
d. Probable character of formations through which the source is to be developed;

DRAFT

e. Geologic conditions affecting the site; for example, any existing sinkholes, caves, test holes, abandoned wells, or anticipated interference between proposed and existing wells;
f. A summary of source exploration, test well depth, and method of construction, placement of liners or screen, test pumping rates and their duration, location, sieve analysis, water levels and specific yield, and water quality;
g. Existing wells within 300 feet radius of the proposed well site, giving their depths, protective casing depths, capacities, and location;
h. Sources of possible contamination within not less than 300 foot radius; such as sewers and sewerage facilities, highways, railroads, landfills, outcroppings of consolidated water bearing formations, chemical facilities, waste disposal wells, etc.; and
i. Wellhead protection measures being considered.

1.1.6. Alternate plans

Where two or more solutions exist for providing public water supply facilities, each of which is feasible and practicable, discuss the alternate plans. Give reasons for selecting the solution recommended, including financial considerations, and a comparison of the certification level of water system operator required.

1.1.7. New technology and unproven processes

The technologies provided in these design standards are generally based on standards of the American Water Works Association, Recommended Standards for Water Works (commonly called "Ten States Standards"), and other nationally recognized standards. These technologies have a long history of use and can be reasonably expected to perform satisfactorily. However, it is the policy of the Department to encourage new technologies for the production, treatment, and distribution of drinking water while continuing to protect the public health. Any public water system proposing a new technology that is not addressed in these design standards shall provide and meet additional requirements outlined in this section.

1.1.7.1. Evaluation

a. It is not possible to cover recently developed processes and equipment in a publication of this type. However, it is the policy of the Department to encourage rather than obstruct the development of new processes and equipment. Recent developments may be acceptable if they meet at least one of the following conditions:
    1. They have been thoroughly tested in full scale comparable installations under competent supervision;
    2. They have been thoroughly tested as a pilot plant operated for a sufficient time to indicate satisfactory performance; or
    3. A performance bond or other acceptable arrangements have been made so the owners or official custodians are adequately protected financially or in case of failure of the process or equipment.

DRAFT

b. General criteria for evaluating the merits of studies and pilot programs are as follows:
   1. Sufficient data to indicate comparable or superior performance under extreme operating conditions to existing proven technologies;
   2. Sufficient data to indicate comparable or superior reliability of service consistent with the operation and maintenance capabilities of the system for which the design is proposed; and
   3. Sufficient data to indicate comparable or superior costs of operation and maintenance to existing proven technologies.

1.1.7.2. Engineering Report– - Specific requirements for new technology

a. Complete description of the new technology including the scientific principles upon which the technology is based;
b. A statement indicating if the technology is currently protected by U.S. patents or is otherwise proprietary;
c. Results of full scale operations at other public water systems, with water similar to that of the public water system proposing the installation or pilot studies;
d. Pilot studies shall:
   1. Have protocols including proposed testing parameters approved by the Department prior to initiating the pilot study;
   2. Be done in a manner that will assure an acceptable quality of finished water will be produced through all seasonal water quality variations of the source water;
   3. Include a research of historic data to determine the extremes of water quality that may be encountered and the research results submitted in the results of the pilot study submitted with the engineering report;
   4. Be conducted under the same operating parameters as the proposed full scale system;
   5. Include an assessment of the costs of operation, replacement, and maintenance to be included in the results of the pilot study submitted with the engineering report; and
   6. Be done in a manner to show repeatability of performance under the same operating conditions and the effects of long term operation.

e. The expected design life of each equipment component used in the new technology and the present day replacement cost of each component including both material cost and labor cost;
f. A complete description of the training needed for public water system personnel to operate and maintain the new technology including the number of days of training and the cost of training. If initial training is provided with the purchase price, the cost of training additional operators or maintenance personnel must be identified to cover personnel turnover;
g. The estimated number of minutes or hours needed per day, week, month, quarter, or year (as appropriate) including any down time expected to operate and maintain the components of the new technology. Any expected

DRAFT

maintenance or repairs that must be done by vendor or factory personnel must also be identified along with costs, frequency, and down time;

h. The estimated costs of operating and maintaining the new technology;
i. A complete description of standard technology including detailed cost estimates of material, labor, engineering, and contingency that would be needed to replace the new technology in the event the new technology is found to be ineffective; and
j. A complete list of operating records, maintenance records, cost records, and testing protocol needed to evaluate the performance of the new technology.

1.1.7.3. Specific requirements for financial certification

The public water system chief financial officer (or equivalent official if appropriate) shall provide written certification to the Department that the system has financial resources that are adequate to operate and maintain the new technology and to replace the new technology with standard technology should the new technology be found to be ineffective. This certification shall include the nature of the financial resources, which may include but ~~is~~may not be limited to:

a. Cash reserves in bank accounts;
b. U.S. Government securities;
c. Other investments (stocks, bonds, mutual funds, precious metals, etc.);
d. Local bonds passed for this project but left in reserve to cover this contingency;
e. Binding agreement with a government funding agency to provide the funding needed to replace the new technology if it proves ineffective;
f. A performance bond meeting the conditions noted in the Performance Contract; and
g. Projected annual operating fund surpluses.

1.1.7.4. Specific requirements for performance contract

The public water system shall enter into a contract with the Department that includes the following elements: (A less stringent method would be a written certification instead of a contract)

a. The new technology shall be deemed ineffective if use of the technology results in a maximum contaminant level violation, action level violation, or treatment technique violation listed in 10 CSR 60 during any three months during a running 12-month period over the life of the performance period;
b. The new technology shall be deemed ineffective if use of the technology results in water outages or pressure reduction below 20 pounds per square inch gage (20 PSIG) during any three months during a running 12-month period over the life of the performance period;
c. The public water system shall maintain financial resources to replace the new technology with standard technology during the life of the contract. The reserve funds needed shall be initially based on the standard technology cost estimate from the engineering report and shall be increased annually for inflation using the federal consumer price index (or other suitable index);

DRAFT

d. The public water system will provide the operation and maintenance, including operator and maintenance personnel training, as outlined in the engineering report;
e. The public water system will collect and record all operation, maintenance, and cost records and perform all analysis outlined in the engineering report;
f. The public water system shall obtain the services of a professional engineer registered in Missouri to oversee data collection, record keeping, and provide a complete engineering analysis of the new technology after one year of operation, after the performance period is completed, and (if needed) following the Department issuing a preliminary intent to declare the technology ineffective for this public water system. The professional engineer shall submit two copies of the engineering analysis to the Department within six months of the end of the first year, within six months of the end of the performance period, and within six months of the Department issuing a preliminary intent to declare the technology ineffective for this public water system. This engineering analysis shall evaluate the effectiveness of the new technology for its intended purpose and list all data and calculations supporting this evaluation, note any problems with operation or maintenance and including how, when, or if these problems were solved, note actual times spent operating and maintaining the new technology and compare these with those estimated in the engineering report, calculate costs of operating and maintaining the new technology and compare these with those estimated in the engineering report, complete a reassessment of the expected life of major components of the new technology, include the engineer's conclusion as to whether or not this technology was effective for this public water system and include the engineer's recommendation (with any reservations) as to whether or not this technology should be widely approved for similar application;
g. If the public water system has maximum contaminant level violations, action level violations, treatment technique violations, or low pressure violations at the frequency noted above in items a. and b., that, in the Department's opinion, could be the result of use of the new technology, the Department shall issue a preliminary intent to declare the new technology ineffective for this public water system. The public water system shall then submit the engineering evaluation within the time frame noted above in item f.;
h. The Department shall review the engineering evaluation and conduct other investigations as it deems necessary including, but not limited to, investigations by Department employees or contractors, invitations to submit analysis from the vendor, manufacturer, and original project engineer (if different from the evaluation engineer). Within six months of submittal of the engineering evaluation by the public water system, the Department shall make a formal determination of whether or not the new technology is ineffective for this public water system; and
i. If the Department formally determines the new technology is ineffective for this public water system, the public water system shall:
    1. Within 180 calendar days, submit engineering plans and specifications prepared by a professional engineer registered in Missouri and a

completed construction permit application to the Department for replacing the new technology with the standard technology identified in the original engineering report;

2. Within 30 calendar days of receipt of any request from the Department for additional information or changes in the engineering plans and specifications, the public water system shall submit these alterations to the Department;
3. Within 180 calendar days of the Department's approval to construct, the public water system shall construct the new facilities; and
4. Within 21 calendar days of completion of construction, the public water system shall submit certification by the professional engineer stating that the project has been substantially completed in accordance with the approved plans and specifications to the Department.

1.1.7.5. Performance period

The length of the performance period shall be the lesser of 60 months or the expected life of the major components of the new technology. The life of the contract shall be the performance period plus 12 months, which includes six months for the engineering analysis and six months for the Department's final determination of effectiveness.

1.1.7.6. Performance follow-up

Initially, the Department will approve only one project for a particular new technology statewide. After the Department completes review of the one year engineering evaluation of this first project, the Department may approve an additional nine projects for a particular new technology statewide. If any project is formally declared to be ineffective, all approvals shall cease until the Department reassesses the new technology and determines if the failure was site specific or more general.

After the completion of ten successful projects for a particular new technology and Department review of all engineering evaluations, the Department may develop design standards allowing the new technology to become standard technology or may allow additional projects to gather more information if needed. Ultimately, the Department will either develop standards or will declare the new technology inappropriate for use in Missouri.

1.1.8. Project Sites

The area and approximate geometry of the proposed site shall be identified and the adequacy for adding additional facilities on the site, and for providing adequate security. The proximity of residences, industries and other establishments shall be identified and their effect on the safety, security, operation and maintenance of facilities.

a. Projects located in areas that are subject to a significant risk from earthquakes, floods, fires, pollution or other disasters which could cause a breakdown of the

DRAFT

public water system shall be designed to protect the facilities to the extent practical; and

b. Systems shall not be located on sites with any potential sources of pollution or other factors that may influence the quality of the supply or interfere with effective operation of the water works system, such as sewage absorption systems, septic tanks, privies, cesspools, sinkholes, sanitary landfills, refuse and garbage dumps.

1.2. Plans.

Plans for water systems shall be legible and no larger than standard size 24 inches by 36 inches.

1.2.1. Plans shall include the following:

a. Suitable title identifying the project, and index;
b. The name of the Continuing Operating Authority responsible for the water supply;
c. The name of the public water ~~supply~~ system, or proposed public water supply system;
d. The public water ~~supply~~ system's ID number;
e. Scale, in feet;
f. North point;
g. Latest U.S.G.S. datum and topographical elevations for new and existing tanks determined from surveys beginning at USGS or Department elevation monuments;
h. Legible prints suitable for reproduction;
i. Date, name, and address of the designing engineer;
j. Imprint of professional engineer's seal in conformance with State of Missouri's engineering registration requirements;
k. Boundaries of area to be served;
l. Location and size of existing water mains;
m. Location and nature of existing water system structures and appurtenances affecting the proposed improvements, noted on one sheet;
n. Location and description of existing and proposed sewerage system;
o. Location of proposed water mains and water system structures, with size, length and identity;
p. Contour lines at suitable intervals; and
q. Names of streets and roads.

1.2.2. Detailed plans include:

a. Stream crossings, providing profiles with elevations of the streambed, general geology under the stream bed and the normal and extreme high and low water levels;
b. Profiles, where necessary, having a horizontal scale of not more than 100 feet to the inch and a vertical scale of not more than ten feet to the inch, with both scales clearly indicated. (Note: This does not apply to entire distribution systems.);
c. Location and size of the property to be used for the water works development with respect to known references such as roads, streams, section lines, or streets;

DRAFT

d. Topography and arrangement of present or planned wells or structures, with contour intervals not greater than two feet;
e. One hundred-year flood plain or elevations of the highest known flood level, floor of the structure, upper terminal of protective casings and outside surrounding grade, using United States Coast and Geodetic Survey, United States Geological Survey or equivalent elevations where applicable as reference;
f. Plat and profile drawings of well construction, showing the diameter and depth of drill holes and casings; liner diameters; grouting depths; elevations and designation of geological formations; water levels and other details to describe the proposed well completely;
g. Location of all existing and potential sources of pollution within not less than 300 -foot radius of the source, and within 300 feet of underground treated water storage facilities;
h. Size, length, and identity of sewers, drains, and water mains, and their locations relative to plant structures;
i. Schematic flow diagrams and hydraulic profiles showing the flow through various plant units;
j. All piping in sufficient detail to show dimensions, elevations, sectional views, and flow through the plant, including waste and chemical feed lines;
k. Locations of all chemical storage areas, feeding equipment, and points of chemical application;
l. All appurtenances, specific structures, equipment, water treatment plant waste disposal units, and points of discharge having any relationship to the plans for water mains and/or water system structures;
m. Locations of sanitary or other facilities, such as lavatories, showers, toilets, floor drains, etc.;
n. Locations, dimensions, and elevations of all proposed plant facilities;
o. Locations of all sampling taps;
p. Dimensional plans of elevation, sectional and detailed views of all process and storage tanks; and
q. Adequate description of any features not otherwise covered by the specifications.

1.3. Specifications.

Complete, detailed technical specifications shall be supplied for the proposed project, including:

a. A description of how existing water system facilities will continue in operation during renovation or construction of additional facilities to minimize interruption of service;
b. The specification of laboratory facilities and equipment;
c. The number and design of chemical feeding equipment;
d. A description of materials or proprietary equipment for sanitary or other facilities including necessary cross connection protection;
e. The specification of manufactured products such as pipe, valves, fittings, hydrants, steel, Portland cement, etc. by the appropriate national standard, sufficient to differentiate the exact product. Any stamp or marking required to identify the product as meeting the national standard and an affidavit from the manufacturer stating that the product meets the national standard. The standard names, number, effective date, publication date, name and address of the organization issuing the standard shall identify the national standard. Specifications for

DRAFT

manufactured products may also include the complete detailed national standard at the discretion of the engineer;

f. All procedures, methods, testing requirements, and products except manufactured products noted in paragraph 1.3.e. above, specified by the appropriate national standard and all details of the national standard needed to properly construct the water system component shall be included in the specifications. The standard name, number, effective date, publication, name and address of the organization issuing the standard shall identify the national standard;
g. Where performance specifications are used, shop drawings must be provided;
h. Provisions for training of system operators to be provided by equipment manufacturers or suppliers concerning the operation and maintenance of the new facilities. The fulfillment of the training requirements will not be complete until system officials certify that adequate training has been provided;
i. Requirement for operation and maintenance manuals to be provided to the system by equipment manufacturers or suppliers on equipment and systems installed;
j. An executive summary describing the way a SCADA or other process instrument control system is intended to function; and
k. Requirements that coatings, sealants, additives, piping, fittings, appurtenances and materials in direct contact with the water shall meet National Science Foundation (NSF) Standard 61 to prevent imparting of harmful substances into the water. Untreated materials that are historically used in water treatment plant construction such as concrete, steel, iron, aluminum, stainless steel, redwood, ~~C~~cyprus, fiberglass, etc. are not required to have NSF approval.

1.4. Summary of Design Criteria.

A summary of complete design criteria shall be submitted for the proposed project, containing but not limited to the following:

a. Long term dependable yield of the source of supply;
b. Reservoir surface area, volume, and a volume versus depth curve;
c. Area of watershed;
d. Estimated average and maximum day water demands for the design period;
e. Number of proposed services;
f. Firefighting requirements; and
~~g.~~
~~h.~~g. Chemical feeder capacities and ranges.

1.5. Additional Information Required.

The Department may require additional information, which is not part of the construction drawings, such as head loss calculations, proprietary technical data, copies of deeds, copies of contracts, shop drawings, etc.

1.6. Revisions to Approved Plans.

a. Any deviation from approved plans or specifications affecting capacity, hydraulic conditions, operating units, the functioning of water treatment processes, or the quality of water to be delivered must be approved in writing before such changes are made.

DRAFT

b. Revised plans or specifications shall be submitted to the Department for review and approval before any construction work affected by such changes is started.

1.7. Final Approval of Construction.

a. Final construction approval or a written interim approval to operate must be obtained from the Department for all projects for which approval is required before that project is placed into service.
b. Upon completion of the construction, the engineer must:
    1. Notify the Department and establish a mutually satisfactory time for making a final inspection, certify in writing that the construction is substantially completed in accordance with approved plans and specifications and change orders;
    2. Submit one hard copy, and one electronic copy of as-built plans to the Department in accordance with 10 CSR 60-010;
        i. Any modifications to the project not shown on the approved plans and specifications must be reflected in as-built drawings.;
    3. Show that water quality is acceptable to the Department;
    4. Submit the final cost of the project with all components of cost identified;
    5. Provide O&M manuals to system operators on systems and equipment installed; and
    6. Submit a statement of work completed.
c. In larger projects, an interim (partial) approval may be secured for the completed parts of the water system before they are placed in service.

DRAFT

Chapter 2 - General Design Considerations

2.0. General.

The design of a water supply system or treatment process encompasses a broad area. Application of this chapter depends on the type of system or process involved.

2.1. Design Basis.

The system shall be designed for maximum day demand at the design year.

2.2. Plant Layout.

Design of new treatment plants, well houses and pump stations shall consider:

a. Functional aspects of the plant layout;
b. Provisions for future plant expansion;
c. Provisions for expansion of the plant waste treatment and disposal facilities;
d. Access roads, driveways, walks, and fencing;
e. Site grading and drainage;
f. Chemical delivery and storage facilities;
g. Security of facilities; and
h. Provisions for safety.

2.3. Building Layout.

Design shall provide for:

a. Adequate ventilation, lighting, emergency lighting, heating, and floor drainage;
b. Dehumidification equipment, if necessary;
c. Accessibility of equipment for operation, servicing, and removal;
d. Flexibility of operation, convenience of operation, and operator safety;
e. Chemical storage and feed equipment in separate rooms to reduce hazards and dust problems;
f. Adequate facilities should be included for shop space and storage, consistent with the designed facilities; and
g. Adequate number of emergency exits.

2.4. Site Selection Requirements.

a. The site should not be subject to significant risk from floods, fires, pollution, or other disasters, which could cause breakdown of the system or portion thereof.
b. Non-submersible intake pumping equipment and accessories must be located or protected to at least four feet above the 100-year flood elevation or the highest flood elevation on record.
c. The Department must be consulted regarding any structure that may impede normal or flood stream flows.
d. In earthquake prone areas, structures should be designed to withstand earthquake effects.
e. The site should provide all-weather access road to all significant facilities.

DRAFT

2.5. Security and Safety Measures.

a. All water system facilities shall be designed to include measures to provide protection against vandalism, sabotage, terrorist acts, or access by unauthorized personnel. Protection measures may include, but is not limited to:
   1. Lockable doors and access ways;
   2. Secured outdoor electrical and control systems;
   3. Windows designed to deter human entrance;
   4. Exterior lighting sufficient to provide safe access and to deter vandalism and sabotage; and
   5. Fencing around vulnerable areas of drinking water facilities such as treatment and storage facilities, pumping stations and wells with signs prohibiting unauthorized access.

b. Unless otherwise noted in this document, design and construction of all ladders, stairways, handrails, safety cages, fall protection and other safety appurtenances for water system facilities shall conform to the latest federal Occupation Safety and Health Administration (OSHA) Regulation 29 CFR, Part 1910, Subpart D, Occupational Safety and Health Standards, General Industry Standards. Safety appurtenances shall also conform to any applicable local ordinances, codes, standards or portion thereof that are more stringent than the OSHA standards.

2.6. Electrical Controls.

Main switch gear electrical controls shall be located above grade, and in areas not subject to flooding.

2.7. Standby Power.

For the system's own protection, standby power or an alternate power source should be provided for water supplies that provide essential services or require continuous service so that water may be treated and pumped to the distribution system during power outages to meet average day demand.

2.8. Laboratory Equipment.

Each public water supply shall have its own equipment and facilities for routine laboratory testing necessary to ensure proper operation. Laboratory equipment selection shall be based on the characteristics of the raw water source and the complexity of the treatment process involved. Laboratory test kits that simplify procedures for making one or more tests may be acceptable. Analyses conducted to determine compliance with drinking water regulations must be performed in an appropriately certified laboratory in accordance with "Standard Methods for the Examination of Water and Wastewater", methods recommended by the USEPA in their list of approved methods or by methods approved by the Department. Persons designing and equipping facilities for which laboratory certification by the Department is desired shall confer with the Department before beginning the preparation of plans or the purchase of equipment. Methods for verifying adequate quality assurance and for routine calibration of equipment shall be provided.

DRAFT

2.8.1. Testing equipment

a. Surface water supplies:
   1. Shall have a bench model Nephelometric turbidimeter;
   2. Shall have continuous Nephelometric turbidity monitoring and recording equipment on effluent lines located such that both filter effluent and filter-to-waste can be monitored;
   3. Shall have electrode pH meter;
   4. Shall have equipment necessary to perform jar test;
   5. Shall have titration equipment for both hardness and alkalinity; and
   6. Should provide the necessary facilities for microbiological testing of water from both the treatment plant and the distribution system.

b. Groundwater supplies, where pertinent:
   1. Shall have test equipment capable of accurately measuring iron and manganese to a minimum of 0.05 milligram per liter;
   2. Shall have electrode pH meter;
   3. Shall have titration equipment for both hardness and alkalinity; and
   4. With lime softening facilities, should have a Nephelometric turbidimeter.

c. Public water supplies that:
   1. Chlorinate shall have test equipment for determining both free and total chlorine residual by methods in "Standard Methods for the Examination of Water and Wastewater";
   2. Fluoridate shall have test equipment for determining fluoride by methods in "Standard Methods for the Examination of Water and Wastewater"; and
   3. Feed polyphosphates and/or orthophosphates shall have test equipment capable of accurately measuring phosphates from 0.1 to 20 mg/L.

2.8.2. Physical facilities

Sufficient bench space, adequate ventilation, adequate lighting, electrical receptacles, storage room, laboratory sink, and auxiliary facilities shall be provided. Air conditioning may be necessary.

2.9. Monitoring and Recording Equipment.

All water treatment plants with a capacity of 0.5 MGD or more should be provided with continuous monitoring and recording equipment to monitor water being discharged to the distribution system.

a. Plants treating surface water and plants using lime for softening:
   1. Shall have the capability to monitor and record free or combined chlorine residual, temperature and pH; and
   2. Should have monitoring of the parameters to evaluate adequate CT disinfection, such as residuals, pH and water temperature.

b. Plants treating ground water using iron removal and/or ion exchange softening should have the capability to monitor and record free chlorine residual.

DRAFT

2.10. Sample Taps.

a. Sample taps shall be provided so that water samples can be obtained from each water source and from appropriate locations in each unit operation of treatment.
b. Taps shall be consistent with sampling needs and shall not be of the petcock type.
c. Taps used for obtaining samples for bacteriological analysis shall be of material that resist flaming, smooth-nosed type without interior or exterior threads, shall not be of the mixing type, and shall not have a screen, aerator, or other such appurtenances.
d. The location of sample taps shall consider safety and ease of access for the operator, including the height above the floor, and the drainage of flushed water.
e. Ground water sources require at least one sample tap prior to any chemical treatment for compliance with the Ground Water Rule.
f. At least one sample tap after treatment and contact time is required for monitoring the treatment processes.

2.11. Facility Water Supply.

a. The facility water supply service line and the plant finished water sample tap shall be supplied from a source of finished water at a point where all chemicals have been thoroughly mixed, and the required disinfectant contact time has been achieved.
b. There shall be no cross-connections between the facility water supply service line and any piping, troughs, tanks, or other treatment units containing wastewater, treatment chemicals, raw or partially treated water.

2.12. Wall Castings.

Consideration shall be given to providing extra wall castings built into the structure to facilitate future uses whenever pipes pass through walls of concrete structures.

2.13. Meters.

All water supplies shall have an acceptable means of metering the raw water flow, finished water flow, flow through the treatment plant, and treatment plant service flow.

2.14. Piping Color Code.

To facilitate identification of piping in plants and pumping stations the color scheme in Table 1 is recommended.

In situations where two colors do not have sufficient contrast to easily differentiate between them, a six-inch band of contrasting color should be on one of the pipes at approximately 30-inch intervals. The name of the liquid or gas should also be on the pipe. In some cases, it is also advantageous to provide arrows indicating the direction of flow.

DRAFT

Table 1 – Piping Color Code

TYPE OF PIPE	PIPE COLOR
WATER LINES	
Raw	Olive
Settled or Clarified	Aqua
Finished or Potable	Dark Blue
CHEMICAL LINES	
Alum or Primary Coagulant	Orange
Ammonia	White
Carbon Slurry	Black
Caustic	Yellow with Green Band
Chlorine (Gas and Solution)	Yellow
Fluoride	Light Blue with Red Band
Lime Slurry	Light Green
Ozone	Yellow with Orange Band
Phosphate Compounds	Light Green with Red Band
Polymers or Coagulant Aids	Orange with Green Band
Potassium Permanganate	Violet
Soda Ash	Light Green with Orange Band
Sulfuric Acid	Yellow with Red Band
Sulfur Dioxide	Light Green with Yellow Band
WASTE LINES	
Backwash Waste	Light Brown
Residuals	Dark Brown
Sewer (Sanitary or Other)	Dark Gray
OTHER	
Compressed Air	Dark Green
Gas	Red
Other Lines	Light Gray

2.15. Disinfection.

All wells, pipes, tanks, and equipment which can convey or store potable water shall be disinfected in accordance with the current AWWA procedures. Plans or specifications shall outline the procedure and include the disinfectant dosage, contact time, and method of testing the results of the procedure.

2.16. Manuals and Parts List.

Provisions for supplying the water system with an operation and maintenance manual including a parts list, parts order form, and written instruction for start-up of the plant or station is required for approval of any proprietary unit installed in the facility

DRAFT

2.17. Other Considerations.

Consideration must be given to the design requirements of other federal, state, and local regulatory agencies for items such as safety requirements, special designs for the handicapped, plumbing and electrical codes, construction in a flood plain, etc.

2.18. Automation.

The Department encourages measures, including automation, which assist operators in improving plant operations and surveillance functions. Automation is not a substitute for qualified staffed operation and maintenance and all treatment plants must be staffed by qualified operators for what the Department determines to be an appropriate part of each working day. Off-site automated operation of groundwater treatment facilities will be considered on a case by case basis. Automated, unstaffed, unsupervised operation of a surface water treatment facility does not adequately protect public health and is generally not acceptable. Automation of surface water treatment facilities to allow unattended operation with staffed off-site control presents a number of management and technological challenges that must be overcome before an approval can be considered. Automation of any type of treatment facility requires that each facet of the plant facilities and operations must be fully evaluated to determine what on-line monitoring is appropriate, what alarm capabilities must be incorporated into the design and what staffing is necessary. Consideration must be given to the consequences and operational response to treatment challenges, equipment failure and loss of communications or power.

The engineering report to be submitted to the Department for review must cover all aspects of the treatment plant and automation system including the following information and criteria:

a. Identification of all critical features in the pumping and treatment facilities that will be electronically monitored, have alarms that directly contact a qualified operator, and can be operated automatically or off-site via the control system. Include a description of automatic plant shutdown controls with alarms and conditions that would trigger shutdowns. Dual or secondary alarms may be necessary for certain critical functions;
b. Provision for automated monitoring of all critical functions with major and minor alarm features. Automated plant shutdown is required on all major alarms. Automated remote startup of the plant is prohibited after shutdown due to a major alarm. The control system must have response and adjustment capability on all minor alarms. Built-in control system challenge test capability must be provided to verify operational status of major and minor alarms;
c. The plant control system that has the capability for manual operation of all treatment plant equipment and process functions;
d. A plant flow diagram that shows the location of all critical features, alarms and automated controls to be provided;
e. Description of off-site control station(s) that allow observation of plant operations, receiving alarms and having the ability to adjust and control operation of equipment and the treatment process;
f. Description of optimal staffing for the plant design, including meeting requirements in 10 CSR 60-14.010 for certified operators; an on-site check at least once per day by a certified operator to verify proper operation and plant security; and sufficient appropriate staffing to carry out daily on-site evaluations, operational functions, and maintenance and calibration of all critical treatment components and monitoring equipment and weekly checks of the

DRAFT

communication and control system to ensure reliability of operations. Challenge testing of such equipment should be part of normal maintenance routines;

g. Description of operator training planned or completed in both process control and the automated system;
h. Operations manual, which gives operators step-by-step procedures for understanding and using the automated, control system under all water quality conditions. Emergency operations during power or communications failures or other emergencies must be included;
i. A plan for a 6-month or more demonstration period to prove the reliability of procedures, equipment and surveillance system. A certified operator must be on duty during the demonstration period. The final plan must identify and address any problems and alarms that occurred during the demonstration period. Challenge testing of each critical component of the overall system must be included as part of the demonstration project;
j. A schedule for maintenance of equipment and critical parts replacement;
k. Provision for sufficient finished water storage to meet system demands and CT requirements whenever normal treatment production is interrupted as the result of automation system failure or plant shutdown; and
l. Provision for ensuring security of the treatment facilities at all times. Incorporation of appropriate intrusion alarms must be provided which are effectively communicated to the operator in charge. See section 2.5 Security Measures.

DRAFT

This page intentionally left blank

DRAFT

Chapter 3 - Source Development

3.0. General.

In selecting the source of water to be developed, the design engineer must prove that an adequate quantity of water will be available. The proposed groundwater or surface water source must be adequate for future water demands during the design period. Water that is to be delivered to the consumers will meet the current requirements of the Department with respect to microbiological, physical, and chemical. Each public water system should take its raw water from the highest quality and sustainable source that is economically reasonable and technologically possible.

3.1. Surface Water.

A surface water source includes all tributary streams and drainage basins, natural lakes, and artificial reservoirs above the point of water supply intake. A source water protection plan enacted for continued protection of the watershed from potential sources of contamination should be developed by the Continuing Operating Authority for all new surface water sources.

3.1.1. Quantity

a. Reservoir storage volume shall provide a reasonable surplus for reserve storage. A reasonable amount of surplus reserve storage should be considered in order to maintain public confidence in the reliability of supply at predicted depletion levels during a prolonged severe drought. A minimum of 120 days surplus reserve storage should be considered.
b. Reservoir storage volume shall provide for anticipated growth for a period of at least 20 years.
c. Reservoir storage volume shall be adequate to compensate for all losses such as silting, evaporation, seepage, stagnation, and required discharges to maintain downstream flows.
d. When multiple water sources are provided, the amount of water needed from the proposed reservoir shall be stated and that amount plus water losses due to sediment, evaporation, seepage, and stagnation shall be used to design the reservoir capacity.
e. The capacity of a water supply reservoir shall be determined by using a reservoir operations model such as the USDA Natural Resource Conservation Service's Procedures for Determining Runoff and Reservoir Operation Study. A reservoir study shall be conducted for the drought of record using future design period demand for the water system. The design draft shall include water losses due to sediment, evaporation, seepage, and stagnation as well as the predicted water system demand. Losses due to sediment shall be the accumulated loss predicted at the end of the design period of the reservoir. Climatic data such as precipitation and evaporation used shall be as specific to the proposed reservoir site as is possible. The usable quantity of water in a reservoir shall be sufficient to provide carryover storage at all design future demands and shall include a sufficient reserve to maintain public confidence in the reliability of supply at predicted depletion levels. Water supply availability and storage capacity must

DRAFT

meet future water demands of all water users through the multiyear drought of record, presently from 1953 through 1958.

f. When a river or stream is to be used as the sole source of water, the flow in the river or stream shall exceed the current registered and future downstream uses, instream flow recommendations, usually the 7 day Q 10 flow rate, and the design year future water system demand. Historical data must be used to determine that stream flows are adequate. Where the nearest gauging station is downstream of the intake site, a drainage area ratio or other approved method to represent the intake location must adjust the flow data. Data from an upstream station may be used. For streams where data does not cover the drought of record, data from similar streams may be used to correlate or predict stream flows, with Department approval.

g. The necessary permits and approvals to install an intake into a stream or river shall be obtained. The conditions on a permit may significantly affect the quantity and rate that may be pumped and the carryover storage required. The usable capacity of the raw water storage reservoirs shall provide carryover storage for the worst case conditions of record. Design demand analysis from the stream or river shall meet all predicted system demands, shall meet permit conditions, shall include the ability to refill the off-stream reservoirs and shall account for evaporation and seepage from all the reservoir storage structures.

h. Where pumping is used to supplement runoff to a water supply reservoir, a reservoir operation study shall be developed to determine if stream flows, runoff and carryover storage are adequate. The design demand shall include water losses due to evaporation and seepage, all reservoir design life sediment storage, dead pool, losses and all the predicted water system demand. A written pumping plan shall be provided that includes the minimum lake level that will be allowed before pumping is initiated, and the recommended pumping rates and quantities. The pumping plan must take into account water quality concerns, such as increased settable solids, turbidity, and microbiological and chemical constituents due to storm runoff events, thereby reducing the amount of available pumping.

3.1.2. Quality

A study shall be made of the factors, both natural and manmade, which may affect water quality in the water supply stream, river, lake, or reservoir. Such survey and study shall include, but may not be limited to:

a. Determining possible future uses of lakes or reservoirs;

b. Determining the owner's degree of control over the watershed;

c. Assessing the degree of hazard to the supply posed by agricultural, domestic or industrial contaminant sources in the watershed. Sources include, but may not be limited to municipal and industrial wastewater treatment plants, animal feeding operation lagoons, recreational and residential activities or any other activity that may result in accidental spillage of materials that may be toxic, harmful, or detrimental to treatment processes;

d. Assessing all waste discharges (point source and non-point sources) and activities that could impact the water supply. The location of each waste discharge shall be shown on a scale map;

DRAFT

e. Obtaining samples over a sufficient period of time to assess the microbiological, physical, and chemical characteristics of the water;
f. Assessing the capability of the proposed treatment process to reduce contaminants to applicable standards;
g. Considerations of current, wind and ice conditions, and the effect of confluencing streams; and
h. Development, to the extent possible, of a watershed protection plan.

3.1.3. Structures

3.1.3.1. Design of intake structures

a. During design of intake structures, consideration should be given to providing methods to clean submerged intake structure screens.
b. Design shall provide for:
    1. Withdrawal of water from more than one level if quality varies with depth;
    2. Separate facilities for release of less desirable water held in storage;
    3. Limiting the velocity of flow into the intake structure to a minimum, generally not to exceed 0.5 foot per second, where frazil ice may be a problem;
    4. Occasional cleaning of the inlet line;
    5. Adequate protection against rupture by dragging anchors, ice, etc.;
    6. Ports located above the bottom of the stream, lake or reservoir, but at sufficient depth to be kept submerged at low water;
    7. A diversion device capable of keeping large debris from entering an intake structure, where shore wells are not provided;
    8. Where deemed necessary, provisions shall be made for the intake structure to control the influx of zebra mussels or other aquatic nuisances. Specific methods to control zebra mussels shall be approved by the Missouri Department of Natural Resources;
    9. When buried surface water collectors are used, sufficient intake opening area must be provided to minimize inlet headloss. An entrance velocity of 0.1 feet per second is recommended. Particular attention should be given to the selection of backfill material in relation to the collector pipe slot size and gradation of the native material over the collector system; and
    10. Devices restricting access to intakes.

3.1.3.2. Raw water pumping wells and transmission mains shall

a. Have necessary motors and electrical controls and non-submersible pumps and motors located above grade and protected from flooding as required by the Department;
b. Be accessible but have devices restricting access to only authorized personnel;
c. Be designed against flotation;
d. Be equipped with removable or traveling screens before the pump suction well;
e. Provide for introduction of chlorine or other chemicals in the raw water transmission main if necessary for quality control;

DRAFT

f. Have valves and provisions for flushing or cleaning by a mechanical device and testing for leaks;
g. Have provisions for withstanding surges and be protected against damage by floating debris where necessary;
h. Not provide water services on raw water transmission mains to residences, farming operations or other retail or wholesale customers without the knowledge and approval of the Department and without providing the storage, pressure tanks, pumps and other equipment necessary to adequately supply any services allowed; and
i. Provide meters on any water services on a raw water transmission main.

3.1.3.3. Raw water storage reservoir

An off-stream raw water storage reservoir is a facility into which water is pumped during periods of good quality and high stream flow for future release to treatment facilities. Raw water storage reservoirs shall be constructed so that:

a. Water quality is protected by controlling runoff into the reservoir;
b. Dikes are structurally sound and protected against wave action and erosion;
c. Intake structures and devices meet the requirements of section 3.1.3.1.;
d. Point of influent flow is separated from the point of withdrawal;
e. Separate pipes are provided for influent to and effluent from the reservoir;
f. Raw water sediment is either removed prior to discharge to the reservoir or that multiple reservoirs or cells are provided to allow continued service with a reservoir or cell removed from service for sediment removal; and
g. A bypass line is provided around the reservoir to allow direct pumping to the treatment facilities.

3.1.4. Lakes and reservoirs

3.1.4.1. Site preparation shall provide, where applicable:

a. Removal of brush and trees to high water elevation;
b. Protection from floods during construction; and
c. Proper abandonment of all wells that will be inundated, in accordance with subparagraph 3.2.5.13.

3.1.4.2. Construction may require:

a. Approval from the appropriate regulatory agencies of the safety features for stability and spillway design;
b. A permit from an appropriate regulatory agency for controlling stream flow or installing a structure on the bed of a stream or interstate waterway;
c. A permit from the Department of Natural Resources' Water Pollution Control Branch for land disturbance;
d. Restricted access to the dam; and
e. A 300-foot green belt around the perimeter of each water supply lake.

DRAFT

3.1.4.3. Construction shall require:

Formatted: Keep with next

a. Silt basins and erosion control structures as a part of the lake design. Instead of providing additional lake volume for silt, silt catch basins should be provided;
b. Silt basin design that allows the basin(s) to be drained and silt routinely removed from the basins; and
c. Sufficient fencing around the lake to prevent access to the lake by livestock.

3.1.4.4. Water supply dams

Water supply dams shall be constructed in accordance with the design guidelines of the Missouri Dam and Reservoir Safety Council regardless of the height of the dam.

3.1.4.5. Recreational uses of public water supply lakes

Every supplier of water to a public water system must apply for and secure the approval of the Department before permitting the use of public water supply impoundments for recreational usage.

a. Regulated recreational activities are permitted when provisions for such activities are included in the original planning, construction, and approval of the impoundment and water treatment facilities.
b. Recreational activities proposed for existing impoundments will be appraised in the light of the effect on the primary purposes of the impoundment, the capability of the water treatment processes, the physical adaptability of the impoundment to the desired recreational use, and the maintenance of public confidence in the water supply.
c. Provisions shall be made for local enforcement of all rules and ordinances governing recreation. Rules must be posted and maintained in legible condition at conspicuous points in the impoundment area. If rules and ordinances cannot be effectively enforced, recreation shall not be provided.

3.1.5. Zebra Mussel Control

If it is determined that chemical treatment is warranted for the control of zebra mussels:

a. Chemical treatment shall be in accordance with Chapter 5, and shall be acceptable to the Department;
b. A spare solution line should be installed to provide redundancy and to facilitate the use of alternate chemicals; and
c. The chemical feeder shall be interlocked with plant system controls to shut down automatically when the raw water flow stops.

DRAFT

3.2. Groundwater.

A groundwater source includes all water obtained from dug, drilled, bored, driven wells and infiltration lines. Additional information is available in Appendix D.

Section 640.116 RSMo provides special well construction exemptions for a public water system constructed after August 28, 2011 that exclusively serves a benevolent or charitable organization and does not serve a school or daycare or provide water to more than 100 persons more than 60 days per year. ~~Such public water systems are exempt from all rules relating to well construction except any rules established under sections 256.600 to 256.640 applying to multifamily wells, unless such wells or pump installations for such wells are determined to present a threat to groundwater or public health. Systems claiming this exemption must provide documentation with the application for construction authorization that substantiates the claim.~~Such public water systems may use multifamily well construction standards, and will be considered on a case-by-case basis. The Department may deny an exemption if the well or pump installation for such well is determined to present a threat to groundwater or public health.

3.2.1. Quantity

3.2.1.1. Minimum capacity

The total developed groundwater source capacity shall equal or exceed the design maximum day demand.

3.2.1.2. Number of sources

In determining the minimum number of wells needed, the supplier of water should consider such factors as the amount of system storage, the critical nature of businesses being served by the water system (for example, hospitals), and the amount of water needed.

a. Because radial wells and wells drilled into unconsolidated formations must be routinely removed from service for cleaning and redevelopment, all water systems served by these wells should have more than one well and should be capable of meeting maximum day demand with the largest producing well out of service.
b. All public water systems that require continuous service and serve 500 or more people shall have more than one well and shall be capable of meeting design average day demand with the largest producing well out of service or an alternate approved source of water capable of meeting the design or actual average day demand.
c. Public drinking water systems serving less than 500 people should have more than one well, or an alternate source of supply, such as an interconnection with another water system, and should be capable of meeting design average day demand with the largest producing well out of service.

3.2.1.3. Auxiliary power

a. When power failure would result in cessation of minimum essential service, sufficient power should be provided to meet average day demand through portable or in-place auxiliary power.

DRAFT

b. When automatic pre-lubrication of pump bearings is necessary, and an auxiliary power supply is provided, design shall assure that the pre-lubrication is provided when auxiliary power is in use.

3.2.2. Quality

3.2.2.1. Water quality

A study shall be made of the factors, both natural and man-made, which may affect water quality in the well and aquifer. Such survey and study sh~~a~~oul~~l~~d include, but may not be limited to obtaining samples ~~over a sufficient period of time to assess the microbiological and~~ to determine physical, chemical, and biological characteristics ~~of the water including dissolved gases, and chemical characteristics~~that may require additional design considerations.

3.2.2.2. Microbiological quality

a. Tools, pumps, pipe, gravel pack material, drilling equipment and water used during drilling should be treated with 200 mg/L chlorine solution. Wells should be tested for any signs of iron or sulfur bacteria contamination after drilling. If possible, the water in the aquifer should be tested before drilling a production well to determine if iron or sulfur reducing bacteria are naturally present. If iron or sulfur reducing bacteria is found, facilities shall be installed to provide for routine treatment of the well, continuous chlorination to prevent bacteria growth in the distribution system and pigging of raw water lines where appropriate

b. Disinfection of every new, modified or reconstructed groundwater source shall be:
   1. In accordance with the latest AWWA Standard C-654;
   2. Provided after completion of work if a substantial period elapses prior to test pumping or placement of permanent pumping equipment;
   3. Provided after placement of permanent pumping equipment; and
   4. Provided any time the pump or column pipe is removed or replaced.

c. After disinfection, one or more water samples shall be submitted to a laboratory certified by the Department for microbiological analysis and the results reported to the Department prior to placing the well into service. Before placing the well in service, water samples for microbiological analysis shall test absent for coliform bacteria on two consecutive days from wells drilled in consolidated formations unless the water will be continuously disinfected with the required contact time before being dispensed. Water from wells that are provided with continuous disinfection and the required contact time before being dispensed is not required to meet the above microbiological standards. Microbiological analysis of water samples from these wells shall be done to determine the degree and extent of microbiological contamination present but the presence of coliform bacteria is not grounds for rejection of these wells. However, tests for more than total coliform bacteria should be considered.

DRAFT

3.2.2.3. Physical and, chemical characteristics

a. Every new, modified, or reconstructed groundwater source shall be examined for applicable physical and chemical characteristics by tests of a representative sample in a laboratory certified by the Department, for those contaminants as required by the Department.
b. Samples shall be collected and analyzed at the conclusion of the test pumping procedure.
c. Field determinations of physical and chemical constituents or special sampling procedures may be required by the Department.

3.2.3. Location

3.2.3.1. Well location

a. Prior to design and construction, the Department of Natural Resources Regional Office serving the area in which the well will be located shall be consulted regarding a proposed well location as it relates to the required separation between existing and potential sources of contamination and groundwater development.
b. The Department of Natural Resources' Water Resource Center shall be consulted prior to design and construction regarding a proposed well location as it relates to required well depth and casing depth, for consolidated formations.
c. Prior to construction, sufficient information shall be submitted to the Department to determine if adequate spacing will be provided between the proposed well or well field and existing active public water supply wells. The Department may require that pump tests be done on the closest active existing well. Pump test data submitted shall be acceptable to the Department and pump tests shall be performed in accordance with section 3.2.4 of this document. Existing pump tests data may be used if the methods and quality of the data are acceptable to the Department. Where multiple wells that will be pumped at the same time are proposed in a new area, test holes should be drilled and pumped simultaneously to determine the spacing necessary to prevent interference between wells.

3.2.3.2. Isolation standards

a. Unless the geology and aquifer hydraulics dictate greater or lesser distances, or unless the Department approves a lesser distance based on the engineering report, acceptance of the well site, for new wells, shall be based on compliance with the radii in Table 2.

DRAFT

Table 2 – New Well Isolation Radii

Source of Possible Contamination	Minimum Isolation Radius
Wastewater treatment plants, wastewater lagoons, chemical storage, landfills, any liquid petroleum storage tanks, any surface or subsurface wastewater and solid waste disposal fields	300 feet
Manure storage area, unplugged abandoned well, graves, sewage pumping station, building or yard used for livestock or poultry, privy, cesspool, or other contaminants that may drain into the soil	100 feet
Sanitary sewer lines, existing wells, pits sumps or holes, propane tanks, septic tanks, lakes or streams	50 feet
The right-of-way of federal, state, or county road	10 feet

b. Well owners:
   1. The owner of the well should control or own all the land within an isolation radius to the extent necessary to maintain minimum distances from potential sources of contamination after the well is constructed.
   2. The owner of the well should adopt a wellhead protection program and should encourage adjacent landowners to adopt voluntary restrictions on land use.
   3. Where legal authorities (such as a city council or county zoning authority) exist to provide ordinances, covenants, zoning, or other legally binding restrictions, the owner of the well should make every feasible effort to obtain legally binding restrictions to control or own all the land within an isolation radius to the extent necessary to maintain minimum distances from potential sources of contamination after the well is constructed.
c. Wells in unconsolidated formation may require greater isolation radii.
d. A well shall be located at least three feet horizontally from a building or any projection, except for a pump house.
e. No well shall be located within 15 feet of an overhead electric distribution line or 25 feet from an electric transmission line that is in excess of 50 kilovolts (kV) except for the underground electrical service line in the vicinity of an existing well or proposed well. Where there is a question of the voltage in an electric line, the 25-foot distance should be observed, or where less distance is required the utility company should be consulted for their recommendation for safe distances.

DRAFT

3.2.3.3. Other site location and security considerations

a. The well shall be so located that the site will meet the requirements for sanitary protection of water as well as protection against fire, flood, vandalism, terrorist acts, or other hazards.
b. All permanent casings that are part of the well shall terminate not less than four feet above the 100-year return frequency flood elevation or four feet above the highest historical flood elevation, whichever is higher, or protected to such elevations. Refer to 3.2.5. for more information on permanent casings.
c. The top of the upper terminal of the well should be readily accessible to operating and maintenance personnel at all times.
d. Wells elevated more than four feet above the ground shall be provided with work platforms of sufficient size to provide for safe access to the well head for maintenance and testing. Access to these platforms shall be by stairs or ships ladders.
e. For elevated wells, access shall not be by a trap door or open hole in the floor of a well house or well platform.
f. Well houses and enclosed platforms are considered raw water pumping stations and must be designed according to chapter 6 of this document.
g. The area around the well shall be graded to lead surface water drainage away from the well.

3.2.4. Testing and records

Geological data and the results of all pump tests shall be submitted in duplicate to the Department as a part of the submittal to obtain a Final Approval of Construction prior to placing the well in service. ~~State law~~Section 640.115~~(~~.1~~)~~, RSMo prohibits the use of any source of supply without a written permit of approval issued to the Continuing Operating Authority by the Department~~ and the~~. The Final Approval of Construction acts as that written permit for water sources.

Drillers of public water supply wells shall comply with the Missouri well construction rules (10 CSR 23) and shall submit certification and registration reports on forms provided by the Department within 60 days after drilling the well.

3.2.4.1. Yield and drawdown tests

Properly conducted pumping tests are necessary to determine the drawdown characteristics of newly drilled wells and also to determine the hydrologic characteristics of the aquifers from which the wells produce. Most standard aquifer evaluation methods require drawdown data collected from a well being pumped at a constant rate, or from a nearby observation well that is similar in depth and construction to the pumped well. Water discharged during a pumping test shall be directed to the nearest surface water body, storm sewer or ditch in a manner that prevents property damage and that prevents recirculation of discharged water into the aquifer being pumped.

DRAFT

3.2.4.1.1. For all wells in consolidated formations and unconsolidated formations greater than 300 feet deep, tests shall:

a. Be performed on every production well 8 inches in diameter or larger. Pumping tests are recommended but are not required for wells smaller in diameter than 8 inches;
b. Have the test methods clearly indicated in specifications;
c. Be a constant rate pumping test using the permanent pump designed for the well or a test pump that produces at least 100% of the designed production of the well with the pump test lasting at least 24 hours or be a constant rate pumping test using a pump able to produce at least 1.5 times the designed production of the well pumped with the pump test lasting no less than eight (8) hours if drawdown has stabilized for at least two hours. If the drawdown has not stabilized, the test shall continue for at least 24 hours;
d. Hold the pumping rate as constant as possible. If during the pumping test it is found that the pumping rate must be decreased more than 5% from the initial pumping rate to prevent the pump from breaking suction, then the pumping test shall be terminated and water level in the well allowed to recover to static water level before the full pumping test is repeated at a lowered pumping rate;
e. Measure the pumping rate using an accurate rate-of-flow meter, venturi meter, or using a calibrated orifice plate and manometer;
f. Measure the pumping rate and record the results every 10 minutes during the first hour of the pumping test and at 30 minute intervals thereafter;
g. Measure the water level in the well and in any observation wells as accurately as possible using an electronic water-level indicator, pressure transducer, airline and pressure gauge, or other device capable of accurately measuring depth-to-water in the well;
h. Measure the pumping water level during the test according to the following schedule:

    0 to 10 minutes – every minute
    10 to 50 minutes – every 5 minutes
    50 to 90 minutes – every 10 minutes
    90 to 180 minutes – every 30 minutes
    180 minutes to end of test – every 60 minutes

i. Collect recovery data when pumping is ended using the same schedule shown in subsection "h" above for a minimum of 6 hours or until water level recovers to pre-pumping static water level, whichever occurs first;
j. Provide the following pumping test data to the Water Resources Center within 14 days after completion of the pumping test:
    1. Well owner name;
    2. Well location (section-township-range numbers or latitude-longitude and county;
    3. Test pump capacity vs. head characteristics;
    4. Static water level;
    5. Depth of test or permanent pump setting;
    6. Pumping rate;

DRAFT

7. Time and pumping water level data collected according to the schedule in subsection "h" above; and

k. If desired, be a variable rate or step-test pumping test in addition to the required constant rate test.

3.2.4.1.2. For wells in unconsolidated formations less than 300 feet deep, yield and drawdown tests must produce the data necessary to determine the capacity of the well, aquifer characteristics, well efficiency, pumping rates, required distances between wells, pump installation depth settings and other factors that will be of value in the long term operation and maintenance of the well. These comprehensive tests require a minimum of one or two observation wells located 100 to 300 feet from the production well and at the same depth. When wells are drilled in new areas where characteristics and extent of the formation is unknown a 7-day pump test should be performed. Yield and drawdown tests shall:

a. Be done on every production well after construction but before placement of the permanent pump;
b. Be done using a pump with a capacity, at maximum anticipated drawdown, at least 1.5 times the quantity anticipated. Bailing, air blowing or air lifting shall not be used;
c. Be done using an accurate rate-of-flow meter, venturi meter, or using a calibrated orifice plate and manometer;
d. Provide for measurement of water levels using an electronic water-level indicator, pressure transducer, airline and pressure gauge, or other device capable of accurately measuring depth-to-water in the well;
e. Be done according to one of the following methods:
   1. The Variable Rate Method: This method is done by setting the pump at the lowest producing zone and pumping at 1.5 times the design rate of the well until the pump breaks suction. If the pump does not break suction for a period of 24-hours, the test shall be completed as a constant rate test. If the pump breaks suction, the rate shall be slowly decreased until the pumping level stabilizes approximately two feet above the pump intake for at least five minutes. Then the pumping rate shall be decreased 5% and the well pumped until the pumping level stabilizes for one hour. The pumping level shall be measured according to the following schedule:

      0 to 10 minutes - every minute;
      10 to 50 minutes - every 5 minutes;
      50 to 90 minutes - every 10 minutes;
      90 to 180 minutes - every 30 minutes;
      180 minutes to the end of the test - hourly.

      The discharge rate and drawdown thus established shall then be maintained for at least four hours. This pumping rate shall be considered the available production rate of the well and the observed pumping level during the test shall be considered the production pumping level. On completion of the pumping, recovery measurements shall be made

DRAFT

according to this same schedule until full recovery is reached or the level stabilizes for at least four hours. The static water level shall be established before the start of the pumping test;

2. The Constant Rate Method: This method is done by pumping the well at a discharge rate that is 1.5 times the design rate of the well with the test pump intake set at least five feet below the estimated lowest pumping level. Discharge shall be maintained within plus or minus 5% of this flow and shall be checked every ten minutes during the first hour of the test and at 30 minute intervals thereafter. The well shall be pumped for 24 hours or until the pumping level stabilizes for four hours. The static water level shall be established before the start of the pumping test. The pumping level shall be measured according to the following schedule:

   0 to 10 minutes - every minute;
   10 to 50 minutes - every 5 minutes;
   50 to 90 minutes - every 10 minutes;
   90 to 180 minutes - every 30 minutes;
   180 minutes to the end of the test - hourly.

   On completion of the pumping, recovery measurements shall be made according to this same schedule until full recovery is reached or the level stabilizes for at least four hours;

3. The Step Continuous Composite Method: This method is done by setting the pump at the lowest producing zone and pumping the well at rates ½, ¾, 1, and 1½ times its design capacity. Discharge shall be maintained within plus or minus 5% of the designated flow. For each pumping rate, discharge shall be checked at 10-minute intervals during the first hour of the test and 30-minute intervals thereafter. The static water level shall be established before the start of the pumping test. The pumping level shall be measured according to the following schedule:

   0 to 10 minutes – every minute
   10 to 50 minutes – every 5 minutes
   50 to 90 minutes – every 10 minutes
   90 to 180 minutes – every 30 minutes
   180 minutes to the end of the test – hourly.

   At each rate step, the well shall be pumped until the pumping level stabilizes for at least four hours or the pump breaks suction. Water level in the well shall be allowed to recover to static or stabilize for one hour after each pumping step. After each increase in pumping rate, the above measurement schedule shall be repeated. On completion of the pumping, recovery measurements shall be made according to this same schedule until full recovery is reached or the level stabilizes for at least four hours; or

Formatted: Indent: First line: 2.5"

DRAFT

4. Aborted Test: Whenever continuous pumping at a uniform rate is specified, failure of the pump operation for a period greater than one percent of the elapsed pumping time shall require suspension of the test until the water level in the pumped well has recovered to its original level. If the water level does not recover to its original level, pump testing can resume if three successive water level measurements spaced 20 minutes apart show no rise in level; and

f. Provide to the Department written records and graphic evaluations of all times, static water levels, pumping rates, pumping water levels, drawdown, and water recovery rates and levels measured.

3.2.4.2. Geological data

a. Geological data shall be determined from samples collected at five-foot intervals and at each pronounced change in formation.
b. For wells drilled in consolidated material, geological data shall be recorded and samples submitted to the Water Resources Center.
c. For wells drilled into unconsolidated material, a detailed driller's log of all wells and test holes associated with the public well shall be submitted in duplicate to the Public Drinking Water Branch.
d. Geological data shall be supplemented with information on drill hole diameters and depths, assembled order of size and length of casing, screens and liners; grouting depths; formations penetrated, water levels, and location of any blast charges.

3.2.5. Well construction

3.2.5.1. Minimum protected depths

Minimum protected depths of drilled wells shall provide watertight construction to such depth as may be required by the Department.

3.2.5.2. Drilling fluids and additives shall:

a. Not impart any toxic substances to the water or promote bacterial contamination;
b. Be acceptable to the Department;
c. Shall be capable of being removed from the drill hole and formation so that they do not retard the capacity of the well; and
d. Use water for preparation that will not contaminate the aquifer.

3.2.5.3. Surface or temporary casing

Surface or temporary casing used for construction shall be capable of withstanding the structural load imposed during its installation and removal. Surface or temporary casing shall be removed during or prior to grouting or it shall be grouted in place when set according to subparagraph 3.2.5.9. If the temporary or surface casing cannot be withdrawn, the driller must contact the design engineer to apply to the Department for approval of a method to finish the well. Any approved modifications to the well design due to unusual conditions

DRAFT

must be reflected in as-built drawings submitted to the Department. The engineer of record must submit as-built plans or plans of record of the well that shows all casings and the method with which they were sealed before the well can be approved as a public water supply source.

3.2.5.4. Permanent steel casing pipe shall:

a. Be new pipe meeting AWWA Standard A 100, or ASTM or API specifications for water well construction;
b. Have minimum weights and thickness indicated in Table 3;
c. Have additional thickness and weight if minimum thickness is not considered sufficient to assure the reasonable life expectancy of a well;
d. Be capable of withstanding forces to which it is subjected; and
e. Have full circumferential welds or threaded coupling joints.

3.2.5.5. Gravel pack material

a. Gravel pack materials shall:
    1. Be sized based on sieve analysis of the formation and copies of sieve analyses of the water bearing formation and of the proposed gravel pack shall be submitted to the Department for approval before installing the gravel pack;
    2. Be well-rounded particles, 95% siliceous material, that are smooth and uniform, free of foreign material, properly sized, washed and then disinfected immediately prior to or during placement;
    3. Have an average specific gravity of not less than 2.5;
    4. Have uniformity coefficient not to exceed 2.5;
    5. Have a gravel pack-to-formation sand ratio within a range of 6:1 to 4:1; and
    6. Be disinfected with a minimum solution of 200 mg/L chlorine, just before installation.

b. Gravel pack.
    1. Gravel pack shall be placed in one continuous operation.
    2. Gravel pack shall be placed in a manner that prevents segregation and gradation during placement.
    3. The annular space between the well screen and the hole shall be at least four inches to allow proper placement of gravel pack.
    4. Gravel refill pipes, when used, shall be Schedule 40 steel pipe incorporated within the pump foundation and terminated with screwed or welded caps at least 12 inches above the pump house floor.
    5. Gravel refill pipes located in the grouted annular opening shall be surrounded by a minimum of 1 ½ inches of grout.
    6. Gravel pack shall extend at least 2 ½ times the largest diameter of the well above the highest well screen.
    7. Protection from leakage of grout into the gravel pack or screen shall be provided. Studies have shown bentonite chips are not effective in protecting the gravel pack during grouting and should not be used.

DRAFT

Several feet of wash sand above the gravel pack is the recommended protection.

8. Permanent inner casing and outer casings shall meet requirements of subparagraph 3.2.5.4.

3.2.5.6. Packers or liner hangers

When used, packers shall be of material that will not impart taste, odor, toxic substance or bacterial contamination to the well water. Lead packers shall not be used. Packers or liner hangers must be capable of permanently and securely anchoring the liner in the bore hole. Well screens should be threaded or welded to the liner with the appropriate transition fitting. Telescoping wells and well casings shall be justified to and approved by the Department prior to construction, but in general should be avoided.

3.2.5.7. Screens shall:

a. Be constructed of stainless steel;
b. Have size of openings based on sieve analysis of formation and/or gravel pack materials. Copies of sieve analyses of the water bearing formation and of the proposed gravel pack shall be submitted to the Department for approval before the size of the screen is specified;
c. Have sufficient diameter and length to provide adequate specific capacity and a lower entrance velocity not to exceed 0.1 foot per second. A lower entrance velocity is recommended for water of significant incrustation potential;
d. Be installed so that the pumping water level remains above the screen under all operating conditions;
e. Where applicable, be designed and installed to permit removal or replacement without adversely affecting watertight construction of the well;
f. Be provided with a bottom plate or washdown bottom fitting of the same material as the screen; and
g. Be capable of resisting the column and tensile loads and the collapse pressures imposed during installation and well development and imposed by the external geological forces.

3.2.5.8. Plumbness and alignment requirements

a. Every well shall be tested for plumbness and alignment in accordance with the latest edition of AWWA Standard A-100.
b. The test method and allowable tolerance shall be clearly stated in the specifications.
c. If the well fails to meet these requirements, it may be accepted by the engineer, after consultation with the Department, if it does not interfere with the installation or operation of the pump or uniform placement of grout.

3.2.5.9. Grouting requirements

a. The Department of Natural Resources' regional office staff shall be given at least 48 hours advanced notice prior to start of grouting

DRAFT

b. All permanent well casings shall be surrounded by a minimum of 1½ inches of grout to the depth required by the Department. Grouting consists of filling the annular space between the permanent casing and the drill hole with impervious material. Grouting is necessary to protect water-bearing aquifers from contamination, to prevent unwanted water movement between aquifers and to preserve or protect the hydraulic response of the water producing zones.
c. Grout materials shall consist of Portland cement conforming to the latest AWWA Standard and water, with not more than six gallons of water per sack (94 pounds) of cement.
d. Additives may be used to increase fluidity of grout materials or to bridge voids, subject to prior approval by the Department.
e. Application.
    1. Sufficient annular opening shall be provided to permit a minimum of 1½ inches of grout around permanent casings, including couplings.
    2. Prior to grouting through creviced or fractured formations, bentonite or similar materials may be added to the annular opening, in the manner indicated for grouting.
    3. Before placing the grout, water or other drilling fluid shall be circulated in the annular space sufficient to clear obstructions.
    4. When grouting a well, one of the following methods shall be used:
        i. The Positive-Placement Interior Method (grout pipe): When the annular opening is less than three inches (the diameter of the drill hole is less than six inches larger than the casing diameter), grout shall be installed using the positive-placement interior method. This method involves pumping the grout through a pipe inside the well casing. Either an expandable or drillable plug shall be installed at the bottom of the well casing, and the grout pipe shall extend through this plug. Then grout shall be installed under pressure by means of a grout pump from the bottom of the annular opening upward in one continuous operation until the annular opening is filled. If the grout does not reach the surface, the driller shall wait at least 24 hours and then determine the elevation of the top of the grout. The appropriate Department of Natural Resources Regional Office shall be contacted for approval of the method used to complete grouting of the well by using the tremie method;

        ii. The Positive-Displacement Interior Method (Casing): When the annular opening is less than three inches (the diameter of the drill hole is less than 6-inches larger than the casing diameter), grout shall be installed using the positive-displacement interior method. The casing can be used as the grout conduit if the grout is pumped under pressure through the casing and up the annular space of the drill hole. A device shall be installed on the top of the casing that contains a drillable plug and a valved fitting below the plug and another valved fitting above the plug. Provisions for holding the plug in place before and during grouting shall be part of the grouting device. The device, plug and its

DRAFT

fittings shall be capable of withstanding the pressures generated by pumping the grout and water. Grout shall be pumped through the fitting below the plug until the volume of grout pumped exceeds the calculated volume of the annular space between the drill hole and the permanent casing by one fourth to one third. Then the lower fitting is shut off and water is pumped through the fitting above the plug to drive the plug to the bottom of the casing and the grout out of the bottom of the casing and into the annular space. If the grout does not reach the surface, the driller shall wait at least twenty-four (24) hours and then determine the elevation of the top of the grout. The appropriate Department of Natural Resources' Regional Office shall then be contacted for approval to complete grouting of the well by tremie method;

iii. The Positive-Placement Exterior Method: When the annular opening is three or more inches (the diameter of the drill hole is six or more inches larger than the casing diameter) and less than 300 feet in depth, grout may be placed by the positive-placement exterior method. This method requires pumping grout through a grout pipe installed in the annular opening. The maximum diameter of the grout pipe shall be at least 1½-inches smaller than the annular opening. The grout shall be placed to the bottom of the annular opening in one continuous operation until the annular opening is filled. The grout pipe shall be raised as the grout is placed but the discharge end of the grout pipe must be submerged in the placement grout at all times until grouting is complete. The grout pipe shall be maintained full, to the surface, at all times until grouting is complete. In case of interruption of grouting operations, the grout pipe must be removed from the drill hole and all air and water displaced from the grout pipe and the pipe flushed clean with clear water. After the grout pipe is cleaned, it may be placed in the drill hole and grouting resumed; or

iv. The Tremie Method: When the annular opening is four or more inches (the diameter of the drill hole is eight or more inches larger than the casing diameter) and less than 100 feet in depth, grout may be placed by gravity through a tremie pipe. The tremie pipe shall be installed to the bottom of the annular opening and the grout placed in one continuous operation until the annular opening is filled. The tremie pipe shall be raised as the grout is placed but the discharge end of the pipe must be submerged in the placement grout at all times until grouting is complete. The tremie pipe shall be maintained full, to the surface, at all times until grouting is complete. The maximum diameter of the tremie pipe shall be at least 1½-inches smaller than the annular opening.

5. After grouting is applied, work on the well shall be discontinued for at least 72 hours or until the grout has set properly.

DRAFT

DRAFT

f. Guides.
   1. The casing shall be provided with sufficient guides welded to the casing to center the casing in the drill hole, prevent displacement of the casing and still permit unobstructed flow and uniform thickness of grout.
   2. Centering spacer guides shall be provided at the bottom, at the top, and along the entire length of the casing at no more than 105 feet apart.

3.2.5.10. Upper terminal well construction

a. Permanent casing for all groundwater sources shall project at least 12 inches above the pump house or well platform floor or concrete apron surface and at least 18 inches above final ground surface.
b. For gravel wall wells and alluvial wells with less than 100 feet of permanent casing, in which grout has not been placed between the casings, all casings must extend at least 12 inches above the pump house or well platform floor or concrete apron surface and at least 18 inches above final ground surface.
c. For gravel wall wells that have inner and outer casings and wells where the surface casing is left in place using submersible pumps, the inner or production casing shall extend at least 6 inches above the outer casing.
d. The top of all well casings left in place at sites subject to flooding shall terminate at least four feet above the 100 year level or the highest known flood elevation, whichever is higher, or as the Department directs.
e. The upper terminal shall be constructed to prevent contamination from entering the well.
f. Where items such as water discharge piping, electric wiring, airlines, well vents and so forth protrude through the upper terminal, the connections to the upper terminal shall be mechanical or welded connections that are water tight.
g. All electrical installations shall be performed and maintained in accordance with nationally accepted electric codes. A permitted well installation contractor or pump installation contractor must perform all electric wiring which impacts the operation of the pump or pumping system. This includes wiring from the pump to the control boxes to the main power supply such as the breaker box in a well house.

3.2.5.11. Development

a. Practically all drilling methods cause compaction of unconsolidated materials in an annulus of variable thickness about a drill hole. In consolidated formations, similar compaction may occur in some poorly cemented rocks. In addition, fines are driven into the wall of the hole, drilling mud invasion may occur, and a mud cake may form on the wall of a hole. Proper well development breaks down the compacted drill hole wall, liquefies jelled mud, and draws it and fines into the well where they can be removed. Therefore, every well should be developed and the well construction specifications should include the well development methods to be used.
b. Every well drilled into an unconsolidated formation shall be developed by surging and bailing or surging and pumping. The surging shall be done using a single or double solid or valved surge block. Surging shall start at the

DRAFT

lowest screen in the well and proceed upwards. Pumping shall be done through the surge block by incorporating suction pipe in the fabrication of the block and shall be done simultaneously with surging. Other methods of development may be considered on a case by case basis and must be specifically approved by the Department before use.

c. The approval of the Department is required before doing any chemical washing of a well with mud dispersing agents, acids or other chemicals.
d. Development shall continue until the maximum specific capacity is obtained from the completed well.
e. The specifications shall include a detailed description of the well development methods to be used.
f. Before conducting or allowing any redevelopment or rehabilitation of a well, the owner shall contact the Department to determine if formal approval from the Department is required.

3.2.5.12. Capping requirements

a. A continuously welded metal plate or a threaded cap is the preferred method for capping a well. For gravel wall wells that have inner and outer casings and wells where the surface casing is left in place, a continuously welded metal plate shall be provided to cap the area between the two casings and provide a water tight seal. As an alternative, the space between the two casings may be sealed with at least one foot of non-shrink grout to the top of the outer or surface casing.
b. A properly fitted, firmly driven, solid wooden plug is the minimum acceptable method of temporarily capping a well until pumping equipment is installed.
c. At all times during the progress of work, the contractor shall provide protection to prevent tampering with the well or entrance of foreign materials.

3.2.5.13. Well plugging

All well plugging shall conform to appropriate standards developed by the Missouri Department of Natural Resources.

3.2.5.14. Special conditions for wells drilled into consolidated formations

The depth of the permanent casing will be determined from the examination of drill cuttings by the Water Resources Center.

3.2.5.15. Special conditions for wells drilled into unconsolidated formations

a. If clay or hard pan is encountered above the water bearing formation, the permanent casing and grout shall extend through such materials but shall not extend any less than 20 feet below the original ground elevation.
b. If a sand or gravel aquifer is overlaid only by permeable soils, the permanent casing and grout shall extend to at least 20 feet below the original or final ground elevation, whichever is lower.
c. If a temporary or a surface casing is used, it shall be completely withdrawn at the time the well is grouted. Failure to completely withdraw the temporary

DRAFT

casing or temporary surface casing in wells less than 300 feet deep is grounds for rejection of the well.

d. If a pitless unit is used for a well with less than 100 feet of casing, the outer casing shall not be cut off below the pitless unit. The discharge piping from the pitless unit shall extend through the outer casing and the annular space between the outer casing and the drill hole. The hole where the discharge pipe from the pitless unit extends through the outer casing shall be sealed water tight with a mechanical device or welding. Neat cement grout shall be placed in the annular space between the outer casing and the drill hole and around the discharge piping from the pitless unit to final ground level.
e. In wells drilled in flood plains where a berm is constructed to elevate the well site, the permanent outer casing shall extend at least 20 feet below the original ground surface and be grouted to the final ground elevation.

3.2.5.16. Special conditions for radial wells

A comprehensive geological, yield, and design study must be completed and a copy submitted to the Department for review prior to the development of plans and specifications. Given their unique and site specific design, the review and approval of horizontal collector wells and their ancillary items will be on a case-by-case basis. Where radial collectors extend beneath streams, rivers, or other water bodies, water from these lines shall be considered as groundwater under the direct influence of surface water unless demonstrated otherwise. The Department may declare other collector wells to be groundwater under the direct influence of surface water depending upon the depth of the collector lateral depths, proximity to water bodies, geological conditions, source water assessment monitoring and microparticulate sample analysis. Other non-conventional drilling techniques will be evaluated on a case-by-case basis.

a. Location
    1. Radial collectors shall be in areas and at depths approved by the Department.
    2. Except for radial collectors that extend beneath streams, rivers, or other water bodies, the area around the laterals shall be under the control of the public water system for a distance of three hundred feet beyond the laterals.
    3. The isolation standards of section 3.2.3.2 shall apply to the collector wells except that minimum separation distances shall apply to the furthest extended point of the well laterals.
b. Caissons
    1. The caisson shall be constructed of watertight reinforced Portland cement concrete with watertight joints.
    2. No additives shall be added or sealants applied to the caisson concrete that will impart a taste, odor, or harmful contaminant to the water. All water used in the construction of the collector shall be from a known bacteriologically safe and uncontaminated source.

DRAFT

3. An approved water stop shall be installed between each lift of the caisson walls. A final water stop or gasket shall be installed between the base of the pump house floor and the top of the caisson.
4. The top of the caisson shall be covered with a watertight floor and all openings in the floor shall be curbed and have overlapping covers or be otherwise protected against the entrance of foreign material.
5. The caisson shall be vented through a vent pipe installed through the pump house floor in accordance with the requirements of section 7.0.5 of this document.
6. The top of the casing shall be four (4) feet above the one hundred year flood or the flood of record whichever is greater.
7. The caisson walls shall be designed and reinforced to withstand the forces to which they will be subjected.
8. Locations and detailed drawings of all caisson construction joints and porthole assemblies shall be shown on the plans.
9. The bottom of the caisson shall be covered with reinforced concrete tied to the caisson walls.
10. Water level sensing equipment shall be installed in the caisson to monitor and record water levels.
11. The pump discharge piping shall not be placed through the caisson walls. In unique situations where this is not feasible, an exception request may be made and design information submitted to assure that a water tight seal will be obtained at the wall.
12. The well house or pumping station is considered a raw water pumping station and must be designed according to chapter 6 of this document. Well house floor drains and gutters shall not discharge into the caisson.
13. Well pumps, discharge piping, and appurtenances shall meet the requirements of section 3.2.6.

c. Radial collectors or laterals
   1. Provisions shall be made to assure that radial collectors are essentially horizontal.
   2. Laterals and their screens shall be constructed of stainless steel and meet all of the requirements for well screens in section 3.2.5.7.
   3. When gravel packing of lateral screens is required the gravel shall meet the requirements of section 3.2.5.5.
   4. A valve designed for continuous operation when submerged in water shall be installed on each lateral inside the caisson to allow each lateral to be shut off and the caisson to be dewatered.

3.2.6. Well pumps, discharge piping and appurtenances

3.2.6.1. Line shaft pumps

a. Wells equipped with line shaft pumps shall:
   1. Have the casing firmly connected to the pump structure or have the casing inserted into a recess extending at least one half inch into the pump base; and

2. Have the pump foundation and base designed to prevent water from coming into contact with the joint.

b. Avoid the use of oil lubrication. For existing wells with oil-lubricated pumps and new wells where oil lubrication cannot be avoided, only ~~food grade vegetable oil or mineral oil approved by the ANSI/NSF~~lubricants meeting ANSI/NSF standard 60-H1 for contact with potable water shall be used.

3.2.6.2. Submersible pumps

Where a submersible pump is used:

a. The top of the casing shall be effectively sealed against the entrance of water under all conditions, including the vibration or movement of conductors or cables;
b. The electric cable from the pump control panel to the well shall be installed in electric conduit and in a manner that it does not create a fall or tripping hazard;
c. The electrical cable shall be firmly attached to the riser pipe at 20- foot intervals or less; and
d. Electrical conductors shall meet the standards of the latest National Electric Code (NEC).

3.2.6.3. Discharge piping

All plumbing or water supply distribution from the well to the point of entry hookup shall be installed and maintained in accordance with nationally accepted plumbing codes or the local plumbing code having jurisdiction.

A permitted well installation contractor or pump installation contractor must perform all plumbing which impacts the distribution of water from its source to the point of entry inside or outside of the well structure, well-house, or building.

a. The discharge piping from the well head to the system shall:
   1. Not be piping that may impart contaminants into the water;
   2. Have pipe, fittings and joints that are structurally capable of withstanding all stresses and forces both instantaneous and long term applied, including the starting and stopping of the pump and the weight of pipe, fittings, valves, meters and appurtenances. Acceptable joints include bolted-flanged mechanical joint, threaded or fusion welded pipe;
   3. Not be solvent welded plastic if the pipe is greater than 2 inches in diameter;
   4. Where steel, iron or solvent welded plastic is used, be no less than schedule 80;
   5. Meet applicable AWWA and NSF standards;
   6. Where polyethylene plastic pipe is used, have a standard dimension ratio (SDR) no greater than 11;
   7. Be designed to minimize friction loss;
   8. Have the control valves and appurtenances located in a pump house and above the pump house floor when an above ground discharge is provided;
   9. Be protected against the entrance of contamination;

DRAFT

10. Be equipped with a check valve, a shutoff valve, a pressure gauge, and a totaling water meter;
11. Have valves upstream and downstream of the water meter to allow it to be easily removed for maintenance;
12. Be equipped with a smooth nosed sampling tap located at a point where positive pressure is maintained, but before any treatment chemicals are applied. The sample tap must be at least 18-inches above the floor to facilitate sample collection. Hose bib faucets shall not be used;
13. Be equipped with a sampling tap located downstream of chemical application to allow for accurate sampling for dose control;
14. Where applicable, be equipped with an air release and vacuum relief valve located upstream from the check valve; with exhaust and relief piping terminating in a down-turned position at least 18 inches above the floor and covered with an 18-mesh corrosion resistant screen;
15. Be valved to permit test pumping and control of each well;
16. Have all exposed piping, valves and appurtenances protected against physical damage and freezing;
17. Be properly anchored to prevent movement and be properly supported to prevent excessive bending forces;
18. Be protected against surge or water hammer; and
19. Be constructed so that it can be disconnected from the well or well pump to allow the well pump to be pulled for maintenance.

b. The discharge piping should be provided with a means of pumping to waste, but shall not be directly connected to a sewer.

c. For submersible, jet and line shaft pumps, the discharge, drop or column piping inside the well shall:
    1. Not be piping that may impart contaminants into the water;
    2. Be capable of supporting the weight of the pump, piping, water and appurtenances and of withstanding the thrust, torque and other reaction loads created during pumping. The actions of fatigue from repeated starting and stopping of the pump shall be considered when choosing a pipe and fittings. Preferred pipe is stainless steel or epoxy coated ductile iron, black iron or steel pipe that is equivalent to schedule 80 or greater;
    3. Where threaded piping and couplings are used, have threads and couplings designed to support the weight of the pump, piping, water and appurtenances and to withstand the thrust, torque and other reaction loads created during pumping;
    4. Where well plumbness is an issue, be fitted with guides or spacers to center the piping and well pump in the casing;
    5. Where plastic coated woven high tensile strength polyester hose is used, obtain a variance from the wellhead protection section prior to installation;
    6. Where plastic coated woven high tensile strength polyester hose is used, be specifically manufactured for use as submersible pump drop pipe. With this product soft start or variable speed pumps or torque arrestors shall be installed;

DRAFT

7. Where plastic coated woven high tensile strength polyester hose is used, have bands, brackets or connectors specifically designed to attach power cables and air lines to the hose;
8. Where plastic coated woven high tensile strength polyester hose is used, not exceed manufacturers' recommendations on maximum load capacity, working pressure and pump setting;
9. Where plastic pipe is used, meet ANSI/AWWA Standards and assure that pipes, joints, and connections will support the weight of the pump, piping, water and appurtenances and withstand the thrust, torque and other reaction loads created during pumping;
10. Where polyvinyl chloride pipe is used, be no less than Schedule 120 pipe;
11. Obtain a variance from the wellhead protection section before installing high density polyethylene plastic pipe;
12. Where high density polyethylene plastic pipe is used, have a standard dimension ratio (SDR) no greater than (9) nine;
13. Where high density polyethylene (HDPE) plastic pipe is used, be either one continuous length of pipe with no joints or be heat fusion jointed pipe done by a certified heat fusion technician. High density polyethylene pipe shall be chosen such that the long term (ten year) allowable tensile strength exceeds the weight of the water, pipe, pump, valves, fittings and other appurtenances without material creep; and
14. Not be corrugated flexible plastic pipe of any type.

3.2.6.4. Pitless well units

A pitless unit is a commercially manufactured assembly that extends the upper end of the well production casing to its upper terminal, prevents the entrance of contaminants into the well, conducts water from the well, prevents water from freezing and provides full access to the well for maintenance.

Pitless well adapters are generally not designed to support the weight of the drop pipe and pump like a factory pitless unit does. Use of pitless adapters can lead to premature failure of the component and possibly damage to the well itself. For small non-community water systems, pitless well adapters must be approved by the Department. The pitless adapter must be weld-on design and shop welded, not welded on in the field.

a. The Department must be contacted for approval of specific applications of pitless units.
b. Pitless units shall:
    1. Be shop fabricated from the point of connection with the well casing to the unit cap or cover;
    2. Be threaded or welded to the well casing;
    3. Be of watertight construction throughout;
    4. Be of materials and weight at least equivalent and compatible to the casing;
    5. Have field connection to the lateral discharge from the pitless unit of threaded, flanged or mechanical joint connection; and

DRAFT

6. Terminate at least 18 inches above final ground elevation, four feet above the 100 year flood level, or the highest known flood elevation whichever is higher.

c. The design of the pitless unit shall make provision for:
   1. Access to disinfect the well;
   2. Access for water level testing equipment or pneumatic lines with the necessary gauges;
   3. A properly constructed casing vent that meets the requirements of this document;
   4. Facilities to measure water levels in the well as specified in this document;
   5. A sanitary well cap at the upper terminal of the unit that is certified as water tight by the Water Systems Council to prevent the entrance of contamination;
   6. A contamination proof entrance connection for electrical cable;
   7. An inside diameter as great as that of the well casing; up to and including casing diameters of 12 inches in order to facilitate work and repair on the well, pump or well screen; and
   8. At least one check valve within the well casing or in compliance with requirements of the Department.

d. If the connection to the casing is to be welded in the field, shop assembled unit must be designed specifically for field welding to the casing. The only field welding permitted will be that needed to connect a pitless unit to the casing.

e. For wells drilled into consolidated formations and unconsolidated wells with more than 100 feet of permanent casing, the surface casing or outer casing may be cutoff below the pitless unit if the casing was grouted in place according to section 3.2.5.11. The annular space between the pitless unit and the drill hole shall be filled with cement grout or concrete to the ground surface. The portion of the discharge pipe within the drill hole shall be completely surrounded with cement grout or concrete.

3.2.6.5. Casing vent

Provisions shall be made for venting to the atmosphere the well casing that houses the well pump. The vent pipe shall be installed into the side of the casing and shall terminate in a downturned position at or above the top of the casing or pitless unit with the opening covered with an 18 mesh, corrosion resistant screen. The pipe connecting the casing to the vent shall be of adequate size to provide rapid venting of the casing but shall not be smaller than 1.5 inches in diameter.

3.2.6.6. Water level measurement

a. Provisions shall be made for periodic measurement of water levels in the completed wells.

b. Where pneumatic lines are used, water level measuring equipment and accessories shall be provided using corrosion resistant materials attached firmly to the drop pipe or pump column in such a manner as to prevent entrance of foreign materials.

DRAFT

3.2.6.7. Permanent observation wells

If they are to remain in service after completion of a water supply well, observation wells shall be constructed in accordance with the requirements for permanent wells and protected at the upper terminal to preclude entrance of foreign materials.

3.2.7. Liners

Liners are not casings and are not a substitute for properly casing and grouting a well. Liners are generally used for three purposes. First is to hold the well bore open below the casing point when caving or spalling rock is encountered or to control sand incursion into the well. These may be a combination of liner and screens to allow water flow from the lined portion of the bore hole. Second is to seal off portions of the bore hole below the casing point that are causing water quality issues. Third is to line the well casing to address casing damage, casing corrosion or iron bacteria growth on the casing.

3.2.7.1. General specifications and guidelines

a. The approval of the Department shall be obtained prior to the installation of any liner.
b. Steel liners shall be new and have an inside diameter no less than 4-inches and a minimum wall thickness no less than 0.188 inches. Liner sections shall be connected by welding or threads.
c. Plastic liners shall have an inside diameter no less than 4 inches and meet American Society for Testing and Materials (ASTM) standards concerning thermoplastic well casing and be composed of polyvinyl (PVC) or acrylonitrile-butadiene-styrene (ABS) materials formulated for well casing.
d. All liners significantly reduce the diameter of a well, which affects the size of the pump that can be installed in a well and the ability to install and remove the pump. At minimum, a camera+ study should be done to show that casing corrosion or damage is a problem before installing a liner.
e. All liners used to seal out potential groundwater contamination areas below the existing casing or to correct inadequate grouting seals of the casing annulus, and other problems arising concerning the contamination of subsurface water shall be steel. The liner shall be secured in the hole by an approved method and grouted with neat cement.
f. Packers or liner hangers shall be secured on plastic liners with screws (making sure they do not penetrate the liner) or other methods. On steel liners, packers or liner hangers shall be welded or mechanically attached so that they will not move during liner placement.

3.2.7.2. Method of installation

a. When liners are used only to hold open the well bore they may be placed in the well following normal industry installation procedures and shall be secured in the hole by approved packers, liner hangers or by swaging.

DRAFT

b. When liners are used only to hold open the well bore and water flow is desired from the area to be lined, the screen or liner must be specifically selected to withstand forces encountered during installation. Liners with torch cut slots done in the field should not be used because of their low area of opening, high corrosion at the ragged torch cut edges, slag, irregular uncontrolled openings, weakness particularly in collapsing strength, and a great tendency to clog. Slotted liners shall have uniform regular openings spaced to assure the structural integrity of the liner. Manufactured slotted liner, pipe-base screens or wire wrapped liner should be used. Liners and screens shall be secured in the hole by approved packers, liner hangers or by swaging.
c. Liners installed to prevent sand incursion shall be a combination of steel liners and screens. Liner spacers shall be installed at regular intervals between screen sections to ensure the structural integrity of the liner string. The method used to determine the size of the screen openings shall be submitted to the Department and approval obtained prior to installation. Liner and screens shall be joined by welding or threads.
d. Liners used to seal off portions of the bore hole below the casing point that are causing water quality issues must be sealed into place by the following procedures.
    1. The liner must have a packer secured near the bottom of the interval to be grouted. Another packer must be secured above the interval to be grouted. These packers must hold the grout in place. Grout must be placed between the first and second packer and should completely fill this interval as the liner is being installed into the casing. Care must be taken by the well installation contractor when selecting the type of grout used, keeping in mind the time of liner installation and grout set-up time. The liner shall be placed into the well casing being careful not to damage the packers or the liner. The liner may be grouted after the liner is set by pressure grouting through a tremie pipe. A minimum annulus of one inch (1") must be present to grout a liner.
    2. Alternate grouting procedures will be considered on a case-by-case basis. Written approval in advance by the division is required.
e. PVC and ABS liners installed to protect the casing from corrosion shall extend the entire length of the casing, be connected to the upper terminal of the casing with bolts or screws and have a packer installed on the bottom of the liner or be swaged to seal the bottom of the liner. Approval must be received in advance.

3.3. Well Completion.

Section 1.7 of this document provides requirements in order to obtain final construction approval. For wells, the size, thickness, upper and lower elevations and method of sealing of all casings or liners installed in the well shall be shown on the plans and adequately explained in plan notes. Detailed specifications on any packers or liners used shall be provided.

DRAFT

Table 3 – Steel Pipe

STEEL PIPE					
SIZE (inches)	DIAMETER (inches)		WALL THICKNESS (inches)	WEIGHT (pounds/feet)	
	Outside	Inside		Plain ends (calculated)	Threads & couplings (nominal)
6 I.D.	6.625	6.065	0.280	18.97	19.18
8	8.625	7.981	0.322	28.55	29.35
10	10.750	10.020	0.365	40.48	41.85
12	12.750	12.000	0.375	49.56	51.15
14 O.D.	14.000	13.250	0.375	54.57	57.00
16	16.000	15.250	0.375	62.58	
18	18.000	17.250	0.375	70.59	
20	20.000	19.250	0.375	78.60	
22	22.000	21.000	0.500	114.81	
24	24.000	23.000	0.500	125.49	
26	26.000	25.000	0.500	136.17	
28	28.000	27.000	0.500	146.85	
30	30.000	29.000	0.500	157.53	
32	32.000	31.000	0.500	168.21	
34	34.000	33.000	0.500	178.89	
36	36.000	35.000	0.500	189.57	

DRAFT

This page intentionally left blank

DRAFT

Chapter 4 - Treatment

4.0. General.

The design of treatment processes and devices shall depend on evaluation of the nature and quality of the particular water to be treated and the desired quality of the finished water. The design of the water treatment plant must consider the worst condition that may exist during the life of the facility.

4.0.1. Chief operators

Construction of new or alterations made to existing treatment facilities may affect operator certification requirements for chief operators and is regulated under 10 CSR 60-14.010.

4.1. Specialized Treatment.

All systems considering specialized treatment and chemical usage other than chlorine disinfection should review applicable sections of the "Minimum Design Standards for Missouri Community Water Systems" for necessary design elements.

Non-community systems requiring specialized treatment for surface water sources or Groundwater Under the Direct Influence of Surface Water will be reviewed on a case-by-case basis. System redundancy may not be required if operations can be shut down until service is restored.

~~All systems considering specialized treatment and chemical usage other than chlorine disinfection should review applicable sections of the "Minimum Design Standards and Guide for Missouri Community Water Systems" for necessary design elements.~~

4.2. Disinfection.

4.2.1. Regulatory considerations

Requirements for disinfection and disinfection residuals are found in 10 CSR 60-4.055 Disinfection Requirements and 10 CSR 60-4.025 Ground Water Rule. 10 CSR 60-4.055 also provides the Department the authority to require any public water system to disinfect and to provide the detention time deemed necessary by the Department. Disinfection by-products are regulated pursuant to 10 CSR 60-4.090 Maximum Contaminant Levels and Monitoring Requirements for Disinfection By-Products. 10 CSR 60-4.052 requires systems treating surface water or groundwater under the direct influence of surface water to notify the Department before making any changes to the point of disinfection, disinfectants used, disinfection process, or any other significant disinfection alteration and submit to the Department at least the following:

a. A completed disinfection profile and disinfection benchmark for *Giardia lamblia* and viruses as described in section (9) of the rule;
b. A description of the proposed change in disinfection practice; and

DRAFT

c. An analysis of how the proposed change will affect the current level of disinfection.

4.2.2. Use of disinfectants

Continuous disinfection is recommended for all primary water supplies.

a. Free chlorine using break point chlorination is the preferred method of primary disinfection.
b. Disinfection may be accomplished with liquid chlorine, calcium or sodium hypochlorite, or gaseous chlorine.
c. Other chemical disinfecting agents, such as ozone, will be considered, provided reliable application equipment is available and testing procedures for a residual are recognized in the latest edition of "Standard Methods for the Examination of Water and Wastewater."
d. Disinfection is required at all surface water supplies, ground water sources under the direct influence of surface water, and at any ground water supply of questionable sanitary quality or where treatment is provided that could potentially result in the water becoming microbiologically contaminated.
e. Due to the excessive contact times required, disinfection with chloramines is not recommended for primary disinfection to meet the CT requirements for systems treating surface water, ground water under the influence of surface water, or groundwater required to provide 4-log removal or inactivation of viruses. For maintaining a long lasting residual in distribution systems, chloramines have proven effective.
f. Systems using chloramines as the disinfectant residual entering the distribution system must add and mix the chlorine prior to the addition of ammonia.
g. When a chemical disinfectant is fed for taste and odor control, color removal or for purposes other than disinfection, the design shall meet all of the requirements necessary for feeding that chemical as a disinfectant. Sufficient contact time must be provided to assure that the intended reactions are complete and the desired water quality is achieved. Analysis equipment must be provided sufficient to control the treatment process and water quality.

4.2.3. Contact time and point of application

a. If a softener is used, the injection point for disinfection should be after the softener and before the pressure and retention tanks. See appendix E for disinfection diagrams for typical non-community installations.
b. Due consideration shall be given to the contact time of the disinfectant in water with relation to pH, ammonia, taste-producing substances, temperature, bacterial quality, disinfection by-products formation potential and other pertinent factors.
c. Disinfectant shall be applied at a point that will provide adequate contact time. All required disinfectant contact time should be provided after filtration.
d. All basins, tanks, containers and other facilities used for disinfection contact time shall be designed to minimize short-circuiting.
~~a.~~e. Specific consideration shall be given to influent and effluent arrangements, water level controls and internal baffling.

DRAFT

~~b.~~f. For surface water systems and ground water systems under the direct influence of surface water:

1. The disinfectant contact time must be determined by Tracer Studies as explained in Appendix B of the *Guidance Manual for Surface Water System Treatment Requirements.* The tracer study is required for a new treatment plant prior to receiving final approval from the Department for permission to operate;
2. The disinfection treatment must provide a sufficient CT (Disinfectant residual concentration multiplied by the contact time) value to ensure that the total treatment process achieves the required inactivation and/or removal of *Giardia lamblia* cysts *Cryptosporidium*, and viruses. The percentage of *Giardia lamblia* cyst, *Cryptosporidium* and virus removal by the disinfection process shall be determined by calculating the CT value and comparing the calculated CT value with the corresponding water characteristics on the CT tables in Appendix C of the *Guidance Manual for Surface Water System Treatment Requirements*;
3. If the system uses a primary disinfectant other than chlorine, the system must demonstrate to the Department that the treatment process can satisfactorily inactivate and/or provide the required log removal of *Giardia lamblia* cysts and viruses depending on the type of source water used.

~~c.~~g. For groundwater systems required to provide 4-log inactivation and/or removal of viruses, the disinfection treatment must provide a sufficient CT value to ensure that the total treatment process achieves the required inactivation and /or removal of viruses by comparing it to the values in the *Missouri Guidance Manual for Inactivation of Viruses in Groundwater*; and

~~d.~~h. For groundwater systems that add a chemical disinfectant, but are not required to provide 4-log virus inactivation and removal, disinfection facilities shall be designed to provide the residuals required in Section 4.2.4. Residual Disinfectant of this document

4.2.4. Residual disinfectant

a. Only free available chlorine or chloramines shall be used as the residual disinfectant in water entering the distribution system. The design shall provide for applying chlorine or chloramines prior to the filters with a residual maintained through the filters, except for granular activated carbon filters or contactors, to the water entering the distribution system, and at distant points in the water distribution system.
b. When chlorine is added to water containing naturally occurring ammonia, organo-chloramines are formed that are not disinfectants. When organo-chloramines are formed, breakpoint chlorination must be provided in the treatment process before adding an approved ammonia compound to convert the chlorine to chloramines. Where testing indicates that sufficient inorganic mono-chloramines are formed, breakpoint chlorination will not be required.
c. Disinfection facilities shall be designed to meet disinfectant demands and provide a minimum disinfectant residual in the water entering the distribution system of at least 1.0 mg/L of free available chlorine or 2.0 mg/L chloramines.

DRAFT

d. Disinfection facilities shall be adequately sized to meet disinfectant demands and provide a minimum free residual at distant points in a water distribution system of 0.5 mg/L or 1.0 mg/L chloramines. The equipment shall be of such design that it will operate accurately over the desired feeding range.

4.2.5. Testing equipment

a. Chlorine residual test equipment shall meet the requirements established in 10 CSR 60-5.010 and shall be capable of measuring residuals to the nearest 0.2 milligram per liter. Laboratory grade or hand held colorimeters or spectrophotometers shall be available for all facilities feeding chlorine.
b. All treatment facilities treating surface water, groundwater under the direct influence of surface water or ground water requiring 4-log inactivation removal of viruses and serving a population greater than 3,300 shall be equipped with continuous recording chlorine analyzers monitoring water entering the distribution system.
    1. Continuous chlorine analyzers shall be connected into an alarm system that will directly notify a water operator of low or high chlorine residuals.
    2. Continuous chlorine analyzers should be provided to monitor chlorine residuals entering disinfection contact units and be connected into an alarm system that will directly notify a water operator of low or high chlorine residuals.
    3. All treatment facilities required to meet specific CT requirements shall have equipment for testing pH and temperature meeting the requirements established in 10 CSR 60-5.010.

DRAFT

Chapter 5 - Chemical Application

5.0. General.

No chemicals shall be applied to treat drinking water unless specifically permitted by the Department. All chemicals used to treat drinking water shall be certified for drinking water use in accordance with ANSI/NSF Standard 60/61.

5.0.1. Plans and specifications

Non-transient non-community systems shall submit plans and specifications for review and approval, as provided for in Chapter 5 of this document. Transient non-community water systems shall submit technical information on the proposed treatment facilities for Department review, and may at the discretion of the Department be required to submit plans and specifications. Because specifications for chemical feeding equipment are generally performance specifications that give feed ranges and generic descriptions, detailed manufacturers' information on the equipment actually installed must be provided in order to obtain the required Final Construction Approval from the Department. Plans and specifications shall include:

a. Descriptions of feed equipment, including maximum and minimum feed ranges;
b. Location of feeders, piping layout and points of application;
c. Storage and handling facilities;
d. Specific chemicals to be used;
e. Descriptions of the feed system including all tanks with capacities, (with drains, overflows, and vents), feeders, transfer pumps, connecting piping, valves, points of application, backflow prevention devices, air gaps, secondary containment;
f. Operator safety equipment including eye washes and showers;
g. Operating and control procedures including proposed application rates and the results of chemical analyses, historic dosages, and the basis for choosing the proposed application rates, provided in the engineering report or as an appendix to the specifications; and
h. Description of testing equipment.

5.0.2. Chemical application

Chemicals shall be applied to the water at such points and by such means to:

a. Ensure maximum efficiency of treatment;
b. Ensure maximum safety to consumer;
c. Provide maximum safety to plant personnel;
d. Ensure satisfactory mixing of the chemicals with the water;
e. Provide maximum flexibility of operation through various points of application, when appropriate;
f. Prevent backflow or backsiphonage from chemical feed equipment or between multiple points of feed through common manifolds;
g. Provide complete spill containment where contents of solution tanks, bulk tanks or day tanks are in locations where spillage could drain into the water being

DRAFT

treated. Chemical feed or storage facilities shall not be located on top of pumping wells, transfer wells or clearwells unless specifically approved by the Department;

h. Prevent the accidental overfeed of chemicals by using sufficient controls to prevent accidental chemical application when water is not being produced; and
i. Minimize interference and undesirable reactions between chemicals.

5.0.3. General equipment design

General equipment design shall be such that:

a. Feeders will be able to supply, at all times, the necessary amounts of chemicals at an accurate rate throughout the range of feed;
b. Chemical contact materials and surfaces are resistant to the aggressiveness of the chemical fed and its solutions;
c. Chemical solutions injected into pipes are evenly dispersed throughout the water flow. Chemical solutions should be injected only in pipes that normally flow full of water;
d. Corrosive chemicals are introduced in such a manner as to minimize potential for corrosion and damage to water piping, treatment basins, and the water treatment facilities;
e. Chemicals that are incompatible are not fed, stored, or handled together;
f. All chemicals are conducted from the feeder to the point of application in separate conduits;
g. Chemical feeders are as near as practical to the feed point;
h. Chemical feeders and pumps operate at a setting no lower or higher than recommended by the manufacturer, or for dry feeders and diaphragm pumps no lower than 20% or higher than 80% of rated maximum, whichever is more restrictive. If two fully independent adjustment mechanisms such as pump pulse rate and stroke length are provided then the pump shall be designed to operate at no lower than 10% and no higher than 90% of the rated maximum. Peristaltic pumps with variable speed drives shall be designed to operate at a setting no lower or higher than recommended by the manufacturer. Intermittent operation of feeders to produce low feed rates is not recommended;
i. Normal chemical feed rate should be 50% of rated maximum;
j. Chemicals are fed by gravity where practical; and
k. Adequate space is provided around each chemical feeder to safely load, operate, clean, and maintain each feeder.

5.0.4. Chemical information

For each chemical, the information submitted shall include:

a. specifications for the chemical to be used;
b. purpose of the chemical;
c. proposed minimum, average and maximum dosages, solution strength or purity (as applicable, and specific gravity or bulk density; and
d. method for calculation of amount fed daily.

DRAFT

5.1. Facility Design.

5.1.1. Number of feeders

For systems that require continuous service and serve essential facilities, the following requirements apply:

a. Where chemical feed is necessary for continuous production of safe drinking water, such as chlorination, coagulation, or other essential processes:
   1. A minimum of two feeders shall be provided or a standby unit or a combination of units of sufficient capacity shall be available to replace the largest unit during shut downs.
   2. Where a booster pump or a transfer pump is required, duplicate equipment shall be provided and, when necessary, standby power.

b. A separate feeder shall be used for each chemical applied and should be used for each application point. Where one feeder is used to supply multiple application points, equipment shall be provided to accurately proportion and measure the amount of chemical fed at each application point. Only one solution pump should draw from a solution tank, day tank, barrel, or carboy.

c. Spare parts shall be available for all feeders to replace parts that are subject to wear and damage.

5.1.2. Control

a. Feeders may be manually or automatically controlled. Automatic controls shall be designed to allow override by manual controls and to allow adjustment of each control parameter.

b. When automatic controls are used, they shall include devices that prevent feeders from operating unless water is being produced. Devices shall include, but may not be limited to, linking chemical feed units to source water pump controls and flow switches, and flow pacers where appropriate.

c. When automatic controls are used, they shall include devices so that chemical feed rates shall be proportional to flow.

d. A means to measure all appropriate water flows must be provided in order to determine chemical feed rates.

e. Provision shall be made for measuring the volume or weight of chemicals used.

f. Weighing scales or equivalent method:
   1. For weighing all barrels, carboys, or gas cylinders smaller than one ton in size shall be low profile for ease of loading onto the scales. Otherwise, electric hoists, hoist tracks and properly sized clamps or other mechanized loading equipment shall be provided;
   2. Shall be provided for weighing all active gas cylinders at all plants utilizing chlorine gas, carbon dioxide, or ammonia gas;
   3. Shall be required for fluoride solution feed;
   4. Shall be provided for each active chemical solution day tank;
   5. Shall be provided for each solution or emulsion fed from carboys or barrels;
   6. Shall be provided to weigh chemicals when making batches of chemical feed solutions;
   7. Should be provided for volumetric dry chemical feeders;

DRAFT

8. Should be accurate to measure increments of 0.5% of load; and
9. Totaling gas meters shall be provided to measure all gas chemicals fed from rail cars or bulk storage containers.

5.1.3. Dry chemical feeders

Dry chemical feeders shall:

a. Measure chemicals volumetrically or gravimetrically;
b. Provide adequate solution water and agitation of the chemical at the point where it is placed into a solution or slurry;
c. Provide gravity feed of solution from each feeder where possible;
d. Completely enclose chemicals to prevent emission of dust to the operating room;
e. Be located and designed to prevent lifting injuries when loading sacks of chemical into the feeder. The current OSHA or National Institute of Occupational Safety and Health (NIOSH) guidance for manual lifting should be followed;
f. Provide adequate space around each feeder to allow chemical pallets to be moved close to the feeder and minimize the distance that chemical bags or containers must be carried;
g. Have chemical hoppers sized to minimize loading frequencies to no more than once per eight-hour shift;
h. Not have bulk storage facilities that feed directly into the feed chamber but have a chemical hopper on the feeder that is large enough to minimize chemical fluidization;
i. Have vibrators and anti-bridging and caking equipment that is separate from those provided on the bulk storage facilities;
j. Have feeder shells and housings constructed of stainless steel, aluminum or a nonmetallic substance that fully enclose the chemical being fed to minimize chemical dust created by the feeding process;
k. Have dissolving facilities or solution tanks that are sized according to the amount of chemical to be fed. Undersized or oversized dissolving facilities or solution tanks shall be avoided; and
l. Have rate-of-flow meters on the water lines servicing each chemical feeder to control the amount of solution water going to each dry feeder.

5.1.4. Chemical solution metering pumps

a. Positive displacement type solution feed pumps should be used to feed liquid chemicals, but should not be used to feed chemical slurries.
b. Bypass piping or other methods for accurately measuring the output of the chemical solution feeders shall be provided.
c. Graduated measuring chambers should be built into the feeder piping to allow the feeder output to be routinely checked.
d. Flow indicators should be installed on the discharge tubing.
e. Where off-gassing could cause the pump to lose prime, a bleed valve or other similar valve shall be provided for chemicals with tendencies to off-gas, such as hypochlorite solutions.
f. Pumps must be capable of operating at the required maximum rate against the maximum head conditions found at the point of injection.

DRAFT

g. Manual pressure release valves shall be provided at the discharge of each solution pump to allow for maintenance of solution lines.
h. Fittings and piping shall be provided to safely drain the solution lines before working on a pump.
i. Solution piping, tubing, pump heads, check valves, pump O-rings, fittings and other appurtenances shall be compatible with the chemical fed.

5.1.5. Chemical solution metering pumps - Siphon control

Chemical solution feeders shall be installed such that chemical solutions cannot be siphoned into the water supply. Chemical solution feeders shall:

a. Assure discharge at a point of positive pressure;
b. Provide vacuum relief;
c. Provide a suitable air gap; or
d. Provide diaphragm anti-siphon devices that are spring-loaded in the closed position on the discharge side of each metering pump head or other suitable means or combinations as necessary. When metering pump anti-siphon devices are provided, they should be selected to provide the backpressure required by the pump manufacturer. Peristaltic metering pumps do not require an anti-siphon device at the pump head but shall be equipped with a spring loaded check valve at the injector.

5.1.6. Backflow prevention

a. A Department approved reduced pressure principle backflow prevention assembly shall be provided on the service line supplying water to the water treatment plant according to the requirements of 10 CSR 60-11.010 and 10 CSR 23-3.020.
b. Backflow prevention shall be provided to ensure that the service water lines discharging to solution tanks shall be properly protected from backflow.
    1. Air gap separation shall be two times the pipe diameter of the water line serving any chemical solution tank.
    2. Atmospheric vacuum breakers conforming to the latest American Society of Sanitary Engineering (ASSE) standard 1001, or AWWA/ANSI standard C512, shall be applied to water lines serving chemical solution tanks where no shut off or control valves are located downstream of the vacuum breaker.
    3. Pressure vacuum breakers conforming to the latest ASSE standard 1020 or AWWA/ANSI standard C512 shall be applied to water lines serving chemical solution tanks where shut off or control valves are located downstream of the vacuum breaker.
c. No direct connection shall exist between any sewer and a drain or overflow from a feeder, solution chamber or tank. All drains shall end at least six inches or two pipe diameters, whichever is greater, above the overflow rim of a receiving sump, conduit or waste receptacle.

5.1.7. Chemical feed equipment location

Unless otherwise approved by the Department chemical feed equipment shall:

a. Be located in properly vented separate room(s) to reduce hazards and dust problems;

DRAFT

b. Be conveniently located near points of application to minimize length of feed lines;
c. Be readily accessible for servicing, repair and observing operation;
d. Be located so as to provide feeding by gravity;
e. Be located in a well-lighted area such that additional lighting is not required for normal operation and maintenance;
f. Be located in areas provided with the drains, sumps, finished water plumbing and the hose bibs and hoses necessary to fill solution tanks, clean up spills, and wash equipment;
g. Be located in areas that have floors and walls constructed of material that is suitable to the chemicals being stored and that is capable of being washed; and
h. Be located in areas with floor surfaces that are smooth and impervious, slip resistant, and well drained with three inches per ten feet minimum slope.

5.1.8. Service water supply

a. The quality of service water supplied to a treatment facility shall be compatible with the purposes for which it is used. Generally, only potable water should be used. Any proposal to use non-potable plant service water shall be submitted to and approved by the Department before construction. When potable water is not used, the hose bibs and all water lines carrying non-potable water shall be clearly labeled. No cross-connection between potable and non-potable water lines is allowed.
b. The amount of solution water used to operate the feeders in a plant should be kept to the minimum necessary. This is especially important in small water treatment facilities. When specifying chemical feeders, the amount of service water required to operate the feeder must be considered.
c. Service water supply shall be:
    1. Ample in supply and adequate in pressure;
    2. Provided with a totaling water meter to determine the amount of water used by the plant;
    3. Properly treated for hardness, when necessary; and
    4. Properly protected against backflow.

5.1.9. Storage of chemicals

a. Space shall be provided for:
    1. A minimum storage volume of 1½ truckloads where bulk purchase is by truck load lots;
    2. Convenient and efficient handling and rotation of chemicals;
    3. Dry storage conditions; and
    4. At least 30 days of chemical supply. Space requirements may be reduced on a case-by-case basis for systems that can shut down operation until services can be restored.
b. Chemical storage areas shall be provided with the drains, sumps, finished water plumbing and the hose bibs and hoses necessary to clean up spills and to wash equipment.

DRAFT

c. Chemical storage areas shall have floors and walls constructed of material that is suitable to the chemicals being stored and that is capable of being cleaned.
d. Chemical storage areas shall be well lighted and heated if liquid chemicals are stored.
e. Floor surfaces shall be smooth and impervious, slip resistant and well drained with three inches per ten feet minimum slope.
f. Vents from feeders, storage facilities, and equipment exhaust shall discharge to the outside atmosphere above grade and remote from air intakes.
g. Storage tanks and pipelines for liquid chemicals shall be specific to the chemicals and not for alternates.
h. Chemicals shall be stored in covered or unopened shipping containers, unless the chemical is transferred into an approved covered storage unit.
i. Chemical storage areas shall be provided with appropriate operator safety equipment as appropriate for the chemicals used, including but not limited to eye washes and showers.

5.1.10. Solution tanks

a. All solution tanks shall be constructed of material compatible with the chemical contained.
b. All solution tanks shall be housed in a heated building or the tank and its chemical lines and transfer pumps protected from freezing.
c. All solution tanks shall be clearly labeled with the name of the chemical stored.
d. All solution tanks shall be tightly covered. Large solution storage tanks with access openings shall have such openings curbed and fitted with overhanging covers or provided with bolted, gasketed covers.
e. Bulk solution storage tanks shall be located and secondary containment provided so that chemicals from equipment failure, spillage, overflow, or accidental drainage shall not enter the water in conduits, treatment, storage basins, or waters of the state. Secondary containment volumes shall be able to hold the volume of the largest storage tank. Anchors shall be provided to prevent tank flotation in containment areas. Sumps and other methods for removing chemical spilled in the containment area shall be provided. For exterior containment areas manually operated sump pumps shall be provided to routinely remove precipitation from the containment area. Piping shall be designed to minimize or contain chemical spills in the event of pipe ruptures.
f. All solution tanks shall be located and protective curbing or containment provided so that chemicals shall not enter the water in conduits, treatment, or storage basins from equipment failure, spillage, or accidental drainage.
g. Buried solution tanks shall not be used.
h. All solution tanks shall be provided with means to easily measure the liquid level in the tank or otherwise determines the amount of solution in the tank.
i. Overflow pipes, when provided, shall be turned downward, with the end screened and have a free fall discharge that is directed to minimize splashing and damage to the surrounding area.
j. Bulk solution tanks shall have an overflow that is located where noticeable and a receiving basin or drain capable of receiving accidental spills or overflows.

DRAFT

k. All solution tanks shall have vents and overflows sized to handle the chemical and air flow occurring during tank filling and discharging.
l. All solution tanks should be vented individually. Tanks containing incompatible chemicals shall not be vented in common.
m. All solution tanks shall be vented to the outside of any structure, above grade and remote from air intakes with vents constructed of material compatible with the chemical being vented and screened to prevent insects from building nests that may plug the vent.
n. All solution tanks shall have chemical fill lines located for ease in connecting to supply trucks and filling. Side-filling bulk liquid trucks are the most common means, so driveways and fill line locations should be designed for this type of truck. Lengthy fill lines should be avoided.
o. All solution tanks shall have chemical fill lines clearly labeled with the name of the chemical contained in the tank they serve. One set of labels should be located where the chemical supply trucks connect to the chemical fill lines.
p. Piping penetrating chemical solution tanks shall be tightly sealed to prevent the escape of chemical vapors.
q. All facilities shall have a means to assure continuity of chemical supply while servicing a liquid storage tank.
r. All solution tanks shall have means such as a valved drain, protected against backflow, to safely remove the chemical from each tank and allow access for servicing the tank.
s. Where appropriate, solution tanks shall have mixing systems that will adequately mix the solution to maintain chemical quality and effectiveness.
t. A means that is consistent with the nature of the chemical solution shall be provided in a solution tank to maintain a uniform strength of solution. Continuous agitation shall be provided to keep slurries in suspension.
u. Two solution tanks of adequate volume may be required for a chemical to assure continuity of supply in servicing a solution tank. When chemical solutions are mixed and fed in a batch process, solution tanks should be sized to minimize the filling frequency to no more than once per day.
v. Means shall be provided to measure the solution level in the tank.
w. Chemical solutions shall be kept covered. Large tanks with access openings shall have such openings curbed and fitted with tight overhanging covers.
x. Subsurface locations for solution tanks shall:
    1. Be free from sources of possible contamination; and
    2. Assure positive drainage for ground waters, accumulated water, chemical spills and overflows.
y. Overflow pipes, when provided, should:
    1. Be turned downward, with the end screened;
    2. Have a free fall discharge; and
    3. Be located where noticeable.
z. Acid storage tanks must be vented to the outside atmosphere, but not through vents in common with any other chemical.
aa. Each tank should be provided with a valved drain, protected against backflow in accordance with paragraphs 5.1.5. and 5.1.6. of this document.

DRAFT

bb. Solution tanks shall be located and protective curbing provided so that chemicals from equipment failure, spillage or accidental drainage shall not enter the water in conduits, treatment or storage basins.

5.1.11. Day tanks

a. Day tanks shall be provided where bulk storage of liquid chemical is provided.
b. Day tanks shall meet all the requirements of paragraph 5.1.10. of this document.
c. Day tanks should hold no more than a 48-hour average day supply.
d. Day tanks shall be scale mounted or provided with measuring capabilities of equivalent accuracy.
e. Pumps shall be provided for transfer of acids, caustic solutions or other hazardous chemicals from a carboy or drum into a day tank. For non-hazardous chemicals, a tip rack may be used to permit withdrawal into a bucket from a spigot. Where motor driven transfer pumps are provided, a liquid level limit switch and an overflow from the day tank must be provided. The overflow from the day tank must drain by gravity back into the bulk storage tank or to a receiving basin or drain capable of receiving accidental spills or overflows.
f. A means that is consistent with the nature of the chemical solution shall be provided to maintain uniform strength of solution in a day tank. Continuous agitation shall be provided to maintain chemical slurries in suspension.
g. Tanks shall be properly labeled to designate the chemical contained.
h. Motor driven transfer pumps from bulk storage tanks shall be constructed and specified to handle the specific chemical being pumped.
i. Motor driven transfer pumps from bulk storage tanks shall be sized so they can fill the day tank while chemical is fed at the maximum output of the chemical feeder(s) pulling from the day tank. Under these conditions, the transfer pump(s) should be capable of filling the day tank in 10 minutes, but no more than an hour. Where more than 10 minutes is required to fill a day tank, a liquid level limit switch that automatically shuts off the transfer pumps shall be provided.
j. Motor driven transfer pumps from bulk storage tanks shall be provided with discharge and suction valves located to allow the pump to be removed for maintenance without draining chemical from the lines to the bulk or day tank.
k. Containment should be provided for day tanks. Complete containment shall be provided where solution tanks or day tanks are in locations where the contents could drain to the water being treated.

5.1.12. Chemical feed lines

a. All chemical feed lines should be as short as possible in length of run and should be straight.
b. Chemical feed lines should not be buried. When chemical feed lines are buried, they shall be constructed of pressure piping designed to be buried. Lines one inch or smaller in diameter shall be installed in encasement conduits.
c. Injector/diffusers shall be used when pumping chemical solutions into pipes. The solution injector/diffuser must be compatible with the point of application to provide a rapid and thorough mix with all the water being treated. The center of a pipeline is the preferred application point. Retractable injectors shall have a

DRAFT

safety line provided between the injector valve and the injector nozzle to prevent the injector nozzle from being completely withdrawn and to prevent blowout.

d. Chemical solution lines:
   1. Should feed by gravity, where possible;
   2. Shall be of durable, corrosion resistant material that is compatible with the specific chemical being fed;
   3. Shall be easily accessible throughout the entire length;
   4. Shall be protected against freezing;
   5. Shall be adequately supported to prevent excessive movement and low areas where chemical will accumulate; and
   6. Shall be constructed to minimize plugging and to facilitate cleaning.
e. Chemical feed lines should slope upward from the chemical source to the feeder when conveying gases.
f. Chemical feed lines shall be designed consistent with scale forming or solids depositing properties of the water, chemical, solution, or mixture conveyed and shall be compatible with the chemical being fed.
g. Chemical feed lines should be color-coded, placarded, or otherwise clearly labeled with the name of the chemical contained. (See section 2.14. of this document).
h. Chemical feed lines shall be located so that plant operators do not have to routinely climb over them to get to other operating areas in the plant even if stiles or stairways are built over feed lines.
i. Chemical feed lines shall be located so that operators do not have to routinely walk under lines carrying strong corrosive, caustic or acid solutions.

5.1.13. Pumping of chemicals

When feeding of chemicals by gravity cannot be attained, pumping of chemicals to the different points of application may be considered. The chemical feed pumping system shall provide:

a. Standby pumping or eductor equipment;
b. Spare chemical feed line for each chemical;
c. Minimum velocity of 4 ft./sec through chemical feed lines;
d. For pigging chemical feed lines and baskets for catching pigs;
e. Water for flushing the chemical feed lines. The waterline must be protected from back siphonage;
f. Discharge and suction valves located to allow each pump or eductor to be removed for maintenance or a means to safely drain the lines prior to disconnection for repairs;
g. Pumps and eductors constructed from material that is compatible with the specific chemical being pumped and that are easy to access, disassemble, and maintain; and
h. Pumps that are located so that they are not tripping or fall hazards and so that they or their motors are not subject to damage by chemical spilled during routine loading and operation of solution tanks or feeders;

DRAFT

5.1.14. Handling

a. Carts, elevators, and other appropriate means shall be provided for lifting chemical containers to minimize excessive lifting by operators.
b. Provisions shall be made for disposing of empty bags, drums, or barrels by an approved procedure that will minimize exposure to dusts.
c. Provision shall be made for the proper transfer of dry chemicals from shipping containers to storage bins or hoppers, in such a way as to minimize dust. Control should be provided by use of:
    1. Vacuum pneumatic equipment or closed conveyor or elevator systems;
    2. Facilities for emptying shipping containers in special enclosures; or
    3. Exhaust fans and dust filters that put the hoppers or bins under negative pressure.
d. Provision shall be made for measuring quantities of chemicals used to prepare feed solutions.

5.2. Chemicals.

5.2.1. Shipping containers

Chemical shipping containers shall be fully labeled to include chemical name, purity, and concentration and supplier names and addresses.

5.2.2. Assay

Provisions should be required for assay of bulk chemicals delivered to assure the chemicals meet industry standards and/or design specifications.

5.2.3. Specifications

Chemicals shall meet the appropriate ANSI/AWWA standards and/or ANSI/NSF Standard 60 and/or be certified as being food grade.

5.3. Operator Safety.

5.3.1. Ventilation

a. Provisions shall be made for ventilation of all chemical feed and/or storage areas for dust and vapor control.
b. Special provisions shall be made for ventilation of chlorine, chlorine dioxide, anhydrous ammonia, ammonium hydroxide, sodium fluoride, sodium fluorosilicate, hexafluorosilicic acid, powdered activated carbon, sodium hypochlorite generation and ozone generation, feed and storage rooms.

5.3.2. Respiratory protection equipment

a. Respiratory protection equipment meeting the requirements of NIOSH shall be available for each chemical dust, vapor, or gas that may be encountered at a treatment plant. This respiratory protection equipment shall be stored at a convenient location, but not inside any room where the particular chemical is used or stored.

DRAFT

b. Self-contained breathing apparatus units shall use compressed air, have at least a 30 minute capacity, have full face masks, and should be compatible with units used by the fire department responsible for the plant.

5.3.3. Chemical protection and safety equipment

Appropriate operator safety equipment shall be provided as appropriate for the chemicals used, including but not limited to:

a. Chemical resistant gloves, aprons and face shields;
b. Respirators and dust masks; and
c. Eye washes and showers.

5.4. Specific Chemicals.

Chemical storage handling and feeding facilities for the chemicals specified here shall meet all of the appropriate general requirements of this document and the chemical-specific requirements specified in this chapter.

5.4.1. Chlorine gas

Contact between chlorine and many combustible substances such as gasoline and petroleum products, hydrocarbons, turpentine, alcohols, acetylene, hydrogen, ammonia, sulfur, reducing agents, and finely divided metals may cause fires and explosions. Contact between chlorine and arsenic, bismuth, boron, calcium, activated carbon, carbon disulfide, glycerol, hydrazine, iodine, methane, oxomonosilane, potassium, propylene, and silicon should be avoided. Chlorine reacts with moisture, steam, and water to create hydrochloric and hypochlorous acids. Therefore chlorine rooms shall be kept dry. Design of treatment facilities using gas chlorine must prevent the contact of the gas with incompatible substances and conditions.

Exposure to chlorine gas has caused death, lung congestion, and pulmonary edema, pneumonia, pleurisy, and bronchitis. Chronic exposure to low levels of chlorine gas or vapors from chlorine solutions can result in a dermatitis known as chloracne, tooth enamel corrosion, coughing, severe chest pain, sore throat, hemoptysis, and increased susceptibility to tuberculosis. Design of chlorine facilities shall include applicable safety measures and equipment to protect the facility operators.

a. Chlorine gas feed and storage shall be enclosed and separated from other operating areas. The chlorine room or building shall be:
    1. Constructed of fire and corrosion resistant material;
    2. Provided with a shatter resistant inspection window installed in an interior wall for chlorine rooms;
    3. Oriented so that the feeder settings and scale readings can be easily read from the inspection window and eliminate the need to frequently enter the room or building;
    4. Constructed in such a manner that all openings in a chlorine building or between the chlorine room and the remainder of the plant are sealed. These seals must be capable of withstanding the pressures expected from expanding chlorine gas. Areas sealed shall include, but not be limited to, electrical conduit, switches, lights and receptacles, ducts, wall, and ceiling and floor

DRAFT

joints. Floor drains are not recommended; however, where installed, they shall be plugged or sealed. All holes through the walls, ceiling and floor shall be sealed around where pipes conduits, wires, brackets, fixtures, etc., pass. All chlorine building or room doors shall be designed and fitted to contain chlorine gas leaks inside the room or building;

5. Provided with doors equipped with panic bars assuring ready means of exit and opening only to the building exterior;
6. Provided with doors that lock to prevent unauthorized access but do not need a key to exit the locked room using the panic bars;
7. Well-lighted with lights that are sealed so that they will continue working during a chlorine leak;
8. Sized to allow the safe maneuvering of gas cylinders using hand trucks or electric hoists; and
9. If free-standing, located down grade from the water treatment plant, or be provided with safety devices, such as scrubbers where down gradient location is not possible.

b. Full and empty cylinders of chlorine gas shall be:
   1. Housed in a completely enclosed chlorine storage building or room and protected from exposure to weather, extreme temperature changes and physical damage;
   2. Restrained in position to prevent upset or rolling, and shall not be stacked;
   3. Stored separate from incompatible material; and
   4. Stored in areas not in direct sunlight or exposed to excessive heat.

c. Where chlorine gas is used, the building or room shall be constructed to provide the following:
   1. Each room or building shall have a ventilating fan or fans with a capacity that provides one complete air change per minute when the room is occupied. The fans shall be constructed of chemical resistant materials and have chemical proof motors. Squirrel cage type fans located outside the chlorine room(s) may be approved if their fan housings and ducting are airtight and made of chlorine and corrosion resistant material;
   2. The ventilating fan(s) shall take suction near the floor as far as practical from the door and air inlet, with the point of discharge located remote from the entrance door to the chlorine room and so that exhausted chlorine gas will not enter any other parts of the water plant or other buildings, rooms or structures. Wall fans located in or beside the entrance doors to chlorine feed or storage room shall not be allowed;
   3. Air inlets shall be from the outside the building and be through louvers near the ceiling. These inlet louvers shall seal tightly. Motor operated louvers shall be provided with chlorine and corrosion resistant motor controls and electric connections;
   4. Separate switches for fans and lights shall be outside of the room and beside the entrance door and the interior inspection window. These switches shall be clearly labeled as to what they operate. A signal light indicating fan operation should be provided;

DRAFT

5. Vents from feeders and storage containers shall discharge to the outside atmosphere, above grade and be screened to prevent insects from nesting in and plugging the vents; and
6. Where located near residential or developed areas and deemed necessary by the Department, provision shall be made to chemically neutralize chlorine gas before discharge from the water treatment plant building into the environment. Such equipment shall be designed as part of the chlorine gas storage and feed areas to automatically engage in the event of any measured chlorine release. The equipment shall be sized to treat the entire contents of the largest storage container on site.

d. Heating equipment for chlorinator rooms shall be capable of maintaining a minimum temperature of 60°F, and the cylinders shall be protected from direct or excessive heat. Cylinders and gas lines should be maintained at the same temperature as the feed equipment. Equipment used to heat a chlorine storage or feed area shall be located a safe distance from, and shall not blow directly onto chlorine cylinders. Heating or air conditioning equipment provided shall be separate from central heating and air conditioning systems to prevent chlorine gas from entering the central system. Central heating or cooling ducts shall not terminate in or pass through a chlorine room.
e. Pressure chlorine feed lines shall not carry chlorine gas beyond the chlorinator room. Chlorine gas feed systems that are under a vacuum from the gas cylinder valve out are preferred.
f. Sufficient chlorine gas manifolds, cylinder valves, piping and other equipment shall be provided to connect enough chlorine storage containers to a feeder or feeders so as to not exceed the dependable continuous discharge rate of any chlorine gas container. Circulating fans shall not be used to prevent frosting of containers or freezing of feed lines or to increase discharge rates. The normal dependable continuous discharge rate from a 150-lb or 100-lb chlorine gas cylinder is 1¾ pounds per hour at 70 °F and a 35 PSIG backpressure.
g. Chlorine gas leak detection and control.
    1. A bottle of ammonium hydroxide, 56% ammonia solution, shall be available for chlorine leak detection.
    2. Where ton or larger containers are used, at least one atmospheric chlorine gas detector shall be provided in each chlorine storage and feed room. Atmospheric chlorine-gas detectors shall be continuous leak-detection equipment and shall be provided with both an audible alarm and a warning light. Continuous leak-detection equipment should be provided for systems using 150-lb or smaller cylinders.
    3. Where ton containers are used, a leak repair kit approved by the Chlorine Institute shall be provided.
    4. Valves should be provided that will automatically shut off all active chlorine-gas cylinders during a leak.
        i. These valves shall be mounted on the chlorine-gas cylinder valves and shall be capable of rapidly shutting off a cylinder even during a power failure.

DRAFT

ii. The valves and all other parts of the automatic system shall be constructed of or encased in chlorine compatible and corrosion resistant material.
iii. Operation of the valves shall be controlled by a signal from an atmospheric chlorine gas detector or control room.
iv. A manual shut-off switch shall be provided that also acts as a test switch to provide a full cycle test of the valve actuator.
v. Audible alarms and warning lights shall be provided indicating when a gas leak and valve shut down has occurred.
vi. Running lights shall be provided to indicate whether a valve is closed or open.

h. Chlorination equipment.
1. Type. Solution feed gas chlorinators or hypochlorite feeders of the positive displacement type must be provided for feeding the chlorine compounds, and ozonation equipment as specified for feeding ozone.
2. Capacity. The chlorinator capacity shall be such that a free chlorine residual of at least 2 mg/L can be maintained in the water after the required chlorine contact time even when maximum flow rate coincides with anticipated maximum chlorine demand. The equipment shall be of such design that it will operate accurately over the desired feeding range.
3. Standby equipment. Where chlorination is required for disinfection or other essential processes, standby equipment of sufficient capacity shall be available to replace the largest unit. In addition, spare parts shall be made available to replace parts subject to wear and breakage or a required replacement schedule.
4. Automatic switchover. Automatic switchover of chlorine cylinders should be provided, where necessary, to assure continuous disinfection.
5. Automatic proportioning. Automatic proportioning chlorinators will be required where the rate of flow or chlorine demand is not reasonably constant.
6. Eductor. Each eductor must be selected for the point of application with particular attention given to the quantity of chlorine to be added, the maximum injector water flow, the total discharge back pressure, the injector operating pressure, and the size of the chlorine solution line. Gauges for measuring water pressure and vacuum at the inlet and outlet of each eductor should be provided.
7. Injector/diffuser. Injectors shall be used when feeding chlorine into pipes. The chlorine solution injector/diffuser must be compatible with the point of application to provide a rapid and thorough mix with all the water being treated. The center of a pipeline is the preferred application point. Retractable injectors shall have a safety line provided between the injector valve and the injector nozzle to prevent the injector nozzle from being completely withdrawn and to prevent blowout.
8. Where chlorine is fed into a basin, the exit point of the chlorine feed shall be at least four feet below the water surface and shall be fed through a diffuser. This is to prevent off-gassing of chlorine and chlorine vapors as well as promote mixing.

i. Chlorinator piping.

DRAFT

1. Cross connection protection. The chlorinator water supply piping shall be designed to prevent contamination of the treated water supply by sources of questionable quality. At all facilities treating surface water, pre and post chlorination systems must be independent to prevent possible siphoning of partially treated water into the clearwell. The water supply to each eductor shall have a separate shut off valve. No master shut off valve will be allowed.
2. Pipe material. The pipes carrying elemental liquid or dry gaseous chlorine under pressure must be Schedule 80 seamless steel tubing or other materials recommended by the Chlorine Institute (never use PVC). Rubber, PVC, polyethylene, or other materials recommended by the Chlorine Institute must be used for chlorine solution piping and fittings. Nylon products are not acceptable for any part of the chlorine solution piping system.

5.4.2. Sodium hypochlorite

Strong sodium hypochlorite solutions are highly alkaline and powerful oxidizing agents that rapidly produce burns when in contact with the skin. Inhalation of mist or fumes can cause bronchial irritation, coughing, difficulty breathing, inflammation of the mouth, nausea, and in sever exposures, pulmonary edema.

When mixed with ammonia or ammonium compounds, explosive products may be formed. Sodium hypochlorite reacts vigorously with amines, ammonium salts, reducing agents, methanol, acids, and most organics and will liberate chlorine gas. Design of sodium hypochlorite storage and feed facilities shall assure separation from incompatible chemicals.

For strong sodium hypochlorite solutions (greater than 5.25%), problems that shall be considered during design are plugging of discharge piping due to scale formation, plugging of suction lines and pumps due to solution degradation and impurities in the solution, and the formation of gas (chlorine and oxygen) in the pumps and piping system.

a. Storage
   1. The sizing of storage tanks and the selection of the strength of the solution must be balanced with the fact that the solution degrades and loses strength over time. One of the compounds produced as sodium hypochlorite solutions degrade is sodium chlorate. While not presently regulated as a contaminant, design should include minimizing the amount of chlorates introduced into the water. A minimum of 30 days' supply shall be maintained to assure continuous disinfection, but the maximum storage life should be 60 to 90 days. More dilute sodium hypochlorite solutions degrade less quickly.
   2. Due to off-gassing, all storage containers and tanks shall be tightly sealed and properly vented out of all structures to the atmosphere.
   3. Because the rate of degradation increases with heat and sunlight, tanks shall be made of opaque polyethylene or coated fiberglass and should be housed to prevent extreme temperatures (less than 32 ºF or more than 80 ºF) and degradation of the hypochlorite solution.
   4. All sodium hypochlorite tanks, piping, pumps, fittings, etc. shall be compatible with the chemical. Metal shall not be used anywhere in a

DRAFT

hypochlorite system as corrosion will occur and the metals will permeate the hypochlorite solution. The presence of metals will contribute to the decomposition of the hypochlorite solutions and the development of chlorates. As much piping as possible should be rigid PVC or CPVC schedule 80. Nylon fittings shall not be used for hypochlorite.

b. Solution pumps
   1. For sodium hypochlorite piping PVC diaphragm valves are preferred but PVC line valves and PVC plug valves are acceptable. To reduce potential gas build-up or rupture, consideration should be given to using vented ball valves.
   2. A strainer shall be installed in each suction line or header to capture any impurities in the hypochlorite solution. Strainers shall be located and valved so that they are easily accessible for frequent cleaning. Suction should not be drawn off the bottom of a container.
   3. Pump(s) should be located as close to the supply container as possible to keep suction lines short. Avoid piping metering pumps with suction lift as this will increase the tendency to outgas.
   4. Gas bleed-off equipment shall be installed on the discharge piping as close to the pump as possible and at a high point.
   5. Appropriate safety equipment shall be provided to protect operators consisting of, but not limited to gloves, face masks or eye goggles, rubber aprons or suits and rubber boots.
   6. Injectors shall be made removable for regular cleaning where hard water is to be treated. Retractable injectors shall have a safety line provided between the injector valve and the injector nozzle to prevent the injector nozzle from being completely withdrawn and to prevent blowout. Standby injectors and Y-strainers are recommended.

5.4.3. Acids

a. Acids shall be kept in closed acid resistant shipping containers or storage units.
b. Acids shall not be handled in open vessels, but shall be pumped in undiluted form from original containers through a suitable piping to the point of treatment or to a tightly sealed, vented and covered day tank.
c. To reduce the hazard to the water plant, acids shall not be diluted. Instead, the metering pumps specified shall permit the use of undiluted acid for installations of any size.
d. With the exception of Fluorosilicic acid, acids shall not be stored in the same area as sodium chlorite and sodium chlorate solutions or in chlorine feed or storage rooms or in any area that may be affected by a chlorine gas leak or vapors from chlorine solutions or compounds.

5.4.4. Chlorine dioxide

Chlorine dioxide is a very unstable material even at room temperatures. Airborne concentrations greater than 10% will explode on impact when exposed to sparks or sunlight, or when heated rapidly to 100 ºC. Contact with the following materials may cause fires and explosions: carbon monoxide, dust, fluoroamines, fluoride, hydrocarbons (e.g., butadiene, ethane, ethylene, methane, and propane), hydrogen,

DRAFT

mercury, phosphorus, sulfur, platinum, or potassium hydroxide. Chlorine dioxide reacts with water or steam to form toxic and corrosive fumes of hydrochloric acid. Consequently, chlorine dioxide is generated on site and fed as dilute solutions. Chlorine dioxide is generated by mixing precisely measured amounts of chlorine, sodium chlorite or chlorate and sometimes hydrochloric or sulphuric acid. Storage of chlorine dioxide solution is not recommended.

Acute exposure to chlorine dioxide causes irritation of the eyes, nose, and throat; coughing, wheezing, shortness of breath, bronchitis, pulmonary edema, headaches, and vomiting. Chronic exposure to chlorine dioxide may cause chronic bronchitis and emphysema. Chlorine dioxide generation facilities must be housed in the same manner as chlorine gas facilities and the same type of operator safety equipment provided.

a. Sodium chlorite and sodium chlorate solutions and acids used to generate chlorine dioxide shall not be stored together or in chlorine feed or storage rooms or in any area that may be affected by a chlorine gas leak or by vapors from chlorine solutions or compounds.
b. Federal and state rules set plant and distribution system monitoring requirements for systems feeding chlorine dioxide. Chlorites are a regulated byproduct of the chlorine dioxide generation and feeding process that must be routinely monitored. Thus, the necessary approved analyses equipment, monitoring equipment, and laboratory facilities shall be provided to test for chlorine dioxide and chlorites.
c. Sodium chlorite and sodium chlorate storage.
    1. The Department, before the preparation of final plans and specifications, shall approve proposals for the storage and use of sodium chlorite and chlorate.
    2. Provision shall be made for proper storage and handling of sodium chlorite and chlorate to eliminate any danger of fire or explosion associated with their powerful oxidizing nature. Dry sodium chlorite and chlorate are a fire and explosion hazard and their use in this form is not recommended.
    3. Sodium chlorite or chlorate solutions shall be stored by themselves in a cool, dry, fireproof, separate room. Preferably, they should be stored in an outside building detached from the water treatment facility.
    4. Sodium chlorite or chlorate solutions shall be stored away from organic materials because many materials will catch fire and burn violently when in contact with sodium chlorite or chlorate.
    5. Storage shall be away from combustibles and acids.
    6. The storage structures shall be constructed of noncombustible materials.
    7. If the storage structure must be located in an area where a fire may occur, water shall be available to keep the sodium chlorite area cool enough to prevent heat-induced explosive decomposition of the chlorite.
    8. The storage structure shall be provided with a separate, non-combustible, corrosion-resistant ventilation system designed for mist or fumes.
    9. Full spill containment shall be provided. Furthermore, storage facilities shall not be located over plant treatment basins, pumping wells, transfer wells, or clearwells.
d. Sodium chlorite and sodium chlorate handling

DRAFT

1. The design shall provide the drains, sumps, finished water plumbing, hose bibs and hoses necessary to clean up spills and to wash equipment.
2. An emergency operations plan should be developed for the cleanup of any spillage.
3. Storage drums must be thoroughly flushed before recycling or disposal.
4. Protective safety equipment for the operators shall be provided that includes, but may not be limited to, chemical safety goggles, butyl rubber or neoprene gloves, self-contained breathing apparatus and waterproof outer clothing.

e. Sodium chlorite and sodium chlorate feeders.
1. Positive displacement feeders shall be provided for feeding the acids and sodium chlorite and chlorate solutions.
2. Methods for accurately metering or weighing the sodium chlorite and chlorate solutions shall be provided. Graduated measuring chambers should be built into the feeder piping to allow the feeder output to be routinely checked.
3. Tubing for conveying sodium chlorite or chlorine dioxide solutions shall be Type 1 PVC, polyethylene or materials recommended by the manufacturer.
4. Feed lines shall be installed in a manner to prevent formation of gas pockets and shall terminate at a point of positive pressure.
5. Check valves shall be provided to prevent the backflow of chlorine into sodium chlorite or chlorate lines.
6. Storage tanks inside buildings, day tanks and unsealed carboys or barrels shall be vented to the outside with a vent approved by the Department.
7. To reduce the hazard to the water plant operators, sodium chlorite and chlorate solutions and the required acids shall not be diluted. Instead, the metering pumps specified shall permit the use of undiluted solutions for installations of any size.

5.4.5. Chloramines

a. Anhydrous ammonia
1. Anhydrous ammonia storage and handling facilities shall be designed to meet OSHA Standard 1910.111.
2. With rising temperature, ammonia expands rapidly, increasing the internal pressure in vessels and pipes, etc. This shall be considered in the design and operation of ammonia systems.
3. Anhydrous ammonia feeding facilities shall be located in a separate enclosed room in the same manner as chlorine gas facilities, and the same type of operator safety equipment provided. See section 5.4.1. In addition, only explosion-proof electric fixtures shall be used in the room.
4. Anhydrous ammonia contact with chlorine or fluorine can create explosive compounds. Therefore, feeding and storage facility design shall consider methods of preventing ammonia or chlorine leaks from coming into contact with either chemical. Furthermore, fluoride-feeding facilities shall not be located in ammonia feeding or storage rooms.

b. Ammonia Solutions

Ammonia solutions are corrosive alkaline solutions that cause burns to any area of contact and are harmful if swallowed, inhaled or absorbed through skin.

DRAFT

1. Storage
   i. Ammonia solutions shall be kept in tightly closed containers stored in a separate cool, dry, ventilated room and kept from all forms of chlorine, strong acids, most common metals, strong oxidizing agents, aluminum, copper, brass, bronze, chlorite or chlorate solutions, and other incompatible chemicals.
   ii. Ammonia solutions shall be protected from direct sunlight.
   iii. The storage room shall be provided with a separate, corrosion-resistant ventilation system to capture mist or fumes and vent them to the outside.
   iv. All warnings and precautions listed for the product in ammonia solution containers should be observed for full and empty containers.
2. Ammonia Solution Handling
   i. Ammonia solutions are very toxic to aquatic life and spills may not be drained into some sanitary sewer systems. Therefore, full spill containment shall be provided.
   ii. Absorbent pads and the drains, sumps, finished water plumbing, hose bibs, and hoses necessary to clean up spills and to wash equipment shall be provided.
   iii. An emergency plan of operation should be developed for the cleanup of any spillage.
   iv. Provide protective safety equipment for water plant personnel that include, but are not limited to chemical safety goggles, butyl rubber or neoprene gloves, self-contained breathing apparatus and water proof outer clothing.
   v. To reduce the hazard to the water plant personnel, ammonia solutions shall not be diluted. Instead, solution with the correct strength for the amount fed shall be purchased, or the metering pump specified shall permit the use of undiluted solution for water plants of any size.
3. Ammonia Solution Feeders
   i. Positive displacement feeders or rotameters shall be provided for feeding the ammonia solutions.
   ii. Methods for accurately metering or weighing the ammonia solutions shall be provided. Graduated measuring chambers should be built into the feeder piping to allow the feeder output to be routinely checked.
   iii. Tubing for conveying ammonia solutions shall be Type 1 PVC, polyethylene or materials recommended by the manufacturer.
   iv. Feed lines shall be installed in a manner to prevent formation of gas pockets and shall terminate at a point of positive pressure.
   v. Storage tanks and unsealed carboys or barrels shall be vented to the outside with a vent approved by the Department.

c. Ammonium Sulfate Solutions

Ammonium sulfate causes irritation to skin, eyes, and respiratory tract and may be harmful if swallowed, but does not present the safety issues of other ammonia solutions. It can be treated as an ordinary chemical solution.

DRAFT

5.4.~~9. Powdered activated carbon~~

~~a. Powdered activated carbon feed and storage facilities.~~

~~1. Powdered activated carbon shall be handled as a potentially combustible material.~~

~~2. Powdered activated carbon shall be stored in a building or compartment as nearly fireproof as possible.~~

~~3. A separate room shall be provided for carbon feed installations and other chemicals should not be stored in the same compartment.~~

~~4. Carbon feeder rooms shall be equipped with explosion-proof electrical outlets, lights and motors.~~

~~5. If possible, the feeder drive controls should be located outside the carbon room.~~

~~6. The carbon feed room should be large enough to house the carbon feeder and to store all of the powdered carbon present at the plan safely. Thus, the door to the carbon feed and storage room must be large enough to accommodate a loaded pallet of carbon.~~

~~7. Access to the carbon room should be from outside the plant to keep carbon from being tracked throughout the water plant.~~

~~b. Powdered activated carbon feeding.~~

~~1. Powdered activated carbon should be added as early as possible in the treatment process to provide maximum contact time.~~

~~2. Flexibility to allow the addition of carbon at several points is required.~~

~~3. Powdered activated carbon should not be applied near the point of chlorine application.~~

~~4. The effectiveness of powdered activated carbon depends upon the carbon particles physically contacting the chemicals to be adsorbed. Therefore, flash mixing shall be provided to ensure an even dispersion of the carbon in the water.~~

~~5. The carbon can be added as pre-mixed slurry or by a dry-feed machine as long as the carbon is properly wetted. However, solution pipe plugging is a constant problem when pumping carbon slurries. Carbon feed design must consider ways to mediate this problem by using wetting cones and eductors, dual headed slurry pumps, etc.~~

~~6. Continuous agitation or suspension equipment is necessary to keep the carbon from depositing in the slurry storage tank.~~

~~7. Provision shall be made for adequate dust control by providing exhaust fans and dust filters.~~

~~8. Provision shall be made for adding from 0.1 mg/L to at least 50 mg/L at the maximum design flow of the treatment facilities.~~

~~c. Powdered activated carbon handling.~~

~~1. Operators shall be provided with respiratory protection that meets OSHA regulation 29 CFR 1910.134 for coal dust. More information on the selection and use of respirators can be obtained from the latest issue of NIOSH Respirator Decision Logic.~~

DRAFT

2. Additional personal protective equipment to protect skin and eyes should be provided for dry feeder operations and shall be provided for operators that batch make carbon slurries.

5.4.106. Fluoridation

Commercial sodium fluoride, sodium fluorosilicate and fluorosilicic acid shall conform to the appropriate American Water Works Association (AWWA) standards (B-701, B-702, and B-703) to ensure that the drinking water will be safe and potable. The Department must approve other fluoride compounds that may be available. The Department must approve the proposed method of fluoride application before preparation of final plans and specifications.

a. Fluoride compound storage. Fluoride chemicals should be isolated from other chemicals to prevent contamination. Compounds shall be stored in covered or unopened shipping containers and should be stored inside a building. Adequate ventilation in storage area is necessary. Bags, fiber drums, and steel drums should be stored on pallets. Carboys, day tanks, or inside bulk storage tanks containing fluorosilicic acid must be completely sealed and vented to the atmosphere at a point outside any building. Bulk storage tanks for fluorosilicic acid must be provided with secondary containment and shall not be located over plant treatment basins, pumping wells, transfer wells or clearwells. Unsealed storage units for hydrofluosilicic acid shall be vented to the atmosphere at a point outside any building.

b. Chemical feed equipment and methods. Fluoride feed equipment shall meet the following requirements:
   1. The fluoride feed system must be installed so that it cannot operate unless water is being produced (interlocked). For example, the metering pump must be wired electrically in series with the main well pump or the service pump. If a gravity flow situation exits, a flow switch shall be installed.
   2. When the fluoridation system is connected electrically to a well or service pump, it must be made physically impossible to plug the fluoride metering pump into any continuously active ("hot") electrical outlet. The pump shall be plugged only into the circuit containing the interlock protection.
   3. A secondary flow-based control device (e.g., a flow switch or a pressure switch) should be provided as back-up protection.
   4. The fluoride injection point should be located where all the water to be treated passes. However, fluoride should not be injected at sites where substantial losses of fluoride can occur. Fluoride compounds shall not be added before lime-soda softening or ion exchange softening.
   5. The fluoride injection point in a water line should be located in the lower one third of the pipe, and the end of the injection line should extend into the pipe approximately one-third of the diameter of the pipe.
   6. A corporation-stop valve should be used at the fluoride injection point when injecting fluoride under pressure. To protect water plant operators, a safety chain shall be installed in the assembly at the fluoride injection point if a corporation stop valve assembly is used.

DRAFT

7. ~~Two diaphragm-type anti-siphon devices must be installed in the fluoride feed line when a metering pump is used. These anti-siphon devices should have a diaphragm that is spring-loaded in the closed position. One device should be located at the fluoride injection point and one device shall be located at the metering pump head on the discharge side. Metering pump anti-siphon devices should be selected to provide the backpressure required by the pump manufacturer.~~
8. ~~Operation of a fluoridation system without a functional anti-siphon device can lead to overfeed that exceeds 4 mg/L. Therefore, maintenance manuals, tools and repair parts must be provided to the system operators so that all anti-siphon devices can be dismantled and visually inspected at least once a year. Schedules of repairs or replacements should be based on the manufacture's recommendations. Equipment for semiannual vacuum testing of all anti-siphon devices should be provided.~~
9. ~~Fluoride metering pumps should be located on a shelf not more than 4 feet (1.2 m) higher than the lowest normal level of liquid in the carboy, day tank, or solution container. A flooded suction line is not recommended in water fluoridation.~~
10. ~~For greatest accuracy, metering pumps should be sized to feed fluoride near the midpoint of their range. Pumps should always operate between 30%-70% of capacity. Metering pumps that do not meet these size specifications should not be installed. Oversized metering pumps should not be used because serious overfeeds (i.e., overfeed that exceeds 4 mg/L) can occur if they are set too high. Conversely, undersized metering pumps can cause erratic fluoride levels.~~
11. ~~Priming switches on the metering pumps shall be spring-loaded to prevent pumps from being started erroneously with switches in the priming position.~~
12. ~~Flow meter-paced systems should not be installed unless the rate of water flow past the point of fluoride injection varies by more than 20%.~~
13. ~~A master meter on the water service line must be provided so that calculations can be made to confirm that the proper amounts of fluoride solution are being fed.~~
14. ~~Fluoride solutions shall not be injected in a point of negative pressure.~~
15. ~~The fluoride feed line(s) should be either color-coded, when practical, or clearly identified by some other means. Color-coding helps prevent possible errors when taking samples or performing maintenance. The pipes for all fluoride feed lines should be painted light blue with red bands. The word "fluoride" and the direction of the flow should be printed on the pipe or, for small piping, on the wall beside the pipe.~~
16. ~~The dilution water pipe shall end at least two pipe diameters above the highest water level in the solution tank, or an adequate backflow prevention device must be provided. All hose connections within reach of the fluoride feed equipment should be provided with a hose-bib vacuum breaker.~~
17. ~~Cross-connection controls must be provided that conforms to state regulations in 10 CSR 60-11.010.~~

DRAFT

18. Hose bibs and water supply piping to supply potable water for cleanup of spills shall be provided in both the chemical feed and storage areas. The number of hose bibs and their location depend upon the size of the areas served.

c. Sodium Fluoride Saturator systems. Sodium fluoride systems are not recommended but may be considered on a case-by-case basis with the Department's written approval.

d. Fluorosilicic Acid Systems.
   1. To reduce the hazard to the water plant operator, fluorosilicic acid (hydrofluosilicic acid) must not be diluted. Instead, the metering pump specified shall permit the use of undiluted fluorosilicic acid for water plants of any size.
   2. No more than a 30-hour supply of fluorosilicic acid should be connected at any time to the suction side of the chemical feed pump. All systems using bulk storage tanks must have a day tank.
   3. Day tanks or direct acid-feed carboys/drums shall be located on scales, pressure transducers or equivalent devices so that daily weights can be measured and recorded. Volumetric measurements, such as marking the side of the day tank, are not adequate for monitoring acid feed systems.
   4. Full spill containment shall be provided for bulk storage tanks. Furthermore, bulk storage facilities cannot be located over plant treatment basins, pumping wells, transfer wells or clearwells.
   5. Bulk storage tanks inside buildings; day tanks and unsealed carboys shall be vented to the outside with a vent approved by the Department.

e. Dry Fluoride feed systems.
   1. Dry feeders (both volumetric and gravimetric) must be provided with a solution tank.
   2. Solution tanks shall be sized according to Water Fluoridation: A Manual for Engineers and Technicians published by the Centers for Disease Control and Prevention.
   3. A mechanical mixer should be used in every solution tank of a dry feeder when sodium fluorosilicate is used.
   4. Scales must be provided for weighing the amount of chemicals used in the dry feeder.

f. Testing equipment.
   1. Surface water plants should use the ion electrode method of fluoride analysis.
   2. A magnetic stirrer should be used in conjunction with the ion electrode method of fluoride analysis.
   3. The colorimetric method (SPADNS) of fluoride analysis can be used where no interference occurs or where the interferences are consistent (e.g., from iron, chloride, phosphate, sulfate, or color).

g. Secondary controls. Secondary control systems for fluoride chemical feed devices may be required by the Department as a means of reducing the possibility for overfeed.

h. Protective equipment. The use of personal protective equipment (PPE) is required when fluoride compounds are handled or when maintenance on fluoridation

DRAFT

~~equipment is performed. The employer should develop a written program regarding the use of PPE and make this a part of the operation plan for the system. Safety procedures should be routinely followed and enforced.~~

1. ~~Fluorosilicic acid.~~

   ~~At a minimum, the operator shall be provided with the following personal protective equipment for normal maintenance and operation of fluorosilicic acid facilities:~~

   i. ~~Gauntlet neoprene gloves with cuffs, which should be a minimum length of 12 inches (30.5 cm);~~
   ii. ~~Full face shield and splash-proof safety goggles;~~
   iii. ~~Heavy-duty, acid-proof neoprene apron or acid-proof clothing and shoes; and~~
   iv. ~~A safety shower and an eye wash station must be available and easily accessible.~~

   ~~Specific procedures for handling leaks in bulk storage tanks must be included in the required, system emergency operations plan.~~

2. ~~Sodium fluoride or sodium fluorosilicate. An eye wash station should be available and easily accessible. The operator shall be provided with the following personal protective equipment:~~
   i. ~~A National Institute for Occupational Safety and Health (NIOSH)/Mine Safety and Health Administration (MSHA) approved, N-series particulate respirator (i.e., chemical mask) with a soft rubber face-to-mask seal and replaceable cartridges (49-51);~~
   ii. ~~Splash-proof safety goggles;~~
   iii. ~~Gauntlet neoprene gloves, which should be a minimum length of 12 inches (30.5 cm); and~~
   iv. ~~Heavy-duty, acid-proof neoprene apron.~~

3. ~~Dust control.~~
   i. ~~Provision must be made to minimize fluoride dust when transferring dry fluoride compounds from shipping containers to storage bins or hoppers. Feeder hoppers shall be provided with an exhaust fan and dust filter that place the hopper under a negative pressure. Air exhausted from the fluoride handling equipment shall discharge through a dust filter to the outside atmosphere of the building.~~
   ii. ~~Provision shall be made for disposing of empty bags, drums, or barrels in a manner that will minimize exposure to fluoride dusts. A floor drain should be provided to facilitate the hosing of floors.~~

DRAFT

Chapter 6 - Minimum Design Standards for Pumping Facilities

6.0. General.

This section applies to public water systems that construct or make major alterations to pumping facilities and well houses.

6.0.1. National Standards

a. Unless otherwise noted in this document, design and construction of the following components shall be in accordance with the latest edition of the American Water Works Association (AWWA) Standards:
   1. AWWA Standard E101 for Vertical Turbine Pumps-Line Shaft and Submersible Types;
   2. AWWA Standard C500 for Metal Seated Gate Valves for Water Supply Service;
   3. AWWA Standard C509 for Resilient Seated Gate Valves for Water Supply Service;
   4. AWWA Standard C504 for Rubber Seated Butterfly Valves;
   5. AWWA Standard C507 for Ball Valves 6-inch through 48-inch;
   6. AWWA Standard C508 for Swing-Check Valves for Water Works Service 2-inch through 24-inch;
   7. AWWA Standard C115 for Flanged Ductile Iron Pipe with Ductile-Iron or Gray-Iron Threaded Flanges;
   8. AWWA Standard C200 for Steel Water Pipe 6-inch and Larger;
   9. AWWA Standard C206 for Field Welding of Steel Water Pipe;
   10. AWWA Standard C207 for Steel Pipe Flanges for Water Works Services Sizes 4-inch through 144-inch; and
   11. AWWA Standard C220 for Stainless-Steel Pipe 4-inch and Larger.

b. Centrifugal pumps.
   Unless otherwise noted in this document, centrifugal pumps shall be designed and constructed in accordance with the latest (ANSI-HI) American National Standards Institute and Hydraulic Institute Standards, except that the following requirements shall be observed:
   1. Larger stuffing boxes for mechanical seals shall be used;
   2. Solid Shafts shall be used for close coupled, end suction, horizontal centrifugal pumps to eliminate bending motion caused by the impeller; and
   3. Close coupled, end suction, horizontal centrifugal pumps should not be used if the L^3/D^4 ratio is greater than 60 where L is shaft length and D is shaft diameter.

c. Electrical equipment.
   Unless otherwise noted in this document, design and construction of all electrical equipment and all wiring associated with pumping facilities shall be in accordance with the latest NFPA 70 National Electric Code published by the National Fire Protection Association and shall be in accordance with any

DRAFT

applicable local electric code or portion of a local electric code that is more stringent than the National Electric Code. Electric equipment should be provided to allow easy connection of permanent or portable electric generator to operate the pumps. Electric motors shall at least meet the standards of the National Electrical manufacturers Association (NEMA) for premium motors. In addition, pump motors shall meet applicable requirements of the Federal Energy Policy and Conservation Act and rules of the United States Department of Energy on efficiency requirements of electric motors.

d. Buildings.
Pumping facilities should be housed in above ground, fully enclosed, climate controlled buildings with adequate exterior access for pump maintenance. Unless otherwise noted in this document, design and construction of buildings that house pumping facilities should be such that the structure will have a NFPA Type I construction rating as outlined in the latest NFPA Standards on Types of Building Construction published by the National Fire Protection Association. Interior walls of pumping rooms, buildings, or chambers shall be of water resistant material to allow damage free cleaning.

e. Ladders, Stairways, Handrails and other Safety equipment.
Unless otherwise noted in this document, design and construction of all ladders, stairways, handrails, safety cages, and other safety appurtenances for pumping facilities shall conform to the latest federal Occupation Safety and Health Administration (OSHA) Regulation 29 CFR, Part 1910, Subpart D, Occupational Safety and Health Standards, General Industry Standards. These safety appurtenances shall also conform to any applicable local ordinances, codes, standards or portion thereof that are more stringent than the OSHA standards.

f. Other Pumping Equipment.
Pumps, valves, pipe, and appurtenances other than those listed above in the national standards may be used in pumping facilities provided the engineer demonstrates that the components have sufficient strength, durability, and functionality. Some specialty components not listed in the national standards may be more appropriate, such as stainless steel, nickel-copper alloy or low-zinc bronze bolts for flanged piping to reduce corrosion or globe valves when throttling is needed. In these cases, the most appropriate component is recommended. Solvent welded polyvinylchloride (PVC) pipe shall not be used.

6.0.2. Other general standards

a. Pumping facilities shall be designed to maintain the sanitary quality of the pumped water. No pumping station shall be subject to flooding. Subsurface pits or pump rooms should be avoided.
b. Electrical efficiency of the pumping system should be considered in pump design and overall electrical usage and electrical cost as affected by electrical peak demand considerations should be minimized.
c. Preliminary pump curves and system curves including suction pressures shall be provided as part of a complete hydraulic analysis showing conditions for all possible combinations of pumps in operation. This information shall be provided as part of the plans and specification submittal.

DRAFT

d. As part of the final as-built plans or certification submitted by the engineer for pumping facilities projects, the Department shall be provided with manufacturer, model number, impeller size, horsepower, voltage and amperage requirements for both unsteady state (startup) and steady state conditions, rotational speed(s), electrical phase requirements, pump curve showing both head versus flow characteristics and efficiency characteristics, and life expectancy with proper maintenance for each pump and motor. The Department shall also be provided with final cost of the project, excluding land and easement.

6.1. Location and Protection.

a. The pumping station shall be so located that the proposed site will meet the requirements for sanitary protection of water quality, hydraulics of the system, and protection against fire, flood, vandalism, or other hazards.
b. Site protection shall include the following:
   1. For finished water pumping stations, the pump operating floor of the pumping station shall be elevated to a minimum of four feet above the 100-year return frequency flood elevation or four feet above the highest historical flood elevation, whichever is higher, or protected to such elevations;
   2. Finished water suction wells, pumping wells, wet wells, or finished water storage facilities associated with a pumping facility shall not be located in a flood prone area;
   3. Raw water pumping facilities that must be located in areas that flood shall have necessary motor and electrical controls and non-submersible pumps and motors located a minimum of four feet above the 100-year return frequency flood elevation or four feet above the highest historical flood elevation, whichever is higher;
   4. Raw water pumping facilities that must be located in areas that flood sh~~a~~oul~~l~~d have electric service designed to provide continued operation of the pumping facilities during floods;
   5. The pumping station shall be readily accessible to operating and maintenance personnel at all times unless the overall system design allows the station to be out of service for the period of inaccessibility; and
   6. The area around the pumping station shall be graded to route surface water drainage away from the station.
c. Pumping stations shall be designed to prevent vandalism, and entrance by unauthorized personnel or animals. See section 2.5. for specific requirements.
d. The size of the selected site, the location of the pump building, and the electrical service and panels shall be designed to accommodate the use of portable or permanent power generators and their accessories.
e. Pumping stations shall be provided with all-weather driveways and parking areas to allow off-road parking and access for equipment during maintenance.

6.2. Pumping Stations.

6.2.1. Finished and raw water pumping stations

a. Both finished and raw water pumping stations shall be designed and constructed to include adequate space for the installation of additional units that may be

needed during the next 20 years and adequate space around each unit to allow safe servicing.

b. Buildings should be of durable construction with a life expectancy with proper maintenance of 100 or more years. This shall include structural design to withstand all 100- year return frequency weather related events except a direct hit by a tornado.
c. Buildings shall have outward opening doors.
d. Floors shall be at least six inches above finished grade.
e. Underground structures shall be water-proofed.
f. All floors shall be drained to prevent pooling, conduct condensation away and allow for easy cleaning.
g. Water from pump gland drainage shall be discharged through a suitable outlet without discharging to the floor.
h. Fully buried pumping stations should be avoided. Buried pumping stations not built for continuous occupancy could be considered as confined spaces with required entry procedures.
i. All accessways to buried pumping stations shall be fitted with a locking device, and shall be framed at least six inches, but no more than one foot above the final ground surface. In addition, accessways shall be fitted with a solid, water-tight, hinged cover. The accessway cover shall be self-supporting when open and shall overlap the framed opening and extend down around the frame at least two inches.
j. Accessways to the buried pumping stations shall be sufficiently large enough to allow easy removal of pumps and other equipment in the station. For large pumping stations, additional accessways may be required over each pump.
k. Power lifting equipment shall be specified as part of the required pumping station equipment. Lifting equipment may be either stand-alone or truck mounted and shall be sized to remove the heaviest piece of equipment in the buried pumping station.
l. All other openings and penetrations (vents, piping, power service, control wires, etc.) into the buried pumping stations shall be water tight.
m. Ventilation shall be provided for buried pumping stations. The intake and/or exhaust vents shall extend at least eighteen inches above the final ground surface, and vents shall either be capped or downturned to prevent water entrance and shall be screened to prevent insects from entering the station.
n. Switches to operate the interior station lights and the ventilation fan in buried pumping stations shall be located at the entrance to the pumping station where they can be turned on prior to entrance.
o. Access ladders to buried pumping stations shall be equipped with extendable ladder safety posts to facilitate safe access to the ladder.
p. For buried pumping stations, stairs or ships ladder with safety rails should be provided instead of straight fixed ladders.
q. A power ventilation system shall be provided for buried pumping stations and sized to properly vent the space.
r. A floor sump and sump pump or drain to daylight shall be provided in buried pumping stations with the discharge extended above ground and discharging away

DRAFT

from the pumping station. The floor shall slope to the sump and shall not allow ponding of water.

s. Manufactured buried metal pumping stations shall be equipped with exterior cathodic protection and the location of the sacrificial anode packs shall be clearly marked.
t. The operating floors of manufactured metal pumping stations shall be covered with non-slip material to prevent falls.
u. Buildings and structures for raw water pumping facilities that must be located in areas that flood shall be designed to withstand flood forces and effects with minimal damage.
v. Buildings and structures for raw water pumping facilities that must be located in areas that flood shall be protected from flood waters or have walls designed to prevent flooding.
w. Raw water pumping facilities that must be located in areas that flood, and require continuous service shall be capable of being remotely operated and monitored. If buried hard wired connections are used for remote operation, testing shall be performed to ensure connections are water proof.
x. Raw water pumping facilities that must be located in areas that flood shall be provided with sumps and pumps to allow the automatic safe removal of water from the facility during a flood. Sumps shall be sized to allow the installation of pumps large enough to protect the facility during a flood.
y. Raw water pumping facilities that must be located in areas that flood ~~and~~, must be accessed by boat, and require continuous service shall have permanent stairs, ladders, landings, alternative access ways, and any other provisions necessary for safe access and egress during a flood.
z. Hose bibs to provide water for cleaning shall be provided.
aa. Smooth nose sample tap constructed of brass, bronze, or stainless steel shall be located on each pump discharge to allow bacterial sampling.

6.2.2. Suction wells

Suction wells shall be designed and constructed to protect the quality of water pumped including the following:

a. Suction wells shall be water tight;
b. Suction wells shall have floors sloped to permit removal of water and solids;
c. Suction wells shall be covered or otherwise protected against contamination; and
d. Suction wells shall be designed to prevent vortexing, which may include baffles, adjustable false walls, or other appurtenances.

6.2.3. Motor and pump installation and removal

Pump stations shall be designed and constructed to allow the safe, efficient removal and reinstallation of each motor and pump including:

a. Crane ways, hoist beams with hoists, eyebolts, or other facilities shall be provided for lifting, removing, and reinstalling each equipment item that weighs 50 or more pounds; and

DRAFT

b. The buildings shall be equipped with openings in floors, roofs, or walls to allow safe, efficient removal and reinstallation of equipment. These openings shall be properly protected from weather or unauthorized entry when not in use.

6.2.4. Stairways and Ladders

Pump stations shall be equipped with permanent stairways and ladders to allow access to every part of the building that must be entered for operation or maintenance of the equipment. Stairways shall be provided to areas that must be routinely entered.

6.2.5. Heating, Ventilation and Lighting

Pump stations shall be equipped with heating, ventilation, and lighting as is necessary for the safe, efficient operation and maintenance of the equipment, and when the facility is expected to be staffed for 2 hours or more, the reasonable comfort of the operator including the following:

a. Heating equipment shall be installed in facilities that are staffed less than one hour per day to maintain a temperature of 40º F or higher during the 100-year return frequency coldest temperature;
b. Heating equipment shall be installed in facilities that are staffed one hour per day or more to maintain a temperature of 65º F or higher during the 100-year return frequency coldest temperature;
c. Ventilation (and air conditioning if needed) shall be provided that achieves the following:
    1. Inside temperature and outside temperature shall not have a differential of more than 10º F during the 100-year return frequency hottest temperature;
    2. Inside temperature shall be maintained lower than the highest allowable ambient operating temperature for each pump motor, and electrical component;
    3. All rooms, compartments, pits, and enclosures below ground level shall be power vented to provide at least six air changes per hour when staffed. Switches to operate the ventilation equipment and lights shall be located at the entrance to the below ground facility and shall be placed to allow these to be operated without entering the facility; and
    4. All rooms, compartments, pits, and enclosures that are subject to accumulation of hydrogen sulfide (H_2S), chlorine gas (Cl_2), radon (Rn), or other hazardous substances shall have air changes sufficient to maintain levels of each hazardous substance below ”Threshold Limit Values of Airborne Contaminants for 1970” of the American Conference of Governmental Industrial Hygienists, but in no case less than six air changes per hour; and
d. Lighting shall be provided so that every part of the facility is well lit and all instrument readings and all maintenance and operation can be performed without additional lighting. Light fixtures shall be located where bulbs can be readily changed. Exterior lighting shall be provided to deter vandalism and to allow safe access and maintenance work after dark.

DRAFT

6.2.6. Dehumidification

Dehumidification should be provided if ventilation is not adequate to prevent condensation that is causing a safety hazard or is damaging equipment or controls.

6.2.7. Staffed pumping stations

Pumping stations that are staffed for one hour or more per day shall be equipped with potable water, lavatory, and toilet facilities. Plumbing must be installed so as to prevent contamination of the public water supply and wastes shall be discharged in accordance with regulations in 10 CSR 20.

6.3. Pumps.

6.3.1. Sizing

a. Pumps shall be sized as part of the overall public water system design to meet maximum day pumping demand, diurnal peak flow, instantaneous peak flow, fire flow (if provided), and minimal flows.
b. Submittals for approval shall include a system curve covering the entire flow and head range at which each pump is expected to operate.
c. Pump specifications shall state the discharge flow and head, horsepower and efficiency of each pump.
d. If continuous service is necessary, at least two pumping units shall be provided and the pumps shall be capable of meeting maximum day pumping demand with the largest capacity pump out of service.
e. When pumping units are required to operate over a broad flow range, a sufficient number of single speed pumps with different flow capabilities or variable speed pumps shall be provided. If single speed pumps are provided, they shall be sized to provide the entire range of flow and to avoid excessively short run cycles.
f. Where more than one single speed pump will operate simultaneously, system curves showing head and flow conditions of each combination of pumps shall be submitted. The effect of simultaneous operation on all pumps involved shall be explained in the submittals for approval.
g. Frequently used single speed pumps should be provided in pairs.
h. Any submittal for variable speed or frequency pumps shall state whether the pumps will operate to provide a constant pressure, a constant flow or will operate to allow both flow and pressure to vary.
i. Any submittal for variable speed or frequency pumps shall include system curves covering the entire flow range and shall specify the base horsepower and base speed required. Pump specifications shall designate the minimum, maximum, and normal frequency, head and capacity points at which the pump is expected to operate. Pump specifications shall designate the pump efficiency and horsepower range at which the pump is expected to operate.
j. All specifications for variable frequency drives shall require fault protection for power circuit components and harmonic distortion protection to protect the drive and power system ahead of the drive.

DRAFT

6.3.2. Single tower storage

Non-community water systems that require continuous service and have pressure zones served by a single tower shall have pumps able to meet all water demands and maintain adequate main pressures while the tower is out of service for maintenance. Such systems shall be equipped with pressure relief devices to allow for continued service while the tower is out of service.

6.3.3. Pumping unit design and construction

a. Pumps shall have ample capacity to supply the peak demand without pump motor overload.
b. Pumps should be designed to operate in the head/flow range of maximum efficiency.
c. Prime movers driving pumps shall be able to operate against the maximum head.
d. Specifications should include spare parts and tools needed for routine maintenance and repair of pumps and motors.
e. Control equipment shall have the proper heater and overload protection for the air temperature extremes expected.
f. Pumps that generate 30 PSIG or more surge pressure during start-up or shut-down or which generate surges that result in pressure below 20 PSIG anywhere in the distribution system shall be equipped with water hammer/surge protection or prevention devices and these devices shall be designed to reduce surge pressure to less than 30 PSIG and maintain distribution pressure of 35 PSIG or more. Variable speed drives and soft-start/soft-stop controls are an acceptable alternative to mechanical surge control devices.
g. Where large elevation differences exist, a mechanical surge control device may be necessary as a safety measure during power failure.

6.3.4. Suction Lift

a. Suction lift should be avoided if possible.
b. Suction lift shall be within allowable limits of the pump and preferably less than 14 feet.
c. Provisions shall be made for priming pumps providing suction lift. Prime water must not be of lesser sanitary quality than the water being pumped. Means shall be provided to prevent back siphonage. When an air operated ejector is used, the screened intake shall draw clean air from a point at least ten feet above the ground or other possible contamination unless the air is filtered by an apparatus approved by the Department. Vacuum priming may be used.

6.4. Additional Requirements for Booster Pumps.

In addition to meeting the pump requirements in section 6.3. of this document, booster pumps shall meet the criteria in this section.

6.4.1. Booster pumping station

a. Each booster pumping station shall contain not less than two pumps with capabilities such that peak demand and fire flow, if provided, can be satisfied with the largest pump out of service.

DRAFT

b. The booster station shall also include equipment such as multiple sets of pumps with different capacities, variable speed pumps, hydropneumatic tanks, or other equipment to meet the full range of flow needed if elevated storage is not provided to stabilize pressure on the portion of the distribution system served.
c. Booster stations with fewer than 50 connections, and utilizing single speed pumps in areas not provided with elevated storage shall provide hydropneumatic storage sized to meet the requirements of Section 7.4. to prevent pressure surges and water hammer in the distribution system.
d. Booster stations utilizing single speed pumps in areas that are not provided with elevated storage that serve more than 50 connections shall not use hydropneumatic storage as the only storage.
e. Booster stations serving areas not provided with elevated storage and that serve more than 100 connections shall have permanent power generation installed to serve the pumping station. The power generation facilities shall be sized to allow normal operation of the booster pumps, their controls and all pumping station accessories and appurtenances.
f. Booster stations serving areas not provided with elevated storage shall be designed to maintain a minimum main pressure of 35 PSIG throughout the area served.

6.4.2. Booster pumps drawing from storage tanks

a. Booster pumps drawing directly from storage tanks shall be located and controlled to achieve the following:
    1. Pumps will not produce negative pressure in the suction line;
    2. All pumps shall be valved and piped so that each pump can be isolated and removed without draining the storage facilities and with the remaining pumps in service;
    3. Automatic or remote control devices shall have a range between start and cutoff pressure which will prevent excessive cycling; and
    4. System design shall allow storage facilities serving pumping stations to be removed from service for maintenance while maintaining normal service to the area served.
b. Suction lines shall be protected from freezing, and should be buried.

6.4.3. Inline booster pumps

Inline booster pumps are pumps that do not draw water directly from storage.

a. Distribution systems with inline booster pumps shall not cause main pressures to drop below 35 PSIG during normal working conditions in any part of the system delivering water to the booster station.
b. All pumps shall be accessible for servicing and shall be valved and piped so that each pump can be isolated and removed with the remaining pumps in service.

6.4.4. Individual home booster pumps

Water systems shall be designed so that individual home booster pumps are not necessary for maintaining adequate pressure and flow for individual service from the public water supply mains at the point of connection.

DRAFT

6.4.5. Automatic stations

All automatic stations should be provided with automatic signaling apparatus that will report when the station is out of service. All remote-controlled stations shall be electrically operated and controlled and shall have signaling apparatus of proven performance.

6.5. Appurtenances.

6.5.1. Valves

Pumps shall be adequately valved to permit satisfactory operation, maintenance, and repair of the equipment. If foot valves are necessary, they shall have a net valve area of at least 2½ times the area of the suction pipe and they shall be screened. Each pump shall have a positive-acting check valve on the discharge side between the pump and the shut-off valve.

6.5.2. Piping

In general, piping shall:

a. Be designed so that the friction losses will be minimized;
b. Not be subject to contamination;
c. Have watertight joints;
d. Be protected against surge or water hammer;
e. Be such that each pump has an individual suction line or that the lines shall be so manifolded that they will ensure similar hydraulic and operating conditions;
f. Be equipped with a hose bib for cleaning; and
g. Be equipped with smooth-nose sampling taps constructed of brass, bronze, or stainless steel on both the suction and discharge.

6.5.3. Gages and meters

a. Each pump discharge header shall be equipped with a rate of flow meter that totals the gallons of water pumped and each pump shall:
   1. ~~h~~Have a standard pressure gage on its discharge line;
   2. ~~h~~Have a compound gage on its suction line; and
   3. ~~h~~Have a totaling elapsed time of operation meter.
b. Design should consider continuous monitoring devices on gauges, meters and other instruments.

6.5.4. Water seals

a. Water seals shall not be supplied with water of a lesser sanitary quality than that of the water being pumped.
b. Where pumps are sealed with potable water and are pumping water of lesser sanitary quality, the seal shall:
   1. Be provided with a break tank open to atmospheric pressure;
   2. Have an air gap of at least one inch or two pipe diameters, whichever is greater, between the feeder line and the spill line of the tank; or
   3. Provided with a reduced pressure principle backflow prevention assembly.

DRAFT

6.5.5. Controls

Pumps, their prime movers, and accessories, shall be controlled in such a manner that they will operate at rated capacity without dangerous overload. Where two or more pumps are installed, provision shall be made for alternating pumps. Provision shall be made to prevent energizing the motor in the event of a backspin cycle. Electrical controls shall be located above grade.

6.5.6. Power

Water systems that provide essential services or require continuous service should make an arrangement for back-up power. Pumping stations to be served by portable power generators should be equipped with permanent in-place electric connections and controls for operating on the power generator.

6.5.7. Water pre-lubrication

When automatic pre-lubrication of pump bearings is necessary and an auxiliary direct drive power supply is provided, the pre-lubrication line shall be provided with a valved bypass around the automatic control so that the bearings can, if necessary, be lubricated manually before the pump is started, or the pre-lubrication controls shall be wired to the auxiliary power supply.

6.5.8. Oil or grease lubrication

All lubricants which come into contact with potable water shall be certified for conformance to ANSI/NSF Standard 60-H-1. Not all lubricants labeled as "Food Grade" meet the specifications of NSF 60-H-1.

6.6. Well Houses.

Well houses are considered pumping stations and shall meet the design specifications of this chapter, except that duplicate pumping units (wells) are not required as per 6.3.1 of this chapter.

a. Well houses shall conform to the "Site location and security consideration" requirements of this document, with the exception of wells specifically located in floodplains for the source of water, such as alluvial and collector wells. In these cases the well house or platform and electrical controls shall be elevated above the 100-year flood event or flood of record, whichever is greater.
b. Requirements for sample taps are specified in Chapter 2 "Plant Sample Taps", and Chapter 3 "Discharge Piping" of this document. When possible, sample taps should be installed at or over a sink, with one for raw well water and one for finished water after treatment, to provide a safe work area for collecting samples and allow the water to be safely routed to a drain.
c. Where hose bibs are provided as a source of water for cleaning, they shall be protected by atmospheric vacuum breakers.
d. When chemical treatment is applied at a well, separate rooms with adequate ventilation to the outside should be provided to reduce corrosive vapors within the well house, notwithstanding other requirements specified in Chapter 5 of this document.
e. When possible, well houses should be provided with adequate access in and out of the well house when the well is being serviced.
f. Well houses shall be provided with adequate drainage, at a minimum a floor drain or a flap gate in the wall. Drains shall not be directly connected to a sanitary sewer or storm sewer,

DRAFT

but shall be provided with an acceptable air gap or drain to daylight. The discharge end of the drain shall be protected by a corrosion resistant screen to prevent entrance by insects or vermin.

g. Power lifting equipment for removal pumps, motors and equipment is not required where provided by the well service company or pump installer.

DRAFT

Chapter 7 - Minimum Design Standards for Finished Water Storage Tanks and Reservoirs

7.0. General Design and Construction Standards.

7.0.1. AWWA Standards for unpressurized tanks and reservoirs

Unless otherwise noted in these standards, unpressurized tanks and reservoirs for finished water storage shall be designed and constructed in accordance with the latest edition of the American Water Works Association (AWWA) standards:

7.0.2. Parameters for unpressurized tanks and reservoirs for finished water storage

These parameters shall be considered during the design of unpressurized tanks and reservoirs for finished water storage.

7.0.2.1. Tank design

Tank design should be part of a unified long range, engineering design that includes wells, treatment plants, high service pumps, booster pumps, and distribution mains. System design shall describe how normal system flows and pressures will be maintained when the storage facility is out of service for maintenance. Since tanks have an approximate useful life of 50 years, the design should consider future growth, including the elevation of areas likely to be developed during the useful life of the tank. Current service area and future service area should be divided into appropriate pressure zones with operating pressures between 35 PSIG and 100 PSIG. All of these items should be reflected in the design to ensure the tank will not become obsolete during its useful life.

7.0.2.2. Storage water quality

Long detention times and poor water circulation can lead to the loss of disinfectant residuals, taste and odor complaints, formation of disinfection byproducts, and other water quality issues including microbial contamination. The following design features shall be evaluated to improve circulation and maintain optimum storage water quality:

a. Storage facilities may not develop complete mixing. This can lead to stagnant zones where the water age exceeds the average water age in the facility. Separate inlet and outlet lines are recommended to promote circulation with a check valve on the inlet line to force flow into one line and out the other. A bypass line and valves on both the inlet and outlet lines must be installed to allow the storage facility to be isolated and drained for inspection and maintenance. The orientation, placement, size and separation of inlet and outlet lines shall be designed to promote mixing;
b. If detention time is needed for disinfection, separate inlet and outlet lines shall be provided.

DRAFT

c. Specialty mechanical mixers may be used to obtain and maintain proper mixing to prevent stagnation. Mixers shall not be installed in facilities used to provide disinfection detention;
d. Check valves or duckbilled valves may be installed on a combined inlet-outlet line to promote mixing. This arrangement shall not be considered as separate inlet and outlet lines for the purpose of disinfection detention;
e. The storage facility should be designed to turn over a sufficient percentage of the stored water daily to minimize water quality problems;
f. Temperature differences within a large storage facility can cause thermal stratification. Design of the storage facility shall include minimizing thermal stratification; and
g. Studies have shown storage located near the center of a pressure zone will have lower water ages than those located near the edge of a pressure zone. Distribution system models to evaluate potential water age and system hydraulics should be used to evaluate storage facility sites.

7.0.2.3. Provisions for sampling

Sampling taps shall be provided to allow for collection of water quality samples for bacteriological and chemical analysis. At a minimum, sample taps shall be provided that allow for samples of the water quality from the influent and effluent of the storage tank. Additional taps from representative portions within the storage tank may be used for better monitoring of water quality. All sample taps shall be easily accessible.

7.0.3. Location

a. With exception of foundations using piers and pilings, the bottom of foundations or footings for reservoirs, standpipes, ground storage tanks and elevated tanks shall be above the 100-year return frequency flood level or the highest known historic flood elevation, whichever is higher.
b. Tops of footings or foundations for elevated tanks, ground storage tanks and standpipes shall be at least one foot above the finished grade.
c. With exception of foundations using piers and pilings, the bottom of foundations or footings for reservoirs, ground storage tanks, standpipes, and elevated tanks shall be above the true ground water level.
d. The bottom of reservoirs, ground storage tanks, and standpipes should be placed above the normal ground surface. When the bottom must be placed below ground surface, the storage facility shall be constructed of concrete with a foundation drainage system provided, and special design consideration shall be given to assure water tightness. Except for those drains necessary for the operation of the reservoir, sewers, drains, standing water and similar sources of contamination must be kept at least 50 feet from the storage facility, except that specially constructed gravity sewers may be located no closer than 20 feet. These specially constructed gravity sewers shall be made of restrained, mechanical joint or fusion welded water main pipe pressure tested in place to 50 PSIG of pressure without leakage. No part of a steel storage tank shall be located below ground surface.

DRAFT

e. The top of the reservoirs shall not be less than two feet above the normal ground surface except that clear wells under filters may be exempted when the total design gives the same protection. The area surrounding a reservoir shall be graded to prevent surface water from standing within 50 feet of it.
f. The area surrounding ground storage tanks, standpipes, and elevated tanks shall be graded and sloped away from each facility and graded to prevent surface water from standing within 20 feet of it. The area beneath legged elevated tanks shall be graded and sloped in a manner that will prevent surface water from standing around footings or foundations or within the area.
g. When selecting sites for reservoirs, ground storage tanks, standpipes, and elevated tanks, provisions shall be made to conduct overflow water away from the site without damaging surrounding property.
h. The site selected shall be of sufficient size to allow adequate space for trucks and other equipment necessary for maintenance of the storage facility. The site shall be provided with all-weather driveways and parking areas to allow off road parking and access for equipment during maintenance.
i. When selecting a site for a painted elevated tank or standpipe, the proximity of residences, businesses, highways, public roads, parking lots, and buildings and their effect on the ability to paint the facility shall be considered. In general, an elevated tank or standpipe should be no closer to a residence, business, highway, public road, parking lot, or building than the overall height of the facility.
j. Electric control buildings and pump and well houses shall not be located beneath a legged elevated tank, but should be at least fifty feet from any elevated tank or standpipe.
k. The proximity of elevated tanks and standpipes to airports and aviation flyways and the requirements of the Federal Aviation Administration shall be considered.

7.0.4. Protection of finished water storage structures

All finished water storage structures shall be protected from trespassing, unauthorized access and vandalism.

a. Protection shall include at least the following:
   1. Locked hatches and other access openings;
   2. Physical barriers to entrance of ladders; and
   3. Multiple uses of storage facilities or their structures shall be approved by the Department, and should be part of the original design.
b. Protection should include the following:
   1. Exterior lighting that adequately lights the perimeter of the facility; and
   2. Fencing with locked gates.
c. See also section 2.5, Security Measures.

DRAFT

7.0.5. Vents on unpressurized finished water storage structures

All unpressurized finished water storage structures shall be vented. Overflows shall not be considered vents. Open construction between the sidewall and roof is not permissible. Vents shall meet the following criteria:

a. Vents shall be sized with sufficient capacity to pass air so that the maximum flow of water entering or leaving the tank will not cause excessive pressure or vacuum. Maximum flow of water leaving a storage facility shall include the maximum fire flow to be provided in the area served by the facility plus the maximum peak domestic flow plus the peak commercial flow. Vents for storage used to provide filter backwash shall be sized to pass the maximum backwash flow rate. Consideration should be given to the flow rate produced by a catastrophic large main failure near the facility. Resistance of air flow caused by the vent screens shall be considered in sizing the vents;
b. Be designed to exclude precipitation and surface water;
c. Be screened to exclude birds, insects, and animals, and to the extent possible airborne dust;
d. The lowest point of air intake shall be a minimum of 24 inches above the roof. At least one screen covering the entire opening shall be no coarser than 18-mesh;
e. Pressure vacuum-screened vents or a separate pressure-vacuum relief mechanism shall be provided that will operate in the event that the screens frost over or become clogged. The screens or relief mechanism shall not be damaged by the occurrence and shall return automatically to operating position after the blockage is cleared. The primary purpose of the vents is to prevent catastrophic structural failure of the tank caused by pressure differential. No alterations shall be made to vents to interfere with this primary purpose; and
f. Clearwell vents shall vent to the outside.

7.0.6. Overflows on unpressurized finished water storage structures

All unpressurized finished water storage structures shall be provided with an overflow. Overflows shall meet the following criteria:

a. Overflows shall be sized to permit the waste of water in excess of the maximum filling rate with a head not more than six inches above the lip of the overflow. Resistance of flow through the screen and flap shall be considered in sizing the overflow;
b. To prevent water and ice damage to the tank and its surroundings, overflows shall be brought down to an elevation no closer than 12 inches and no greater than 24 inches above the ground surface. Overflows should terminate at the bottom with an elbow directed away from the foundation, and shall discharge over a drainage inlet structure or splash plate. Overflows shall not be extended below ground or directly connected to a sewer or storm drain;
c. Overflows that discharge to a drainage inlet structure shall terminate at least 5 inches above the highest lip of the inlet structure;
d. Overflows shall be protected from entrance of insects, birds or animals by a duckbilled type check valve, or by a tight fitting counter weighted flap valve
e. Flap valves and check valves should be designed and operate such that they will close completely, seal tightly and not stick open;

DRAFT

f. When screens are used, mesh shall be appropriately sized or design shall limit restriction of overflow and minimize clogging potential;
g. To confirm the integrity of the screens or mechanical devices and check valves, the devices shall be located where they can be inspected as part of routine maintenance;
h. Overflows should be diverted to minimize property damage and inconvenience to adjacent property owners; and
i. Overflows shall be provided for all clearwells. Overflows for clearwells shall be extended to daylight or discharged to a sump or manhole through an air gap. The discharge pipe of the sump or manhole shall discharge to daylight or the sump or manhole shall be equipped with a pump or pumps sized to carry the maximum probable overflow rate.

7.0.7. Freeze protection for unpressurized finished water storage structures

All unpressurized finished water storage structures and their appurtenances including the internal structural components riser pipes, overflows, vents, and hatches shall be designed to prevent freezing that will interfere with proper functioning or cause structural damage to the storage vessel. Design shall be based on a 100-year return frequency extended low temperature period and average wind velocity. Equipment used for freeze protection that will come into contact with the potable water shall meet ANSI/NSF Standard 60 or be approved by the Department. If a water circulation system is used, it is recommended that the circulation pipe should be located separately from the riser pipe. Water level controls shall be flexible and accurate enough to allow operators to easily adjust tower operation to weather conditions.

7.0.8. Catwalks

Every catwalk over finished water in a storage structure shall have a solid floor with raised edges so designed that shoe scrapings and dirt will not fall into the water.

7.0.9. Corrosion protection

a. Proper protection shall be given to metal surfaces. Tanks constructed of steel, wrought iron, or other metals subject to corrosion shall have all metal interior and exterior surfaces painted.
    1. Coatings for exterior surfaces shall be lead free.
    2. Exterior paint color should be chosen to help manage the temperature of stored water to reduce freezing or reduce excessive summer temperatures as needed.
    3. Interior paint systems shall be certified for drinking water use under the latest ANSI/NSF Standard 61. Interior paint must be applied, cured, and used in a manner consistent with the ANSI/NSF approval.
    4. Interior paint systems shall be properly applied and cured so that after curing, the coating shall not transfer any substance to the water which could be toxic or cause taste or odor problems. After painting and proper curing are completed and the tank is filled, but prior to placing it in service, an analysis

DRAFT

for volatile organic compounds should be conducted on the water in the tank to establish that the coating is properly cured.

5. In ozone non-attainment areas, consideration should be made for using VOC-free paint.

b. Tanks constructed of corrosion resistant metals shall be designed to meet the same structural requirements outlined in section 7.0.1. and should be coated. Corrosion resistant metals shall be chosen to resist corrosion from all naturally occurring chemicals in the water stored, all chemicals added as part of water treatment including the addition of chlorine and other disinfectants, and the natural atmosphere including current and expected future air pollutants in the area.

7.0.10. Drains on unpressurized tanks and reservoirs

Unpressurized tanks and reservoirs shall be equipped with a drain and have facilities for collecting bacteriological samples.

a. The design shall allow tanks and reservoirs to be taken offline, drained, cleaned, repaired, and painted without causing loss of pressure in the distribution system.
b. No drain shall have a direct connection to a sewer or storm drain.
c. Elevated tanks and standpipes with a nominal capacity of 30,000 gallons or more that provide pressure by gravity shall be equipped with an appropriately sized drain. The piping, valves, and fire hydrant, blow-off, flush hydrant or other appropriate device shall be designed and constructed to allow the tank to be taken off line and drained through the device.
d. Other above ground tanks shall be equipped with a flushing device. The piping, valves, and flushing device shall be designed and constructed to allow the tank to be taken offline and drained through the device.
e. Reservoirs, clearwells, and other below ground storage facilities shall either be equipped with drains to daylight or sumps with floors sloped to the sumps to facilitate inspection and cleaning. Drains shall be designed to prevent contamination from entering the storage facility. At a minimum, the discharge end of the drain shall pass through a headwall and be equipped with a tight fitting counterweighted flap valve designed so that it cannot open more than ninety degrees from horizontal to prevent them from sticking open. Access hatches shall be installed over sumps to allow access for installing pumps.

7.0.11. Roofs and sidewalls on unpressurized tanks and reservoirs

Unpressurized tanks and reservoirs shall have roofs and sidewalls designed and constructed to preserve the quality of the water stored.

a. All unpressurized finished water storage structures shall have suitable watertight roofs that prevent entrance of birds, animals, insects, and excessive dust and pollen.
b. Roofs shall be well drained. Roof downspouts shall not enter or pass through the storage structure.
c. The roof and side walls must be water tight with no openings except properly constructed vents, manways, overflows, risers, drains, pump mountings, control ports, or piping for inflow and outflow.

DRAFT

d. Any pipes running through the roof or side wall of a finished water storage structure must be welded or properly gasketed in metal tanks. In concrete tanks these pipes shall be connected to standard wall castings. These wall castings should have seepage rings imbedded in the concrete.
e. All penetrations through roofs or walls of storage facilities for installing a cathodic protection system, level sensors, level controls, power to tank mixing systems, or for any other purpose shall be water tight and provided with frames or curbs of no less than 4 inches.
f. Openings in a structure roof or top designed to accommodate control apparatus or pump columns shall be curbed and sleeved with proper additional shielding to prevent the access of surface or floor drainage water into the structure.
g. Valves and controls shall be located outside the storage structure so that the valve stems and similar projections will not pass through the roof or top of the reservoir.
h. Unpressurized finished water storage structures shall be designed and constructed to allow convenient access to the interior for cleaning, safety venting and maintenance.

7.0.12. Storage tank access

a. At least two hatches or manways must be provided above the waterline at each water compartment where space permits.
b. All roof hatches or manways shall be framed at least six inches above the surface of the roof and shall be fitted with a solid water tight gasketed cover.
c. The minimum size for roof hatches or manways shall be twenty four inches in diameter or square. Hatches or manways should be thirty inches in diameter or square, or greater.
d. At least one roof or top hatch shall be at least 30 inches in diameter or square. The frame shall extend at least six inches above the roof. The hatch shall be fitted with a solid water tight, gasketed, and hinged cover which overlaps the framed opening and extends down around the frame at least two inches. The hatch shall have a locking device.
e. All other hatches and manways shall be bolted and gasketed to provide a watertight seal, or conform to the above requirements.
f. All access hatches and manways for ground level structures shall be elevated at least 24 inches above the top of the facility or finished ground surface, whichever is higher and shall be fitted with a solid, water tight, gasketed hinged cover which overlaps the framed opening and extends down around the frame at least two inches, and shall have a locking device.
g. Pressure manways in riser pipes, stand pipes, and ground storage reservoirs:
    1. All standpipes ten feet in diameter or smaller and wet risers in elevated tanks that are three to ten feet in diameter shall have at least one ground level manway.
    2. All standpipes or ground storage tanks that are more than ten feet in diameter shall have at least two ground level manways
    3. All ground level manways shall have a minimum diameter of 24 inches. All tanks having more than one ground level manway shall have at least one manway that has a minimum diameter of 30 inches

DRAFT

4. All ground level manways shall have a minimum clearance of 24 inches between riser or tank bottom and the bottom of the manway opening.

7.0.13. Discharge pipes

The discharge pipes from all reservoirs shall be located in a manner that will prevent the flow of sediment into the distribution system. Removable silt stops should be provided.

7.0.14. Safety devices at unpressurized finished water storage structures

Unpressurized tanks and reservoirs shall be equipped with safety devices to allow safe inspection, repairs, maintenance, and painting.

a. Ladders, handrails, safety cages and other safety appurtenances shall conform to the federal OSHA regulation 29 CFR, Part 1910 Subpart D. These safety appurtenances shall also conform to any applicable local ordinances, codes, or standards that are more restrictive than OSHA standards.
b. Ladders, ladder guards, balcony railings, and safely located entrance hatches shall be provided where applicable. Safety climbing devices shall be provided on the ladders of all storage facilities not equipped with safety cages.
c. Railings or handholds shall be provided on elevated tanks where persons must transfer from the access tube to the water compartment or the roof ladder to the access hatch or manway.
d. Elevated tanks with fill pipes over four inches in diameter shall have protective bars over the opening spaced no more than four inches apart. Riser pipes of two feet or more in diameter may have bars or handrails around the riser opening. Because protective bars are frequently dislodged by ice thereby defeating their purpose, a safety handrail around the riser opening is the preferred method of protection.
e. Warning lights should be provided on standpipes and elevated storage tanks and shall be provided when required by the Federal Aviation Administration (FAA) or local codes.

7.0.15. Disinfection of unpressurized finished water storage structures

Disinfection of unpressurized finished water storage tanks and reservoirs following construction, repairs, painting, or other maintenance shall be done in accordance with the latest edition of the AWWA Standard for Disinfection of Water-Storage Facilities, AWWA C652.

a. At least one sample shall be analyzed to indicate microbiologically satisfactory water before the facility is placed into operation.
b. Disposal of chlorinated water from the tank shall be in accordance with Missouri Clean Water Commission requirements to protect aquatic life.

7.0.16. Antenna, wires, lighting and cables

The primary purpose of finished water storage facilities is to store adequate amounts of potable water for the public in a safe usable manner. Any secondary use of finished water storage structures shall not interfere with the safe use, inspection, operation, and maintenance of these facilities for their primary purpose. The

DRAFT

installation of appurtenances, such as antenna, shall be done in a manner that ensures no damage to the tank, coatings or water quality, or corrects any damage that occurred. The following shall be considered when designing antenna installations on finished water storage facilities.

a. Antenna and their wires or cables shall not be installed where they obstruct, restrict, or interfere with the safe use of any painter's vent, ladder, catwalk, access tube, hatch, manway, or accessway. Cables or wires shall not be directly attached to any ladder, handrail or step and shall not be installed behind any access ladder or in any other manner that interferes with the safe use of a ladder.
b. Antenna shall not be attached to any part of an access ladder, overflow pipe, vent, access hatch, or manway.
c. A structural evaluation shall be done of the location on the storage facility and of the method of attaching the antenna and its cables or wires that includes wind loads and increased ice and snow loads as well as the weight of the equipment. The evaluation shall determine the need for stiffeners, plates to distribute loads or other structural improvements needed to support the antenna and their wires or cables.
d. The ability to sandblast and paint the storage facility without removing an antenna or its cables shall be considered. Cables should be supported on brackets that stand off of the storage tank to allow sand blasting and painting beneath the cables. Small wires and cables should be installed in conduits to prevent damage during sandblasting and to allow them to be adequately secured. The additional costs of removing antenna, cables, and wires to allow the storage facility to be properly prepared and painted shall be considered with deciding to install an antenna.
e. Cables and wire shall be adequately supported and secured by specific brackets that minimize cable and wire movement and prevent wires or cables from rubbing against the storage structure. Brackets should also be designed to prevent unauthorized access to the storage structure. Cable brackets, trays, ladders, or raceways shall be material that will not create corrosion issues. Attaching a cable or wire with tape or plastic zip ties to existing brackets of storage appurtenances shall not be approved.
f. Bolts holding on antenna and cable brackets shall not penetrate the walls or roofs of water holding portions of storage facilities or tubular legs of multicolumn elevated tanks.
g. Clamps or bands used to attach equipment to storage facilities shall be sealed, provided with gaskets, or otherwise designed and installed to prevent corrosion and to protect the coating beneath them from damage.
h. Any welded attachments to a finished water storage facility shall be seal welded to prevent corrosion. Both interior and exterior coatings shall be repaired after any welding done on a water storage facility.
i. Consideration shall be given to shielding and grounding of cables and wires to prevent corrosion to the storage facility.
j. Base transmission cabinets, buildings, or other antenna ground equipment shall not be located directly beneath an elevated tank where it will interfere with the deployment, staging, or movement of manpower and equipment for maintenance.

DRAFT

Base transmission cabinets or other antenna ground equipment located inside of the dry pedestal of an elevated tank shall be located so that they do not interfere with the access or operation and maintenance of any of the tank components.

k. Where multiple large antenna exist or are planned for a storage facility, the structural integrity of the entire facility and its foundation shall be evaluated to assure that it will safely withstand the added weight plus any extra snow, ice, and wind loads.
l. Where multiple antennas exist or are planned for a storage facility, an overall plan for routing cables and wires shall be provided.
m. Antennas transmitting intense radiofrequency radiation are a health and safety hazard to anyone climbing near them on the storage facility. Specific warning signs shall be placed at the access ladders to these facilities. Contracts with the owners of radiofrequency radiation emitting antenna shall require them to turn off the antenna during inspection or maintenance of the storage facility upon the request of the tower owner.

7.0.17. Vaults associated with finished water storage

Vaults for valves, piping, and other equipment associated with finished water storage facilities shall meet the following requirements.

a. Vaults may be confined spaces with required entry procedures, and may be permit-required confined spaces as defined per OSHA regulations.
b. A power ventilation system should be provided for each vault and sized to properly vent the confined space.
c. Vaults should be water tight to exclude entrance of surface or sub-surface water. Open dirt, gravel or rock bottomed vaults shall require an exception.
d. All openings and penetrations for vents, piping, power service, control wires, etc into the vault shall be water tight.
e. All accessways to vaults shall be fitted with a locking device, shall be framed at least six inches, but no more than one foot above the final ground surface, and shall be fitted with a solid, water tight, hinged cover. The accessway cover shall be self-supporting when open and shall overlap the framed opening and extend down around the frame at least two inches.
f. Accessways to vaults shall be sufficiently large enough to allow easy removal of valves and other equipment from the vault.
g. Accessways to vaults shall be located so that an operator does not have to drop or climb onto piping or equipment to enter the vault to protect both the equipment and the operator from damage.
h. Vaults containing equipment that requires routine maintenance or inspection such as altitude valve vaults or control valve vaults shall be fitted with permanent access ladders equipped with extendable ladder safety posts to facilitate safe access to the ladder and the vault. Consideration should be given to using corrosion or rot resistant material.
i. A floor sump shall be provided in each vault and the floor shall slope to the sump. The sump shall either be provided with a drain to daylight or with a sump pump that has a discharge extended above ground and discharging away from the vault.

DRAFT

j. Vents for vaults shall extend at least eighteen inches above the final ground surface and shall either be capped or downturned to prevent water entrance and shall be screened to prevent insects from entering the vault.
k. Interior lighting and heating facilities should be considered for vaults.
l. All vaults shall have sample taps and appropriately sized pressure gauges installed on the storage side of the piping, unless the plumbing allows sampling elsewhere.
m. Vaults containing altitude valves or water level controls shall have appropriately sized pressure gauges on both the influent and effluent piping of the vault.
n. Piping in vaults shall be installed far enough above the floor and below the roof of the vault to facilitate painting.
o. Adequate permanent supports shall be installed to support valves and piping in the vault.
p. Sufficient influent and effluent valves shall be installed to allow equipment in the vault to be removed without draining the storage facility.

7.1. Tanks and Reservoirs for Finished Water Storage.

7.1.1. Fire protection

The primary purpose of a public water system is to produce and deliver adequate quantities of safe drinking water to the public. Failure to fulfill this purpose has serious adverse effects on public health. Use of the public water systems for any other purpose such as irrigation, recreation, industrial production, or fire protection is of secondary importance to the primary purpose. No secondary use of a public water system shall be allowed to degrade the safety and sanitary quality of the drinking water or system.

Public water supplies that provide fire protection should be capable of providing the calculated maximum needed fire flow within its distribution system for a duration of two hours up to a maximum flow of 3500 GPM. The Insurance Services Office (ISO) Guide for Determination of Needed Fire Flow is not a design criteria, but has been shown to reasonably approximate actual fire flow needed to suppress a fire in a real-life situation. Some communities have local fire codes that set fire suppression requirements that differ from the ISO guide. Designers should consult with local authorities before designing a system or making improvements intended to provide fire protection.

For new water systems or improvements within existing distribution systems, it is customary to provide for the needed fire flow for one major fire in the design area using the ISO guide or local requirements. It is very unusual for existing distribution systems to be capable of providing every needed fire flow within its service area. Therefore, this guide applies only to proposed new or proposed improvements to areas of water distribution systems intended to provide fire protection. Private and public protection at properties with needed fire flows that exceed 3500 GPM should be individually evaluated with consideration given to additional methods of fire protection other than the public water distribution system.

Needed fire flows are met by a combination of flows from water sources and from elevated or pumped water storage.

DRAFT

a. The reliability of the flow from sources and pumps shall be considered when sizing water storage facilities.
b. Systems shall be capable of providing designed pumped flows with the largest pump or well out of service.
c. The age of the water and its impact on water quality shall be considered when designing water storage. Generally, at least one quarter of the water in each storage facility should be turned over every day.
d. Water stored for fire protection shall be in addition to that stored for normal average daily usage.
e. Public water supplies that provide fire protection shall have finished water storage tanks, reservoirs, and other facilities with sufficient capacity to provide minimum required fire flow for the length of fire duration and shall provide adequate storage to meet diurnal peak flow with fire flow being considered. Systems that purchase water wholesale from another approved public water system may contract to have needed water storage and fire flows provided by their water supplier. These additional water demands shall be considered in the design of the wholesale supplier's storage and distribution system.
f. Systems that do not provide a minimum fire flow of 250 GPM for fire duration of two hours are not designed to provide any fire protection.

7.1.2. No fire protection

Public water supplies that do not provide fire protection shall have sufficient finished water storage to meet the minimum design operating pressure and flow for the diurnal flow pattern on the design maximum usage day with all well pumps, treatment plants, high service pumps, booster pumps, or other equipment that affect pressure and flow in operation. Systems that purchase water wholesale from another approved public water supply system may contract to have needed water storage provided by their water supplier. These additional water demands shall be considered in the design of the wholesale supplier's storage and distribution system. Determination of needed water storage can be achieved by the following methods:

a. Provide finished water elevated storage with nominal capacity equal to or greater than one day's average demand. For standpipes, the volume above the elevation, which provides 35 PSIG at the tower base, shall be counted as nominal capacity.
b. Provide ground level finished water storage with nominal capacity equal to or greater than one day's average demand. Duplex or variable speed high service pumps shall be provided with this option. The high service pumps shall have a capacity capable of meeting design instantaneous peak flow and of maintaining a minimum pressure of 35 PSIG throughout the service area with the largest pump out of service. Emergency power generation facilities shall be provided to assure that water outages or low water pressures do not occur. Note the volume above low level withdrawal pump shut down is counted as nominal capacity.
c. Estimate or document diurnal flow pattern and design maximum day's usage. Calculate the minimum nominal finished water storage needed to maintain design operating pressure and flow with the designed production of well pumps, treatment plant high service pumps, booster pumps or other equipment that affect pressure and flow provided. If multiple high service pumps, booster pumps or

DRAFT

other equipment are not designed to routinely operate simultaneously, their simultaneous operation shall not be considered when calculating needed storage.

d. Provide hydropneumatic storage as outlined in section 7.4.

7.1.3. Storage capacity for unpressurized storage facilities

Storage facility capacities estimated in engineering design studies and finalized in engineering final plans and as-built plans submitted to the Department shall include the elevation and volume data specified here.

7.1.3.1. Elevations

a. For preliminary engineering designs, the following elevations must be provided to the nearest 1.0 feet above mean sea level (MSL).
   1. Elevation of the finished grade (ground surface) at the base of the storage facility.
   2. Overflow elevation.
   3. Head range and low water elevation.
   4. Corresponding elevations of existing storage facilities in the same pressure zone.
   5. Elevation of original ground level for storage reservoirs.

b. Plans and specifications submitted for construction approval shall include the following elevations expressed to the nearest 1.0 feet above mean sea level (MSL).
   1. Elevation of the finished grade (ground surface) at the base of the storage facility.
   2. Elevation of the top of the footings and foundations.
   3. Elevation of low water level and head range.
   4. Overflow elevation.
   5. Withdrawal pumps, filling pump(s) and control valve(s) on and off elevations.
   6. Freeboard between the top of the overflow and the ceiling of the storage facility.

c. As-built plans or shop drawings shall be submitted and shall include the following elevations expressed to the nearest 0.1 feet above mean sea level (MSL).
   1. Elevations of the finished grade (ground surface) at the base of the storage facility.
   2. Elevation of the top of the footings and foundations.
   3. Elevations of low water level and head range.
   4. Overflow elevation.
   5. Withdrawal pumps, filling pump(s) and control valve(s) on and off elevations.
   6. Elevation of the top of the storage facility.
   7. Elevation of the bottom of elevated tank bowl.
   8. Freeboard between the top of the overflow and the ceiling of the storage facility.

DRAFT

7.1.3.2. Volumes

a. For preliminary engineering design studies the following storage volumes shall be provided.
   1. The total storage volume of the storage facility.
   2. The maximum effective (usable) storage volume. This is the volume between overflow and the low water level, which provides the minimum 35 PSIG at the service connection to the highest customer served by gravity by the storage facility.
   3. The operating volume. This is the volume between the normal operating levels of the facility. The volume between the lowest elevation at which the filling pumps start (or the filling control valves open) and the elevation at which the filling pumps stop (or the filling control valves close). If withdrawal pumps are used this "operating volume" is the volume between fill pump stop level and the elevation at which the withdrawal pumps normally stop.
   4. When used for disinfection contact time, the volume used for contact time. This is the volume of water below the lowest shut-off level of the clearwell, pumping well, ground storage tank and other pumped storage or the lowest allowed normal level of the storage facility.

b. Plans and specifications submitted for construction approval shall include the following:
   1. The total storage volume of the reservoir or tank.
   2. The maximum effective (usable) storage volume. This is the volume between overflow and the low water level, which provides the minimum 35 PSIG at the service connection to the highest customer served by gravity by the storage facility.
   3. The operating volume. This is the volume between the normal operating levels of the facility. The volume between the lowest elevation at which the filling pumps start (or the filling control valves open) and the elevation at which the filling pumps stop (or the filling control valves close). If withdrawal pumps are used this "operating volume" is the volume between fill pump stop level and the elevation at which the withdrawal pumps normally stop.
   4. When used for disinfection contact time, the volume used for contact time. This is the volume of water below the lowest shut-off level of the clearwell, pumping well, ground storage tank and other pumped storage, or the lowest allowed normal level of the storage facility.

c. As-built plans or shop drawings shall be submitted and shall include the actual volumes for the following:
   1. The total storage volume of the storage facility. For elevated storage tanks a volume/elevation curve shall be submitted.
   2. The maximum effective (usable) storage volume. This is the volume between overflow and the low water level, which provides the minimum 35 PSIG at the service connection to the highest customer served by gravity by the storage facility.

DRAFT

3. The operating volume. This is the volume between the normal operating levels of the facility. The volume between the lowest elevation at which the filling pumps start (or the filling control valves open) and the elevation at which the filling pumps stop (or the filling control valves close). If withdrawal pumps are used this "operating volume" is the volume between fill pump stop level and the elevation at which the withdrawal pumps normally stop.
4. When used for disinfection contact time, the volume used for contact time. This is the volume of water below the lowest shut-off level of the clearwell, pumping well, ground storage tank and other pumped storage, or the lowest allowed normal level of the storage facility.
5. The volume between the elevation that will provide 20 PSIG static pressure at the highest customer served by gravity by the storage facility, and the elevation at which the storage facility begins to overflow is the fire suppression capacity for storage facilities.

7.1.4. Costs

As part of the final engineering certification on a finished water storage facility construction project, the engineer shall submit the final cost of the facility excluding land or easement costs.

7.2. Plant Storage.

At a minimum, plant water storage (any storage following treatment and prior to distribution) shall be adequate to provide all required disinfection contact time. These requirements are in addition to the applicable requirements listed in subsections 7.0. and 7.1.

7.2.1. Filter backwash

Wash water tanks are finished water storage facilities and shall meet all of the applicable requirements for storage facilities.

a. Wash water tanks shall be sized to provide the filter backwash at the design filter backwash rate.
b. Wash water tanks, pumps, and finished water storage shall be designed to allow backwashing at least two filters in rapid succession in order to meet the most extreme plant operational problems expected.
c. Plants with four or fewer filters should have sufficient wash water capacity to backwash at least two filters in rapid succession.
d. The time and rate required to refill wash water tanks and their impact on plant operation shall be provided in the submittals to the Department.
e. Special consideration shall be given to preventing the water in wash water tanks from freezing.
f. Stand-by backwashing facilities shall be provided to allow the tank to be removed from service for maintenance.

7.2.2. Clearwells

Clearwells are finished water storage facilities that are part of a treatment plant, and shall meet all of the applicable requirements for finished water storage facilities.

DRAFT

They are used to provide disinfection contact time and as such are the last stage of treatment. Additional design requirements are available in the publication "Minimum Design Standards and Guide for Community Water Systems.

7.2.3. Receiving basins and pump wet wells

Receiving basins and pump wet wells for finished water shall be designed as finished water storage structures.

7.2.4. Finished water adjacent to unsafe water

Finished water must not be stored or conveyed into a compartment adjacent to unsafe water when the two compartments are separated by a single wall.

DRAFT

7.3. Distribution Storage

These requirements are in addition to the applicable requirements listed in subsections 7.0. and 7.1.

7.3.1. Minimum PSIG at normal ground elevation

Distribution storage shall be designed and constructed in conjunction with production facilities, pumping facilities, and distribution mains to provide a minimum of 35 PSIG pressure at the normal ground elevation at every point of the distribution system during all conditions of design flow. Normal operating conditions include extended drought usage and diurnal peak flow.

7.3.2. Working pressure PSIG at normal ground elevation

Distribution storage should be designed and constructed in conjunction with production facilities, pumping facilities, and distribution mains to provide a working pressure of 60 to 80 PSIG at the normal ground elevation at every point in the distribution system during all normal operating conditions except fire flow.

a. Current service area and future service area should be divided into appropriate pressure zones with operating pressures between 35 PSIG and 100 PSIG.
b. Multiple pressure zone systems should have separate storage facilities for each zone and should be equipped so that water can be transferred between zones with pump stations and pressure control valves.
c. Each public water system shall be designed to maintain normal system pressures and flows with any storage facility out of service for maintenance or should have at least two storage tanks or reservoirs so that removing a tank or reservoir for maintenance will not disrupt distribution system pressure.
d. Where static pressures exceed 100 PSIG, pressure reducing devices should be provided in the mains or at the individual customer services.
e. The maximum variation between high and low levels in storage structures providing gravity pressure to the distribution system should not exceed 30 feet.

7.3.3. Distribution Storage Controls

Distribution storage facilities shall be equipped with adequate controls to maintain levels in the tanks/reservoirs.

a. Level indicating devices should be located at a central location.
b. Pumps should be controlled from tank levels with the signal transmitted by telemetry equipment when any appreciable head loss occurs in the distribution system between the pump and the storage structure. Pressure control valves (usually installed on the discharge line and pump to waste line with a control system that opens and closes these valves simultaneous to control pressure surge/water hammer) should be installed on pumps when pumps and storage facilities are not adjacent. Variable speed pumps and soft-start/soft-stop equipment may be acceptable alternatives to control valves. Where large elevation differences exist between the pumps and the storage facilities, a pressure control valve may be justified as a failsafe device in the event of power outages in addition to variable speed pumps or soft-start/soft-stop equipment.

DRAFT

c. Overflow and low level warnings or alarms should be located at places in the community where these will be under responsible surveillance 24 hours per day.

7.4. Hydropneumatic Storage.

The most common applications are to maintain delivery of water within a selected pressure range while minimizing pump cycling, or to act as buffer tanks to absorb water hammer shocks in large capacity pumping systems. The two basic types of pressure tanks are conventional tanks and captive air tanks. Conventional tanks are those which allow air-water contact. Captive air tanks, often called bladder tanks have a membrane separating the air from the water phase.

7.4.1. Hydropneumatic tank design and installation

a. Hydropneumatic tanks shall be certified for drinking water use under the latest version of ANSI/NSF Standard 61.
b. Large hydropneumatic tanks with a gross volume larger than 120 gallons shall be designed and constructed in accordance with the latest ASME Boiler and Pressure Vessel Code as published by the American Society of Mechanical Engineers.
c. Hydropneumatic tanks with a gross volume of 120 gallons or less shall meet the latest ANSI / WSC pressure storage tank standard for Pressure Water Storage Tanks as published by the Water Systems Council.
d. Hydropneumatic tanks shall be individually connected to the supply line to the distribution system to improve circulation to individual tanks.
e. Piping connecting tanks shall have sufficient valves and bypass lines to allow each individual tank to be taken offline, drained, repaired, painted, or replaced without causing loss of pressure in the distribution system.
f. Proper protection shall be given to metal surfaces of hydropneumatic tanks
    1. Interior coatings shall be certified for drinking water use under the latest ANSI/NSF Standard 61.
    2. Tanks constructed of steel or other metal subject to corrosion shall have both interior and exterior surfaces painted.
    3. Tanks constructed of corrosion resistant metals shall not be required to be painted. Corrosion resistant metals shall be chosen to resist corrosion from all naturally occurring chemicals in the water stored, all chemicals added as part of water treatment including chlorine and other disinfectants and the natural atmosphere. Tanks constructed of corrosion resistant metals shall be certified for drinking water use under the latest ANSI/NSF Standard 61.
    4. Hydropneumatic tanks 500 gallons or greater in size shall have interiors that are either epoxy or glass coated.
g. Hydropneumatic tanks 500 gallons or greater in size and all tanks used for disinfection contact time shall have separate inlet and outlet lines to provide positive flow through the tanks. Hydropneumatic tanks that do not have separate inlet and outlet lines do not provide disinfection detention time.
h. Hydropneumatic tanks with gross volume less than 500 gallons per tank shall be designed and constructed with the following appurtenances and features:
    1. Each tank shall be completely housed in a heated building. Tanks shall not be buried or installed in direct contact with the ground to prevent freezing;

DRAFT

2. Each tank shall be equipped with a Schrader type valve to allow air to be added to the tank and to check air pressure;
3. Tanks shall be equipped with automatic controls to control pressure/water level in the tanks;
4. A means to manage the volume and pressure of air in the air cushion of pressure tanks shall be provided but this may be done manually with portable equipment;
5. There shall be at least one pressure gage in the tank manifold; and
6. Sufficient space shall be provided around the tanks to be accessible to maintenance.

7.4.2. Sizing hydropneumatic tanks

a. Hydropneumatic tanks used as the only storage for non-community public water supplies shall have pump and usable storage size based on the number and type of plumbing fixtures served and the estimated cycle time for the largest supplying pump. See Appendix F of this document for more information.
b. Hydropneumatic tanks used in conjunction with other storage and booster pumps shall have sufficient storage to control the minimum pump run times to meet the maximum cycle times per hour recommended by the pump manufacturer for the largest supplying pump. The length of minimum run time varies with the size, speed, and type of the pump motor and whether the pump is single or three-phase. The minimum run time increases as the size of the motor increases and the number of on/off cycles per hour decreases.
c. Multiple tanks may be used to achieve the total design volume needed.
d. Conventional tanks that provide disinfection contact time shall be designed to meet requirements for inactivation of the appropriate pathogenic organism depending on whether the system source is groundwater, groundwater under the direct influence of surface water or surface water. Detention time for disinfection is provided by the useable volume of water in the tank times a baffle factor depending on how the influent and effluent lines are piped. Guidance is provided by the *Guidance Manual for Surface Water System Treatment Requirements*, the *Missouri Guidance Manual for Inactivation of Viruses in Groundwater*, and 10 CSR 60-4.055 Disinfection Requirements.
e. Conventional tanks with a common inlet and outlet will not be given any credit for chlorine contact time.

7.4.3. Usable Volume

The portion of the tank volume that can be withdrawn between pumping cycles will be referred to hereafter as usable volume. This is sometimes referred to as the drawdown volume or storage capacity. To determine the usable volume in any type of hydropneumatic tank Boyle's Law must be used to determine the Acceptance or Drawdown Factors over the pressure range (cut-in to cut-out pressure) over which the tank is set to operate. The following table provides Drawdown Factors for common pressure ranges.

DRAFT

Table 4 – Acceptance or Drawdown Factors

Maximum System Pressure (cut-out pressure) PSIG	Minimum System Pressure (cut-in pressure) PSIG						
	20	25	30	35	40	45	50
30	0.22	0.11	-	-	-	-	-
35	0.30	0.20	0.10	-	-	-	-
40	0.37	0.27	0.18	0.09	-	-	-
45	0.42	0.34	0.25	0.17	0.08	-	-
50	0.46	0.39	0.31	0.23	0.15	0.08	-
55	0.50	0.43	0.36	0.29	0.22	0.14	0.07
60	0.54	0.47	0.40	0.33	0.27	0.20	0.13
65	0.56	0.50	0.44	0.38	0.31	0.25	0.19
70	0.59	0.53	0.47	0.41	0.35	0.30	0.24

The usable volume is the drawdown factor for the tank pressure range times the gross volume of the tank. For example an 80-gallon tank operates over a range of 40 to 60 PSIG which has a drawdown factor of 0.27. Multiplying 80 gallons by the 0.27 Acceptance Factor gives a usable volume of 21.6 gallons.

7.4.4. Conventional pressure tanks

a. Conventional tanks shall have a water sight glass, a pressure gage, a mechanical means of adding air, a means to adjust the air to water ratio and a pressure blow-off for excess pressure.
b. Conventional tanks shall be equipped with automatic controls to control pressure/water level in the tanks. A means to manage the volume and pressure of air in the air cushion of pressure tanks shall be provided but this may be done manually with portable equipment.
c. There shall be at least one pressure gage in the tank manifold.
d. Conventional tanks with gross volume of 500 gallons or more shall also be designed and constructed with the following appurtenances and features:
    1. Each tank shall have at least one manway with minimum diameter 24-inch clear opening for circular manways. Additional manways should be provided on larger tanks as needed for access and ventilation during painting;
    2. Each tank shall have a drain that shall discharge above the normal ground surface with no direct connection to a sewer or storm drain;
    3. Each tank shall have adequate automatic controls to manage both the water level in the tank and the pressure of the air cushion;

DRAFT

4. Each tank shall be sufficiently housed to protect all appurtenances and the tank from freezing; and
5. Each tank shall be located above the normal ground surface. Tanks shall not be buried or installed in contact with the ground to protect from freezing.

DRAFT

Chapter 8 - Distribution Systems

8.0. Materials.

8.0.1. Standards and materials selection

Pipes and fittings shall conform to the latest edition of the AWWA, ASTM, Plastic Pipe Institute (PPI), or UniBell Plastic Pipe Association standards or recommendations. All pipes, fittings, valves, and fire hydrants shall conform to the latest standards issued by the AWWA and, where applicable, shall be certified by NSF or Underwriters Laboratories for use in drinking water. Special attention shall be given to selecting pipe materials that will protect against both internal and external pipe corrosion.

a. Polyvinyl Chloride (PVC) pipes that are less than four inches in diameter shall meet ASTM Standard D 2241, be at least Class 200, and conform to a dimension ratio no greater than 21.
b. PVC pipes four inches and larger in diameter shall be no less than Class 160 and conform to a dimension ratio no greater than 26. Pipe classified for higher pressures should be used where appropriate.
c. Plastic, fiberglass and ductile iron pipe shall meet the latest applicable ANSI/AWWA Standards.
d. Pipes, fittings, and appurtenances containing more than 0.25% lead calculated by weighted average shall not be used.
e. Fittings shall have at least the same pressure rating as the pipe.
f. Methods to control frequent sudden pressure surges or flow changes shall be provided to prevent fatigue failures of the pipe.

8.0.2. High Density Polyethylene (HDPE) Pipe

The unique properties of HDPE pipe present special design considerations that must be addressed when proposing its installation. The following requirements must be met when proposing the installation of HDPE pipe.

a. Polyethylene's response to temperature change is significant and unique when compared to other traditional pipe materials. Anchored or end restrained pipe such as connections between HDPE pipe and other types of pipe will develop longitudinal stresses or thrust instead of undergoing a change in length. The resulting stress or thrust loads can be significant and the restraining structures must be designed to resist the anticipated loads. The Plastic Pipe Institute technical guidelines for connecting HDPE pipe to other types of pipe shall be used.
b. Poisson effects on HDPE pipe can be significant because Poisson forces are transmitted length to length through the entire HDPE pipe string. HDPE pipe designs must address this issue. Joints or mechanical connections that are inline with HDPE pipe shall be either restrained or otherwise protected against pullout disjointing in accordance with Plastic Pipe Institute guidelines. Snaking pipe in a trench is not effective and is not recommended.

DRAFT

c. Methods to control frequent sudden pressure surges or flow changes shall be provided to prevent fatigue failures of the pipe.
d. Heat fusion joining by butt fusion using certified methods is the preferred method of connecting lengths of HDPE pipe and of installing fittings in HDPE pipe. Any mechanical methods of joining HDPE pipe or of installing fittings shall be specifically designed for use with HDPE pipe.
e. Extrusion or hot gas welding are not substitutes for butt, saddle, or socket fusion and are not to be used to join or repair HDPE pressure pipe or fittings.
f. Scrapes or gouges exceeding 10% of the wall thickness cannot be repaired with extrusion or hot air welding. The damaged sections shall be removed and replaced. Kinked pipe shall not be installed and cannot be repaired. Kinked pipe must be removed and replaced. Broken or damaged fittings cannot be repaired with extrusion or hot air welding. They must be removed and replaced.
g. High density polyethylene plastic (HDPE) pipe shall meet the appropriate ANSI/AWWA standard and working pressure rating for the pipe size, PE code designation, and expected working pressures of the installation.
h. Because of thermal and Poisson forces and other unique properties of HDPE pipe, conventional service saddles and tapping tees are not acceptable for use with HDPE pipe. Only mechanical strap-on saddles that are certified by the manufacturer for use on HDPE pipe shall be approved. Electrofusion saddle, or socket fusion saddles and tapping tees shall meet the Plastic Pipe Institute's recommendations for buried HDPE pressure pipe.
i. Stainless steel pipe stiffeners are required for use with mechanical clamp-on saddles, compression couplings or fittings, repair clamps, retaining ring type restrained joint connections, service saddles and similar bolt-on clamp type installations.
j. Valves shall be installed using butt fusion joining or by mechanical flanged or restrained joints.
k. Anchoring of tees and crosses to prevent their lateral movement shall be included in the design. Consideration should be given to the lateral movement and anchoring of service connections.
l. All water mains should be pressure tested before their construction is accepted. HDPE pipe shall be pressure tested in accordance with the recommended practice of the Plastic Pipe Institute for this pipe. Any fusion joints found leaking must be cut out and redone.

8.0.3. Permeation of pipe walls

In areas that are contaminated with organic chemicals, permeation of organic chemicals into the water system shall be prevented by using non-permeable materials for all portions of the water system including pipe, fittings, service connections, and hydrant leads.

8.0.4. Used materials

Only water mains that have been used previously for conveying potable water may be reused, and must meet the above standards and have been practically restored to their original condition.

DRAFT

8.0.5. Joints

Packing and jointing materials used in the joints of pipe shall conform to the latest edition of the AWWA standards. Pipe having mechanical joints or slip on joints with rubber gaskets is preferred.

8.0.6. Tracer wire or tape

All non-metal pipes shall be installed with tracer wire or tape to facilitate future location of the pipe. However, tracer wire or tape is not a substitute for accurate as-built plans, GIS mapping, or individual fixture records on each extension or modification of a system.

a. Tracer wire shall be included in plans and specifications in sufficient detail to ensure the intended benefit of its installation for the expected life of the pipe for which is installed.
b. Tracer wire shall be designed to withstand buried use and expected soil conditions.
c. All tracer wire or tape for new utility installations shall be tested before acceptance.
d. Detectable warning tape is not a substitute for tracer wire.

8.1. Water Main Design.

8.1.1. Pressure

Water pressures in distribution systems below 20 PSIG are a violation of Missouri Safe Drinking Water Regulation 10 CSR 60-4.080 (9), and the Department considers pressures below 20 PSIG to be an imminent hazard to public health.

a. All water mains shall be sized in accordance with a hydraulic analysis based on flow demands and pressure requirements.
b. Distribution systems shall be designed to maintain at least 35 PSIG normal working pressure at ground level at all points in the distribution system under all conditions of design flow not including fire flow.
c. The Department may consider approving design of a lower working pressure on a case-by-case basis for:
    1. Transmission mains that have no current or anticipated retail or commercial services;
    2. Dedicated pump supply lines from finished storage or for yard piping at treatment plants;
    3. Lines coming from ground storage tanks or reservoirs provided no service connections are installed prior to the point where 35 PSIG pressure can be provided; and
    4. Unplanned and emergency connections or consolidation projects where providing at least 35 PSIG design pressure to the new service area would require major revisions to present infrastructure. No more than 5% of service connections representing the entire service area (current plus proposed) may be under 35 PSIG pressure determined by hydraulic analysis, and no service connection may be designed below 25 PSIG.

DRAFT

d. The distribution system should be designed to provide approximately 60 to 80 PSIG at the normal ground elevation at every point in the distribution system during normal working conditions excluding fire flow.

8.1.2. Diameter

a. The minimum size of a water main for providing fire protection and serving fire hydrants shall be six inches in diameter. Larger mains shall be required, if necessary, to allow withdrawal of the required fire flow while maintaining the minimum residual pressure of 20 PSIG throughout the distribution system.
   1. Lead lines to fire hydrants may be reduced in diameter in lieu of installing throttling valves to control flow. Consideration should be made for future improvements that would allow more flow through the hydrant while maintaining minimum pressure.

b. For public water systems not providing fire protection, no main shall be smaller than two inches in diameter, and should be no smaller than three inches in diameter.

8.1.3. Fire protection

Systems that cannot provide a minimum fire flow of 250 GPM for a duration of two hours are not designed to provide any fire protection. Water mains that are not designed to provide fire protection shall not have fire hydrants connected to them.

See Chapter 7.1.1. of this document for more information on fire protection.

8.1.4. Flushing

The ability to adequately flush all parts of the distribution system is essential in emergencies and for flushing contamination from the water system. Routine flushing is essential to maintaining a safe quality of water in the system. The following requirements shall be met when designing flushing systems.

a. Proposed projects submitted to the Department for review shall include supportive documentation that shows water lines can be adequately flushed while maintaining the minimum required pressures. Each submittal shall be accompanied by a hydraulic analysis that evaluates the proposed extension at average design flows and peak flows, including flushing requirements. This analysis needs to include existing lines back to the nearest storage tank or booster pump station.
b. Flushing devices and valves shall be provided to allow every main in the distribution system to be flushed. Flushing devices should be sized to provide flows that will give a velocity of at least 2.5 ft./sec in the water main being flushed.
c. In order to provide increased reliability of service and reduce head loss, dead ends shall be minimized by making appropriate tie ins whenever practical.
d. Where dead end mains occur, they shall be provided with an approved flushing device.
e. No flushing device shall be directly connected to any sewer.

DRAFT

f. Long runs of transmission mains shall have flushing devices appropriately located so that flushing velocities can be reached and contaminant removal can be achieved with minimal customer impact. Flushing devices on long runs of transmission mains should be located at approximately one mile intervals.
g. Flushing devices shall be sized to provide a maximum flow that does not drop system pressures below 20 PSIG. Throttling valves shall be set on the leads to flushing devices to set the maximum flow of the device so that it will not drop system pressures below 20 PSIG.
h. Flushing devices should be installed at low points of the water main installation, depending on flow rate and pipe profile, where sediment may accumulate.
i. The drainage area where flushing occurs shall be reviewed for possible environmental damage. Clean Water Commission regulations may require de-chlorination of potable water that discharges near streams where aquatic life may be affected.

8.2. Isolation Valves.

The ability to adequately isolate parts of the distribution system is essential in an emergency. Sufficient valves shall be provided on water mains to allow a system to be adequately flushed and so that inconvenience and sanitary hazards to customers will be minimized during repairs. The following requirements shall be met when designing system valves.

a. The weight of the valve shall not be carried by the pipe. Valves shall be provided with proper support, such as crushed stone, concrete pads or a well compacted trench bottom.
b. Where new water mains connect, a valve shall be installed on each branch off of the main line and one on the main line.
c. Where new water mains connect to an existing main, a valve shall be installed on the new line.
d. As a rule of thumb, no more than four valves should require closing to isolate a pipe.
e. At a reducer, a valve should be placed in the smaller pipe within 20 feet of the reducer.
f. In long transmission mains with few branches, valves should be installed at intervals of no greater than one mile.
g.

8.3. Fire Hydrants.

8.3.1. Location and spacing

Hydrants should be provided to meet the classification criteria of the state ISO or local authority. Generally, hydrant spacing may range from 350 to 600 feet, depending on the area being served. Hydrants in partially built-out areas should be spaced not to exceed 500 feet of vehicle travel distance from a building. In un-built areas, fire hydrants should be spaced not more than 1500 feet apart.

8.3.2. Valves and nozzles

Fire hydrants should have a minimum bottom valve size of at least five inches, one 4 ½ inch pumper nozzle, and two 2½ inch nozzles.

DRAFT

8.3.3. Hydrant leads

a. The hydrant lead line (the line from the main to the hydrant) shall be designed to match the ability of the system to supply flows to the fire hydrant that will not reduce pressures anywhere in the system below 20 PSIG when the hydrant is fully opened. Alternatively, a throttling valve may be installed on the lead line to control the flow out of the hydrant.
b. In submittals of plans of record to the Department, the maximum allowable flow for each hydrant shall be stated.
c. Thrust restraint shall be provided for throttling valve so that the hydrant may be removed without shutting down the supply main.
d. When installing hydrants on PVC main, the hydrant lead pipe should be of the same material as the supply main, and a concrete collar should be installed around the hydrant lower barrel to prevent damage to the main in the event that the hydrant is hit during a traffic accident.

8.3.4. Drainage

A gravel pocket or dry well shall be provided unless the natural soils will provide adequate drainage for the hydrant barrel. Hydrant drains shall not be connected to or located within ten feet of sanitary sewers or storm drains.

8.3.5. Color Coding

All fire hydrants shall be flow tested to determine the maximum flow that each hydrant can produce without dropping the system pressures below 20 PSIG. If a throttling mechanism is used, it shall then be set at the maximum flow that will not drop system pressures below 20 PSIG. Depending upon the results of the flow test, the bonnet and nozzle caps of each hydrant should be painted the appropriate color to indicate its flow class in accordance with local fire authority requirements or NFPA standards.

8.3.6. Installation

Installation of fire hydrants shall meet the following requirements.

a. The weight of the hydrant shall not be carried by the pipe. Hydrants, lead valves, fittings, and branch connections shall be provided with proper support, such as crushed stone, concrete pads or a well compacted trench bottom.
b. Drainage shall be provided for dry barrel hydrants. This is generally washed stone extending at least one foot on all sides of the hydrant.
c. Hydrants shall be plumb.
d. The center of a hose outlet shall be not less than 18 inches above final grade and so that the final hydrant installation is compatible with the final grade elevation.
e. As a rule, hydrants are either oriented with the pumper outlet perpendicular to the curb which faces the street, or with the pumper outlet set at a 45-degree angle to the street.
f. Hydrants shall be protected if subject to mechanical damage. The means of protection shall be arranged in a manner that will not interfere with the connection to, or operation of, hydrants.

DRAFT

g. A clearance space of at least three feet (3 ft.) surrounding the hydrant body should be provided around every hydrant.
h. Utility poles, vaults, walls, plants and other landscape materials should be kept outside the hydrant's clearance space.
i. In poor load-bearing soil, special construction such as support collars may be required.

8.4. Air Relief Valves; Valve, Meter and Blow Off Chambers.

8.4.1. Location

At high points in water mains where air can accumulate, provisions shall be made to remove the air by means of manually operated hydrants or air relief valves.

Submergence of an automatic air relief valve is a significant health hazard and a direct cross-connection with unsafe water.

a. Automatic air relief valves shall not be used unless air accumulation is a continuous problem that requires automatic removal.
b. Automatic air relief valves shall not be used in situations where flooding of the manhole or chamber may occur.
c. Automatic air relief valves shall not be installed in locations where the valve vault cannot be adequately drained to prevent flooding of the valve.

8.4.2. Piping

a. The open end of an air relief pipe from automatic valves shall be extended to at least one foot above grade and terminate in a downturned position with the opening covered with an 18-mesh, corrosion resistant screen.
b. The discharge pipe from a manually operated valve shall be capped with a threaded removable cap or plug and should be extended to the top of the pit.
c. Vaults or wells housing automatic air relief valves shall be drained to daylight with drains sized to carry the maximum output of the air relief valve.
d. Bypass lines shall be provided for Pressure Reducing Valves (PRV) on critical lines.
e. Pressure gauges should be located upstream and downstream of PRVs to verify operation.

8.4.3. Chamber drainage

Chambers, pits, or manholes containing valves, blow offs, meters, or other such appurtenances to a distribution system, shall not be connected directly to any storm drain or sanitary sewer, nor shall blow offs or air relief valves be connected directly to any sewer. Such chambers or pits shall be drained to the surface of the ground or provided with sump.

8.4.4. Vaults

Vaults for inline pressure control valves or for large master meter connections between public water systems or to large customers serving many people such as mobile home parks, apartment complexes, nursing homes, factories, and hospitals shall meet all of the requirements detailed in Section 7.0.17 of this document.

DRAFT

Remote read-out equipment should be provided to allow meters to be read without entering the vault.

8.5. Installation of Mains.

8.5.1. Standards

Unless otherwise stated in these standards, specifications shall incorporate the provisions of the AWWA standards, manuals and manufacturers' recommended installation procedures.

8.5.2. Bedding, embedment, and backfill

Bedding is the portion of the trench beneath the pipe and supporting the pipe to its spring line. Embedment is the material placed around the pipe to at least six inches above the top of the pipe. Backfill is the material placed into the trench above the embedment. Water main installation design shall meet the following requirements.

a. Trench construction, bedding, and embedment shall be appropriate for the type and size of the pipe installed.
b. Continuous, firm, stable, and uniform bedding shall be provided in the trench for all buried pipe. The bedding design shall insure that there is full support in the haunches of the pipe and be smooth and free of ridges, hollows, and lumps.
c. Bell holes should be excavated so that only the barrel of the pipe receives bearing from the trench bottom.
d. The weight of metallic fittings shall not be supported by the pipe. Metallic fittings shall be provided with proper support, such as crushed stone, concrete pads or a well compacted trench bottom.
e. Rocks and hard objects larger than one inch diameter found in the trench shall be removed at least four inches below and on each side of the pipe and the trench bottom should be filled with 4 to 6 inches of tamped bedding material.
f. When an unstable sub-grade condition which will provide inadequate pipe support is encountered, an alternative foundation shall be provided such as over digging and backfilling with tamped granular material.
g. The trench shall be kept free from water during pipe installation until the pipe has been installed, embedded and backfilled.
h. If the trench passes over another pipe or previous excavation, the trench bottom shall be filled with granular material and compacted.
i. Blocks shall not be used to change pipe grade or to intermittently support pipe across excavated sections.
j. All bedding and embedment material shall be free from cinders, ashes, refuse, vegetable or organic material, boulders, rocks or stones.
k. Embedment material should be tamped in layers around the pipe, and to a sufficient height above the pipe that the pipe is adequately supported, stabilized, and protected. Shaped beddings perform essentially as well as full-contact embedment with select granular soil and are considered equal to full contact bedding.

DRAFT

l. Bedding normally consists of free flowing material such as gravel, sand, silty sand, or clayey sand. If this material is not used, a chipper should be used on the trencher to prepare the soil removed from the trench as embedment and backfill.
m. Embedment material diameter for plastic pipe shall be no greater than ½ inch for 4-inch diameter pipe, ¾ inch for 6 and 8-inch diameter pipes, and 1-inch for pipe diameters from 10 inches and greater.
n. Sand or other non-acidic granular material shall be used for pipe bedding, embedment and backfill in high traffic areas and under paved roads.
o. Backfill may consist of the excavated material, provided it is free from unsuitable matter such as large lumps of clay, frozen soil, organic material, boulders, or stones larger than 8 inches, or construction debris.
p. Width of trenches shall be at least four inches larger than the pipe's diameter. The minimum clear width of a trench should be the pipe outside diameter plus twelve inches to be wide enough to accommodate the compaction equipment.

8.5.3. Cover

All water mains shall be covered with at least 42 inches of earth or other insulation to prevent freezing. Lesser cover depth may be accepted in certain areas as approved by the Department.

8.5.4. Thrust restraint

Properly installed reaction blocking or thrust restraint shall be provided for each dead end, valve, hydrant, flushing device, bend, T-connection, reducer, wye, cross, or other fitting. Reaction blocking or thrust restraint shall be designed to withstand the specific forces expected in the particular construction conditions. Wooden or steel posts or blocking made of wood or other biodegradable material shall not be used. Pre-cast concrete blocks should not be used. All restraining rods, bolts, and nuts should be stainless steel.

8.5.5. Pressure and leakage testing

All types of installed pipe shall be pressure tested and leakage tested in accordance with the latest edition of AWWA Standards and manuals.

8.5.6. Disinfection

All new, cleaned, or repaired water mains shall be disinfected in accordance with the latest edition of the AWWA Standard. The specifications shall include detailed procedures for the adequate flushing, disinfection, and microbiological testing of all water mains.

8.6. Separation of Water Mains, Sanitary Sewers and Combined Sewers.

When buried water mains are in close proximity to non-potable pipelines, the water mains are vulnerable to contamination that can pose a risk of waterborne disease outbreaks. For example, sewers (sanitary sewer mains and sewage force mains) frequently leak and saturate the surrounding soil with sewage due to structural failure, improperly constructed joints, and/or subsidence or upheaval of the soil encasing the sewer. If a nearby water main is depressurized and no or negative pressure occurs, that situation is a public health hazard. The public health

DRAFT

hazard is compounded if an existing sewer is broken during the installation or repair of the water main. Further, failure of a water main in close proximity to other pipelines may disturb their bedding and cause them to fail. To protect the public health, the following requirements shall be met. These requirements apply to horizontally directionally drilled pipe or pipe installed through other trenchless methods as well as pipe installed by conventional open-cut methods.

8.6.1. General

The following factors should be considered in providing adequate separation:

a. Materials and type of joints for water and sewer pipes;
b. Soil conditions;
c. Service and branch connections into the water main and sewer line;
d. Compensating variations in the horizontal and vertical separations;
e. Space for repair and alterations of water and sewer pipes; and
f. Off-setting of water mains around manholes.

8.6.2. Parallel installation

The water main shall be located at least ten feet horizontally from any existing or proposed line carrying non-potable fluids such as, but not limited to drains, storm sewers, sanitary sewers, combined sewers, sewer service connections, and process waste or product lines. The distance shall be measured edge to edge.

In cases where it is not practical to maintain a ten-foot separation, the Department may allow deviation on a case by case basis, if supported by data from the design engineer. Such deviation may allow installation of the water main closer to a non-potable fluid line, provided that the water main is laid in a separate trench located as far away from the non-potable line as feasible and meets other specific construction requirements. Locating a water main on an undisturbed earth shelf located on one side of the non-potable line is not recommended and requires justification by the engineer and specific case-by-case approval of the Department. In either case, an elevation shall be maintained such that the bottom of the water main is at least 18 inches above the top of the non-potable line while meeting minimum cover requirements.

In areas where the recommended separations cannot be obtained, either the waterline or the non-potable line shall be constructed of mechanical or manufactured restrained joint pipe, fusion welded pipe, or cased in a continuous casing. Casing pipe must be a material that is approved for use as water main. Conventional poured concrete is not an acceptable encasement.

8.6.3. Crossings

Water mains crossing sewers, or any other lines carrying non-potable fluids shall be laid to provide a minimum vertical clear distance of 18 inches between the outside of the water main and the outside of the non-potable pipeline. This shall be the case where the water main is either above or below the non-potable pipeline. 18-inch separation is a structural protection measure to prevent the sewer or water main from settling and breaking the other pipe. At crossings, the full length of water pipe shall be located so both joints will be as far from the non-potable pipeline as possible but in

DRAFT

no case less than ten feet or centered on a 20-foot pipe. In areas where the recommended separations cannot be obtained either the waterline or the non-potable pipeline shall be constructed of mechanical or manufactured restrained joint pipe, fusion welded pipe, or cased in a continuous casing that extends no less than ten feet on both sides of the crossing. Special structural support for the water and sewer pipes may be required. Casing pipe must be a material that is approved for use as water main. Conventional poured concrete is not an acceptable encasement.

8.6.4. Exception

Any exception from the specified separation distances in paragraphs 8.6.2.and 8.6.3. must be submitted to the Department for approval.

8.6.5. Force mains

There shall be at least a ten-foot horizontal separation between water mains and sanitary sewer force mains or other force mains carrying non-potable fluids and they shall be in separate trenches. In areas where the recommended separations cannot be obtained, either the waterline or the non-potable line shall be constructed of mechanical joint pipe or cased in a continuous casing, be constructed of mechanical joint pipe, or be jointless or fusion–welded pipe. Where possible, the waterline shall also be at such an elevation that the bottom of the water main is at least 18 inches above the top of the non-potable line. Casing pipe must be a material that is approved for use as water main. Conventional poured concrete is not an acceptable encasement.

8.6.6. Sewer manholes

No waterline shall be located closer than ten feet to any part of a sanitary or combined sewer manhole. Where the separation cannot be obtained, the waterline shall be constructed of mechanical or manufactured restrained joint pipe, fusion welded pipe, or cased in a continuous casing. Casing pipe must be a material that is approved for use as water main. The full length of water pipe shall be located so both joints will be as far from the manhole as possible, but in no case less than ten feet or centered on a 20-foot pipe. No water pipe shall pass through or come into contact with any part of a sanitary or combined sewer manhole.

8.6.7. Disposal facilities

No water main shall be located closer than 25 feet to any wastewater disposal facility, agricultural waste disposal facility, or landfill. Water mains shall be separated by a minimum of 25 feet from septic tanks and wastewater disposal areas such as cesspools, subsurface disposal fields, pit privies, land application fields, and seepage beds.

DRAFT

8.7. Surface Water Crossings.

Surface water crossings present special problems, whether over or under water. The Department should be consulted before final plans are prepared. Special detail drawings shall be submitted that are scaled and dimensioned to show the approximate bottom of the stream, the approximate elevation of the low and high-water levels, and other topographic features. Mechanical, restrained, or fusion welded joint pipe shall be required in waterways and wet weather streams.

8.7.1. Above water crossings

The pipe shall be adequately supported and anchored, protected from damage and freezing and accessible for repair or replacement.

8.7.2. Underwater crossings

a. Flowing streams and water body crossings five hundred feet or less in length shall have a minimum cover of four feet over the pipe. When crossing water courses greater than 15 feet in width, the following shall be provided:
   1. The pipe shall be of special construction, having flexible watertight joints. Steel or ductile iron ball-joint river pipe shall be used for open cut crossings. Mechanical or restrained joint or fusion welded pipe may be used for open cut crossings, provided it is encased in a welded steel casing. Mechanical or restrained joint or fusion weld pipe shall be used for bored crossings.
   2. Adequate support and anchorage shall be provided on both sides of the stream.
   3. Valves shall be provided at both ends of water crossings so that the section can be isolated for testing or repair; the valves shall be easily accessible and should not be subject to flooding.
   4. The valve closest to the supply source shall be in an accessible location and installed in a vault, manhole, or meter pit sized to allow the installation of leak detection equipment.
   5. Permanent taps shall be provided on each side of the valve within the manhole, vault, or meter pit to allow insertion of a small meter to determine leakage and for sampling purposes.
   6. Bank erosion is a major cause of stream crossing failures, and erosion protection measures such as rip rap have limited success. Stream movement and the history of bank erosion must be considered when choosing the length that the crossing pipe or casing shall extend beyond the upper edge of the stream channel. The stream crossing pipe or casing shall extend at least 15 feet beyond the upper edge of the stream channel on each side of the stream.
   7. Large river crossings such as those crossing the Missouri or Mississippi River require specialized design and shall be considered on a case-by-case basis.

b. For lake, water body, and flood plain crossings greater than 500 feet in length, the design shall consider the ability to access and repair or replace the pipe in these crossings. Consideration shall also be given to the ability to continue service to areas served by the crossing in the event of a submerged leak or pipe break.

DRAFT

1. Submerged portions of pipe crossing proposed lakes shall not be buried when the submerged pipe is greater than 500 feet in length except for the transition from water to land.
2. Steel or ductile iron ball-joint river pipe or fusion welded pipe shall be used under water during normal flow conditions. Mechanical, restrained joint, or fusion welded pipe shall be used in flood plains.
3. Underwater installations shall be tested for leaks prior to installation.
4. Valves above the high water level shall be provided at both ends of water crossings so that the section can be isolated for testing or repair.
5. The valve closest to the supply source shall be in an accessible location and installed in a vault, manhole, or meter pit sized to allow the installation of leak detection equipment.
6. Permanent taps shall be provided on each side of the valve within the manhole, vault, or meter pit to allow insertion of a small meter to determine leakage and for sampling purposes.

c. Intermittent flowing streams.
   1. Restrained joint or thermal welded pipe shall be used for all stream crossings.
   2. The pipe shall extend at least 15 feet beyond the upper edge of the stream channel on each side of the stream.
   3. Adequate support and anchorage shall be provided on both sides of the waterway.

8.8. Backflow Prevention.

The water system must be protected from introduction of contaminants by backflow in accordance with 10 CSR 60-11.010 Prevention of Backflow.

8.9. Water Services and Plumbing.

8.9.1. Plumbing

a. Water services and plumbing shall conform to the applicable local plumbing codes. Pipes and pipe fittings containing more than a weighted average of 0.25% lead shall not be used.
b. Solders and flux containing more than 0.2% lead shall not be used.
c. Plumbing fittings and fixtures not in compliance with standards established in accordance 42 U.S.C. 300g-6(e) shall not be used.

8.9.2. Booster pumps

See Chapter 6 of this document.

8.11. Water Loading Stations.

Water loading stations present special problems since the fill line may be used for filling both potable water vessels and other tanks or contaminated vessels. To prevent contamination of both the public supply and potable water vessels being filled, the following requirements shall be met in the design of water loading stations.

DRAFT

8.11.1. Backflow

An appropriate backflow prevention arrangement shall be incorporated in the piping so there is no backflow to the public water supply.

8.11.2. Filling device

A filling device shall be used so the hose does not extend into the water vessel to prevent contaminants being transferred from a hauling vessel to others subsequently using the station.

8.11.3. Hose length

Hoses shall be short enough that they do not contact the ground or any constructed platform. Hanging brackets or rope and pulley hoist is acceptable.

DRAFT

Chapter 9 – Exceptions and Appeals

9.1. General.

Deviation from the mandatory "shall" or "must" requirements will be considered by the Department based on the primary purpose of the proposed water works, the local conditions governing their functions, and operation.

In many instances in this document, exceptions are built-in. For example, general language is used where practical to account for a wide range of options (~~i.~~e.g., section 5.1.4.a. "positive displacement pumps"), or design alternatives are presented (~~i.~~e.g., section 1.1.2.d.) for meeting a requirement.

~~Specific~~The Department will consider specific exceptions ~~can be considered~~ upon request by ~~the Department by~~ submitting Form 780-0000. In no case shall an exception be approved if granting such poses a proven public health risk. Reasons for a request for exception may include, but are not limited to, the following:

a. The proposal provides equivalent or superior proven performance;
b. New technology is available (See section 1.1.7.); or
c. Excessive cost of construction relating to the necessity for upgrading existing infrastructure that is within its design life.

~~A~~The Department will approve or deny an exception ~~will be approved or denied~~ based on justification and supporting documentation provided by the applicant and the engineer. Decisions may be subject to past experience, risk based analysis and the applicant's prior history of compliance.

9.2. Procedures.

Exceptions can be submitted at any time in the permitting process prior to permit approval. However, costs to the applicant may be minimized by obtaining appropriate permissions with an engineering report submittal prior to developing plans and specifications.

Two copies of the exception request Form 780-0000 shall be completed by the applicant or consulting engineer and submitted to the Public Drinking Water Branch at the following address:

Missouri Department of Natural Resources
Public Drinking Water Branch
1101 Riverside Drive
P.O. Box 176
Jefferson City, Missouri 65102-0176
Attn: Permits and Engineering

The application must be filled out completely and signed by the owner, president or governmental official in addition to being signed and sealed by the consulting engineer.

~~9.3. Application Form Instructions.~~

~~The following instructions apply to the box containing the corresponding reference number.~~

DRAFT

1. ~~System Classification: Check the appropriate system type. The system classification can be determined by contacting the Department, at the Regional office, the Jefferson City office or by looking up the system information on the Department's Drinking Water Watch website (C = Community, NTNC = Non-Transient Non-Community, NC = Transient Non-Community). Regional and Jefferson City office contacts are included at the end of these instructions.~~
2. ~~Date: Date of the application.~~
3. ~~Name of Water System: List the water system name, or name of the Continuing Operating Authority if different.~~
4. ~~County: List the county in which the system is located.~~
5. ~~PWS ID Number: The system ID number can also be obtained by contacting the Department or using the Drinking Water Watch website, listed above.~~
6. ~~Type of Construction: Check the appropriate construction category that applies to the exception request.~~
7. ~~Rule Reference: If a state or federal rule has been passed during the effective period of these standards that affects the applicability of a requirement, cite the statute or rule reference.~~
8. ~~Design Standard Reference: Using the published document "Design Standards for Missouri Public Water Systems", cite the chapter and section reference from which the exception request deviates, as applicable. Copies of the document is available upon request by calling Infrastructure Permits and Engineering Section at 573-751-5331 or on the Missouri Department of Natural Resources web site.~~
9. ~~Description of Exception Request: Provide a detailed description of the requested exception including specific construction.~~
10. ~~Consulting Engineer's Explanation: Provide detailed rationale, technical justification, and references when used for the requested deviation from the design standards. Discussion shall include discussion of capital and long-term cost, operation, infrastructure and long-term sustainability. This discussion should include life-cycle costs, level of service differences and operational differences in proposed construction versus construction in accordance with design standards. The justification should also include a discussion of past and present system planning for required future upgrades. If more space is needed, a separate page may be attached as necessary.~~
11. ~~Affirmation: The consulting engineer must provide his name, signature and professional seal indicating professional agreement with factual statements provided for the request, agreement with the system need for the request, and verification that the exception is protective of human health and the environment. The Applicant (the owner, president or governmental official of the system) must provide his name and signature indicating agreement with the request.~~
12. ~~The remainder of the form is for DNR use only.~~

DRAFT

9.4. Appeals.

While the review of most project and construction documents proceeds in a relatively innocuous manner, culminating in an approval being issued, there are times when the PDWB staff engineer and the water system or its consultant may be unable to reconcile a difference. The water system owner/operator may pursue a formal appeal of the Department's decision to the Safe Drinking Water Commission, through the authority provided affected parties in section 640.010.1, RSMo; ~~h~~

However, the PDWB recommends that the following dispute resolution process be followed prior to resorting to formal procedures:

a. If the PDWB staff engineer determines that the proposed design does not meet regulatory criteria or acceptable engineering practices as established in this document, the PDWB staff engineer will explain, in writing, the basis for the decision.
b. If the system or its design engineer or consulting engineer disagrees with the PDWB staff engineer's written conclusion, the design or project engineer must submit the basis of their disagreement, in writing, to the PDWB staff engineer.
c. The PDWB staff engineer will share the information submitted by the design or project engineer with management and peers in the PDWB and solicit their opinions regarding the design or project engineer's response.
d. If, after management review and response, the applicant is still unsatisfied with the decision then a request may be submitted for determination from the department's supervisory registered professional engineer for a final disposition of the Department's comments. Under RSMo 640.018.3, the supervisory engineer must make a preliminary decision within 15 days and a final determination within 30 days of such request.
e. If the water system's owner/operator or consulting engineer remains in disagreement with the Department's position, a formal appeal process could be initiated, as applicable, under the authority provided in section 640.010.1 and 621.250, RSMo.

DRAFT

~~This page intentionally left blank~~

DRAFT

Appendices

All information ~~and example documents~~ in the Appendices ~~are~~is provided for convenience and informational purposes only. ~~This information is subject to change without formal rulemaking.~~

DRAFT

This page intentionally left blank

DRAFT

Appendix A: Construction Planning and Procedures

A.1. ~~Construction~~Typical procedures for proposed new public water supply system

All Public Water Systems are required to obtain written approval from the Department prior to construction. Non-transient non-community Public Water Systems receive approval via construction permit approval. Transient non-community water systems (convenience stores, restaurants, campgrounds) generally receive approval via written authorization, but in some cases may be required to obtain a construction permit.

a. Design and Construction planning:

1. Contact the Department's Water Resources Center and obtain a casing depth for all wells to serve the proposed development. A casing point request Form 780-1426 can be downloaded from the Department's web site.

   ~~Non-community water systems:~~ Contact your local DNR regional office and request a Field Survey of the proposed well site. Water Resources will not issue a casing point without notification from the regional office the project is approved for construction.

2. All proposed systems must ensure that a higher preference public water system does not exist, is not available, or has provided a statement from the existing system waiving its preferential status ~~[~~as required by Public Drinking Water Regulation 10 CSR 60-3.020(6~~)]~~). If the new water system is within the boundaries of an existing public water supply, you must obtain a waiver from that public water system to construct a new water system within their boundaries. For all non-community water systems, connection to an existing approved system shall be given primary consideration.

3. Non-transient ~~Non-community~~ systems: Submit an engineering report, plans and specifications with an application for a construction permit, to the Public Drinking Water Branch, for review and approval. These are to be submitted in duplicate, and affixed with the seal of an engineer registered in Missouri on both sets [10 CSR 60-10.010, and 10 CSR 60-3.010]. A written approval of the engineering report must be obtained (the construction permit) before construction plans and specifications are finalized [10 CSR 60-10.010 (1)(A)].

   Transient ~~non-community water~~ systems: Contact the Public Drinking Water Branch to determine if a construction permit and engineering plans are required.

4. Non-transient ~~Non-community~~ systems: As part of the permit application submit documentation that a Continuing Operating Authority exists, that will serve as the operating authority for the management, operation, replacement, maintenance and modernization of the water system [10 CSR 60-3.020]. Also required is documentation that the water system will meet the minimum technical, managerial, and financial (TMF) capacity requirements as required

DRAFT

in 10 CSR 60-3.020. The Department will not issue a written construction authorization until it determines that the proposed water system meets these requirements. The Public Drinking Water Branch review engineers will request any missing documentation. Incomplete submissions therefore will result in delays in obtaining a permit.

b. After the Construction Permit is issued:

1. At least forty-eight (48) hours prior to grouting the well casing, the regional office ~~is to~~must be notified so that a Department representative can be available to witness the well grout. The grouting method must be the Halliburton Method or approved equivalent. Regional office map and contact information is available in Appendix A.
2. Upon completion of the project, submit two copies of As Built Plans and Specifications, with the seal of the engineer affixed to the affidavit and the as built plans and specifications, along with the engineer's "Statement of Work Completed". [10 CSR 60-10.010(5)(B)]
3. After completing the above, the regional office ~~(RO)~~ will send a staff member to inspect the completed facility.
4. The regional office staff will provide the facility with an application for a Permit to Dispense Water, and information on developing a Sampling Site Plan. A Sampling Site Plan is required for all water systems, and is a written plan for the collection of the monthly bacteriological samples [10 CSR 60-4.020(1)(A)].
5. Submit the application for the Permit to Dispense Water, along with the Emergency Operating Plan and the Sampling Site Plan. Upon approval, the Regional Office staff will send the send the application to the Public Drinking Water Branch for issuance of the Permit to Dispense Water.

DRAFT

Appendix B: Department Offices as of Date of Publication

MISSOURI DEPARTMENT OF NATURAL RESOURCES
REGIONAL AND SATELLITE OFFICES

Kansas City Area

Kansas City Regional Office
500 NE Colbern Rd.
Lee's Summit, MO 64086-4710
816-622-7000
FAX: 816-622-7044

Northwest Missouri Satellite Office
Northwest Missouri State University
Environmental Services Building,
800 University Dr.
Maryville, MO 64468-6015
660-562-1876 or 660-562-1877
FAX: 660-562-1878

Truman Lake Satellite Office
Harry S Truman State Park
28761 State Park Road West
Warsaw, MO 65355
660-438-3039
FAX: 660-438-5271

Southwest Area

Southwest Regional Office
2040 W. Woodland
Springfield, MO 65807-5912
417-891-4300
FAX: 417-891-4399

Lake of the Ozarks Satellite Office
Camden County, 5570 Hwy. 54,
Osage Beach, MO 65065
2040 W. Woodland
Springfield, MO 65807-5912
573-348-2442
FAX: 573-348-2568

Newton County Satellite Office
Crowder College
601 Laclede, Smith Hall, Room 201
Neosho, MO 64850
417-455-5180 or 417-455-5158
FAX: 417-455-5157

Northeast Area

Northeast Regional Office
1709 Prospect Drive
Macon, MO 63552-2602
660-385-8000
FAX: 660-385-8090

Boonville Satellite Office
320 First St.
Boonville, MO 65233
660-882-1540
FAX: 660-882-1544

Kirksville Satellite Office
Truman State University
Magruder Hall, Room 3068
100 E. Normal St.
Kirksville, MO 63501
660-785-4610

Department Central Offices
P.O. Box 176
Jefferson City, MO 65102-0176
573-751-3443
www.dnr.mo.gov/shared/map-jeffcity.htm

St. Louis Area

St. Louis Regional Office
7545 S. Lindbergh, Ste 210
St. Louis, MO 63125
314-416-2960
FAX: 314-416-2970

Franklin County Satellite Office
Meramec State Park
Hwy. 185 S.
Sullivan, MO 63080
573-860-4308
FAX: 573-468-5051

Jefferson County Satellite Office
Eastern District Parks Office
Hwy. 61
Festus, MO 63028
636-931-5200
FAX: 636-931-5204

Lincoln County Satellite Office
Cuivre River State Park
678 State Rt. 147
Troy, MO 63379
636-528-4779
FAX: 636-528-5817

Southeast Area

Southeast Regional Office
2155 North Westwood Blvd.
Poplar Bluff, MO 63901
573-840-9750
FAX: 573-840-9754

Cape Girardeau County Satellite Office
2007 Southern Expressway
Cape Girardeau, MO 63701
573-651-3008 (phone and FAX)

Delta Center Satellite Office
P.O. Box 160
Portageville, MO 63873
573-379-5431
FAX: 573-379-5875

Howell County Satellite Office
700 W. Main St.
Willow Springs, MO 65793
417-469-0025 (phone and FAX)

Madison County Satellite Office
120 W. Main St.
Fredericktown, MO 63645
573-783-2385
FAX: 573-783-6294

Rolla Satellite Office
111 Fairgrounds Rd.
Rolla, MO 65402
573-368-3625
FAX: 573-368-3912

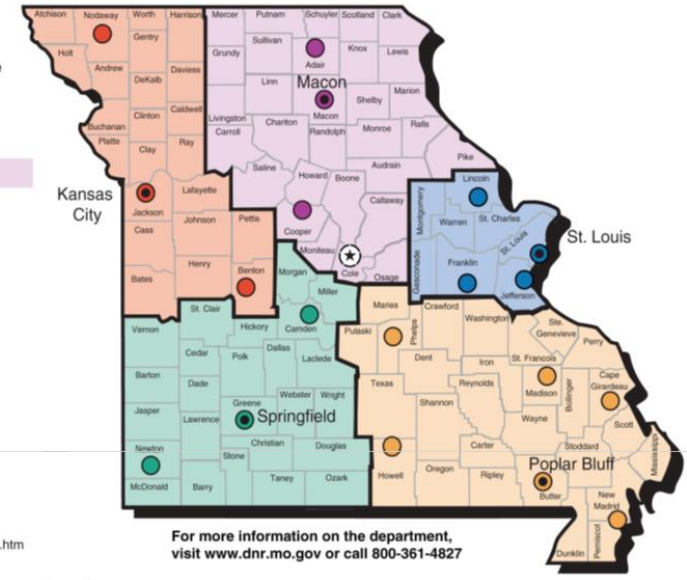

For more information on the department, visit www.dnr.mo.gov or call 800-361-4827

12/2010 www.dnr.mo.gov/regions/ro-map-color.pdf

This page intentionally left blank

DRAFT

Appendix C: Typical Procedures for Obtaining a Permit to Dispense Water to the Public

a. For a non-transient ~~non-community~~ public water supply to obtain a permit to dispense water:
   1. Comply with the requirements of 10 CSR 60-10.010, ~~(this~~which requires the developer to submit engineering plans and specifications for review and approval and obtain a construction permit before any construction begins~~);~~;
   2. Present evidence of the ability to produce water meeting applicable maximum contaminant levels;
   3. Present evidence of reliable water system operation, consistent with the type of treatment and degree of automatic control provided; and
   4. Provide proof of Continuing Operating Authority (as per 10 CSR 60-3.020)
   5. Meet the technical, managerial and financial capacity requirements of 10 CSR 60-3.030.

b. For a transient ~~non-community~~ public water supply to obtain a permit to dispense water:
   1. Present evidence of the ability to produce water meeting applicable maximum contaminant levels;
   2. Present evidence of reliable water system operation, consistent with the type of treatment and degree of automatic control provided;
   3. Provide proof of Continuing Operating Authority (as per 10 CSR 60-3.020)
   4. System must be constructed in accordance with all applicable state and federal regulations;
   5. System must file with the Department a record of construction for all new or modified wells on forms provided by the Department; and
   6. Systems utilizing surface or ground water under the direct influence of surface water must obtain written authorization from the Department prior to construction, alteration or extension of the system and must meet the technical, managerial and financial capacity requirements of 10 CSR 60-3.030.

c. ~~Non-community water systems must develop~~Develop a Sampling Site Plan for the collection of the monthly bacteriological samples per 10 CSR 60-4.020(1)(A).

d. ~~Non-community water systems must submit~~Submit an application to the Department for a Permit to Dispense Water to the Public with all applicable documentation as listed on the application.

DRAFT

Appendix D: Well Drillers Example Forms and Information

DRAFT

D.1. Survey of pressure grout sealing of well casing

Legal Description: Owner of Well: _____

____1/4, ____1/4, ____1/4, Location: _____

Sec. ____, T ____, R _____ (If municipal well, designate by number)

County _____

Total well depth: _____ Casing depth: _____ Casing joints (collar or weld): _____

Diam. of drill hole to casing point: _____ Diam. of drill hole below casing point: _____

Inside diameter of casing: _____ Outside diameter of casing: _____

Casing weight per foot: _____ Length and diameter of surface casing: _____

Static water level before sealing: _____ Static water level after sealing: _____

Was water circulated before cement grout was introduced? _____

Were crevices encountered that prevented or interfered with grouting? ____ Depth(s): _____

Was any prepared compound pumped into the well to obtain circulation? _____

Material used: _____ Amount: _____

Was cement grout forced upward from bottom of casing to ground surface? _____

If not, to what elevation? _____ Who determined elevation? _____

What was the maximum pressure exerted on cement grout? _____

Total amt of cement used: _____ Amt forced upward from bottom of casing: ____

Amount introduced from top of ground: _____

How many hours was cement grout permitted to set before plug was drilled out? _____

Name of drilling contractor: _____

Name of cementing contractor: _____

Date of cementing casing _____

Give brief narrative of cementing operation, including difficulties encountered:

_____

_____

_____

_____

_____

_____

cc: Drinking Water Branch
Water Resources Center

_____ Reported by: _____

_____ Date: _____

DRAFT

D.2. Important points to consider when conducting a pumping test

1. Do not begin pumping test until water level has stabilized and can really be considered static.
2. Measure the pumping rate using an accurate rate-of-flow meter, venturi meter, or by using a calibrated orifice plate and manometer.
3. Measure the water level in the well and in any observation wells as accurately as possible using an electronic water-level indicator, pressure transducer, air-line & pressure gauge, or other device capable of accurately measuring depth-to-water in the well.
4. Limit the discharge rate to within plus or minus five percent (5%) of the target rate for constant rate and step-continuous composite method, and maintain a 5% step rate for the variable method. Tests will not produce acceptable results if deviations exceed these limits and will require retesting. Note any deviations in the "remarks" column. Measure pumping rate every time a water level is taken if possible.
5. If the pump test is stopped, do not begin again until water level has recovered to static.
6. Do not end pump test before 24 hours have expired unless drawdown has stabilized for several hours.
7. Additional information regarding pump tests can be found in section 3.2.4. of this document

DRAFT

D.3. Well Labeling Diagram

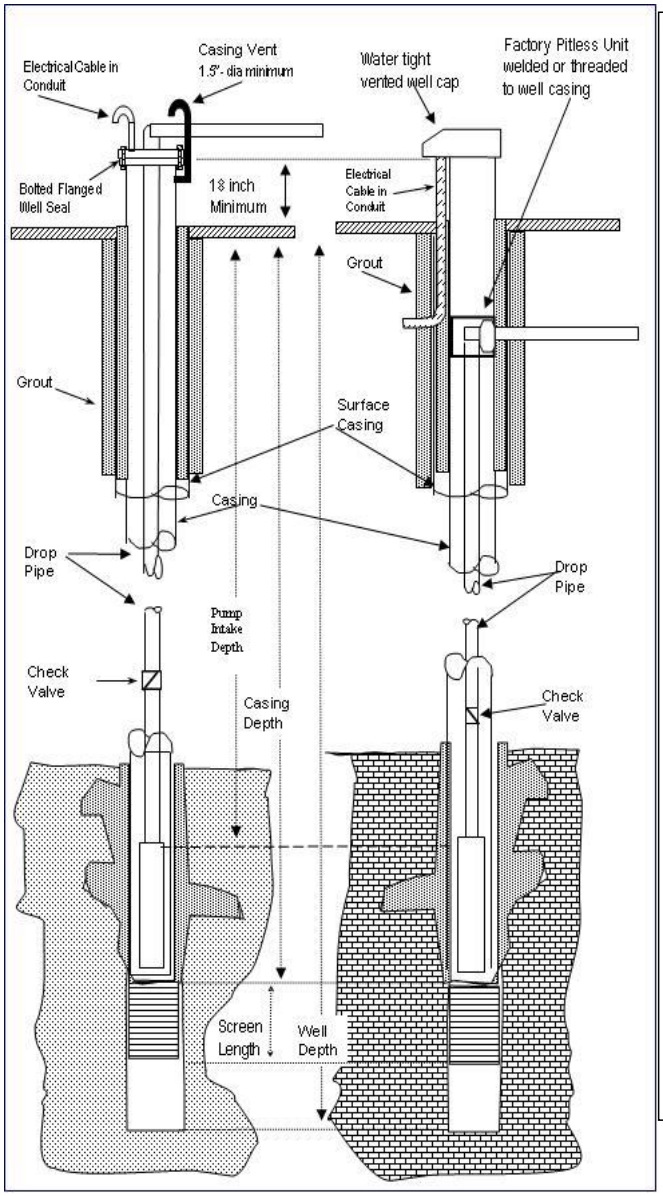

Water Well Details

Name: _____

PWS ID No _____

County _____

Well ID No. _____

Well Development Information

Well Diameter: ____ Depth _____

Aquifer Name: _____

SURFACE CASING Material _____

Diameter ____ Depth: _____

PRIMARY CASING: Material _____

Diameter ____ Depth: _____

DROP PIPE (RISER PIPE)

Material _____ Diameter _____

Check Valve(s) Yes __ No __ Number ___

ELECTRICAL

Volts _____ Hertz ____ Phase ____

Lightning Protection: Yes ___ No ___

PUMP

Manufacturer _____

Model _____

Capacity: _____ gpm at _____ TDH

Horsepower: _____ Depth _____

SCREEN (Enter N/A if there is no screen)

Manufacturer/Type: _____

Material: _____

Appendix E: ~~Certified Operator Requirements~~Diagrams – Typical Disinfection layout for Non Community Systems

~~Missouri Safe Drinking Water Regulation 10 CSR 60-14 requires all public water systems employ or contract with a certified operator holding a valid certificate equal to or greater than the classification of the water system. The following information is for informational purposes only and is subject to change.~~

~~Examination applications are available for water treatment and water distribution operators. Form MO 780-1089 "Application for examination for a water treatment, water distribution, wastewater operator or CAFO certificate" can be downloaded directly from our web site. Operators must pass the examination and have actual or equivalent experience for operating a water system of your classification before becoming certified. Table 1 details experience requirements and Table 2 details what is considered equivalent experience for each certificate level.~~

~~The Department does offer training classes to prepare for the exam and gain equivalent experience for the certification. Also, your system may be eligible to receive funding for reimbursement of the cost of training and operator certification fees. Visit the Department's web site for more information.~~

~~If the water system decides to employ a certified chief operator through a contract operator arrangement, a written agreement indicating the responsibilities of the operator must be on file at the water system at all times. Regulation 10 CSR 60-14 requires the written and signed agreement for a contract operator to include, at a minimum, the following information:~~

~~a. **Minimum frequency of routine visits to the water system.** How many times will the contract operator be present at the system? For example, the contractor operator will be present at the water system for at minimum 5 days each week.~~

~~b. **Minimum hours the operator will be present for each routine visit**. How long will the contract operator be present at the system during each routine visit? For example, the contract operator will be present at the water system for at minimum 2 hours during each routine visit.~~

~~c. **Operator's duties and responsibilities**. Specifically, what is the contract operator's required responsibilities under the signed contract? The contract operator must be in responsible charge of the day-to-day process control and system integrity. The contract operator needs to be capable and responsible for decisions regarding the operational activities that will directly impact the quality and quantity of the drinking water.~~

~~For example, the contract operator is required to collect all water quality samples as directed and required by the Department of Natural Resources. Water quality sampling can include, but is not limited to, monthly bacteriological sampling, chlorine residual monitoring at the time of the bacteriological sampling, lead and copper sampling, and sampling requirements as required by the Department of Natural Resources.~~

~~Please be advised that collecting water quality samples is not the only requirement of a certified operator. Insuring the water system is maintained and in working order so that it supplies safe drinking water meeting state and federal regulations and requirements is~~

DRAFT

~~also the responsibility of the certified operator. This can include, but is not limited to, main repairs, development and implementation of an emergency operations plan, checking master meters, monitoring water loss, enforcing back flow and lead ordinances, exercising valves, investigating customer complaints, maintaining pump stations and water towers.~~

~~The duties and responsibilities of the operator need to be specifically identified in the signed contract between the water system and the contracted operator.~~

~~d. Operator certification level required by the Department. The water system needs an operator with a minimum certification as the classification of the water system maintained in good standing with the Department of Natural Resources.~~

~~e. Level of certification held by the contract operator.~~

~~f. Minimum response time for the operator to be at the water system in the event of an emergency.~~

~~g. Number of employees, if any, hired to assist.~~

~~It is important that all of the above items be included in the written and signed contract agreement with your contract operator. A contract operator would take on all of the responsibilities of a chief operator for the water system. These responsibilities would need to include day-to-day process control/system integrity decisions regarding operational activities that will directly impact the quality and quantity of the drinking water.~~

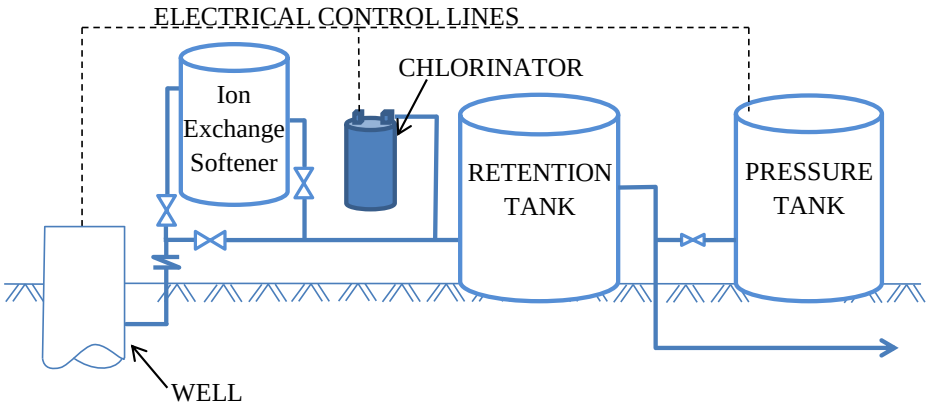

Figure E-1. Typical chlorination location with Ion Exchange Softening

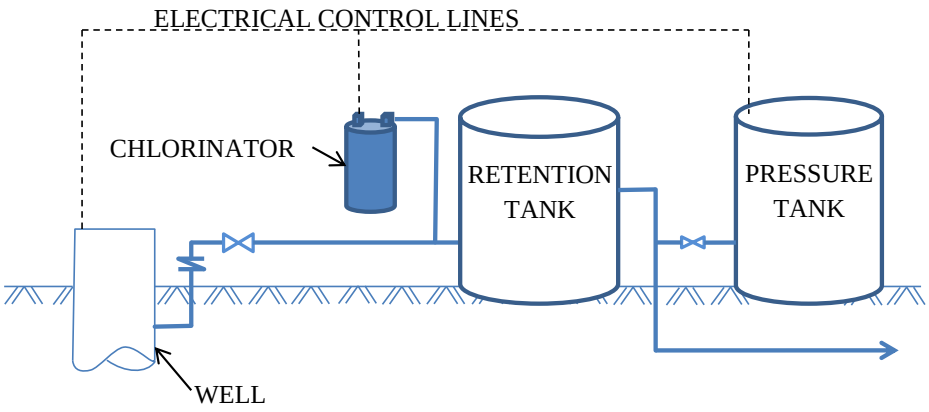

Figure E-2. Typical chlorination location without Ion Exchange Softening

Formatted: Line spacing: Multiple 1.15 li

DRAFT

Appendix F: Water Use Calculations and Acceptable Tables for Transient Non-community Water Systems

F.1. Peak Flow and example

The Fixture Unit Method of Water Flow Rate and Sizing

In sizing well, pumps and pressure storage for non-community public water systems the peak rate of flow required to serve the facility is needed. One method of determining peak flow is to assign each water appliance with weighted fixture number, add up all of the fixture numbers, and use a formula or chart to estimate peak rate of flow. The first of the following charts provides the weighted fixture number for each type of water fixture. The second chart gives the gallons per minute peak flow based on the total of the fixture units.

Example:

A factory with 50 employees has four restrooms, two executive and two staff restrooms. The men's staff restroom has 3 flushometer water closets, 3 siphon jet urinals, and three lavatories. The women's restroom has 3 flushometer water closets and three lavatories. The men's and women's executive restrooms each have one tank type water closet and one lavatory. In addition to the restrooms, the executive break room has a kitchen sink, dishwasher, and a coffee maker. The staff break room has a kitchen sink. The factory has five ¾-inch wall hydrants, two service sinks, five drinking fountains, and four ¾-inch exterior hose bibs.

Using Table F-1:

6 flushometer water closets times 4 units per flushometer equals 24 units
3 siphon jet urinals @ 4 units equals 12 units
7 lavatories @ 1 unit equals 7 units
5 drinking fountains @ 0.25 units equals 1.25 units
2 tank type water closets @ 3 units equals 6 units
2 kitchen sinks @ 3 units equals 6 units
1 coffee maker @ 0.5 units equals 0.5 units
1 dishwasher @ 1 unit equals 1 unit
2 service sinks @ 3 units equals 6 units
5 wall hydrants, ¾ inch @ 4 units equals 20 units
4 exterior hose bibs, ¾ inch @ 4 units equals 16 units

Formatted: Indent: Left: 0.5"

The sum of units equal 83.75 or 84 units

Using the Table F.3. for predominately flushometer and siphon jet fixtures the peak gallon per minute flow (GPM) is between 62 and 65 GPM. Use 65 GPM to be conservative. This means that the combination of the well pump and the pressure tanks for a simple well system must provide a flow of 65 GPM over the peak flow period. The peak flow period is determined by the number of starts per hour that the well pump is allowed. If a well pump can withstand 6 starts per hour the peak period is 10 minutes. If a well pump can withstand 4 starts per hour the peak period is 15 minutes. If the well pump has a capacity of 25 GPM then the pressure tanks must provide the difference (65 GPM – 25 GPM = 40 GPM) over the peak

DRAFT

flow period. If a peak period of 10 minutes is required then the tanks must provide 400 gallons of usable storage to meet peak demands. Table 8 in Section 7.4.3 must be used to determine the size of tank or tanks that will provide 400 gallons of usable storage. If a pressure range of 40 to 60 psi is used the drawdown factor is 0.27 and the total volume is 400 gallons divided by 0.27 or roughly 1500 gallons. If a larger well pump is provided, a smaller pressure tank or fewer tanks can be used.

Table F-1. Water Supply Fixture Units for Public Use Fixtures

Type of Fixture	Water Supply Fixture Units
Automatic clothes washer, individual	3.0
Automatic clothes washer, large capacity	a
Bathtub with or without shower head	3.0
Coffeemaker	0.5
Dishwasher, commercial	b
Dishwasher, individual	1.0
Drink dispenser	0.5
Drinking fountain	0.25
Glass filler	0.5
Hose bib, ½ inch diameter	3.0
Hose bib, ¾ inch diameter	4.0
Icemaker	0.5
Lavatory	1.0
Shower, per head	3.0
Sinks, bar and fountain	2.0
Sinks, barber and shampoo	2.0
Sinks, cup	0.5
Sinks, flushing rim	7.0
Sinks, kitchen and food preparation per faucet	3.0
Sinks, laboratory	1.5
Sinks, medical exam and treatment	1.5
Sinks, service	3.0
Sinks, surgeon wash up	2.0
Urinal, siphon jet	4.0
Urinal, wash down	2.0
Wall hydrant, ½ inch diameter	3.0
Wall hydrant, ¾ inch diameter	4.0
Wash fountain, semicircular	2.0
Wash fountain, circular	3.0
Water closet, flushometer	7.0
Water closet, gravity type flush tank	3.0

a. Commercial laundry service is based on the capacity and number of the washing machines as shown in the following table. The peak gallon per minute flow rate is 10% multiplied by the capacity of the machine in pounds.
b. For commercial dish washers, gallons per minute flow must be based on the manufacturer's recommendations.

DRAFT

Table F-2 Commercial Laundry Capacity Table

Tumbler Size inches	Clothes Capacity lbs.	Tumbler Size inches	Clothes Capacity lbs.	Tumbler Size inches	Clothes Capacity lbs.	Tumbler Size inches	Clothes Capacity lbs.
30 X 60	25	36 X 42	125	42 X 96	400	44 X 126	575
24 X 36	48	36 X 54	165	42 X 108	450	48 X 48	460
30 X 30	60	42 X 42	175	42 X 126	510	48 X 96	535
30 X 36	70	42 X 48	200	44 X 54	245	48 X 120	680
30 X 42	80	42 X 54	225	44 X 64	300	48 X 126	715
30 X 48	95	42 X 64	265	44 X 72	330	54 X 84	600
63 X 30	90	42 X 72	300	44 X 84	385	54 X 96	680
36 X 36	110	42 X 84	350	44 X 96	440	60 X 96	900

The gallons of water used per cycle for each washing machine is 2.5 multiplied by the capacity of the machine in pounds.

Table F-3 Conversion of Water Supply Fixture Units to Gallons Per Minute (GPM)

WATER SUPPLY FIXTURE UNITS	GALLONS PER MINUTE	
	Predominately Flushometer water closets Siphon jet Urinals	Predominately Flush tank water closets Washdown Urinals
1	-	1
2	-	2
3	-	3
4	10	4
5	15	4.5
6	18	5
7	21	6
8	24	6.5
9	26	7
10	27	8
20	35	14
30	40	20
40	46	24
50	51	28
60	54	32
70	58	35
80	62	38
90	65	41
100	68	42
120	73	48
140	78	53
160	83	57

DRAFT

180	87	61
200	92	65
250	101	75
300	110	85
400	126	105
500	142	125
600	157	143
700	170	161
800	183	178
900	197	195
1000	208	208
1250	240	240
1500	267	267
1750	294	294
2000	321	321
2250	348	348
2500	375	375
2750	402	402
3000	432	432
4000	525	525
5000	593	593

DRAFT