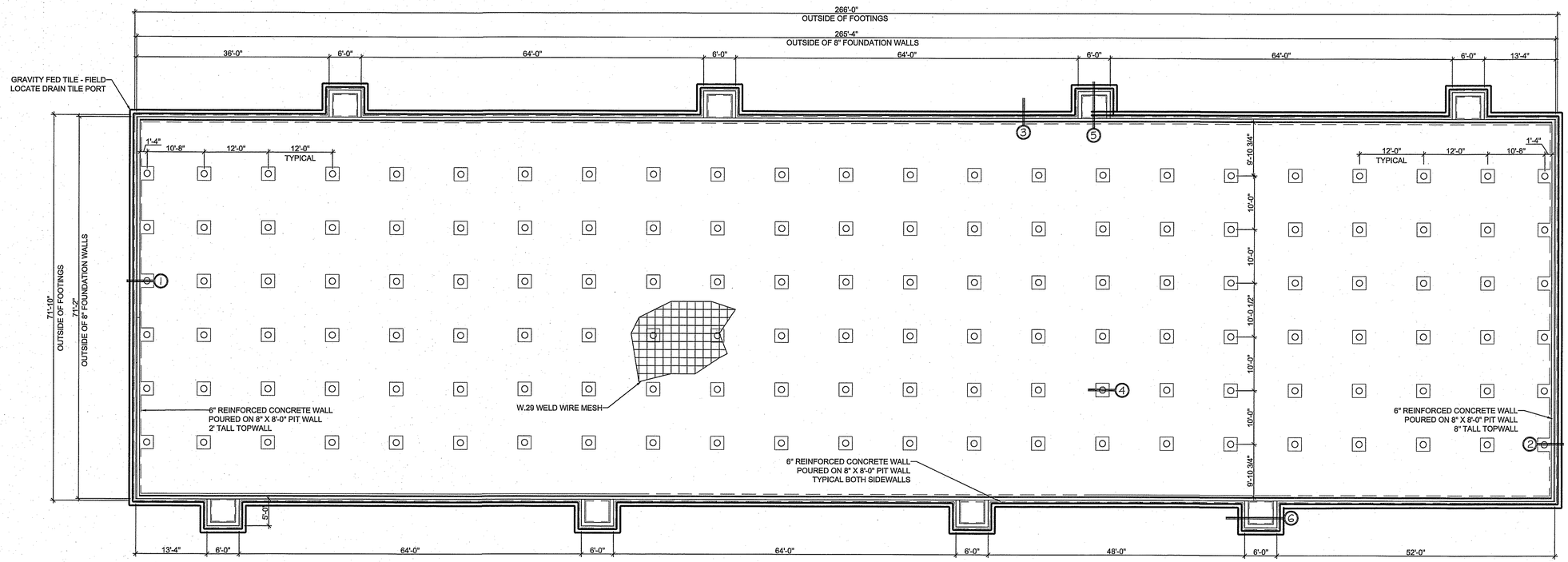

NOTE:

ALL REINFORCED CONCRETE SLATS & BEAMS SHALL BE BUTTED AND OR GROUTED TIGHT THE FULL DEPTH AND WIDTH OF THEM USING 4000 PSI CONCRETE GROUT MIX

NOTES:	NOTES:
REBAR TO HAVE A MINIMUM OF 2" COVER FROM SIDES, TOP, AND BOTTOM OF WALL AND 3" IN FOOTINGS	MAKE PROVISION FOR WATER AND ELECTRICAL ENTRANCES
BACKFILL TO SLAT LEVEL	4" THICK PRECAST SLATS
OVERLAP REBAR 12" MINIMUM AND WELDED WIRE 6" MINIMUM	INSTALL ANCHOR BOLTS AS SHOWN IN DETAIL
ALL REBAR IS ASTM A615 GRADE 60 UNLESS NOTED DIFFERENTLY	LAYOUT OF SIDEWALL ANCHOR BOLTS MUST BE MEASURED FROM THE SAME END OF THE BUILDING
WELDED WIRE IS ASTM A185 GRADE 60	USE STAINLESS STEEL ANCHOR BOLTS ON SIDEWALLS ONLY (PROVIDED BY PSI) REMAINDER OF ANCHOR BOLTS ARE STANDARD STEEL (PROVIDED BY CONCRETE SUB-CONTRACTOR)
ALL CONCRETE TO BE 4000 PSI @ 28 DAYS	

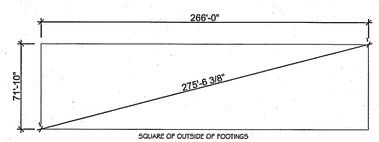

SQUARE OF OUTSIDE OF FOOTINGS

CONSTRUCTION NOTES:

DO NOT ALLOW HEAVY EQUIPMENT WITHIN 5' OF PIT WALLS EXCEPT AT PUMP-OUTS

DESIGN -
STRUCTURAL DESIGN ACCORDING TO MWPS-36
BY MIDWEST PLAN SERVICE, IOWA STATE UNIVERSITY

ANCHOR BOLTS -
ALL ANCHOR BOLTS SHALL BE PLACED IN FRESH CONCRETE AND POSITIONED AS REQUIRED BY FRAMING CONTRACTOR

DRILLED-IN OR WEDGE ANCHORS ARE NOT ALLOWED

EXCAVATION & BACKFILL -
FOOTING ARE DESIGNED FOR MINIMUM SOIL BEARINGS CAPACITY= 3000 LB/SQ FT

CONTRACTOR SHALL OVER EXCAVATE AND PLACE 4 COMPACT SUITABLE FOOTING MATERIAL AS REQUIRED TO ASSURE MINIMUM SOIL BEARING CAPACITY IS ATTAINED.

BACKFILL SHALL BE GRANULAR & FREE DRAINING.
BACKFILL ONLY AFTER PRECAST GANG SLATS ARE PLACED.

REINFORCING STEEL -
FABRICATE AND PLACE IN ACCORDANCE WITH A.C.I. 318-11 STEEL

CONCRETE -
MINIMUM 28 DAY COMPRESSIVE STRENGTH
FOOTINGS & PIT FLOOR 4000 P.S.I.
WALLS & COLUMNS 4000 P.S.I

MIX DESIGN USING FLY ASH SHALL BE CLASS "C" ONLY
MAXIMUM FLY ASH CONTENT 15%

ENTRAINED AIR CONTENT 5% to 7%

MAXIMUM SLUMP 5"

MIX, PLACE, CURE AND PROTECT CONCRETE IN ACCORDANCE WITH A.C.I. 318-11

INSULATE FORMS & COVER CONCRETE AS REQUIRED TO PROTECT FROM TEMPERATURES BELOW 40° F

WATERLINES -
WATER LINES SHALL NOT PENETRATE THE WALL OR FLOOR OF THE LIVESTOCK WASTE HOLDING BASIN FACILITY BELOW SLAT LEVEL.

WATERSTOP -
WATERSTOP SHALL BE INSTALLED IN ACCORDANCE WITH THE MANUFACTURERS RECOMMENDATIONS

PRECISION STRUCTURES INC
1204 1ST AVE NORTH, WELLMAN, IOWA
(319) 646-2430

REVISED

STATE OF MISSOURI
JEFF ERIC BROWNING
NUMBER E-28664
REGISTERED PROFESSIONAL ENGINEER

ALLIED ENGINEERING SERVICES, LLC

Engineering-Surveying-Construction

224 WEST MAIN, P.O. BOX 29
BOWLING GREEN, MO 63334
PHONE: (573) 324-6860

DALE DUNLAP

SHEET TITLE: CONCRETE PLANS AND NOTES

FILE NAME	16-3384
DRAWN BY	TRD
CHECKED BY	TRD
PROJECT ENGINEER	JEB
CONTACT OFFICE	BOWLING GREEN
DATE	7-13-16
JOB NUMBER	16-3384
SHEET NUMBER	1 of 2

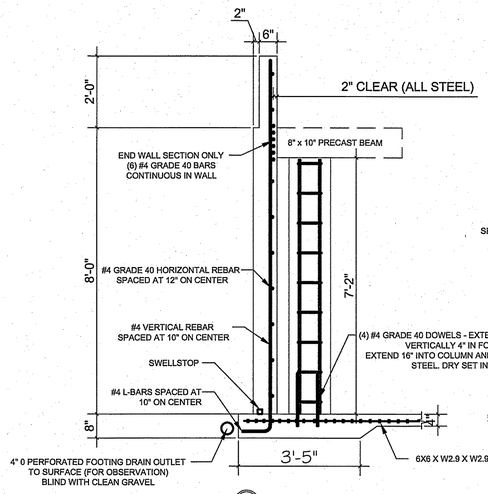

1 WEST ENDWALL DETAIL

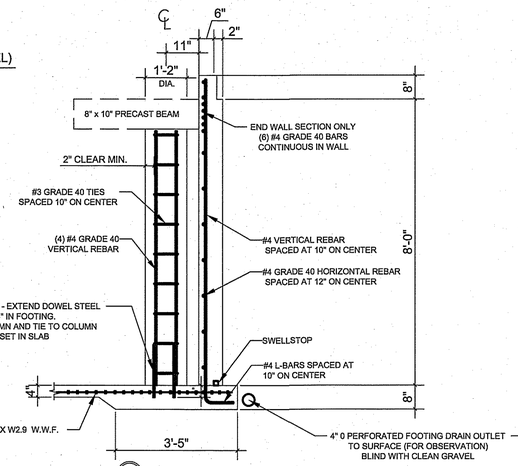

2 EAST ENDWALL DETAIL

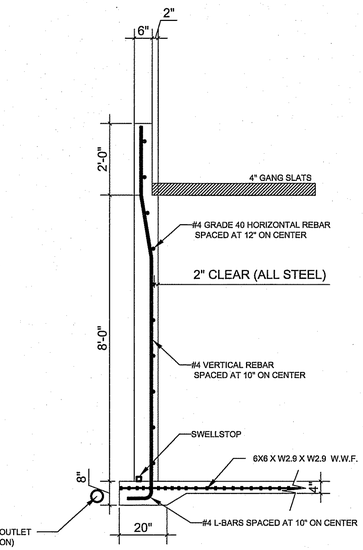

3 SIDEWALL DETAIL

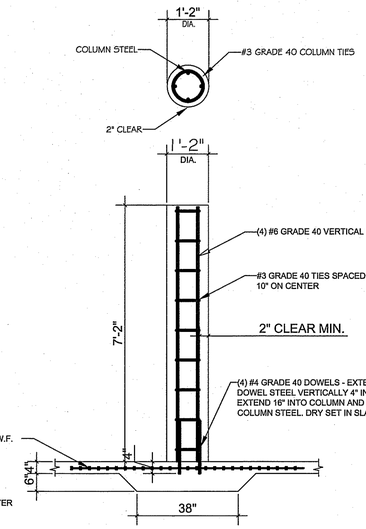

4 COLUMN AND FOOTING DETAIL

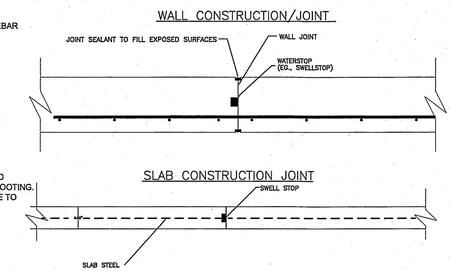

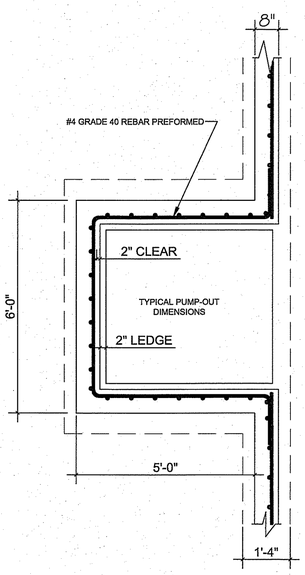

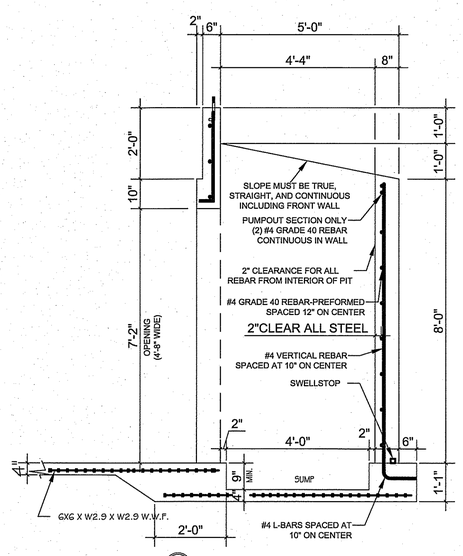

5 PUMP-OUT DETAILS

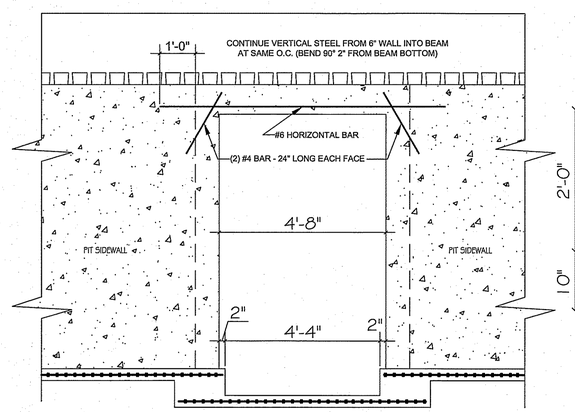

6 PUMP-OUT DETAILS

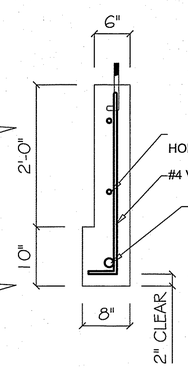

END VIEW PUMP-OUT BEAM
NTS

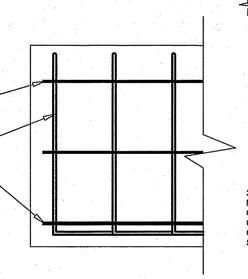

SIDE VIEW PUMP-OUT BEAM
NTS

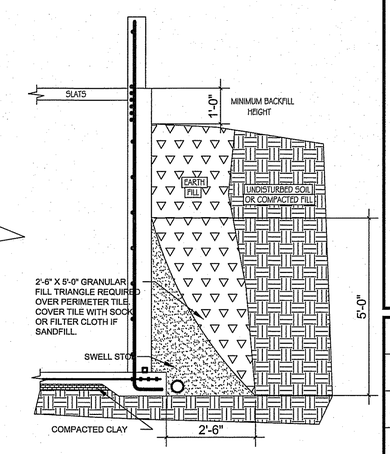

CONCRETE PITWALL BACKFILL DETAIL
NTS

PRECISION STRUCTURES INC
1204 1ST AVE NORTH, WELLMAN, IOWA
(319) 646-2430

REVISED

STATE OF MISSOURI
JEFF ERIC BROWNING
NUMBER E-28664
REGISTERED PROFESSIONAL ENGINEER

ALLIED ENGINEERING SERVICES, LLC
Engineering-Surveying-Construction
224 WEST MAIN, P.O. BOX 29
BOWLING GREEN, MO 63334
PHONE: (573) 324-6860

DALE DUNLAP

SHEET TITLE: CONCRETE DETAILS

FILE NAME	16-3384
DRAWN BY	TRD
CHECKED BY	TRD
PROJECT ENGINEER	JEB
CONTACT OFFICE	BOWLING GREEN
DATE	7-13-16
JOB NUMBER	16-3384
SHEET NUMBER	2 of 2