TREATMENT BUILDING CONSTRUCTION PLANS FOR

BRIDGETON LANDFILL

BRIDGETON, MISSOURI

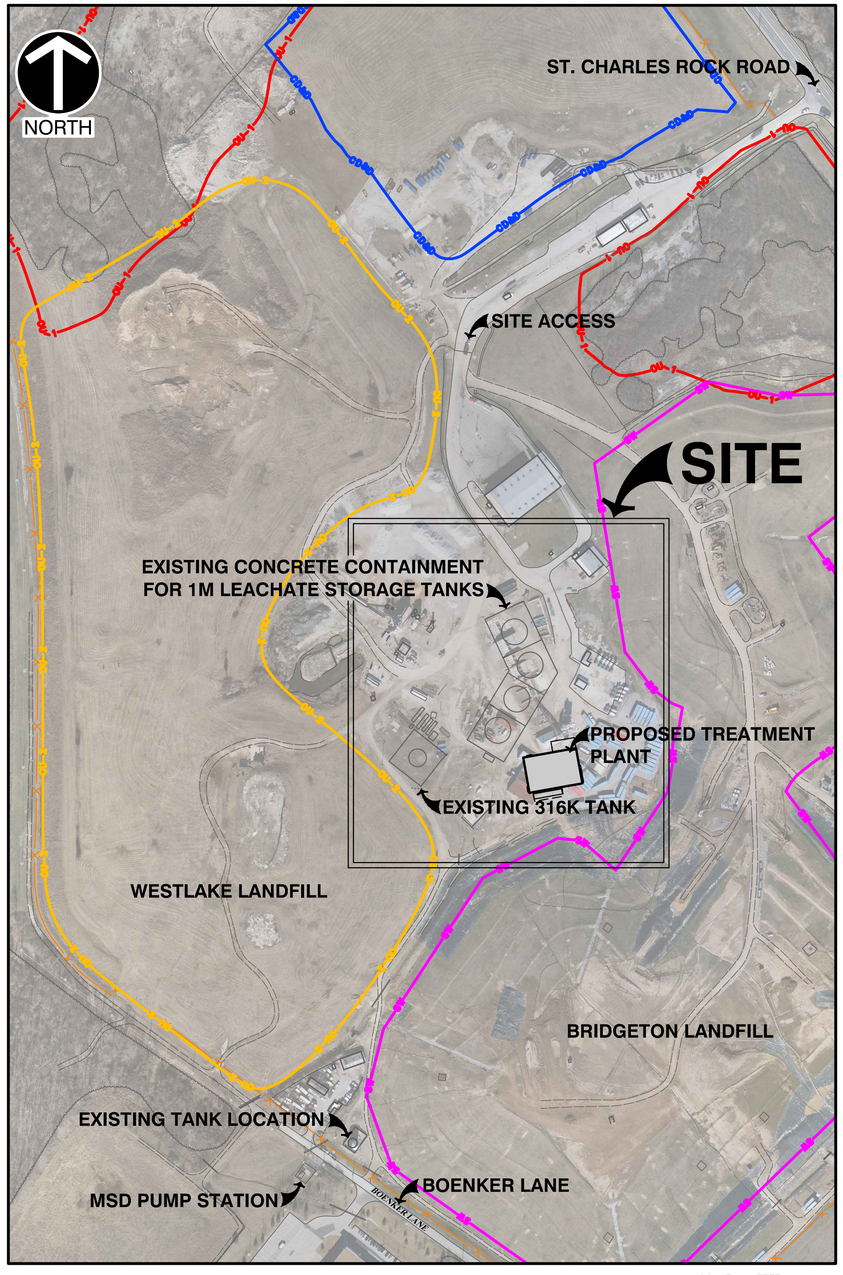

SCALE IN FEET
0 200 400

REFERENCE

1. AERIAL IMAGERY PROVIDED BY EAST WEST GATEWAY COORDINATING COUNCIL OF MISSOURI AND ILLINOIS, COLLECTED IN LATE FEBRUARY AND EARLY MARCH OF 2012.

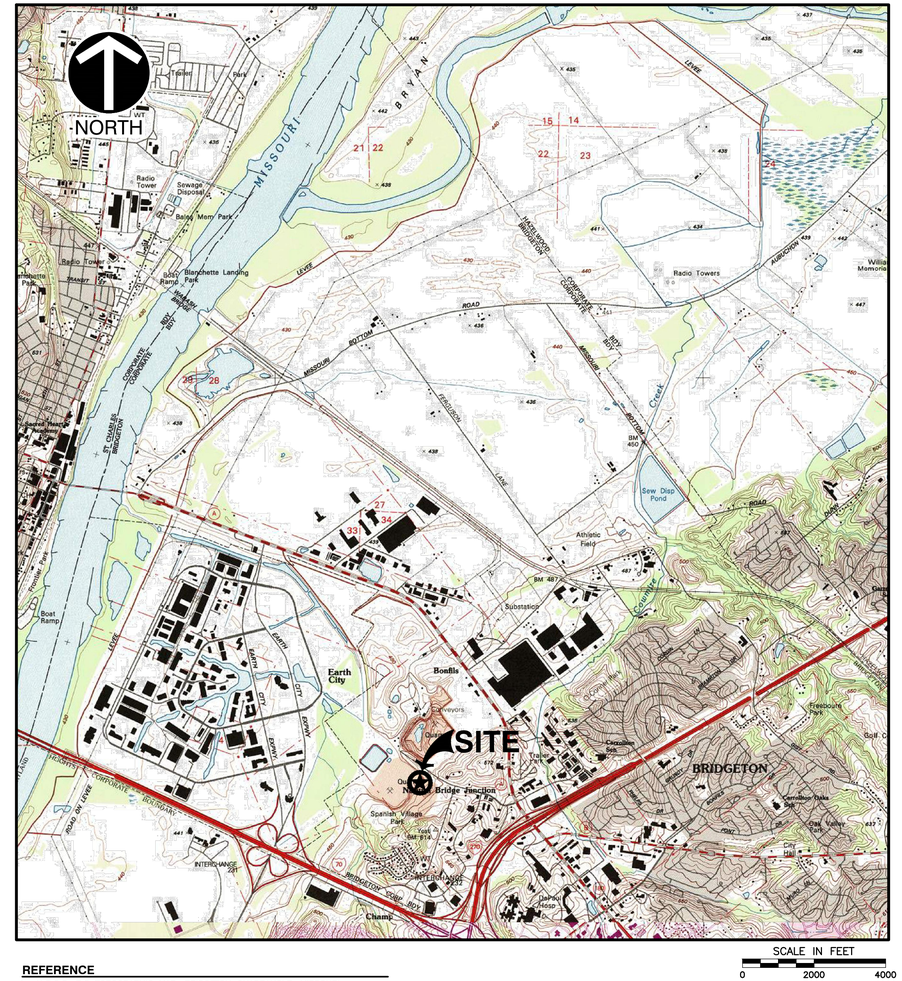

SCALE IN FEET
0 2000 4000

REFERENCE

1. U.S.G.S. 7.5 TOPOGRAPHIC MAP, BRIDGETON QUADRANGLE, MISSOURI

NOT FOR CONSTRUCTION

KEVIN KAMP, ENGINEER
PE - 2006019670
*HAND SIGNATURE ON INDIVIDUAL SHEETS

STATE OF MISSOURI
KEVIN T. KAMP
NUMBER
PE-2006019670
8/30/13
PROFESSIONAL ENGINEER

REVISION RECORD

NO	DATE	DESCRIPTION
1	--	
2	--	
3	--	
4	--	
5	--	
6	--	
7	--	
8	--	

Civil & Environmental Consultants, Inc.
4848 Park 370 Blvd., Suite F - Hazelwood, MO 63042
314-656-4566 - 866-250-3679
www.cecinc.com

BRIDGETON LANDFILL, LLC
13570 ST. CHARLES ROCK ROAD
BRIDGETON, MO 63044
PHONE: (314) 744-8195
FAX: (314) 656-2107

BRIDGETON LANDFILL
13570 ST. CHARLES ROCK ROAD
TREATMENT BLDG CONSTRUCTION PLANS
COVER SHEET

DATE:	AUGUST 2013	DRAWN BY:	CAC
DWG SCALE:	(AS NOTED)	CHECKED BY:	KTK
PROJECT NO:	130-484		
APPROVED BY:	KTK (SIGNED & SEALED)*		

DRAWING NO.:
C000

REVISION RECORD

NO	DATE	DESCRIPTION
1	--	--
2	--	--
3	--	--
4	--	--
5	--	--
6	--	--
7	--	--
8	--	--

Civil & Environmental Consultants, Inc.
4848 Park 370 Blvd., Suite F - Hazelwood, MO 63042
314-656-4566 · 866-250-3679
www.cecinc.com

BRIDGETON LANDFILL, LLC
13570 ST. CHARLES ROCK ROAD
BRIDGETON, MO 63044
PHONE: (314) 744-8195
FAX: (314) 656-2107

BRIDGETON LANDFILL
13570 ST. CHARLES ROCK ROAD
TREATMENT BLDG CONSTRUCTION PLANS
DEMOLITION PLAN

DATE:	JULY 2013	DRAWN BY:	SGB
DWG SCALE:	1" = 30'	CHECKED BY:	KTK
PROJECT NO:			130-484
APPROVED BY:			KTK (SIGNED & SEALED)*

DRAWING NO.: C100

P:\2013\130-484\-CADD\DWG\PHASE\130484-CV01-C100.DWG LAST SAVED BY:(CCOLTHORP) - 8/28/2013 5:14:01 PM, LAST PRINTED BY:(COLTHORP, CYNTHIA) - 8/30/2013 9:31:13 AM

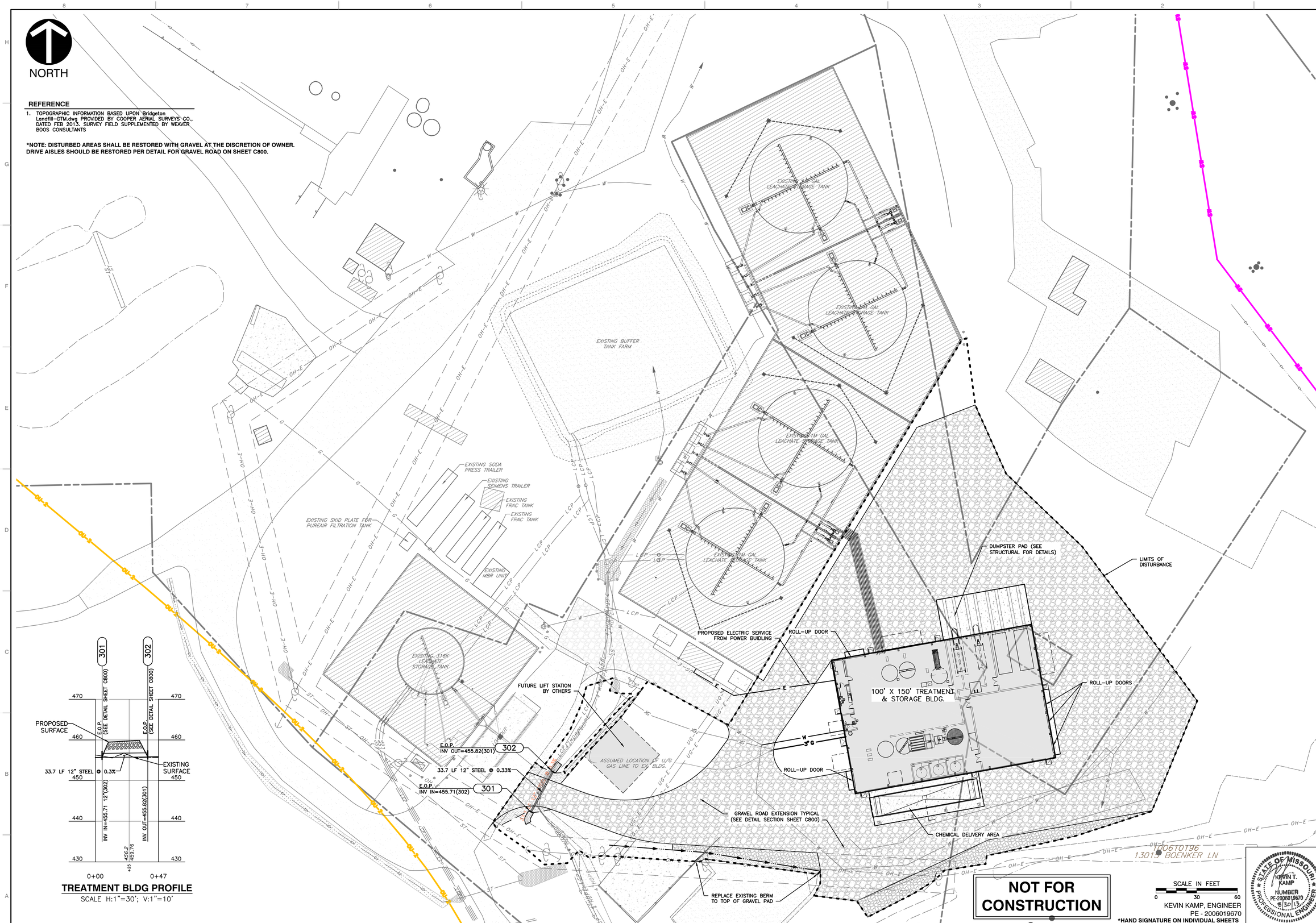

REFERENCE

1. TOPOGRAPHIC INFORMATION BASED UPON Bridgeton Landfill-DTM.dwg PROVIDED BY COOPER AERIAL SURVEYS CO., DATED FEB 2013. SURVEY FIELD SUPPLEMENTED BY WEAVER BOOS CONSULTANTS

*NOTE: DISTURBED AREAS SHALL BE RESTORED WITH GRAVEL AT THE DISCRETION OF OWNER. DRIVE AISLES SHOULD BE RESTORED PER DETAIL FOR GRAVEL ROAD ON SHEET C800.

TREATMENT BLDG PROFILE

SCALE H:1"=30'; V:1"=10'

NOT FOR CONSTRUCTION

SCALE IN FEET

0 30 60

KEVIN KAMP, ENGINEER

PE - 2006019670

*HAND SIGNATURE ON INDIVIDUAL SHEETS

STATE OF MISSOURI
KEVIN T. KAMP
NUMBER
PE-2006019670
8/30/13
PROFESSIONAL ENGINEER

REVISION RECORD

NO	DATE	DESCRIPTION
1	--	--
2	--	--
3	--	--
4	--	--
5	--	--
6	--	--
7	--	--
8	--	--

Civil & Environmental Consultants, Inc.
4848 Park 370 Blvd., Suite F - Hazelwood, MO 63042
314-656-4566 · 866-250-3679
www.cecinc.com

BRIDGETON LANDFILL, LLC
13570 ST. CHARLES ROCK ROAD
BRIDGETON, MO 63044
PHONE: (314) 744-8195
FAX: (314) 656-2107

BRIDGETON LANDFILL
13570 ST. CHARLES ROCK ROAD
TREATMENT BLDG CONSTRUCTION PLANS
SITE LAYOUT

DATE:	AUGUST 2013	DRAWN BY:	CAC
DWG SCALE:	1" = 30'	CHECKED BY:	KTK
PROJECT NO:			130-484
APPROVED BY:			KTK (SIGNED & SEALED)*

DRAWING NO.: C200

P:\2013\130-484\-CADD\DWG\PHASE\130484-CV01-C200.DWG LAST SAVED BY:(CCOLTHORP) - 8/30/2013 9:32:13 AM, LAST PRINTED BY:(COLTHORP, CYNTHIA) - 8/30/2013 9:32:44 AM

REFERENCE

1. TOPOGRAPHIC INFORMATION BASED UPON Bridgeton Landfill-DTM.dwg PROVIDED BY COOPER AERIAL SURVEYS CO., DATED FEB 2013. SURVEY FIELD SUPPLEMENTED BY WEAVER BOOS CONSULTANTS

NORTH

EXISTING BUFFER TANK FARM

EXISTING 1M GAL LEACHATE STORAGE TANK

EXISTING 1M GAL LEACHATE STORAGE TANK

EXISTING SODA PRESS TRAILER

EXISTING SEIMENS TRAILER

EXISTING FRAC TANK

EXISTING FRAC TANK

EXISTING MBR UNIT

LIMITS OF DISTURBANCE = 2.2 ACRES

TREATMENT BLDG. = 460.00 (FINISHED ELEVATION)

APPROX. LOCATION OF EXISTING 6" GAS. TOP OF PIPE PRESSURED @ 453.5 -FIELD VERIFY-

PAD READY FOR FUTURE LIFT STATION

RIP-RAP AT END OF PIPE (SEE DETAIL SHEET C800)

E.O.P. INV OUT=455.82(301) 302

E.O.P. INV IN=455.71(302) 301

33.7 LF 12" STEEL @ 0.3%

SILTATION CONTROL CHECK DAM -SILT FENCE OR 18" WATTLE (SEE DETAILS SHEET C800)

SILTATION CONTROL CHECK DAM -SILT FENCE OR 18" WATTLE (SEE DETAILS SHEET C800)

SCALE IN FEET 0 20 40

NOT FOR CONSTRUCTION

KEVIN KAMP, ENGINEER
PE - 2006019670
*HAND SIGNATURE ON INDIVIDUAL SHEETS

STATE OF MISSOURI
KEVIN T. KAMP
NUMBER PE-2006019670
8/30/13
PROFESSIONAL ENGINEER

REVISION RECORD

NO.	DATE	DESCRIPTION
1		
2		
3		
4		
5		
6		
7		
8		

Civil & Environmental Consultants, Inc.
4848 Park 370 Blvd., Suite F - Hazelwood, MO 63042
314-656-4566 - 866-250-3679
www.cecinc.com

BRIDGETON LANDFILL, LLC
13570 ST. CHARLES ROCK ROAD
BRIDGETON, MO 63044
PHONE: (314) 744-8195
FAX: (314) 656-2107

BRIDGETON LANDFILL
13570 ST. CHARLES ROCK ROAD
TREATMENT BLDG CONSTRUCTION PLANS
GRADING PLAN

DATE:	AUGUST 2013	DRAWN BY:	CAC
DWG SCALE:	(AS NOTED)	CHECKED BY:	KTK
PROJECT NO:			130-484
APPROVED BY:			KTK (SIGNED & SEALED)*

DRAWING NO.: C300

P:\2013\130-484\-CADD\DWG\PHASE01\130484-CV01-C300.DWG LAST SAVED BY:(COLTHORP) - 8/30/2013 9:34:31 AM, LAST PRINTED BY:(COLTHORP, CINTHIA) - 8/30/2013 9:34:56 AM

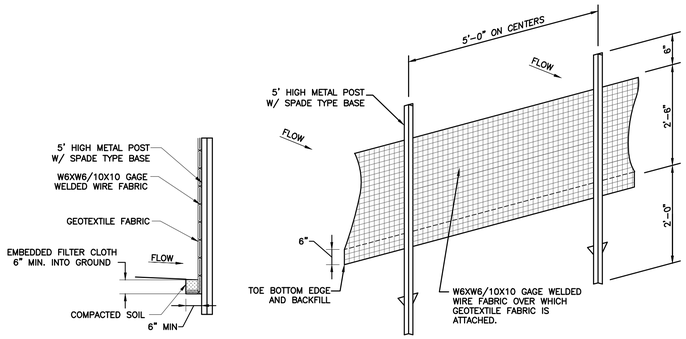

CONSTRUCTION SPECIFICATIONS

1. WIRE FENCING SHALL BE FASTENED SECURELY TO THE FENCE POSTS WITH WIRE TIES OR STAPLES.
2. FILTER CLOTH SHALL BE FASTENED SECURELY TO THE WIRE FENCING IN ACCORDANCE WITH THE MANUFACTURER'S RECOMMENDATION.
3. FILTER BARRIERS SHALL BE INSPECTED IMMEDIATELY AFTER EACH RAINFALL AND AT LEAST DAILY DURING PROLONGED RAINFALL. ANY REQUIRED REPAIRS SHALL BE MADE IMMEDIATELY.
4. SHOULD THE FABRIC DECOMPOSE OR BECOME INEFFECTIVE PRIOR TO THE END OF THE EXPECTED USABLE LIFE AND THE BARRIER STILL BE NECESSARY, THE FABRIC SHALL BE REPLACED PROMPTLY.
5. SEDIMENT DEPOSITS SHOULD BE REMOVED AFTER EACH STORM EVENT. THEY MUST BE REMOVED WHEN DEPOSITS REACH APPROXIMATELY HALF THE HEIGHT OF THE BARRIER.
6. ANY SEDIMENT DEPOSITS REMAINING IN PLACE AFTER THE SILT FENCE OR FILTER BARRIER IS NO LONGER REQUIRED SHALL BE DRESSED TO CONFORM WITH THE EXISTING GRADE, PREPARED AND SEEDED.

SILT FENCE

N.T.S.

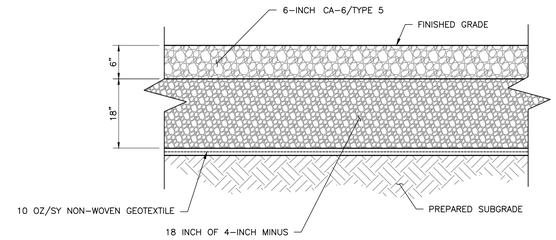

NOTES:
1. REFER TO GEOTECHNICAL REPORT FOR FURTHER SPECIFICATIONS AND/OR RECOMMENDATIONS.

GRAVEL ROAD (TYP)

NOT TO SCALE

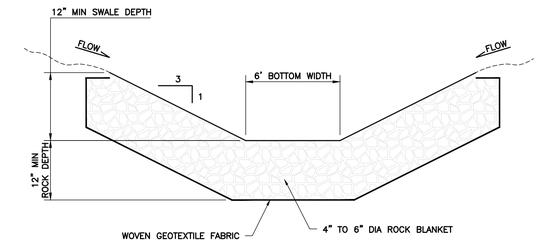

NOTES:
1. MINIMUM GRADE IN SWALE TO BE 0.50% TO PROPOSED STORM OUTLET PIPE.

GRAVEL SWALE

NOT TO SCALE

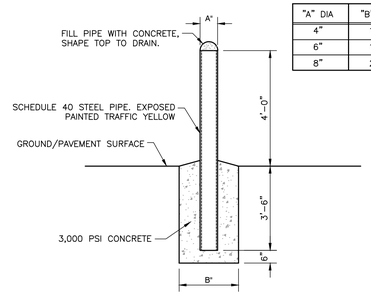

"A" DIA	"B" DIA
4"	16"
6"	18"
8"	20"

PIPE BOLLARD

NOT TO SCALE

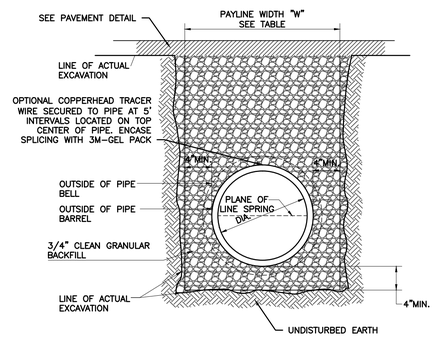

DUCTILE IRON AND STEEL PIPE BEDDING

N.T.S.

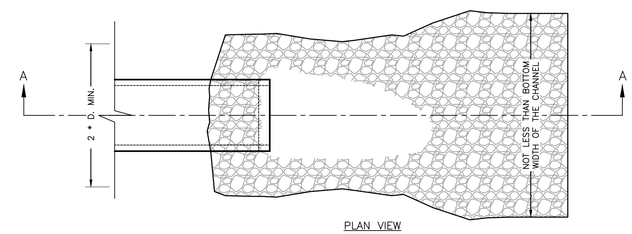

PLAN VIEW

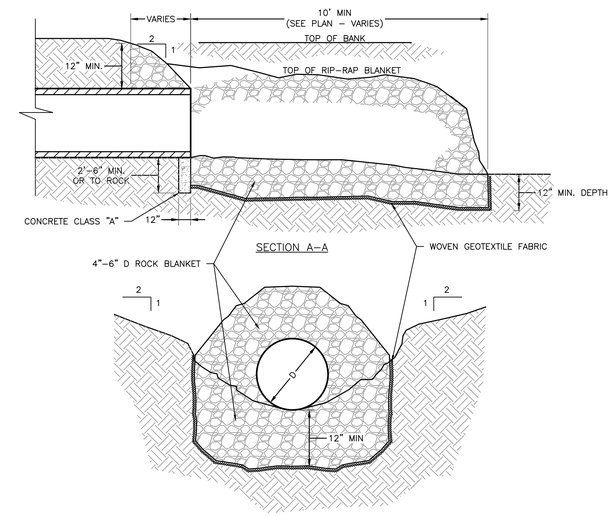

END VIEW

NOTES:
1. "D" = DIAMETER
2. GRADE OF ROCK BLANKET TO BE ADJUSTED ACCORDINGLY, TO BE USED AT INTAKE AND DISCHARGE END OF PIPE.

RIP-RAP AT PIPE END

NOT TO SCALE

WATTLE BAGS

Slope Percent	Maximum Slope Length Above Sediment Control in Feet (meters)*				
	8 in (200 mm) Sediment control	12 in (300 mm) Sediment control	18 in (450 mm) Sediment control	24 in (600mm) Sediment control	32 in (800mm) Sediment control
	6.5 in (160 mm)**	9.5 in (240 mm) **	14.5 in (300 mm) **	19 in (480 mm) **	25 in (650 mm) **
2 (or less)	600 (1100)	750 (225)	1000 (300)	1300 (400)	1650 (500)
5	400 (120)	500 (150)	550 (165)	650 (200)	750 (225)
10	200 (60)	250 (75)	300 (90)	400 (120)	500 (150)
15	140 (40)	120 (50)	200 (60)	325 (100)	450 (140)
20	100 (30)	125 (38)	140 (42)	250 (80)	400 (120)
25	80 (24)	100 (30)	110 (32)	200 (60)	275 (85)
30	60 (18)	75 (23)	90 (27)	130 (40)	200 (60)
35	60 (18)	75 (23)	80 (24)	115 (35)	150 (45)
40	60 (18)	75 (23)	80 (24)	100 (30)	125 (38)
45	40 (12)	50 (15)	60 (18)	80 (24)	100 (30)
50	40 (12)	50 (15)	55 (17)	65 (20)	75 (23)

* Based on a failure point of 36 in (0.9 m) super silt fence (wire reinforced) at 1000 ft (303 m) of slope, watershed width equivalent to receiving length of sediment control device, 1 in/ 24 hr (25 mm/24 hr) rain event.
** Effective height of Sediment control after installation. Important head from runoff as determined by Ohio State University.

OR SIMILAR

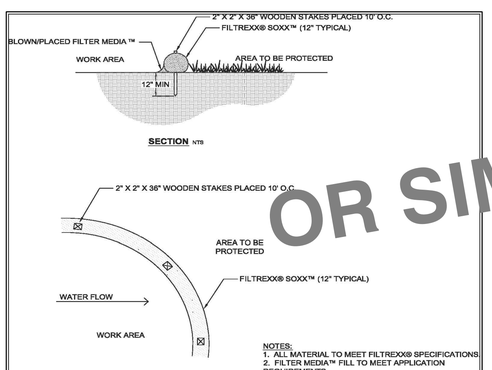

NOTES:
1. ALL MATERIAL TO MEET FILTREXX® SPECIFICATIONS.
2. FILTER MEDIA™ FILL TO MEET APPLICATION REQUIREMENTS.
3. COMPOST MATERIAL TO BE DISPERSED ON SITE, AS DETERMINED BY ENGINEER.

FILTREXX® SEDIMENT CONTROL

NTS

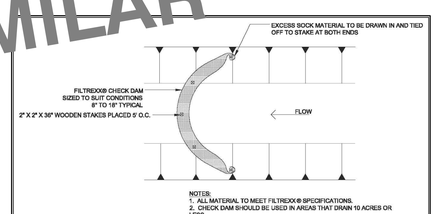

NOTES:
1. ALL MATERIAL TO MEET FILTREXX® SPECIFICATIONS.
2. CHECK DAM SHOULD BE USED IN AREAS THAT DRAIN 10 ACRES OR LESS.
3. SEDIMENT SHOULD BE REMOVED FROM REHIND CHECK DAM ONCE THE ACCUMULATED HEIGHT HAS REACHED ½ THE HEIGHT OF THE CHECK DAM.
4. CHECK DAM CAN BE DIRECT SEEDED AT THE TIME OF INSTALLATION.
5. CONTRACTOR IS REQUIRED TO BE A FILTREXX CERTIFIED™ INSTALLER.

FILTREXX® CHECK DAM

NTS

ROUND PIPE				HORIZONTAL ELLIPTICAL PIPE			
Inside Diameter of Pipe (Inches)	"W" Payline Width of Trench (Inches)	"W" Payline Width of Trench (Feet)	Pay--volumes cu.ft. per ft. Concrete Encasement	Inside Diameter of Pipe (Inches)	"W" Payline Width of Trench (Inches)	"W" Payline Width of Trench (Feet)	Pay--volumes cu.ft. per ft. Concrete Encasement
4	28	2.33	3.20				
6	28	2.33	3.46				
8	28	2.33	3.70				
10	28	2.33	3.86				
12	28	2.33	3.98				
15	32	2.67	4.89				
18	35	2.92	5.63	14 X 23	41	3.42	5.94
21	39	3.25	6.61				
24	42	3.50	7.39	19 X 30	49	4.08	7.68
27	45	3.75	8.18	22 X 34	53	4.42	8.61
30	49	4.08	9.30	24 X 38	58	4.83	9.70
33	53	4.42	10.53	27 X 42	62	5.17	10.71
36	56	4.67	11.43	29 X 45	66	5.50	11.72
39	D I S C O N T I N U E D			32 X 49	71	5.92	13.14
42	63	5.25	13.38	34 X 53	75	6.25	14.05
48	70	5.83	15.67	38 X 60	83	6.92	16.18
54	77	6.42	18.15	43 X 68	92	7.67	18.81
60	84	7.00	20.73	48 X 76	101	8.42	21.59
66	91	7.58	23.45	53 X 83	109	9.08	24.35
72	98	8.17	26.37	58 X 91	118	9.83	27.45
78	105	8.75	29.39	63 X 98	126	10.50	30.50
84	112	9.33	32.57	68 X 106	135	11.25	33.91
90	119	9.92	35.90	72 X 113	143	11.92	36.99
96	126	10.50	39.37	77 X 121	152	12.67	40.69
102	133	11.08	42.99	82 X 128	160	13.33	44.45
108	140	11.67	46.75	87 X 136	168	14.00	47.79
114	147	12.25	50.66	92 X 143	176	14.67	51.70
120	154	12.83	54.72	97 X 151	185	15.42	56.01
126	161	13.42	58.92				
132	168	14.00	63.27	106 X 166	202	16.83	64.48
144	182	15.17	72.40	116 X 180	218	18.17	73.59

PAYLINE WIDTHS-TRENCH PAY QUANTITIES

NOT FOR CONSTRUCTION

KEVIN KAMP, ENGINEER
PE - 2006019670
*HAND SIGNATURE ON INDIVIDUAL SHEETS

STATE OF MISSOURI
KEVIN T. KAMP
NUMBER PE-2006019670
PROFESSIONAL ENGINEER

REVISION RECORD

NO.	DATE	DESCRIPTION
1	07/19/13	SUBMITTAL FOR SITE DISTURBANCE
2	-	-
3	-	-
4	-	-
5	-	-
6	-	-
7	-	-
8	-	-

Civil & Environmental Consultants, Inc.
4848 Park 370 Blvd., Suite F - Hazelwood, MO 63042
314-656-4566 - 866-250-3679
www.cecinc.com

BRIDGETON LANDFILL, LLC
13570 ST. CHARLES ROCK ROAD
BRIDGETON, MO 63044
PHONE: (314) 744-8195
FAX: (314) 656-2107

BRIDGETON LANDFILL
13570 ST. CHARLES ROCK ROAD
TREATMENT BLDG CONSTRUCTION PLANS
CONSTRUCTION DETAILS

DATE:	AUGUST 2013	DRAWN BY:	CAC
DWG SCALE:	AS SHOWN	CHECKED BY:	DRAFT
PROJECT NO:			130-484
APPROVED BY:			KTK (SIGNED & SEALED)*

DRAWING NO.: C800

P:\2013\130-484\-CADD\DWG\PHASE01\130484-CV01-C800.DWG LAST SAVED BY:(COLTHORP) - 8/30/2013 9:53:38 AM, LAST PRINTED BY:(COLTHORP, CYNTHIA) - 8/30/2013 9:54:07 AM

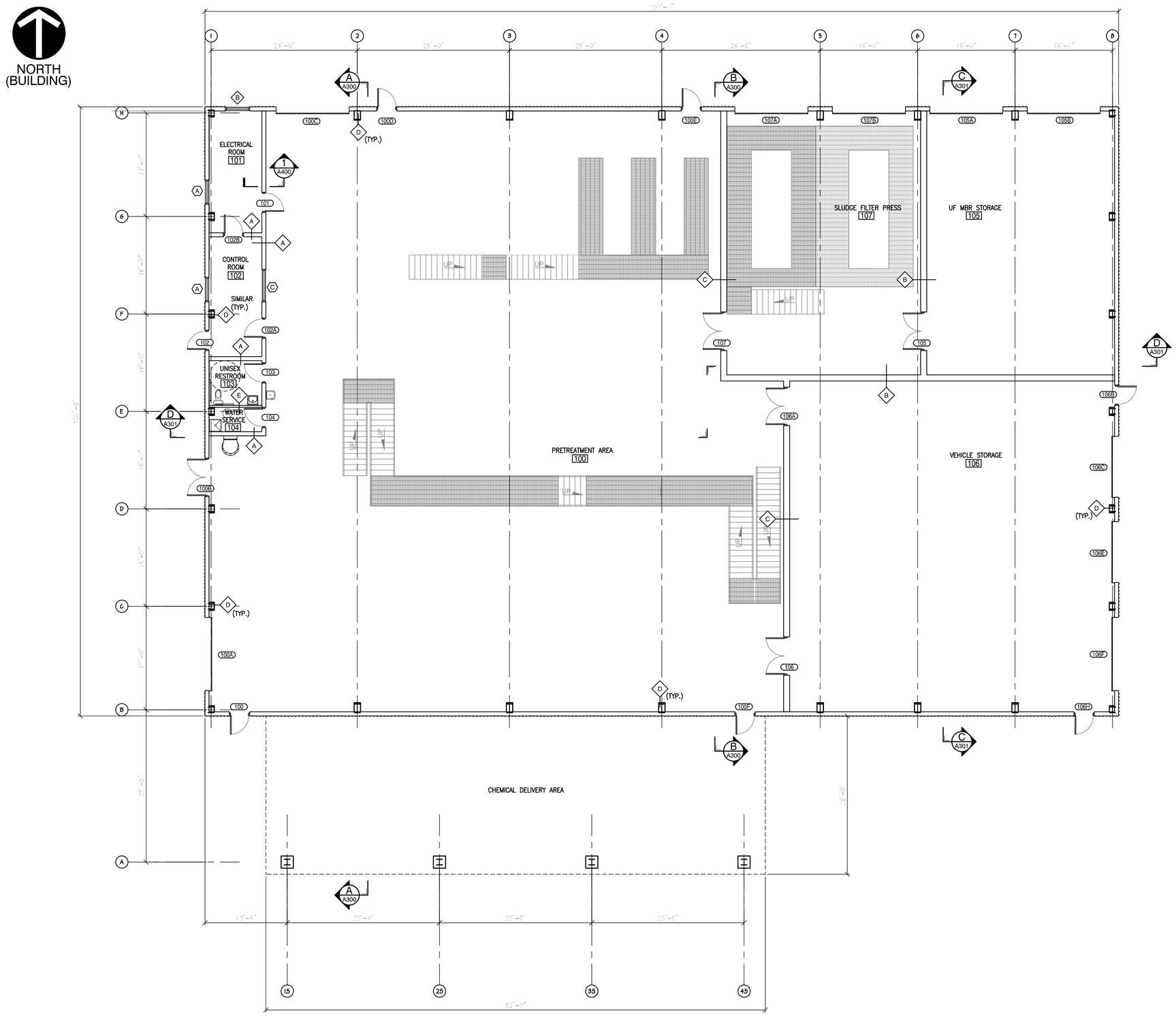

1 A100 GROUND FLOOR PLAN
1/8" = 1'-0"

SCALE: 1/8" = 1'-0"

LEGEND

- A — WALL TYPE
- 102 — ROOM NUMBER
- 105 — DOOR NUMBER
- A — WINDOW TYPE
- B — LOUVER/EXPLOSION VENT TYPE

NOTES:

1. NOTES

NOT FOR CONSTRUCTION

REVISION RECORD

NO	DATE	DESCRIPTION

Civil & Environmental Consultants, Inc.
4848 Park 370 Blvd., Suite F - Hazelwood, MO 63042
314-656-4566 · 866-250-3679
www.cecinc.com

BRIDGETON LANFILL, LLC
13570 ST. CHARLES ROCK ROAD
BRIDGETON, MO 63044
PHONE: (314) 744-8195
FAX: (314) 656-2107

BRIDGETON LANDFILL
TREATMENT BUILDING
GROUND FLOOR PLAN

DATE:	
DWG SCALE:	1/8" = 1'-0"
PROJECT NO:	130-484
APPROVED BY:	DRAFT
DATE	
DRAWN BY:	LKC
CHECKED BY:	DRAFT

DRAWING NO.: A100

P:\2013\130-484\-CADD\DWG\PHASE01\130484-A001-A100.DWG LAST SAVED BY:(COLTHORP) - 8/30/2013 9:46:14 AM, LAST PRINTED BY:(COLTHORP, CINTHIA) - 8/30/2013 9:46:43 AM

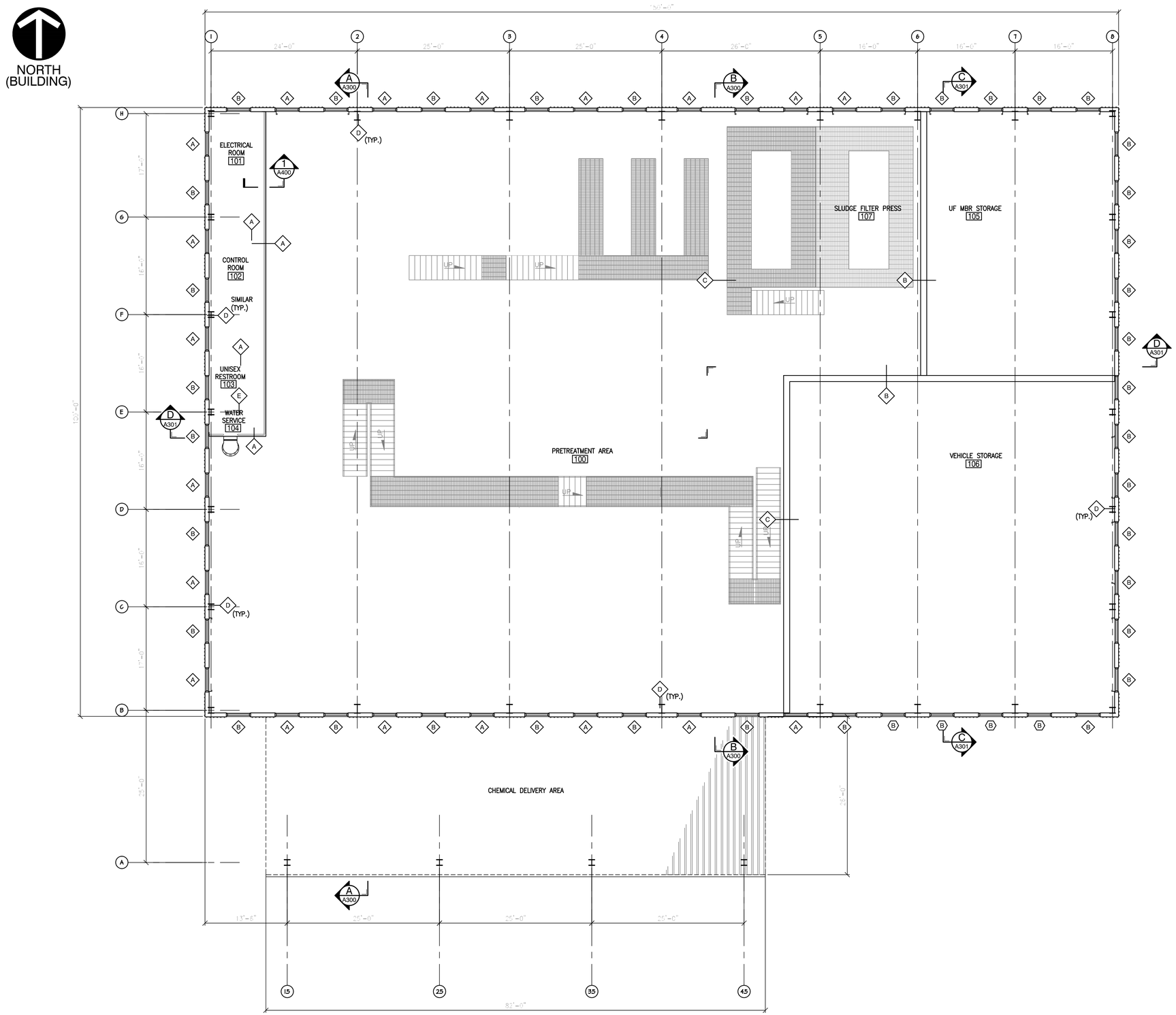

1 A101 MEZZANINE PLAN
1/8" = 1'-0"

SCALE: 1/8" = 1'-0"

LEGEND

- A — WINDOW TYPE
- B — LOUVER TYPE
- A — WALL TYPE

NOTES:

1. NOTES

NOT FOR CONSTRUCTION

REVISION RECORD

NO.	DATE	DESCRIPTION

Civil & Environmental Consultants, Inc.
4848 Park 370 Blvd., Suite F - Hazelwood, MO 63042
314-656-4566 · 866-250-3679
www.cecinc.com

BRIDGETON LANFILL, LLC
13570 ST. CHARLES ROCK ROAD
BRIDGETON, MO 63044
PHONE: (314) 744-8195
FAX: (314) 656-2107

BRIDGETON LANDFILL
TREATMENT BUILDING
MEZZANINE PLAN

DATE:	
DRAWN BY:	LKC
DWG SCALE:	1/8" = 1'-0"
CHECKED BY:	DRAFT
PROJECT NO:	130-484
APPROVED BY:	DRAFT

DRAWING NO.: A101

P:\2013\130-484\-CADD\DWG\PHASE01\130484-AR01-A101.DWG LAST SAVED BY:(COLTHORP) - 8/30/2013 9:44:10 AM, LAST PRINTED BY:(COLTHORP, CINTRA) - 8/30/2013 9:45:01 AM

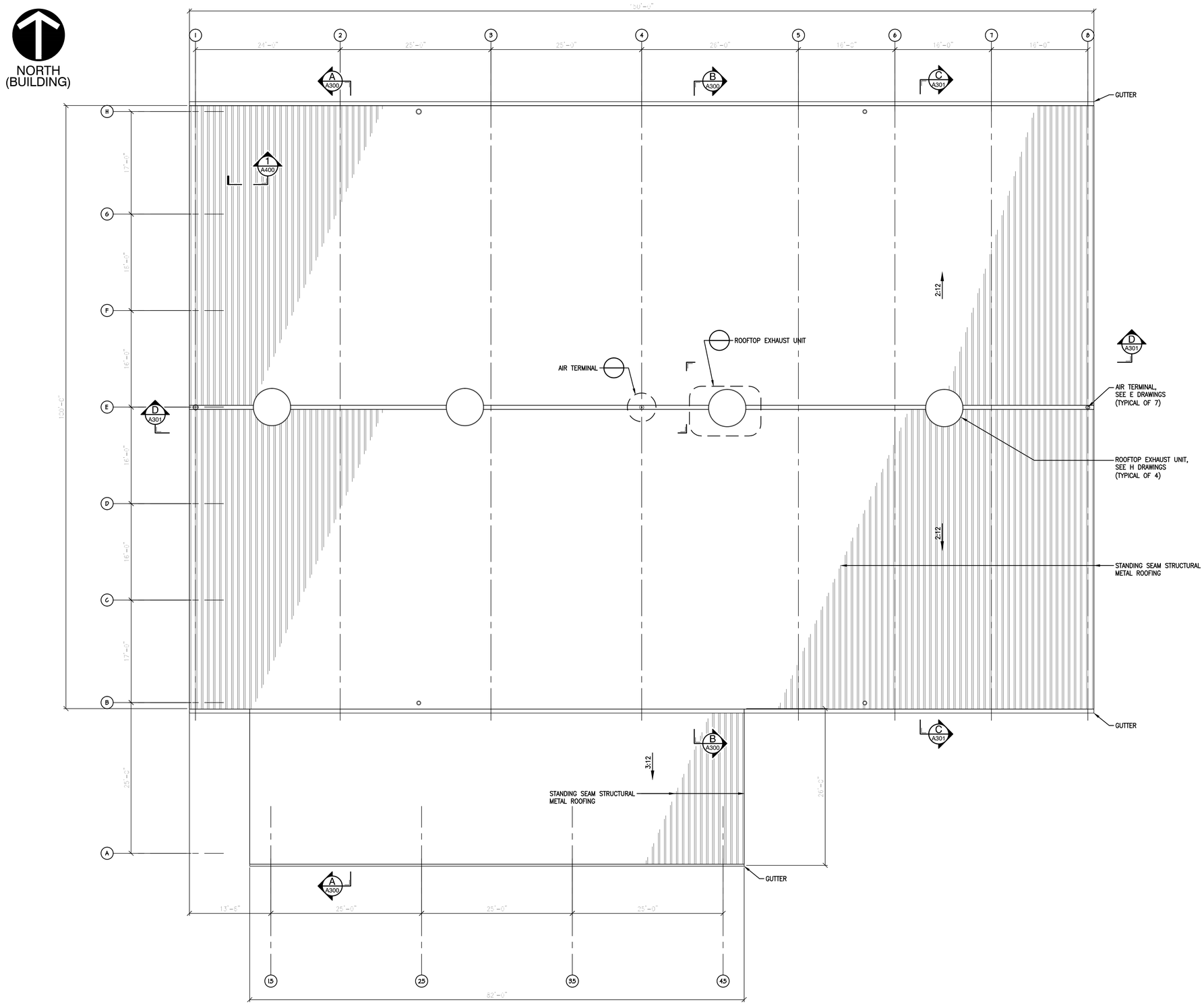

1 A102 ROOF PLAN
1/8" = 1'-0"

SCALE: 1/8" = 1'-0"

LEGEND

LEGEND ITEM

LEGEND ITEM

NOTES:

1. NOTES

NOT FOR CONSTRUCTION

REVISION RECORD

NO.	DATE	DESCRIPTION

Civil & Environmental Consultants, Inc.
4848 Park 370 Blvd., Suite F - Hazelwood, MO 63042
314-656-4566 · 866-250-3679
www.cecinc.com

BRIDGETON LANFILL, LLC
13570 ST. CHARLES ROCK ROAD
BRIDGETON, MO 63044
PHONE: (314) 744-8195
FAX: (314) 656-2107

BRIDGETON LANDFILL
TREATMENT BUILDING
ROOF PLAN

DATE:	DATE	LKC
DWG SCALE:	1/8" = 1'-0"	DRAFT
PROJECT NO.:		130-484
APPROVED BY:		DRAFT

DRAWING NO.:
A102

P:\2013\130-484\-CADD\DWGS\PHASE01\130484-A001-A102.DWG LAST SAVED BY:(CCOLTHORP) - 8/30/2013 9:48:43 AM, LAST PRINTED BY:(COLTHORP, CYNTHIA) - 8/30/2013 9:48:56 AM

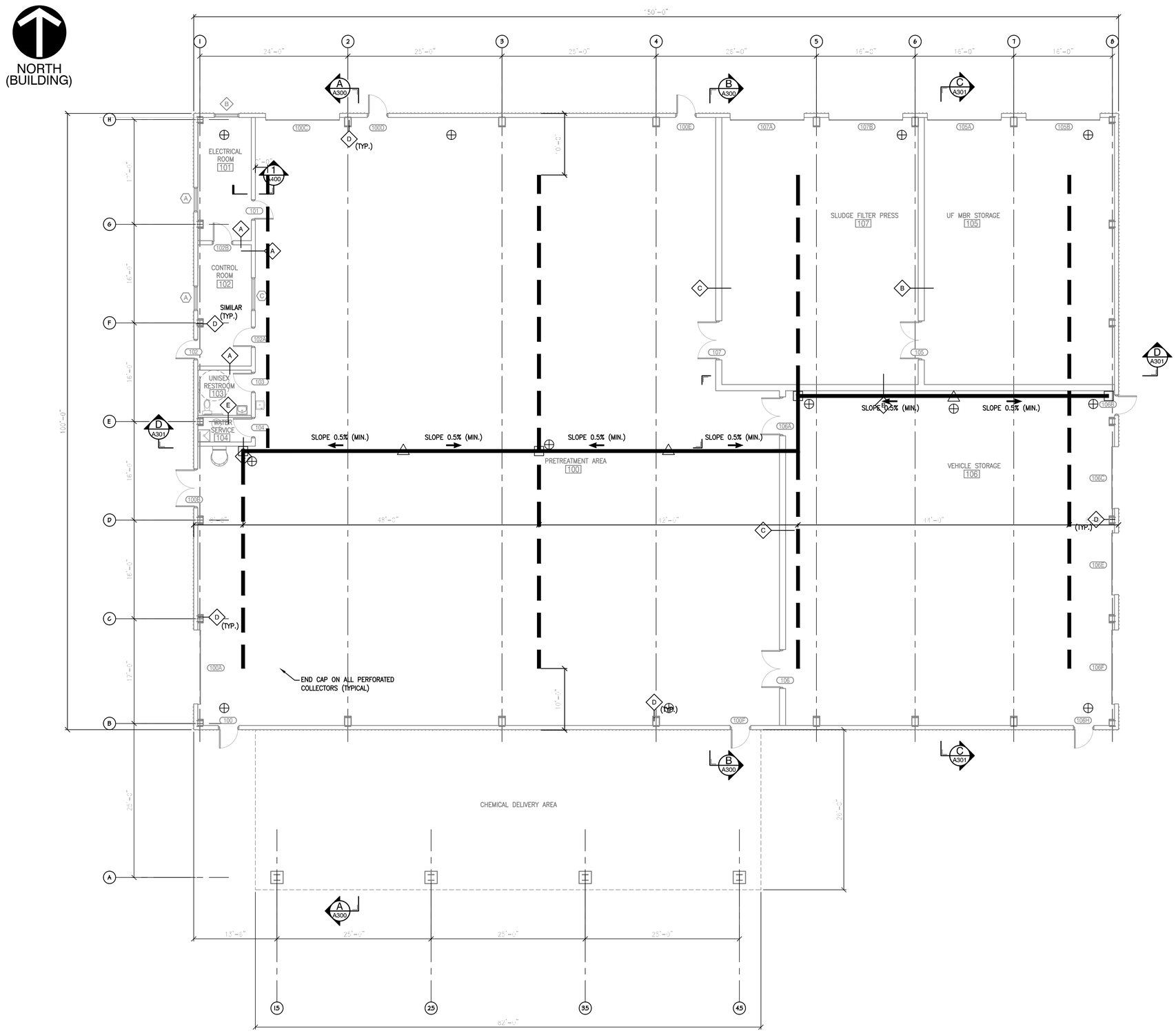

1 A103 SUBSLAB DRAINAGE AND VENTING PLAN
1/8" = 1'-0"

SCALE: 1/8" = 1'-0"

LEGEND

- PERFORATED GAS COLLECTION SCH. 40 PVC PIPE
- SOLID GAS COLLECTION SCH. 40 PVC PIPE
- SLOPE OF PIPE
- CONDENSATE SUMP / RISER VENT
- HIGH POINT IN PIPE
- CONDENSATE SUMP FOR ACTIVE SYSTEM
- SUB-SLAB SAMPLE ACCESS PORT

NOTES:

1. ALL SOLID PIPES SHALL BE PLACED AT A MINIMUM 0.5% SLOPE IN THE DIRECTION INDICATED ON THE PLAN.

NOT FOR CONSTRUCTION

REVISION RECORD

NO.	DATE	DESCRIPTION

Civil & Environmental Consultants, Inc.
4848 Park 370 Blvd., Suite F - Hazelwood, MO 63042
314-656-4566 · 866-250-3679
www.cecinc.com

BRIDGETON LANDFILL, LLC
13570 ST. CHARLES ROCK ROAD
BRIDGETON, MO 63044
PHONE: (314) 744-8195
FAX: (314) 656-2107

BRIDGETON LANDFILL
TREATMENT BUILDING
SUBSLAB DRAINAGE AND VENTING PLAN

DATE:	DATE	DRAWN BY: LKC
DWG SCALE:	NOT TO SCALE	CHECKED BY: DRAFT
PROJECT NO.:		130-484
APPROVED BY:		DRAFT

DRAWING NO.: A103

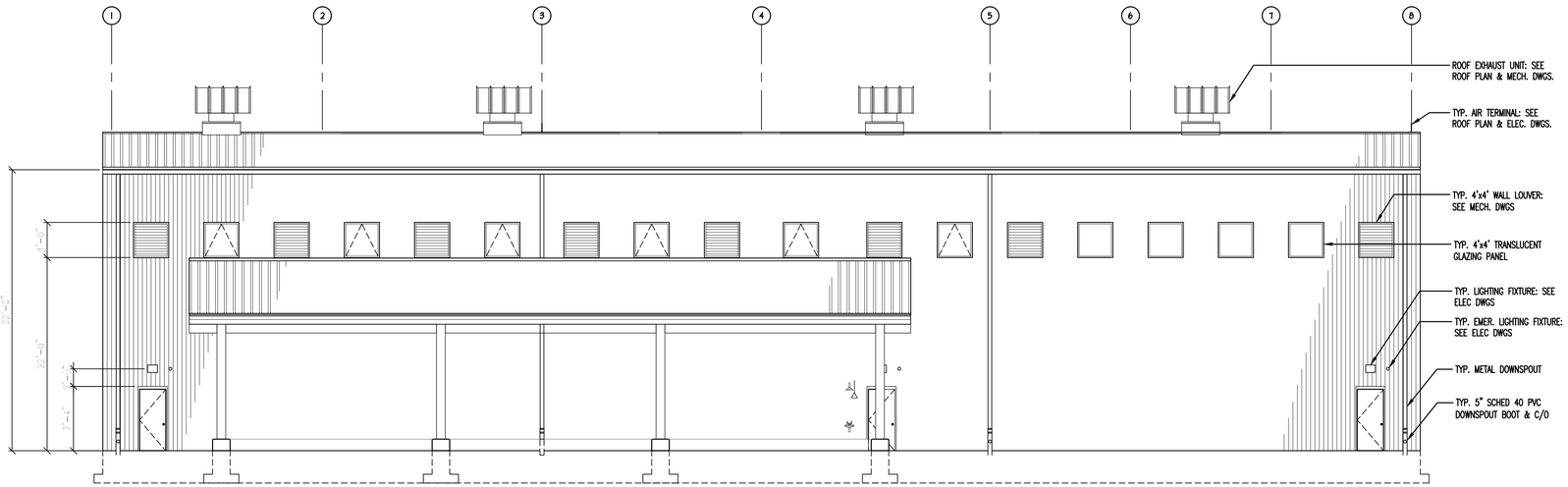

1 / A200 NORTH ELEVATION
1/8" = 1'-0"

0 1 2 4 8 16
SCALE: 1/8" = 1'-0"

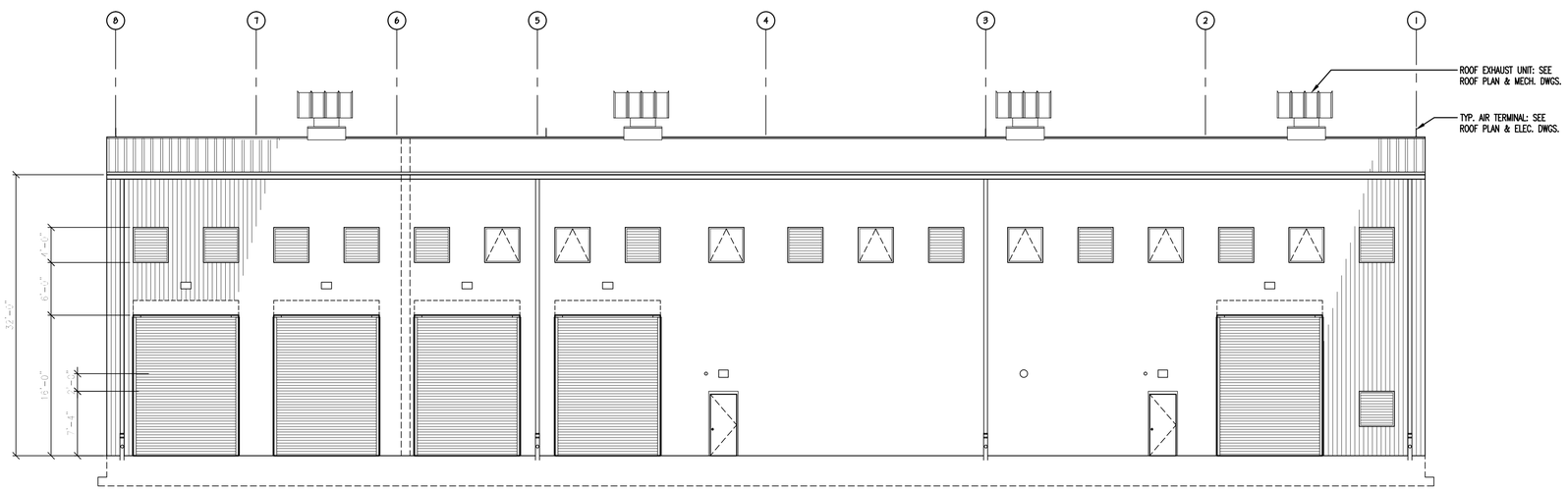

2 / A200 SOUTH ELEVATION
1/8" = 1'-0"

0 1 2 4 8 16
SCALE: 1/8" = 1'-0"

NOT FOR CONSTRUCTION

REVISION RECORD

NO.	DATE	DESCRIPTION

Civil & Environmental Consultants, Inc.
4848 Park 370 Blvd., Suite F - Hazelwood, MO 63042
314-656-4566 - 866-250-3679
www.cecinc.com

BRIDGETON LANFILL, LLC
13570 ST. CHARLES ROCK ROAD
BRIDGETON, MO 63044
PHONE: (314) 744-8195
FAX: (314) 656-2107

BRIDGETON LANDFILL
TREATMENT BUILDING
EXTERIOR ELEVATIONS

DATE:		DRAWN BY:	LKC
DWG SCALE:	NOT TO SCALE	CHECKED BY:	DRAFT
PROJECT NO.:			130-484
APPROVED BY:			DRAFT

DRAWING NO.:
A200

P:\2013\130-484\-CADD\DWG\PHASE01\130484-A001-A200.DWG LAST SAVED BY:(CCOLTHORP) - 8/30/2013 9:51:06 AM, LAST PRINTED BY:(COLTHORP, CYNTHIA) - 8/30/2013 9:51:19 AM

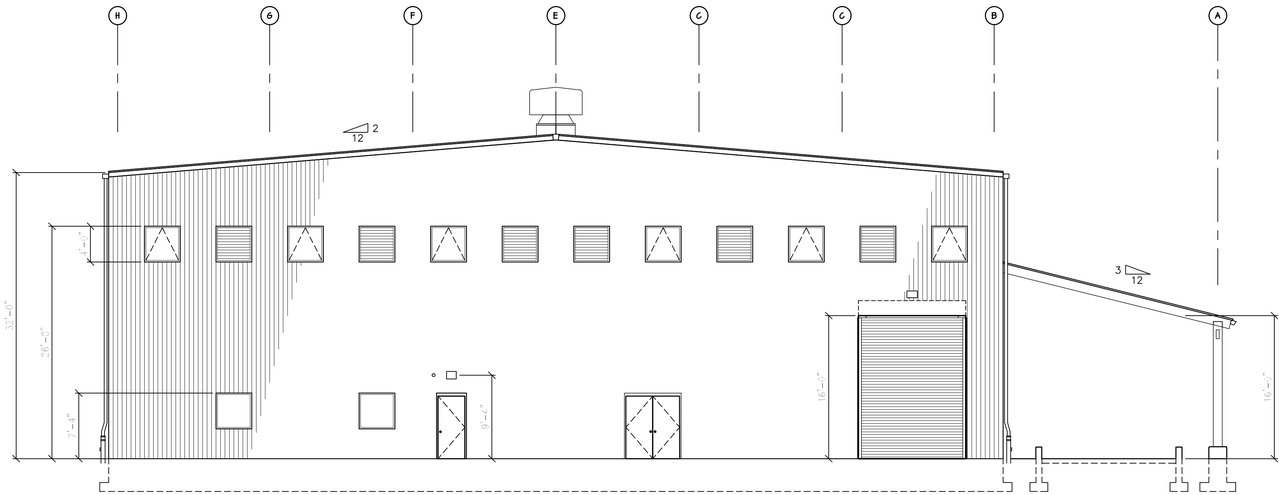

1 A201 WEST ELEVATION
1/8" = 1'-0"

0 1 2 4 8 16
SCALE: 1/8" = 1'-0"

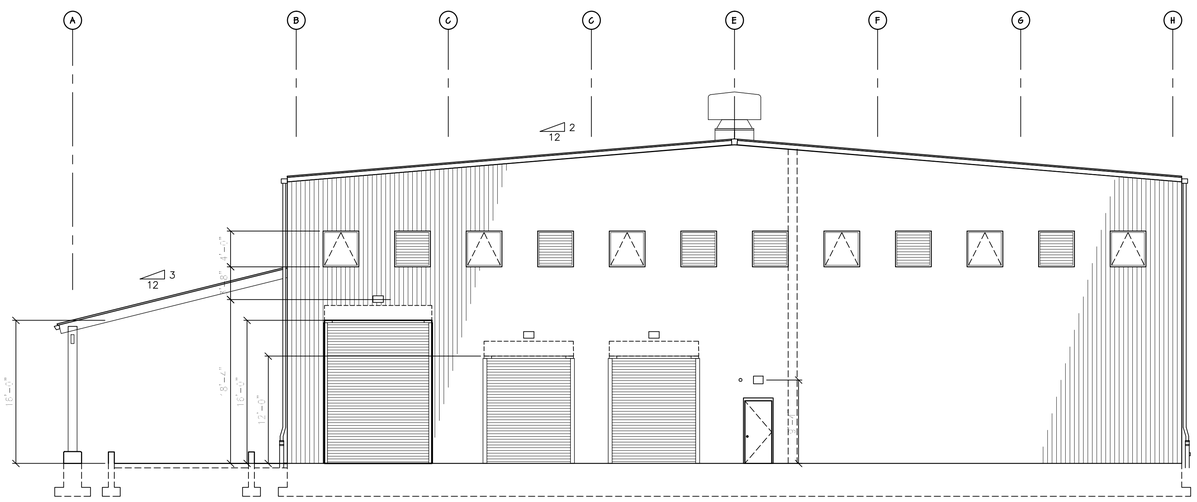

2 A201 EAST ELEVATION
1/8" = 1'-0"

0 1 2 4 8 16
SCALE: 1/8" = 1'-0"

NOT FOR CONSTRUCTION

REVISION RECORD

NO.	DATE	DESCRIPTION

Civil & Environmental Consultants, Inc.
4848 Park 370 Blvd., Suite F - Hazelwood, MO 63042
314-656-4566 · 866-250-3679
www.cecinc.com

BRIDGETON LANFILL, LLC
13570 ST. CHARLES ROCK ROAD
BRIDGETON, MO 63044
PHONE: (314) 744-8195
FAX: (314) 656-2107

BRIDGETON LANDFILL
TREATMENT BUILDING
EXTERIOR ELEVATIONS

DATE:	DATE	DRAWN BY:	LKC
DWG SCALE:	NOT TO SCALE	CHECKED BY:	DRAFT
PROJECT NO.:			130-484
APPROVED BY:			DRAFT

DRAWING NO.:
A201

P:\2013\130-484\-CADD\DWG\PHASE01\130484-A001-A000.DWG LAST SAVED BY:(CCDLTHORP) - 8/30/2013 9:55:39 AM, LAST PRINTED BY:(CCDLTHORP, CYNTHIA) - 8/30/2013 9:55:56 AM

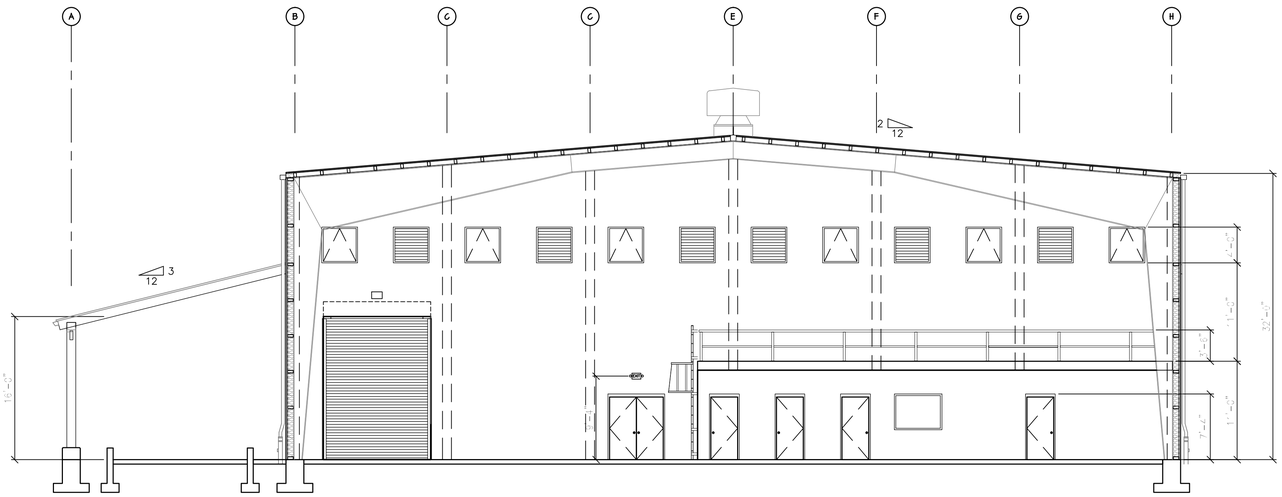

A BUILDING SECTION A
A300
1/8" = 1'-0"

0 1 2 4 8 16
SCALE: 1/8" = 1'-0"

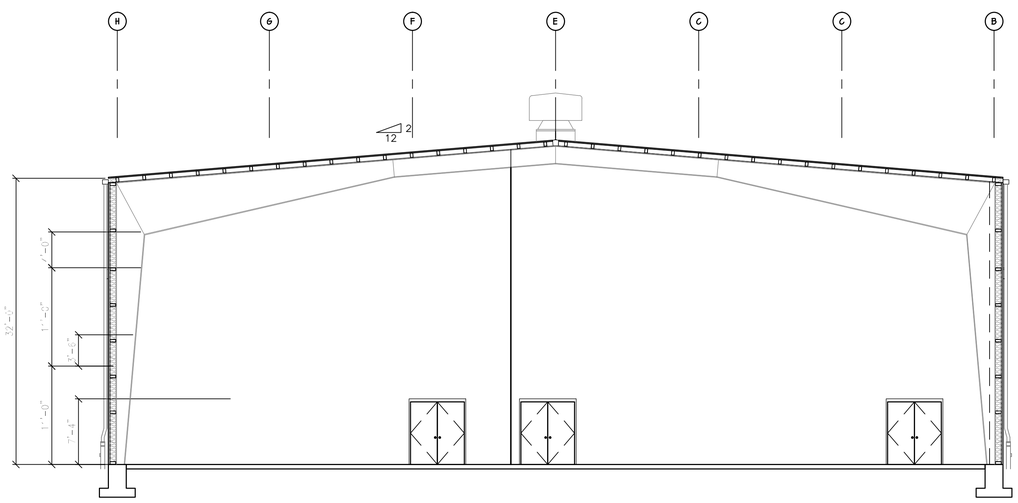

B BUILDING SECTION B
A300
1/8" = 1'-0"

0 1 2 4 8 16
SCALE: 1/8" = 1'-0"

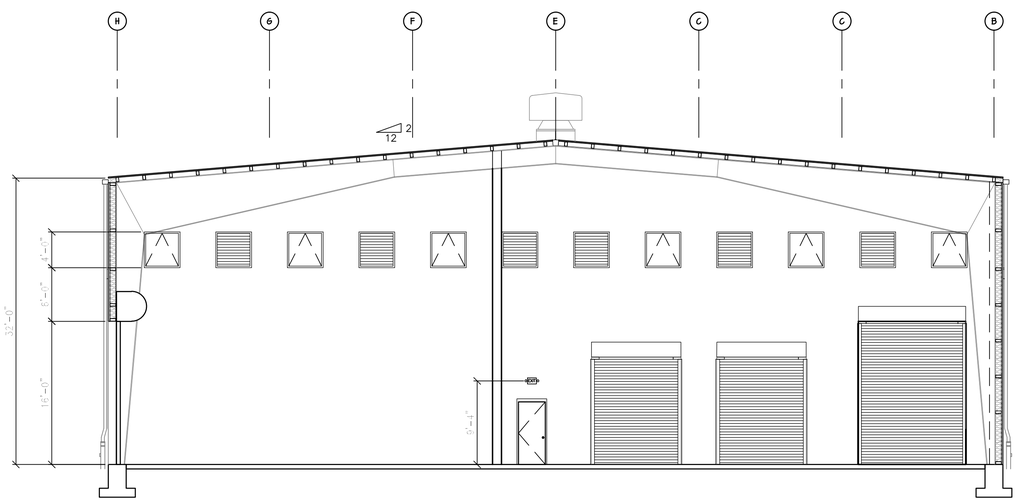

C BUILDING SECTION C
A300
1/8" = 1'-0"

0 1 2 4 8 16
SCALE: 1/8" = 1'-0"

NOT FOR CONSTRUCTION

REVISION RECORD

NO	DATE	DESCRIPTION

Civil & Environmental Consultants, Inc.
4848 Park 370 Blvd., Suite F - Hazelwood, MO 63042
314-656-4566 · 866-250-3679
www.cecinc.com

BRIDGETON LANFILL, LLC
13570 ST. CHARLES ROCK ROAD
BRIDGETON, MO 63044
PHONE: (314) 744-8195
FAX: (314) 656-2107

BRIDGETON LANDFILL
TREATMENT BUILDING
BUILDING SECTIONS

DATE:	DATE	DRAWN BY:	LKC
DWG SCALE:	NOT TO SCALE	CHECKED BY:	DRAFT
PROJECT NO:			130-484
APPROVED BY:			DRAFT

DRAWING NO.:
A300

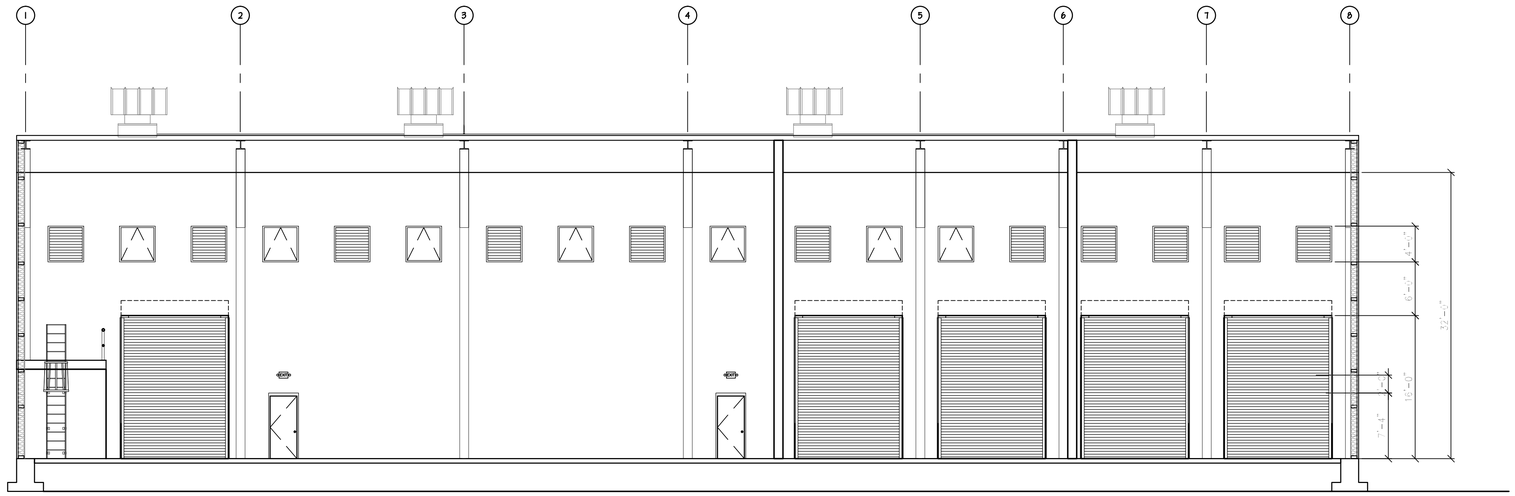

D A301 BUILDING SECTION D
1/8" = 1'-0"

0 1 2 4 8 16
SCALE: 1/8" = 1'-0"

NOT FOR CONSTRUCTION

REVISION RECORD

NO	DATE	DESCRIPTION
--	--	--
--	--	--
--	--	--
--	--	--
--	--	--
--	--	--
--	--	--
--	--	--

Civil & Environmental Consultants, Inc.
4848 Park 370 Blvd., Suite F - Hazelwood, MO 63042
314-656-4566 · 866-250-3679
www.cecinc.com

BRIDGETON LANFILL, LLC
13570 ST. CHARLES ROCK ROAD
BRIDGETON, MO 63044
PHONE: (314) 744-8195
FAX: (314) 656-2107

BRIDGETON LANDFILL
TREATMENT BUILDING
BUILDING SECTIONS

DATE:	DATE	DRAWN BY:	LKC
DWG SCALE:	NOT TO SCALE	CHECKED BY:	DRAFT
PROJECT NO:			130-484
APPROVED BY:			DRAFT

DRAWING NO.:
A301

P:\2013\130-484\-CADD\DWG\PHASE01\130484-A001-A300.DWG LAST SAVED BY:(CCOLTHORP) - 8/30/2013 9:57:13 AM, LAST PRINTED BY:(COLTHORP, CYNTHIA) - 8/30/2013 9:57:58 AM

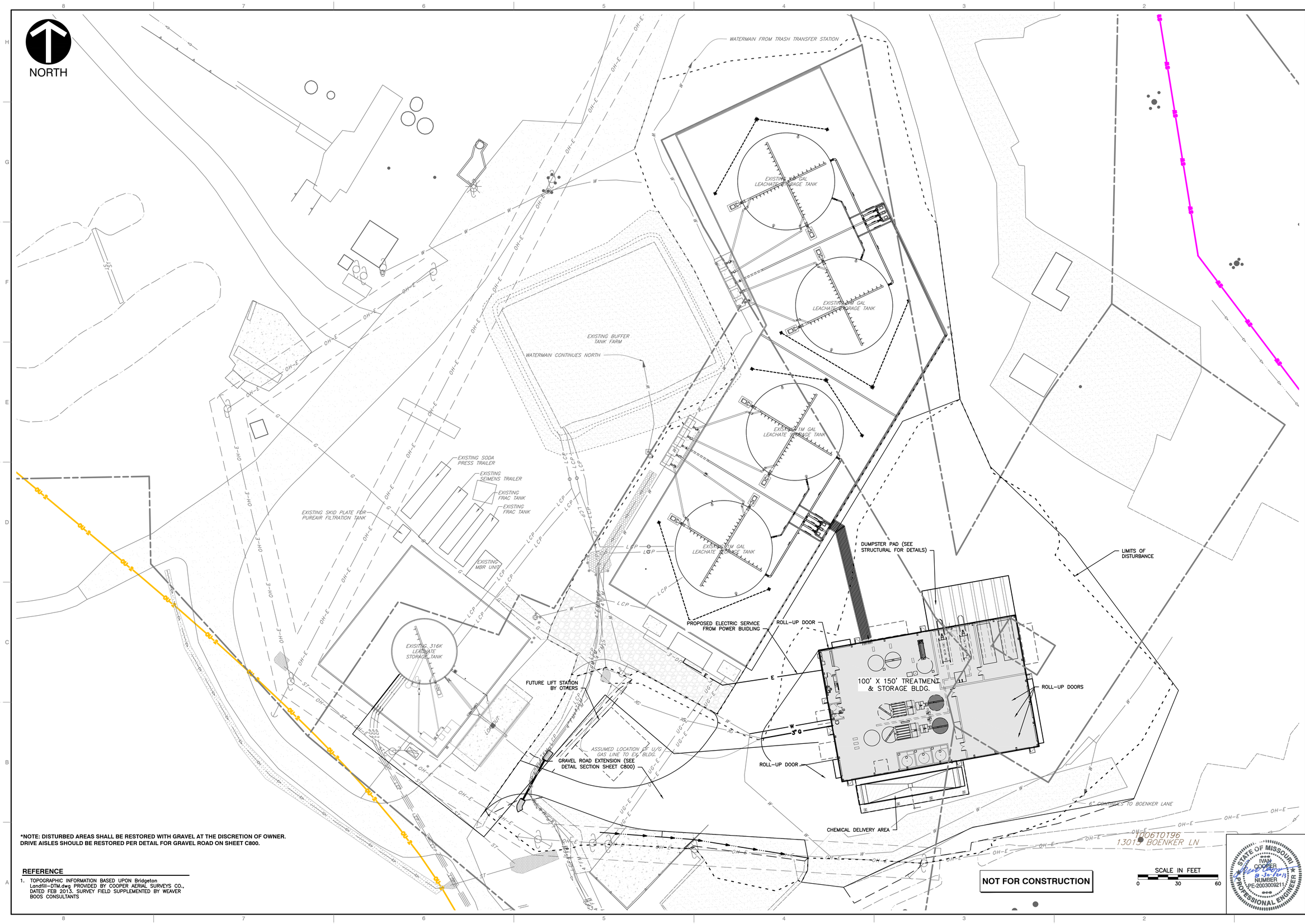

*NOTE: DISTURBED AREAS SHALL BE RESTORED WITH GRAVEL AT THE DISCRETION OF OWNER. DRIVE AISLES SHOULD BE RESTORED PER DETAIL FOR GRAVEL ROAD ON SHEET C800.

REFERENCE

1. TOPOGRAPHIC INFORMATION BASED UPON Bridgeton Landfill-DTM.dwg PROVIDED BY COOPER AERIAL SURVEYS CO., DATED FEB 2013. SURVEY FIELD SUPPLEMENTED BY WEAVER BOOS CONSULTANTS

REVISION RECORD

NO	DATE	DESCRIPTION
1		
2		
3		
4		
5		
6		
7		
8		

Civil & Environmental Consultants, Inc.
4848 Park 370 Blvd., Suite F - Hazelwood, MO 63042
314-656-4566 · 866-250-3679
www.ceoinc.com

BRIDGETON LANDFILL, LLC
13570 ST. CHARLES ROCK ROAD
BRIDGETON, MO 63044
PHONE: (314) 744-8195
FAX: (314) 656-2107

BRIDGETON LANDFILL
13570 ST. CHARLES ROCK ROAD
TREATMENT BLDG CONSTRUCTION PLANS
YARD PIPING

DATE:	AUGUST 2013	DRAWN BY:	CAC,JKS
DWG SCALE:	1" = 30'	CHECKED BY:	130-484
PROJECT NO:			
APPROVED BY:			

DRAWING NO.: **P-100**

PIPING COMPONENT IDENTIFIERS

ACKY	ALARM CHECK VALVE
BFP	BACKFLOW PREVENTER VALVE
BS	BLIND SPACER
BDV	BLOWDOWN VALVE
CKV	CHECK VALVE
DV	DELUGE VALVE
DRV	DRAIN VALVE
EXJ	EXPANSION JOINT
EYW	EYE WASH STATION
FLT	FILTER
FHC	FIRE HOSE CABINET
FHH	FIRE HOSE
FXH	FLEXIBLE HOSE
GLK	GREYLOCK FITTING
HYD	HYDRANT
ISU	ISOLATION DAMPER
ISV	ISOLATION VALVE
OS	OPEN SPACER
OR	ORIFICE DRAIN
OCON	QUICK DISCONNECT
PR	PRESSURE RELIEF VALVE
PRV	PRESSURE REDUCING VALVE
RV	RELIEF VALVE
RTV	ROOT VALVE
SMV	SAMPLE VALVE
TTV	TELL TALE VALVE
SCN	SCREEN
SHR	SHOWER
SHV	SHUTDOWN VALVE
SIL	SILENCER
SLG	SLUICE OR SLIDE GATE
SPGR	SPARGER
SPF	SPECTICAL FLANGE
STR	STRAINER
TSTR	TEMPORARY STRAINER
TSV	TEST VALVE
TRP	TRAP
VAR	VACUUM BREAKER WITH AIR RELEASE VALVE
VTV	VENT VALVE
YSTR	Y-STRAINER
XV	MODULATING VALVE
XV SOL	SOLENOID VALVE

VALVE AND ACCESSORIES SYMBOLS

GATE VALVE
GLOBE VALVE
BALL VALVE
DIAPHRAGM VALVE
BUTTERFLY VALVE
PLUG VALVE
NEEDLE VALVE
SWING CHECK VALVE
3-WAY BALL
ANGLE BLOWDOWN
Y BLOWDOWN
3-WAY PLUG
4-WAY PLUG
WAFER CHECK
TILT DISC CHECK
LIFT CHECK
STOP CHECK
ANGLE GLOBE
Y GLOBE
AIR RELEASE/ADDITION
BALL CHECK VALVE
FLUSHING VALVE CHEMICAL PUMP
PRESSURE/VACUUM RELIEF VALVE (PSV) TO ATMOSPHERE
FOUR OR FIVE FUNCTION VALVE (CHEMICAL METERING PUMP)
CHEMICAL INJECTION /CHECK VALVE
FOOT VALVE (POLYMER FEEDERS)
DRIP TRAP (FOR GAS)
STEAM TRAP
PULSATION DAMPENER
MALE HOSE CONNECTOR
FEMALE HOSE CONNECTOR
FLEXIBLE CONNECTOR
FLEXIBLE REDUCER (ECCENTRIC)
FLEXIBLE REDUCER (CONCENTRIC)
THERMAL SHUT OFF VALVE
FLAME CHECK
FLAME ARRESTOR
SPRAY NOZZLE
WELD-O-LET THRD-O-LET OR SADDLE
NO NORMALLY OPEN
NC NORMALLY CLOSED
SOLENOID VALVE (2-WAY OR 3-WAY)
FLEXIBLE COUPLING
BREATHER
DIAPHRAGM SEAL
MOTORIZED VALVE OPERATOR
PNEUMATIC VALVE OPERATOR
ELECTRO-PNEUMATIC CONVERTER (CURRENT TO PRESSURE)
ROTOMETER W/ RATE SET
FLOW SIGHT GLASS
LEVEL SIGHT GLASS
SAFETY SHOWER/ EYE WASH
'Y' STRAINER
SUCTION STRAINER (COMPOSITE SAMPLER)
IN-LINE SAMPLE CELL (COMPOSITE SAMPLER)
SMALL IN-LINE AIR FILTER
BACK FLOW PREVENTER
PRESSURE REGULATOR (SELF CONTAINED)
PRESSURE REGULATOR WITH REMOTE
PILOT LINE

INSTRUMENTATION SYMBOLS

LOCALLY MOUNTED INSTRUMENT (X = FUNCTION, IF NEEDED)
MAIN PANEL MOUNTED INSTRUMENT
BACK OF MAIN PANEL MOUNTED INSTRUMENT
MOTOR CONTROL CENTER MOUNTED INSTRUMENT
COMPUTER INTERFACED INSTRUMENT
COMPUTER DISPLAYED ALARMS
INSTRUMENTS SHARING COMMON HOUSING (i.e. INTEGRAL XMTR)
PILOT LIGHT (X = LENS COLOR)
LOCALLY MOUNTED INSTRUMENT, PART OF VENDOR PACKAGE
VENDOR PANEL MOUNTED INSTRUMENT
BACK OF VENDOR PANEL MOUNTED INSTRUMENT
RELAY LOGIC INTERLOCK IN PANEL
MOTOR CONTROL
ORIFICE PLATE

INSTRUMENTATION IDENTIFICATION LETTERS

	PRIM./FINAL ELEMENTS		TRANS.	READOUT DEVICES INDC.	RECD.	CONTROLLERS INDC./BLIND			
ANALYSIS (pH, ORP, etc.)	AE	AV	AT	AI	AIR	AIC	AC	--	--
BURNER/COMBUSTION	BE	BV	BT	BI	--	--	BC	--	BY
ELEC. VOLTAGE	EE	EZ	ET	EI	EIR	EIC	EC	--	EY
FLOW RATE	FE	FV	FT	FI	FIR	FIC	FC	FSL	FY
FLOW TOTAL	--	--	--	FQI	FQIR	--	--	--	--
FLOW RATIO	--	--	--	--	--	FFIC	FFC	--	--
HAND (MANUAL)	--	HV	--	--	--	HIC	--	HS	--
ELEC. CURRENT	IE	IZ	IT	II	IIR	IIC	IC	--	IY
ELEC. POWER	JE	JZ	JT	JI	JIR	JIC	JC	--	JY
TIME	KE	KV	--	KI	KIR	KIC	KC	--	KY
LEVEL	LE	LV	LT	LI	LIR	LIC	LC	LSH	LY
MOISTURE/HUMIDITY	ME	MV	MT	MI	MIR	MIC	MC	--	--
PRESSURE/VACUUM	PE	PV	PT	PI	PIR	PIC	PC	PSH	PY
PRESSURE DIFFERENTIAL	PDE	PDV	PDT	PDI	PDIR	PDIC	PDC	PDSH	
SPEED/FREQUENCY	SE	SZ	ST	SI	SIR	SIC	SC	--	--
TEMPERATURE	TE	TV	TT	TI	TIR	TIC	TC	TSL	TY
VIBRATION	VE	VZ	VT	VI	VIR	--	--	VSH	VY
WEIGHT/FORCE	WE	WZ	WT	WI	WIR	WIC	WC	WSH	WY
STATUS				YI	YIR	YIC	YC		

MISCELLANEOUS

TW = THERMOWELL
MW = MANWAY
VSD = VARIABLE SPEED DRIVE (DC)
VFD = VARIABLE FREQUENCY DRIVE (AC)
FG = FLOW SIGHT GLASS
VS = VENDOR SUPPLIED
LG = LEVEL SIGHT GLASS
DO = DISSOLVED OXYGEN
CND = CONDUCTIVITY
SP = SAMPLE PORTS
NH_3 = AMMONIA

ALARMS

A = ALARM
H = HIGH ALARM
HH = HIGH HIGH ALARM
L = LOW ALARM
LL = LOW LOW ALARM
FAIL = FAILURE

INSTRUMENTATION LINE TYPES

INSTRUMENT SUPPLY (CONNECTION TO PROCESS)
ELECTRICAL SIGNAL
PNEUMATIC SIGNAL
SOFTWARE OR DATA LINE
MECHANICAL LINK
HEAT TRACED & INSULATED
CAPILLARY TUBING (FILLED SYSTEM)
ELECTRICAL SIGNAL
INTERFACE LINK
BINARY ELECTRICAL SIGNAL
HYDRAULIC SIGNAL
ELECTROMAGNETIC OR SONIC SIGNAL
IA INSTRUMENTATION AIR SUPPLY

PIPING LINE SYMBOLS

PRIMARY PIPING
SECONDARY PIPING
EXISTING PIPING (SHOWN FOR REFERENCE ONLY)
SLOPE PIPING
TEMPORARY PIPING
HEAT TRACED PIPING
STREAM NUMBER
UNDERGROUND PIPING
JACKETED PIPING

PROCESS EQUIPMENT SYMBOLS

FLOAT SWITCH
ULTRASONIC SENSOR
TUNING FORK SWITCH
DRAIN TO BUCKET
CHEMICAL TOTE WITH CONTAINMENT
TOP ENTRY MIXER
FLOOR DRAIN
CALIBRATION COLUMN
SIDE ENTRY MIXER
SUBMERSIBLE PUMP
CENTRIFUGAL BLOWER
CENTRIFUGAL PUMP
CHEMICAL METERING PUMP
BASKET STRAINER
DIAPHRAGM PUMP
PROGRESSING CAVITY PUMP
SLIDE GATE
ROTARY LOBE BLOWER
STATIC MIXER
SELF-PRIMING CENTRIFUGAL PUMP
ROTARY COMPRESSOR
TRENCH DRAIN
UNION
POLYMER MIXER

EQUIPMENT & COMPONENT NUMBERING CONVENTION

FDR - 210B

- ALPHA SUFFIX
- SEQUENTIAL NUMBER
- COMPONENT IDENTIFIE

EQUIPMENT — EQUIPMENT WILL BE PURCHASED BY TAG NUMBER AND WILL NOT REQUIRE A MATERIAL ID.

PIPING COMPONENTS — PIPING VALVES AND MISCELLANEOUS PIPING COMPONENTS SUCH AS TRAPS AND STRAINERS WILL BE PURCHASED BY MATERIAL ID. THIS MATERIAL ID WILL BE SHOWN DIRECTLY BELOW THE TAG NUMBER.

LINE NUMBERING CONVENTION

214 - CS1-3"-N

- INSULATION CLASS
  - 10AS — ANTI-SWEAT
  - 11FRZ — ELECTRIC TRACE (WINTERIZATION & INSULATE FOR FREEZE PROTECTION
  - 1-9 — THERMAL INSULATE BASED ON OPERATING TEMPERATURE
  - N OR BLANK — NONE
  - IP-9P — PERSONAL PROTECTION BASED ON OPERATING TEMPERATURE
- NOMINAL SIZE OF PIPE
- PIPE SPEC ID
- SEQUENTIAL NUMER

EQUIPMENT COMPONENT IDENTIFIERS

ABS	ABSORBER
ACT	ACTIVATOR
ACC	ACCUMULATOR
AER	AERATOR
AGT	AGITATOR
AV	ACTUATED VALVE
AHU	AIR HANDLING UNIT
ACU	AIR CONDITIONING PACKAGE UNIT
AL	AIR LOCK
ASLD	AIR SLIDE
ANN	ANNUNCIATOR
ATZ	ATOMIZER
ATM	ATTEMPERATOR
BSN	BASIN
BIN	BIN
BS	BLIND SPACER
BLO	BLOWER
BLR	BOILER
CHU	CHILLER UNIT
CHL	CHLORINATOR
CLF	CLARIFIER
CLW	CLEARWELL
CL	COIL
COL	COLLECTOR
CMP	COMPRESSOR
COND	CONDITIONER
CDU	CONDENSING UNIT
CONR	CONDITIONER
CONT	CONTAINMENT
CNVR	CONVEYOR
CLR	COOLER
CTW	COOLING TOWER
CPN	CORROSION COUPON
COUP	COUPLING
CRN	CRANE
CRSH	CRUSHER
CYCL	CYCLONE
CLDR	CYLINDER
DMP	DAMPER
DEA	DEAERATOR
DCB	DECARBONATOR
DHU	DEHUMIDIFIER
DN	DEMINERALIZER
DSH	DESUPERHEATER
DRUM	DRUM
DRY	DRYER
DCOL	DUST COLLECTOR
ECON	ECONOMIZER
EDR	EDUCATOR
ENG	ENGINE
EJR	EJECTOR
EC	ELECTROLYTIC CELL
EVAP	EVAPORATOR
EXC	EXCITER
FAN	FAN
FAR	FLAME ARRESTOR
FCL	FLUID COUPLING
FDR	FEEDER
FLT	FILTER
GEN	GENERATOR
GSC	GLAND STEAM CONDENSER
HTR	HEATER
HX	HEAT EXCHANGER
HCL	HEATING COIL
HST	HOIST
HOOD	HOOD
HPR	HOPPER
HUM	HUMIDIFIER
IGN	IGNITOR
IX	ION EXCHANGER
LSL	LINK SEAL
LVR	LOUVER
LU	LUBRICATOR
MH	MANHOLE
MEL	MIST ELIMINATOR
MX	MIXER
OGN	OIL GUN
POND	POND
PCP	PRECIPITATOR
PRS	SLUDGE FILTER PRESS
PVR	PULVERIZER
P	PUMP
PFR	PURIFIER
RCV	RECEIVER
RGTR	REGENERATOR
RH	REHEATER
RPD	RUPTURE DISK
SAMPLER	SAMPLER
SPNL	SAMPLE PANEL
SCN	SCREEN
SEP	SEPARATOR
SILO	SILO
SLR	SLAKER
SKID	SKID
SKR	SKIMMER
SBLO	SOOT BLOWER
STK	STACK
STKR	STACKER
STR	STRAINER
STRC	STACKER/RECLAIMER
SJAE	STEAM JET AIR EJECTOR
SUMP	SUMP
SH	SUPERHEATER
SF	SUPPLY FAN
TK	TANK
TWR	TOWER
TRB	TURBINE
TGR	TURNING GEAR
VAR	VAPOR ARRESTOR
VX	VAPOR EXTRACTOR
VAV	VARIABLE AIR VOLUME
WDW	WINDOW
WIN	WINCH

BUILDING BREAKS

BH	BAGHOUSE
BB	BOILER BUILDING
CH	COAL HANDLING
CB	CRUSHER BUILDING
CSB	COAL STORAGE BUILDING
DB	DIESEL GENERATOR BUILDING
FPH	FIRE PUMP HOUSE
FSB	FUEL SCREENING BUILDING
LP	LIMESTONE PREP BUILDING
PH	PUMP HOUSE
RF	ROOF
SB	SERVICE BAY
TB	TURBINE BUILDING
UG	UNDERGROUND
VH	VALVE HOUSE
WB	WATER TREATMENT BUILDING
WH	WAREHOUSE
YD	YARD
IS	INTAKE STRUCTURE

PIPE LINE CLASSES

AA B C

- PIPE SIZE
- PRESSURE RATING
- MATERIAL

MATERIAL

CM	CHROME/MOLY	NI	NICKEL
CN	CONCRETE	KY	KYNAR
CP	CPVC	PE	HDPE DR11 (4710)
CS	CARBON STEEL	PP	POLYPROPYLENE LINED STEEL
CU	COPPER	PV	PVC
DI	DUCTILE IRON	RF	FIBERGLASS
FG	FIBERGLASS	SS	STAINLESS STEEL
GS	GALVANIZED STEEL	ST	STEEL TUBING

PRESSURE RATING

0	125 LB.
1	150 LB
2	250 LB
3	300 LB

SYSTEM NAMES & ABREVIATIONS

AC	HEATING VENTILATION & AIR CONDITIONING
AH	ASH CONDITIONING
AS	AUXILIARY STEAM
BB	BOILE[illegible]N
BF	BOILER FUEL
BG	BOILER [illegible] GAS
BS	BOILER STEAM
CA	COMPRESSED AIR
CC	CLOSED COOLING
CO	CARBON DIOXIDE
CH	COAL HANDLING
CM	CONDENSATE
CS	CONDENSATE MAKEUP & STORAGE
CT	CHEMICAL TREATMENT
CV	CONDENSER, VACUUM
CW	CONDENSER CIRCULATING WATER
DW	DEMINERALIZED WATER
FC	FLUE GAS CLEANING
FO	IGNITION OIL
FP	FIRE PROTECTION
FW	FEEDWATER
GH	GENERATOR HYDROGEN
GS	GENERATOR SEAL OIL
HB	HEATER BLEED
HD	HEATER DRAIN
HR	HEATER RELIEF
HV	HEATER VENT
IA	CONTROL AIR INSTRUMENT AIR
LS	LIMESTONE HANDLING
LT	TURBINE LUBE AND HYDRAULIC OIL
MW	MAKEUP WATER
PD	PLANT DRAINS
PW	POTABLE WATER
RD	ROOF DRAINS
RS	RAW SEEP
RW	RAW WATER
SA	SERVICE AIR
SC	STATOR COOLING
SS	SANITARY SEWER
TG	TURBINE GENERATOR
TL	TURBINE LEAK OFF AND STEAM SEAL
WT	WASTEWATER TREATMENT
WW	WASH WATER

NOT FOR CONSTRUCTION

STATE OF MISSOURI — IVAN COOPER — NUMBER PE-2003009211 — PROFESSIONAL ENGINEER

REVISION RECORD

NO	DATE	DESCRIPTION
0	####	####
1	####	####
2	####	####
3	####	####
4	####	####
5	####	####
6	####	####
7	####	####
8	####	####

Civil & Environmental Consultants, Inc.
4848 Park 370 Blvd., Suite F • Hazelwood, MO 63042
314-656-4566 · 866-250-3679
www.cecinc.com

BRIDGETON LANDFILL, LLC
13570 ST. CHARLES ROCK ROAD
BRIDGETON, MO 63044
PHONE: (314) 744-8195
FAX: (314) 656-2107

BRIDGETON LANDFILL
13570 ST. CHARLES ROCK ROAD
PROCESS PIPING & INSTRUMENTATION LEGEND

DATE:	DRAFT	DRAWN BY: JKS
DWG SCALE:	DRAFT	CHECKED BY: DRAFT
PROJECT NO:		DRAFT
APPROVED BY:		DRAFT

DRAWING NO.: P-200

\\SVR-STLOUIS\PROJECTS\201\11.30-4941-2400\DWG\PHASE01\30484-P200.DWG LAST SAVED BY:(KSTILLS) - 8/29/2013 11:22:47 AM, LAST PRINTED BY:(KSTILLS, KEITH) - 8/29/2013 4:04:41 PM

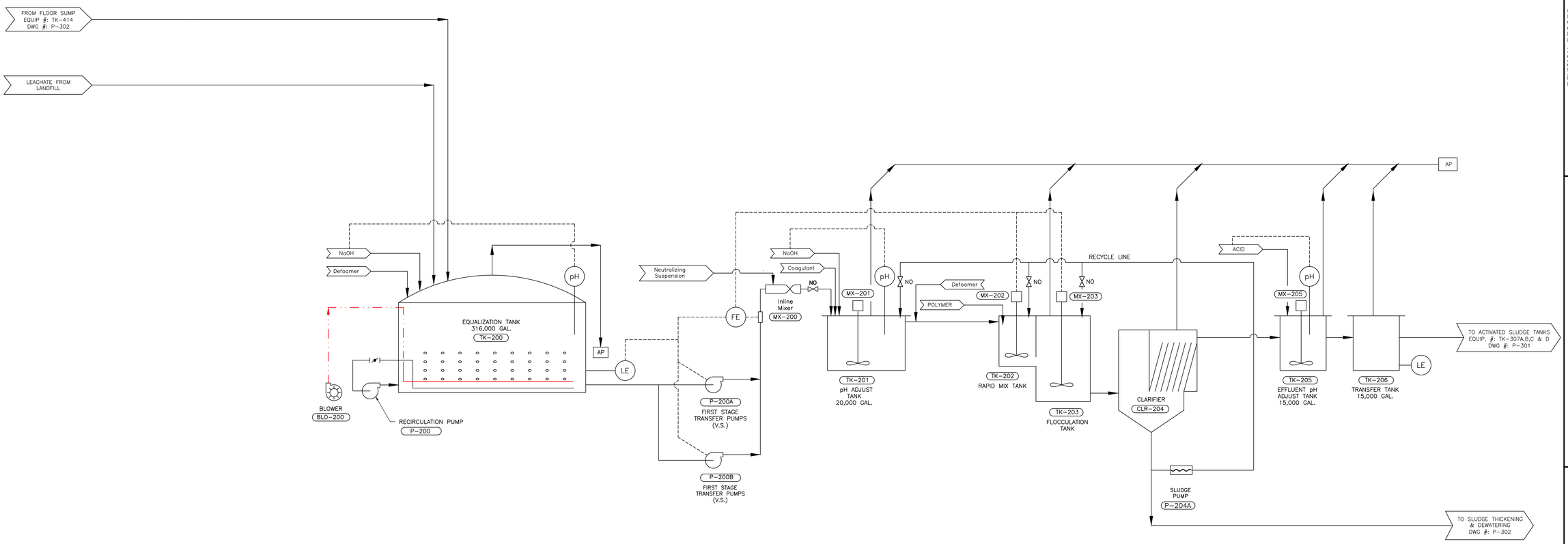

LEGEND

	CONTROL		VALVE
	SEEP WATER / WASTEWATER	C	CONTROL VALVE
	CHEMICAL		PROGRESSING CAVITY PUMP
	AIR (PLANT)		CENTRIFUGAL BLOWER
	SLUDGE		CENTRIFUGAL PUMP
	AIR (PROCESS)		DIAPHRAGM PUMP
V.S.	VARIABLE SPEED	AP	AIR PURIFICATION
DO	DO PROBE		
LE	LEVEL ELEMENT		
FE	FLOWMETER		
pH	pH CONTROL		

NOT FOR CONSTRUCTION

STATE OF MISSOURI
IVAN COOPER
NUMBER PE-2003009211
PROFESSIONAL ENGINEER

REVISION RECORD

NO	DATE	DESCRIPTION

Civil & Environmental Consultants, Inc.
4848 Park 370 Blvd., Suite F - Hazelwood, MO 63042
314-656-4566 · 866-250-3679
www.cecinc.com

BRIDGETON LANDFILL, LLC
13570 ST. CHARLES ROCK ROAD
BRIDGETON, MO 63044
PHONE: (314) 744-8195
FAX: (314) 656-2107

BRIDGETON LANDFILL
13570 ST. CHARLES ROCK ROAD
PROCESS FLOW DIAGRAM

DATE:	JULY 2013	DRAWN BY:	JKS
DWG SCALE:	NOT TO SCALE	CHECKED BY:	DRAFT
PROJECT NO:			130-484
APPROVED BY:			DRAFT

DRAWING NO.:
P-300

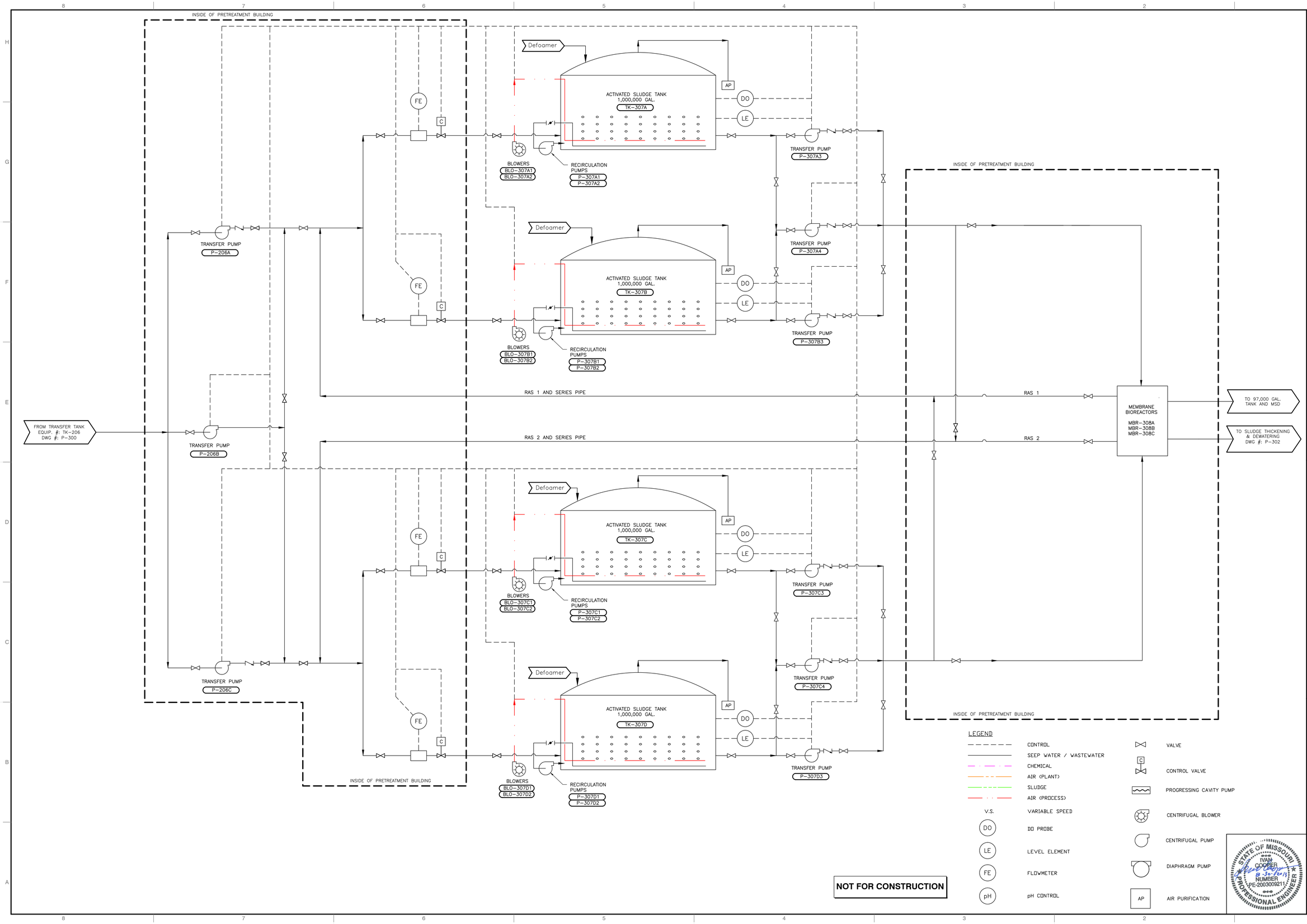

REVISION RECORD

NO	DATE	DESCRIPTION
*	****	****
*	****	****
*	****	****
*	****	****
*	****	****
*	****	****
*	****	****
*	****	****

Civil & Environmental Consultants, Inc.
4848 Park 370 Blvd., Suite F - Hazelwood, MO 63042
314-656-4566 · 866-250-3679
www.cecinc.com

BRIDGETON LANDFILL, LLC
13570 ST. CHARLES ROCK ROAD
BRIDGETON, MO 63044
PHONE: (314) 744-8195
FAX: (314) 656-2107

BRIDGETON LANDFILL
13570 ST. CHARLES ROCK ROAD
PROCESS FLOW DIAGRAM

DATE:	JULY 2013	DRAWN BY:	JKS
DWG SCALE:	NOT TO SCALE	CHECKED BY:	DRAFT
PROJECT NO:			130-484
APPROVED BY:			DRAFT

DRAWING NO.: P-301

SHEET 2 OF 3

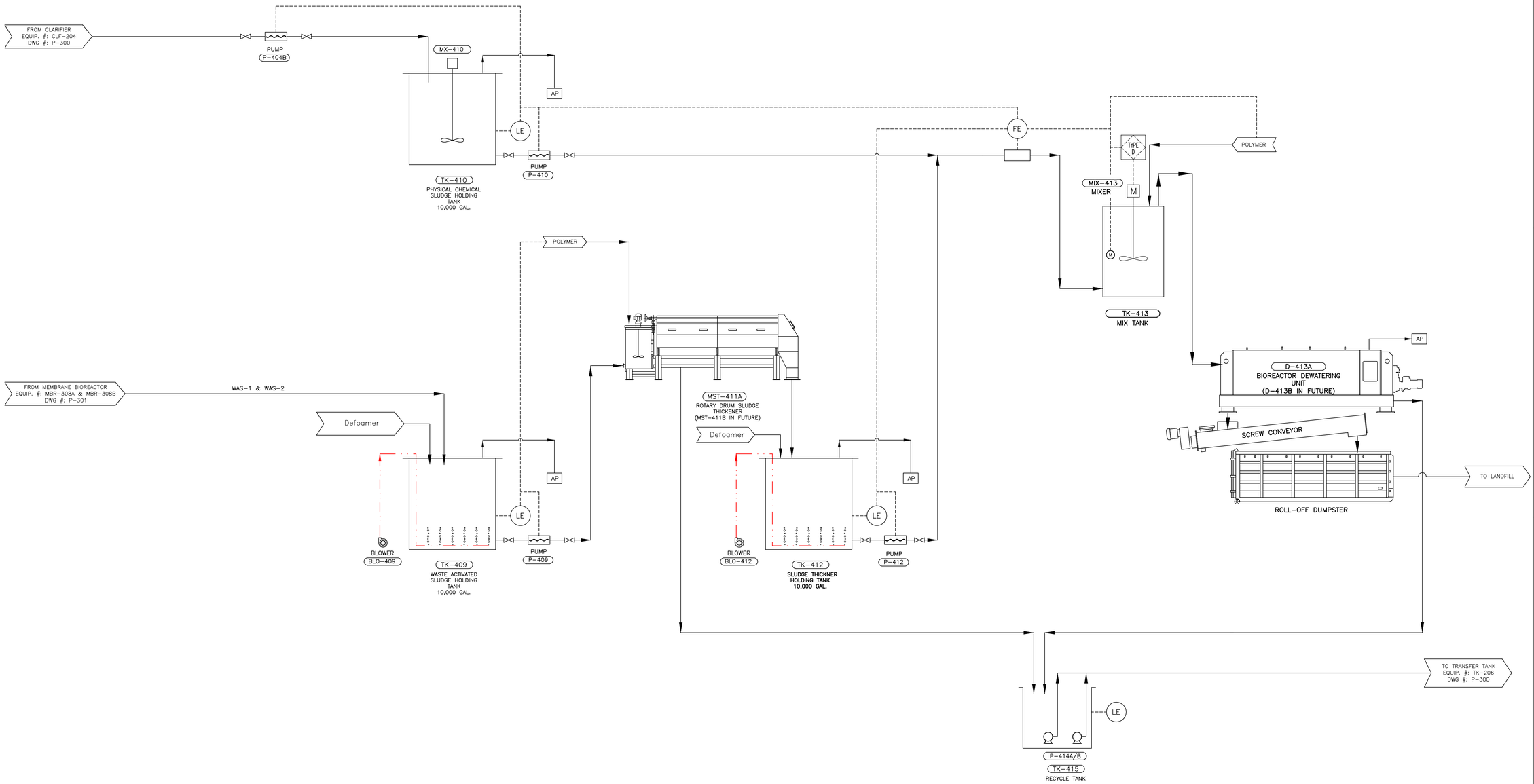

LEGEND

----------	CONTROL
————	SEEP WATER / WASTEWATER
—·—·—	CHEMICAL
—··—··—	AIR (PLANT)
—···—···—	SLUDGE
—·····—	AIR (PROCESS)
V.S.	VARIABLE SPEED
DO	DO PROBE
LE	LEVEL ELEMENT
FE	FLOWMETER
pH	pH CONTROL
	VALVE
C	CONTROL VALVE
	PROGRESSING CAVITY PUMP
	CENTRIFUGAL BLOWER
	CENTRIFUGAL PUMP
	DIAPHRAGM PUMP
AP	AIR PURIFICATION
M	MOTOR

NOT FOR CONSTRUCTION

STATE OF MISSOURI
IVAN COOPER
NUMBER
PE-2003009211
PROFESSIONAL ENGINEER
8-30-2013

REVISION RECORD

NO	DATE	DESCRIPTION
1	7-24-13	REMOVED BLOWER AND AERATION FROM HOLDING TANK (TK-410) & INSTALLED MIXER (MX-410)
#	####	####
#	####	####
#	####	####
#	####	####
#	####	####
#	####	####
#	####	####
#	####	####

Civil & Environmental Consultants, Inc.
4848 Park 370 Blvd., Suite F • Hazelwood, MO 63042
314-656-4566 · 866-250-3679
www.cecinc.com

BRIDGETON LANDFILL, LLC
13570 ST. CHARLES ROCK ROAD
BRIDGETON, MO 63044
PHONE: (314) 744-8195
FAX: (314) 656-2107

BRIDGETON LANDFILL
13570 ST. CHARLES ROCK ROAD
PROCESS FLOW DIAGRAM

DATE:	JULY 2013	DRAWN BY:	JKS
DWG SCALE:	NOT TO SCALE	CHECKED BY:	DRAFT
PROJECT NO:			130-484
APPROVED BY:			DRAFT

DRAWING NO.:
P-302

\\SVR-STLCIVIL\PROJECTS\2013\130-484\-CADD\DWGS\PNAGEN\130484-P302.DWG LAST SAVED BY:(MAGEN) - 8/29/2013 3:55:31 PM, LAST PRINTED BY:(STILLS, KEITH) - 8/29/2013 4:46:18 PM

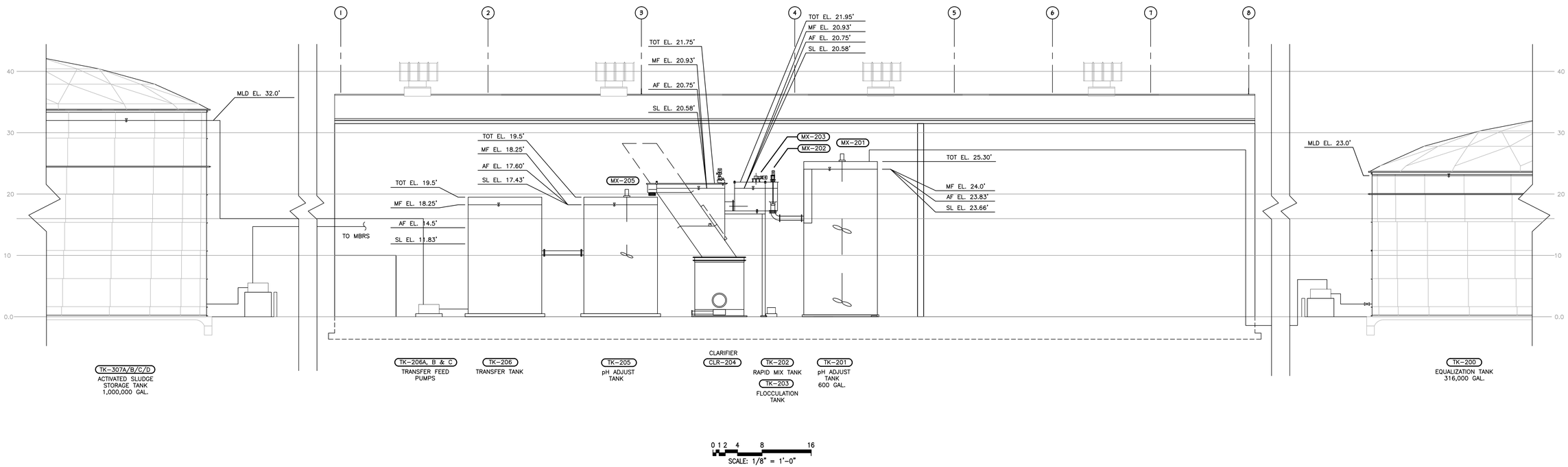

LEGEND

TOT – TOP OF TANK ELEVATION
MF – MAXIMUM FLOW ELEVATION 150gpm
AF – AVERAGE FLOW ELEVATION 42gpm
HAL – HIGH ALARM LEVEL ELEVATION
HOL – HIGH OPERATING LEVEL ELEVATION
LOL – LOW OPERATING LEVEL ELEVATION
MLD – MAXIMUM LIQUID DEPTH
SL – STATIC WATER LEVEL ELEVATION

NOTE:
1. ELEVATIONS BASED ON 2" GROUT PADS UNDER STEEL BASE PLATES (CLARIFIER). 4" AND 6" CONCRETE PADS UNDER FLAT BOTTOM FRP TANKS. FLOOR ELEVATION = 0.0

NOT FOR CONSTRUCTION

STATE OF MISSOURI
IVAN COOPER
NUMBER PE-2003009211
PROFESSIONAL ENGINEER
8-30-2013

REVISION RECORD

NO	DATE	DESCRIPTION

Civil & Environmental Consultants, Inc.
4848 Park 370 Blvd., Suite F - Hazelwood, MO 63042
314-656-4566 · 866-250-3679
www.cecinc.com

BRIDGETON LANDFILL, LLC
13570 ST. CHARLES ROCK ROAD
BRIDGETON, MO 63044
PHONE: (314) 744-8195
FAX: (314) 656-2107

BRIDGETON LANDFILL
13570 ST. CHARLES ROCK ROAD
TREATMENT BUILDING
HYDRAULIC PROFILE

DATE: JUNE 2013	DRAWN BY: JKS
DWG SCALE: NOT TO SCALE	CHECKED BY: DRAFT
PROJECT NO: 130-484	APPROVED BY: DRAFT

DRAWING NO.: P-304

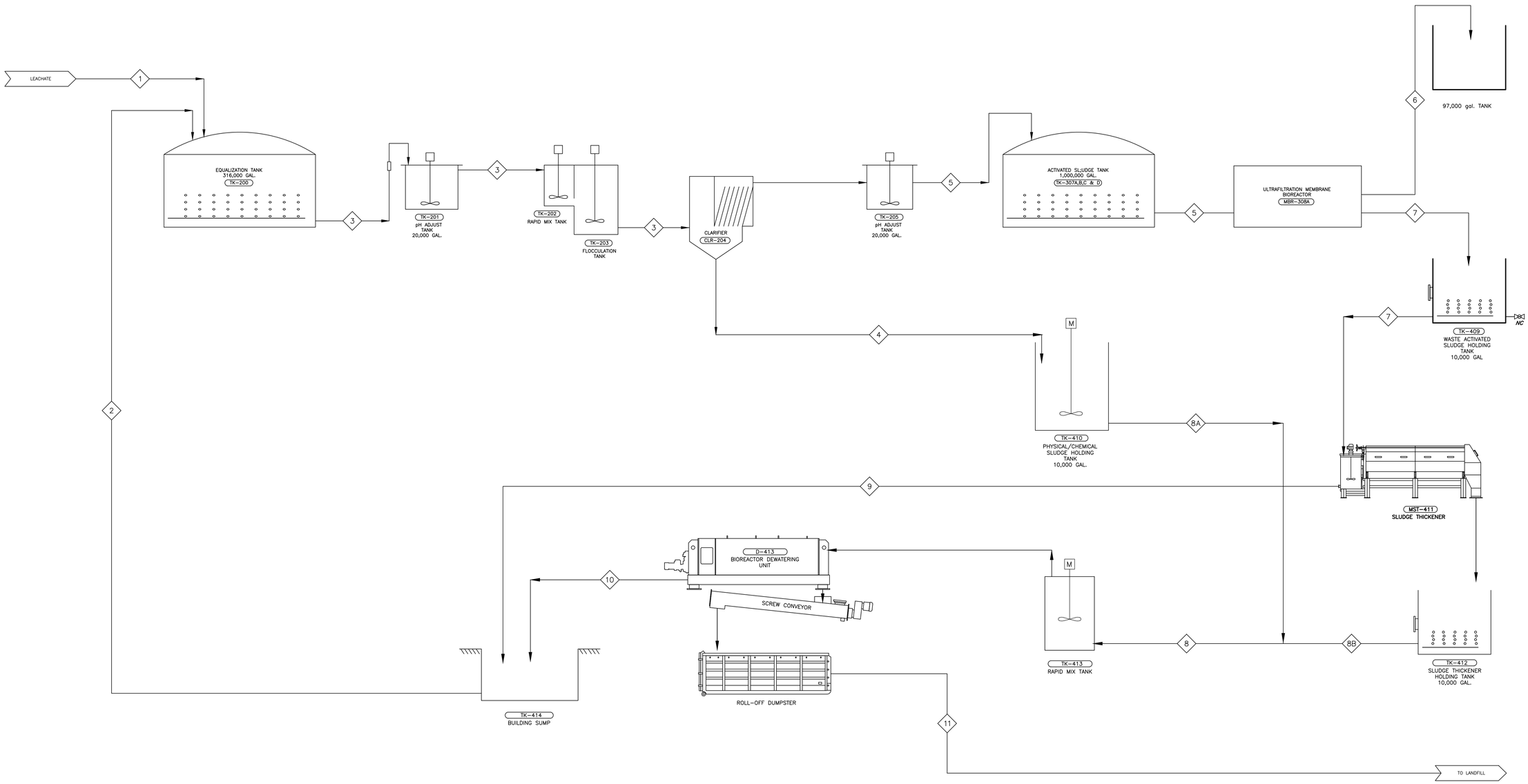

Stream No.	Stream Description	Max Flow (gpm)	Max Flow (gpd)	Max Flow (MGD)	Max Flow (gpm)	Average Flow (gpd)	Average Flow (MGD)	Tank	Detention Time (days)	Detention Time (hours)
1	From Leachate field to Equalization Tank	208.3	300,000	0.300	104.2	150,000	0.150	Equalization Tank	0.80	19.1
2	From Floor Sump to Equalization Tank	67.2	96,736	0.097	33.6	48,368	0.048			
3	From Equalization Tank to pH Adjust Tank to Clarifier	275.5	396,736	0.397	137.8	198,368	0.198	Clarifier*	0.02	0.53
4	From Clarifier to Phys/Chem Sludge Tank (P/C Sludge)	10.8	15,600	0.016	5.4	7,800	0.008	P/C Sludge Tank	0.64	15.39
5	From Clarifier to pH Adjust Tank to Transfer Tank to Aerobic Tanks	264.7	381,136	0.381	132.3	190,568	0.191	Aeration Tanks	9.85	236.51
6	From MBR to 97,000 gallon Tank to MSD	199.1	286,652	0.287	99.5	143,326	0.143	97K Tank	0.34	8.12
7	From MBR to WAS tank to Sludge Thickener (A Sludge)	65.6	94,484	0.094	32.8	47,242	0.047			
8A	Phys/Chem Sludge Tank to Sludge Dewatering (P/C Sludge)	10.8	15,600	0.016	5.4	7,800	0.008			
8B	Sludge Thickener to Sludge Dewatering (A Sludge)	26.2	37,794	0.038	13.1	18,897	0.019			
8	Combined Phys/Chem Sludge Tank and Sludge Thickener to Sludge Dewatering (P/C + A Sludge)	37.1	53,393	0.053	18.5	26,697	0.027			
9	From Sludge Thickener to Floor Sump	39.4	56,691	0.057	19.7	28,345	0.028	Floor Sump	0.03	0.74
10	From Sludge Dewatering to Floor Sump	27.8	40,045	0.040	13.9	20,022	0.020			
11	From Sludge Dewatering to Landfill (P/C + A Sludge)	9.3	13,348	0.013	4.6	6,674	0.007			

GENERAL NOTES:

1. LEACHATE INCLUDES MULTIPLE LEACHATE COLLECTION WELLS (LCS) SOURCES, MULTIPLE GAS WELL CONDENSATE (LS) SOURCES, AND GRIT TRAP OVERFLOWS.

NOT FOR CONSTRUCTION

STATE OF MISSOURI
IVAN COOPER
NUMBER PE-2003009211
PROFESSIONAL ENGINEER
8-30-2013

REVISION RECORD

NO	DATE	DESCRIPTION
#	####	
#	####	
#	####	
#	####	
#	####	
#	####	
#	####	
#	####	
#	####	
#	####	

Civil & Environmental Consultants, Inc.
4848 Park 370 Blvd., Suite F • Hazelwood, MO 63042
314-656-4566 · 866-250-3679
www.cecinc.com

BRIDGETON LANDFILL, LLC
13570 ST. CHARLES ROCK ROAD
BRIDGETON, MO 63044
PHONE: (314) 744-8195
FAX: (314) 656-2107

BRIDGETON LANDFILL
13570 ST. CHARLES ROCK ROAD
PROCESS FLOW DIAGRAM

DATE:	JULY 2013
DRAWN BY:	JKS
DWG SCALE:	NOT TO SCALE
CHECKED BY:	DRAFT
PROJECT NO:	130-484
APPROVED BY:	DRAFT

DRAWING NO.: P-305

\\SVR-STLDATA\PROJECTS\2013\130-484\-CADD\DWG\PHASE1\130484-P305.DWG LAST SAVED BY:(KSTILLS) - 8/28/2013 5:29:01 PM, LAST PRINTED BY:(STILLS, KEITH) - 8/28/2013 4:50:34 PM

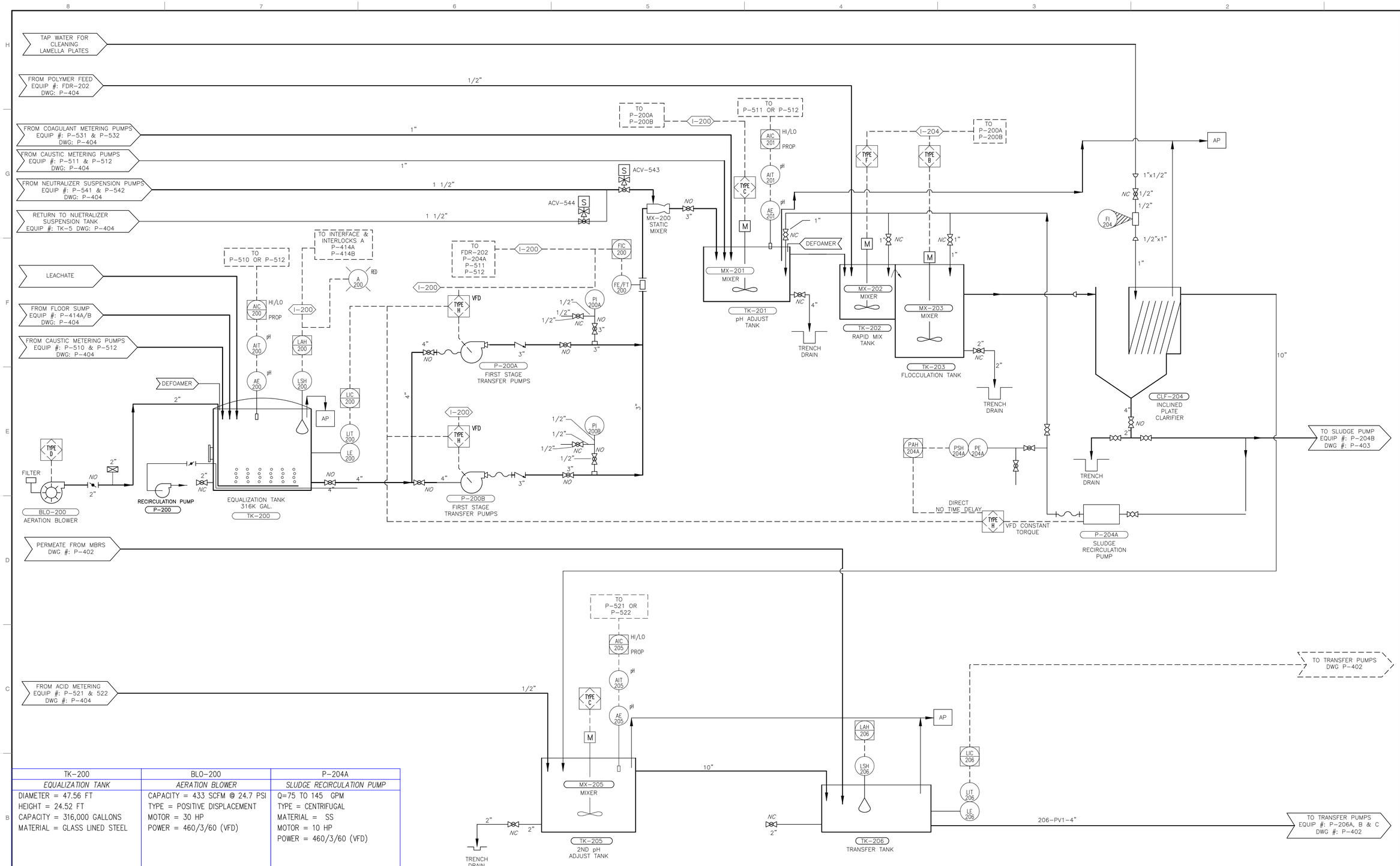

TK-200	BLO-200	P-204A
EQUALIZATION TANK	*AERATION BLOWER*	*SLUDGE RECIRCULATION PUMP*
DIAMETER = 47.56 FT	CAPACITY = 433 SCFM @ 24.7 PSI	Q=75 TO 145 GPM
HEIGHT = 24.52 FT	TYPE = POSITIVE DISPLACEMENT	TYPE = CENTRIFUGAL
CAPACITY = 316,000 GALLONS	MOTOR = 30 HP	MATERIAL = SS
MATERIAL = GLASS LINED STEEL	POWER = 460/3/60 (VFD)	MOTOR = 10 HP
		POWER = 460/3/60 (VFD)

TK-201	MX-201	TK-202 / TK-203	MX-202 / MX-203	CLF-204	P-200A/ P-200B	TK-205	MX-205	TK-206
pH ADJUSTMENT TANK	*pH ADJUSTMENT TANK*	*RAPID MIX AND FLOCCULATION TANK*	*RAPID MIX AND FLOCCULATION MIXERS*	*INCLINED PLATE CLARIFIER*	*INFLUENT FEED PUMPS #1 & #2*	*2ND pH ADJUST TANK*	*2ND pH ADJUSTMENT TANK MIXER*	*TRANSFER TANK*
DIAMETER = 12'-0" ID	MATERIAL = 316 SS	CAPACITY = 210/1,050 GALLONS	MATERIAL = 316 S.S.	MODEL = VC2500/55	Q= TBD GPM TDH = TBD FT	DIAMETER = 12'-0"	MATERIAL = 316 SS	DIAMETER = 12'-0"
HEIGHT = 25'-0"	MOTOR = 7.5 HP	MATERIAL = 316 S.S.	DRIVES = VFD	EFFECTIVE PLATE AREA = 2,500 Sq.ft.	TYPE = CENTRIFUGAL	HEIGHT = 19'-0"	MOTOR = 5 HP	HEIGHT = 19'-0"
CAPACITY = 20,000 GALLONS	POWER = 460/3/60	OPTIONS = COVER		ACTUAL PLATE AREA = 4,358 Sq. ft.	MATERIAL = SS	CAPACITY = 16,000 GALLONS	POWER = 460/3/60	CAPACITY = 16,000 GALLONS
MATERIAL = FRP	SHAFT = 3.5"X258" LONG			DIMENSIONS = 12'-6" WX	MOTOR = TBD HP	MATERIAL = FRP	SHAFT LENGTH = 2.5"X192" LONG	MATERIAL = FRP
OPTIONS = BAFFLES, COVER, CENTERMOUNT MIXER SUPPORT	IMPELLER = DUAL 56" A35 W/ STABILIZER FINS			28'-0" LX	POWER = 460/3/60 (VFD)	OPTIONS: BAFFLES, COVER, CENTERMOUNT MIXER SUPPORT	IMPELLERS: DUAL 50" A35 W/ STABILIZER RINGS	OPTIONS = COVER
				23'-6" HT				
				OPTIONS = COVER				

NOTE: SEE DRAWING P-200 FOR LEGENDS.

NOT FOR CONSTRUCTION

STATE OF MISSOURI — IVAN COOPER — NUMBER PE-2003009211 — PROFESSIONAL ENGINEER — 8-30-2013

REVISION RECORD

NO	DATE	DESCRIPTION
#	####	####
#	####	####
#	####	####
#	####	####
#	####	####
#	####	####
#	####	####
#	####	####
#	####	####

Civil & Environmental Consultants, Inc.
4848 Park 370 Blvd., Suite F • Hazelwood, MO 63042
314-656-4566 · 866-250-3679
www.cecinc.com

BRIDGETON LANDFILL, LLC
12976 ST. CHARLES ROCK ROAD
BRIDGETON, MO 63044
PHONE: (314) 744-8195
FAX: (314) 656-2107

BRIDGETON LANDFILL
13570 ST. CHARLES ROCK ROAD
PROCESS & INSTRUMENTATION DIAGRAM
COLLECTION SYSTEM

DATE:	AUGUST 2003
DRAWN BY:	JKS
DWG SCALE:	NOT TO SCALE
CHECKED BY:	DRAFT
PROJECT NO:	130-484
APPROVED BY:	DRAFT

DRAWING NO.: **P-401**

\\SVR-STLDGS\PROJECTS\2013\130-484\-CADD\DWG\PHASE01\130-484-P401.DWG LAST SAVED BY:(ADRIAN) - 8/29/2013 3:09:23 PM, LAST PRINTED BY:(STELLS, KEITH) - 8/29/2013 3:27:43 PM

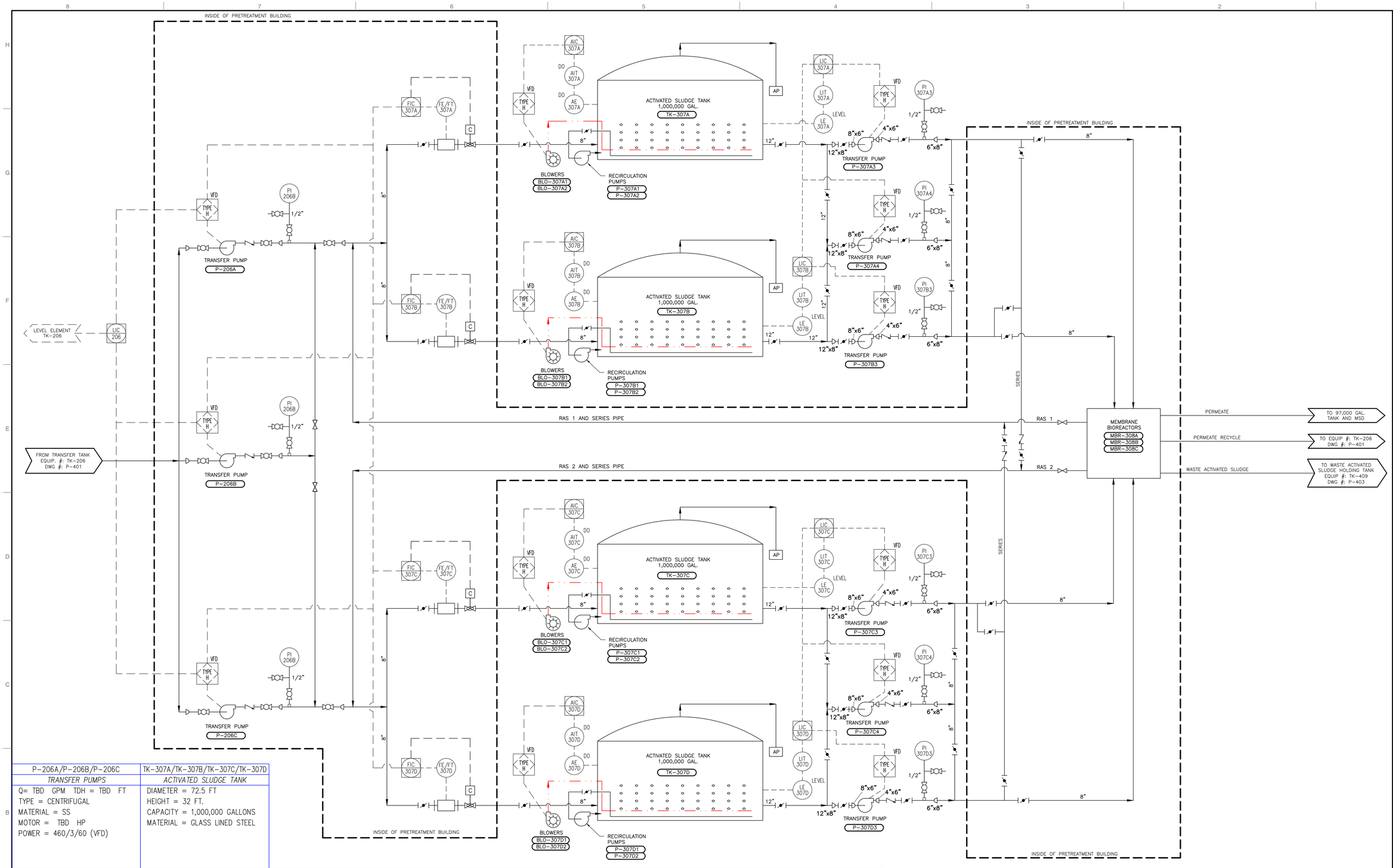

P-206A/P-206B/P-206C	TK-307A/TK-307B/TK-307C/TK-307D
TRANSFER PUMPS	*ACTIVATED SLUDGE TANK*
Q= TBD GPM TDH = TBD FT	DIAMETER = 72.5 FT
TYPE = CENTRIFUGAL	HEIGHT = 32 FT.
MATERIAL = SS	CAPACITY = 1,000,000 GALLONS
MOTOR = TBD HP	MATERIAL = GLASS LINED STEEL
POWER = 460/3/60 (VFD)	

BLO-307A1/BLO-307A2/BLO-307B1/BLO-307B2	BLO-307C1/BLO-307C2/BLO-307D1/BLO-307D2	P-307A1/P-307A2/P-307B1/P-307B2	P-307C1/P-307C2/P-307D1/P-307D2	P-307A3/P-307A4/P-307B3	P-307C3/P-307C4/P-307D3
AERATION BLOWERS	AERATION BLOWERS	*RECIRCULATION PUMPS*	*RECIRCULATION PUMPS*	*TRANSFER PUMPS*	*TRANSFER PUMPS*
CAPACITY = 2,140 SCFM @ 14.3 PSI	CAPACITY = 2,140 SCFM @ 14.3 PSI	Q= 6,588 GPM TDH = 32 FT	Q= 6,588 GPM TDH = 32 FT	Q= 500 GPM TDH = 45 FT	Q= 500 GPM TDH = 45 FT
TYPE = REGENERATIVE	TYPE = REGENERATIVE	TYPE = CENTRIFUGAL	TYPE = CENTRIFUGAL	TYPE = CENTRIFUGAL	TYPE = CENTRIFUGAL
MOTOR = 200 HP	MOTOR = 200 HP	MATERIAL = SS	MATERIAL = SS	MATERIAL = SS	MATERIAL = SS
POWER = 460/3/60	POWER = 460/3/60	MOTOR = 50 HP	MOTOR = 50 HP	MOTOR = 10 HP	MOTOR = 10 HP
		POWER = 460/3/60 (VFD)	POWER = 460/3/60 (VFD)	POWER = 460/3/60 (VFD)	POWER = 460/3/60 (VFD)

NOT FOR CONSTRUCTION

STATE OF MISSOURI
IVAN COOPER
NUMBER PE-2003009211
PROFESSIONAL ENGINEER
8-30-2013

REVISION RECORD

NO	DATE	DESCRIPTION
#	####	
#	####	
#	####	
#	####	
#	####	
#	####	
#	####	
#	####	
#	####	

Civil & Environmental Consultants, Inc.
4848 Park 370 Blvd., Suite F • Hazelwood, MO 63042
314-656-4566 · 866-250-3679
www.cecinc.com

BRIDGETON LANDFILL, LLC
12976 ST. CHARLES ROCK ROAD
BRIDGETON, MO 63044
PHONE: (314) 744-8195
FAX: (314) 656-2107

BRIDGETON LANDFILL
13570 ST. CHARLES ROCK ROAD
PROCESS FLOW DIAGRAM

DATE:	JULY 2013	DRAWN BY:	JKS
DWG SCALE:	NOT TO SCALE	CHECKED BY:	DRAFT
PROJECT NO:			130-484
APPROVED BY:			DRAFT

DRAWING NO.: P-402

\\SVR-STLDUS\PROJECTS\2013\130-484\-CADD\DWG\PHASE1\130484-P402.DWG LAST SAVED BY(KSTILLS) – 8/29/2013 8:21:51 AM, LAST PRINTED BY(STILLS, KEITH) – 8/29/2013 8:23:17 AM

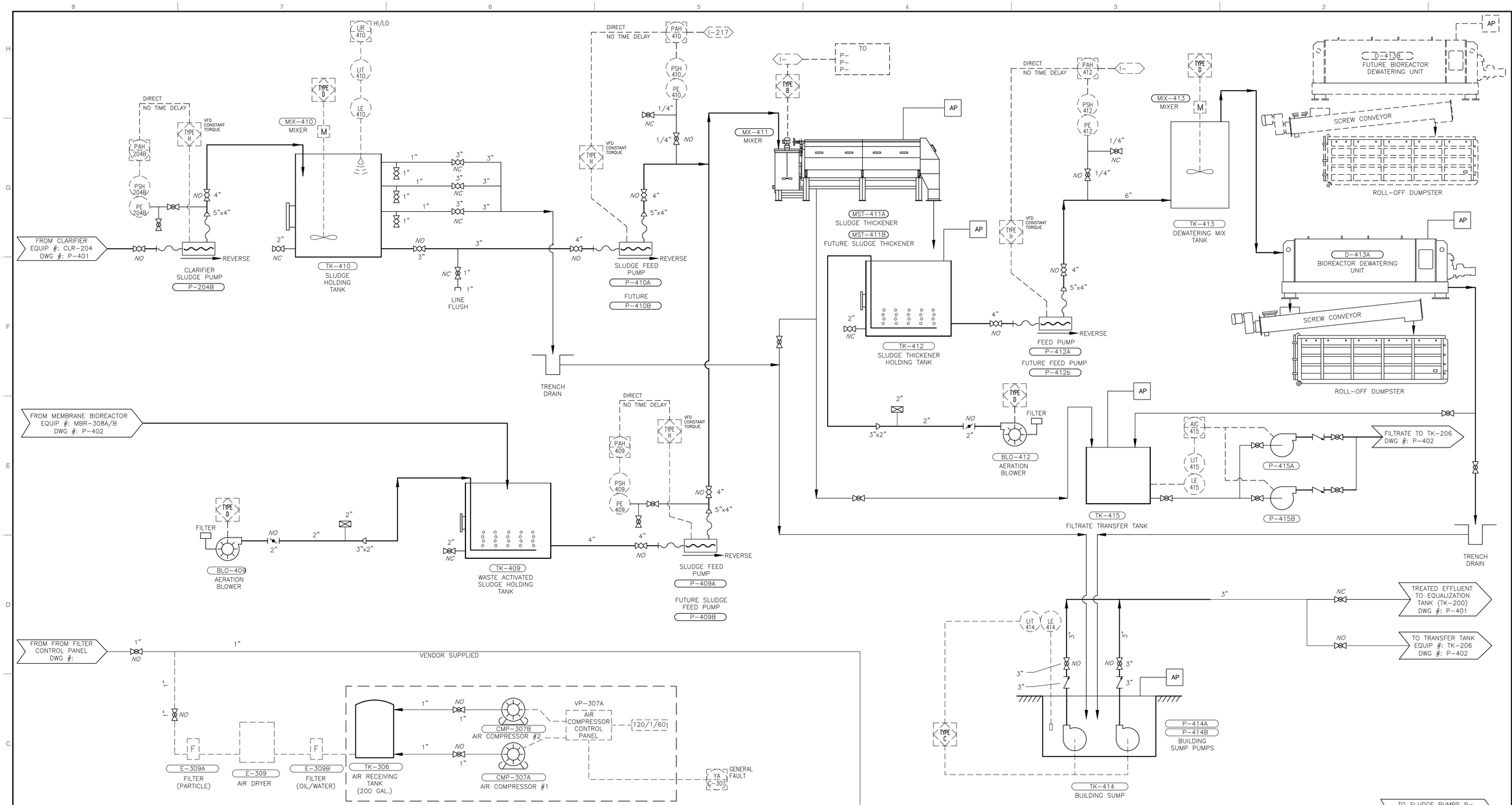

P-204B	CMP-307A/B	TK-409	P-409A	BLO-409	TK-410	P-410A	MIX-410	MST-411
CLARIFIER SLUDGE PUMP	*AIR COMPRESSOR*	*WASTE ACTIVATED SLUDGE HOLDING TANK*	*SLUDGE FEED PUMP*	*AERATION BLOWER*	*SLUDGE HOLDING TANK*	*SLUDGE FEED PUMP*	*SLUDGE HOLDING TANK MIXER*	*SLUDGE THICKNER*
Q = 75 TO 145 GPM TYPE = PROGRESSIVE CAVITY MATERIAL = 316 SS EPDM MOTOR = 10 HP, 480/3/60 POWER = 480/3/60	TYPE = DUPLEX RECIPROCATING MOTOR = 15 HP (2) POWER = 460/3/60 FLOW = 109 SCFM @ 100 psi	DIAMETER = 12'-0" HEIGHT = 12'-0"	Q = 75 TO 145 TYPE = PROGRESSIVE CAVITY MATERIAL = 316 SS EPDM MOTOR = 10 HP, 480/3/60 POWER = 480/3/60	CAPACITY = 75 SCFM @ PSI TYPE = REGENERATIVE MOTOR = 11.5 HP POWER = 480/3/60	DIAMETER = 12'-0" HEIGHT = 12'-0"	Q = 75 TO 145 GPM TYPE = PROGRESSIVE CAVITY MATERIAL = 316 SS EPDM MOTOR = 10 HP POWER = 480/3/60	MATERIAL = 316 S.S. MOTOR = 5 HP POWER = 480/3/60 IMPELLER = 57" A35 IMPELLER w/ STABILIZER FINS SHAFT LENGTH = 25" x 192"	CAPACITY = 150 GPM OF 1% to 3% SOLIDS MATERIAL = 316 SS

TK-412	BLO-412	P-412A	TK-413	MX-413	D-413	TK-414	P-414A / P-414B	P-415A/B	TK-415
SLUDGE THICKNER HOLDING TANK	*AERATION BLOWER*	*SLUDGE FEED PUMP*	*DEWATERING MIX TANK*	*DEWATERING MIX TANK MIXER*	*BIOREACTOR DEWATERING UNIT*	*BUILDING SUMP*	*BUILDING SUMP PUMPS*	*FILTRATE TRANSFER PUMPS*	*FILTRATE TRANSFER TANK*
DIAMETER = 12'-0" HEIGHT = 12'-0"	CAPACITY = 75 SCFM @ PSI TYPE = REGENERATIVE MOTOR = 11.5 HP POWER = 480/3/60	Q = 75 TO 145 GPM TYPE = PROGRESSIVE CAVITY MATERIAL = 316 SS EPDM MOTOR = 10 HP POWER = 480/3/60	CAPACITY = 60 – 110 GPM OR 660–1120 lbs DS/HR MATERIAL = 316 SS OPTIONS = RAPID MIX TANK	MATERIAL = 316 S.S. MOTOR = HP POWER = VARIABLE SPEED = SHAFT LENGTH =	CAPACITY = 60 – 110 GPM OR 660–1120 lbs DS/HR MATERIAL = 316 SS OPTIONS = RAPID MIX TANK	SIZE = 8'-0"W x8'-0"L x 8'-0"H CAPACITY = 3,000 GALLONS MATERIAL = CONCRETE	Q= TBD GPM, TDH= TBD FT TYPE = SUBMERSIBLE MATERIAL = 316 S.S. MOTOR = 15 HP POWER = 460/3/60	Q = TBD GPM, TDH = TBD FT TYPE = CENTRIFUGAL MATERIAL = 316 SS MOTOR = TBD HP POWER = 480/3/60	DIAMETER = 8'-0" HEIGHT = 8'-0" CAPACITY = 3,000 GAL. MATERIALS = FRP

NOT FOR CONSTRUCTION

NOTE:
SEE DRAWING P-200 FOR LEGENDS.

STATE OF MISSOURI
IVAN COOPER
NUMBER PE-2003009211
PROFESSIONAL ENGINEER

REVISION RECORD

NO	DATE	DESCRIPTION
0	####	####
1	####	####
2	####	####
3	####	####
4	####	####
5	####	####
6	####	####
7	####	####
8	####	####

Civil & Environmental Consultants, Inc.
4848 Park 370 Blvd., Suite F • Hazelwood, MO 63042
314-656-4566 · 866-250-3679
www.cecinc.com

BRIDGETON LANDFILL, LLC
13570 ST. CHARLES ROCK ROAD
BRIDGETON, MO 63044
PHONE: (314) 744-8195
FAX: (314) 656-2107

BRIDGETON LANDFILL
13570 ST. CHARLES ROCK ROAD
PROCESS & INSTRUMENTATION DIAGRAM
COLLECTION SYSTEM

DATE:	AUGUST 2013
DRAWN BY:	JKS
DWG SCALE:	NOT TO SCALE
CHECKED BY:	MIK
PROJECT NO:	130-484
APPROVED BY:	DRAFT

DRAWING NO.: **P-403**

\\SVR-STLDGES\PROJECTS\2013\130-484-CASOD\DWG\PHASE01\130484-P403.DWG LAST SAVED BY:(KSTILLS) - 8/29/2013 7:04:44 PM, LAST PRINTED BY:(STILLS, KEITH) - 8/29/2013 7:05:22 PM

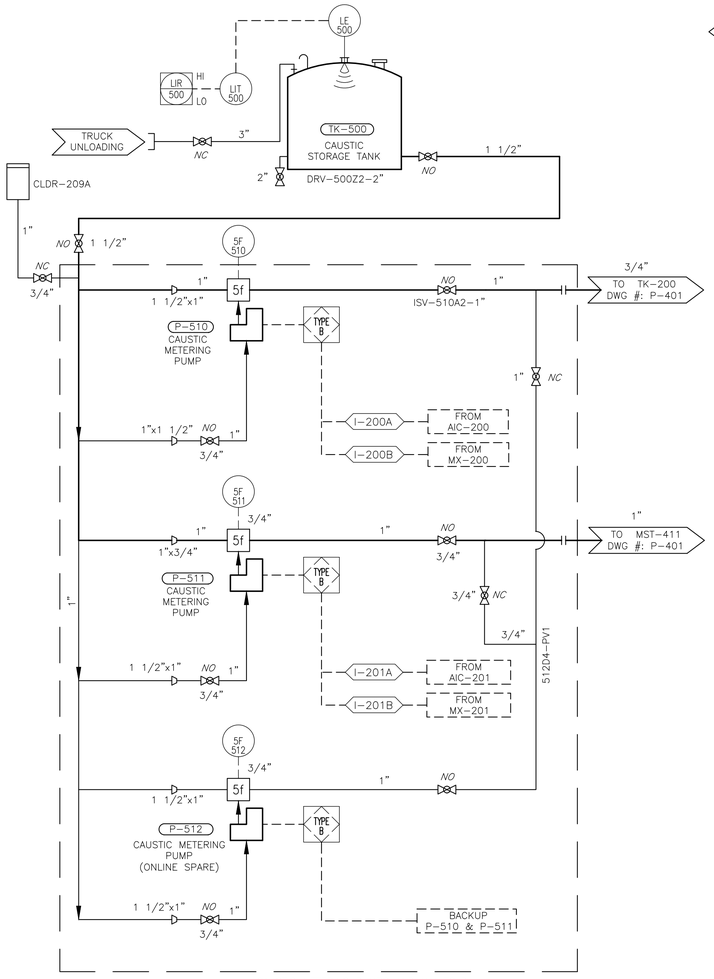

CAUSTIC METERING PUMPS AND MANIFOLD ASSEMBLY (VENDOR PACKAGE)

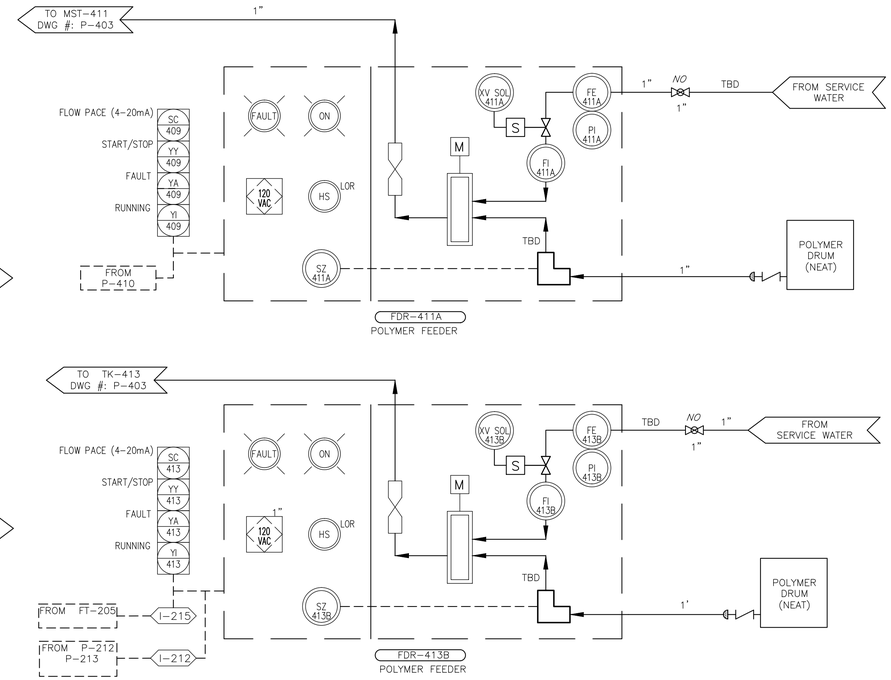

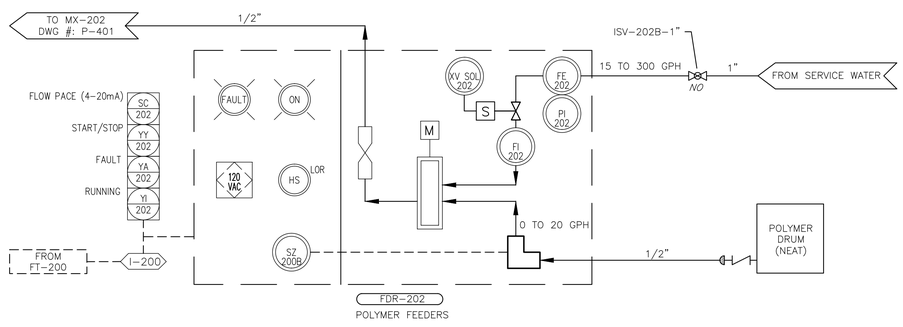

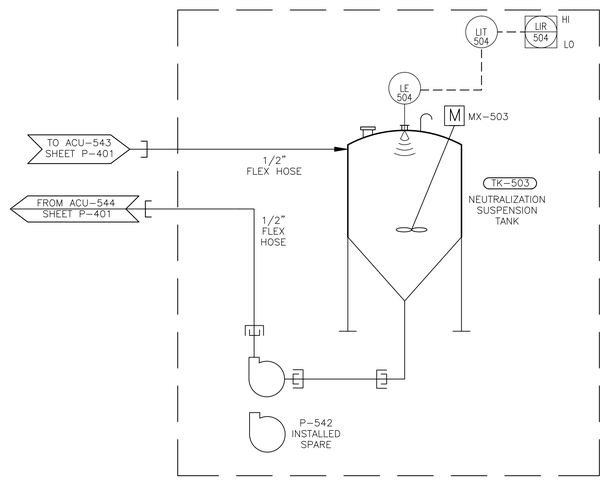

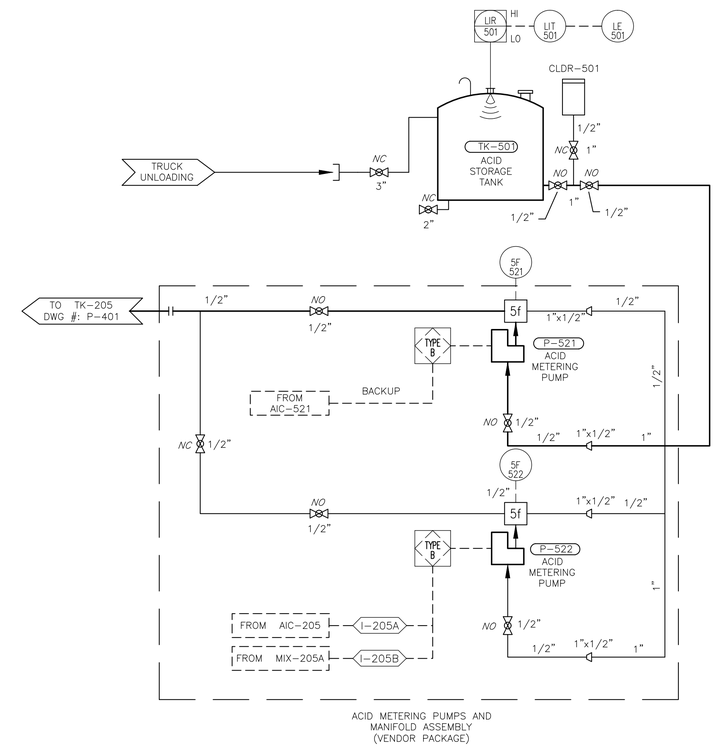

ACID METERING PUMPS AND MANIFOLD ASSEMBLY (VENDOR PACKAGE)

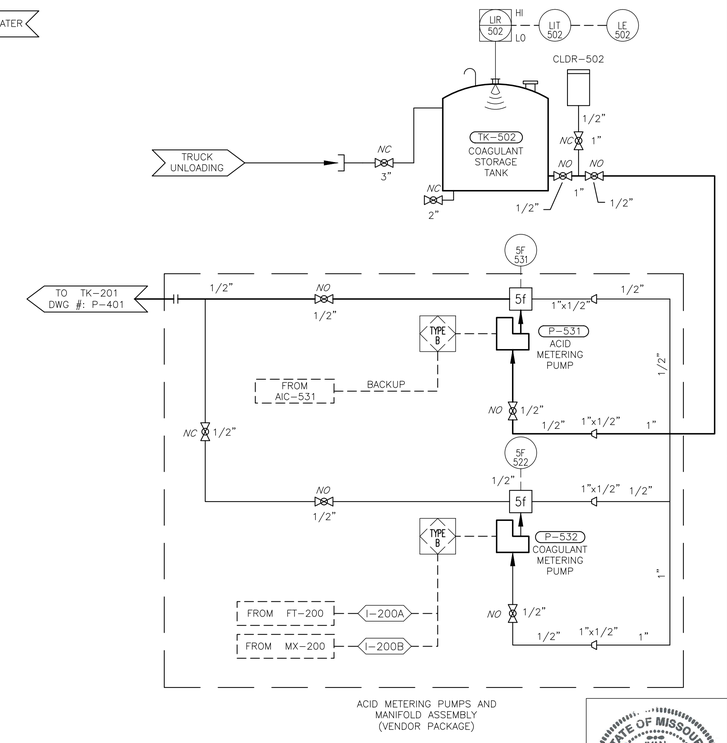

ACID METERING PUMPS AND MANIFOLD ASSEMBLY (VENDOR PACKAGE)

TK-501	P-531 & P-532	FDR-202	FDR-413B
ACID STORAGE TANK	*COAGULANT METERING PUMPS*	*POLYMER BLENDER FEEDER*	*POLYMER BLENDER FEEDER*
DIAMETER = 8'-6" HEIGHT = 12'-6" CAPACITY = 6,000 GALLONS MATERIAL = HDXLPE	DIAPHRAGM PUMPS Q=0-10 GPH, TDH=60 PSI CONTROL = MANUAL/AUTOMATIC POWER = 120/1/60	Q=0-20 GPD (NEAT) WATER Q=15-300 GPD CONTROL = POWER =	Q= WATER Q= CONTROL = POWER =
TK-503	**P-541 & P-542**	**FDR-411A**	**P-510 / P-511 / P-512**
NEUTRALIZING SUSPENSION TANK	*SUSPENSION CIRCULATION PUMPS*	*POLYMER BLENDER FEEDER*	*CAUSTIC METERING PUMPS*
DIAMETER = HEIGHT = CAPACITY = 6,000 GALLONS MATERIAL = POLYPROPYLENE	Q=0-60 GPH, TDH=50 PSI CONTROL = POWER =	Q= WATER = CONTROL = POWER =	DIAPHRAGM PUMPS Q=0-120 GPH TDH=60 PSI CONTROL = MANUAL/AUTOMATIC POWER = 120/1/60
TK-502	**MX-503**	**P-521 & P-522**	**TK-500**
COAGULANT STORAGE TANK	*SUSPENSION MIXER*	*ACID METERING PUMPS*	*CAUSTIC STORAGE TANK*
DIAMETER = 8'-6" HEIGHT = 12'-6" CAPACITY = 6,000 GALLONS MATERIAL = HDXLPE		DIAPHRAGM PUMPS Q=0-60 GPH TDH=60 PSI CONTROL = MANUAL/AUTOMATIC POWER = 120/1/60	DIAMETER = 8'-6" HEIGHT = 12'-6" CAPACITY = 6,000 GALLONS MATERIAL = HDXLPE

NOTE:
SEE DRAWING P-200 FOR LEGENDS.

NOT FOR CONSTRUCTION

STATE OF MISSOURI
IVAN COOPER
NUMBER PE-2003009211
PROFESSIONAL ENGINEER
8-30-13

REVISION RECORD

NO	DATE	DESCRIPTION
#	####	####
#	####	####
#	####	####
#	####	####
#	####	####
#	####	####
#	####	####
#	####	####

Civil & Environmental Consultants, Inc.
4848 Park 370 Blvd., Suite F • Hazelwood, MO 63042
314-656-4566 · 866-250-3679
www.cecinc.com

BRIDGETON LANDFILL, LLC
13570 ST. CHARLES ROCK ROAD
BRIDGETON, MO 63044
PHONE: (314) 744-8195
FAX: (314) 656-4117

BRIDGETON LANDFILL
13570 ST. CHARLES ROCK ROAD
PROCESS & INSTRUMENTATION DIAGRAM
COLLECTION SYSTEM

DATE:	AUGUST 2013	DRAWN BY:	JKS
DWG SCALE:	NOT TO SCALE	CHECKED BY:	DRAFT
PROJECT NO:			130-484
APPROVED BY:			DRAFT

DRAWING NO.:
P-404

\\SVR-STLOUIS\PROJECTS\2013\130-484\-CADD\DWG\PNID\P-404.DWG LAST SAVED BY:(MEDEN) - 8/28/2013 3:32:48 PM, LAST PRINTED BY:(STILLS, KEITH) - 8/28/2013 3:37:40 PM

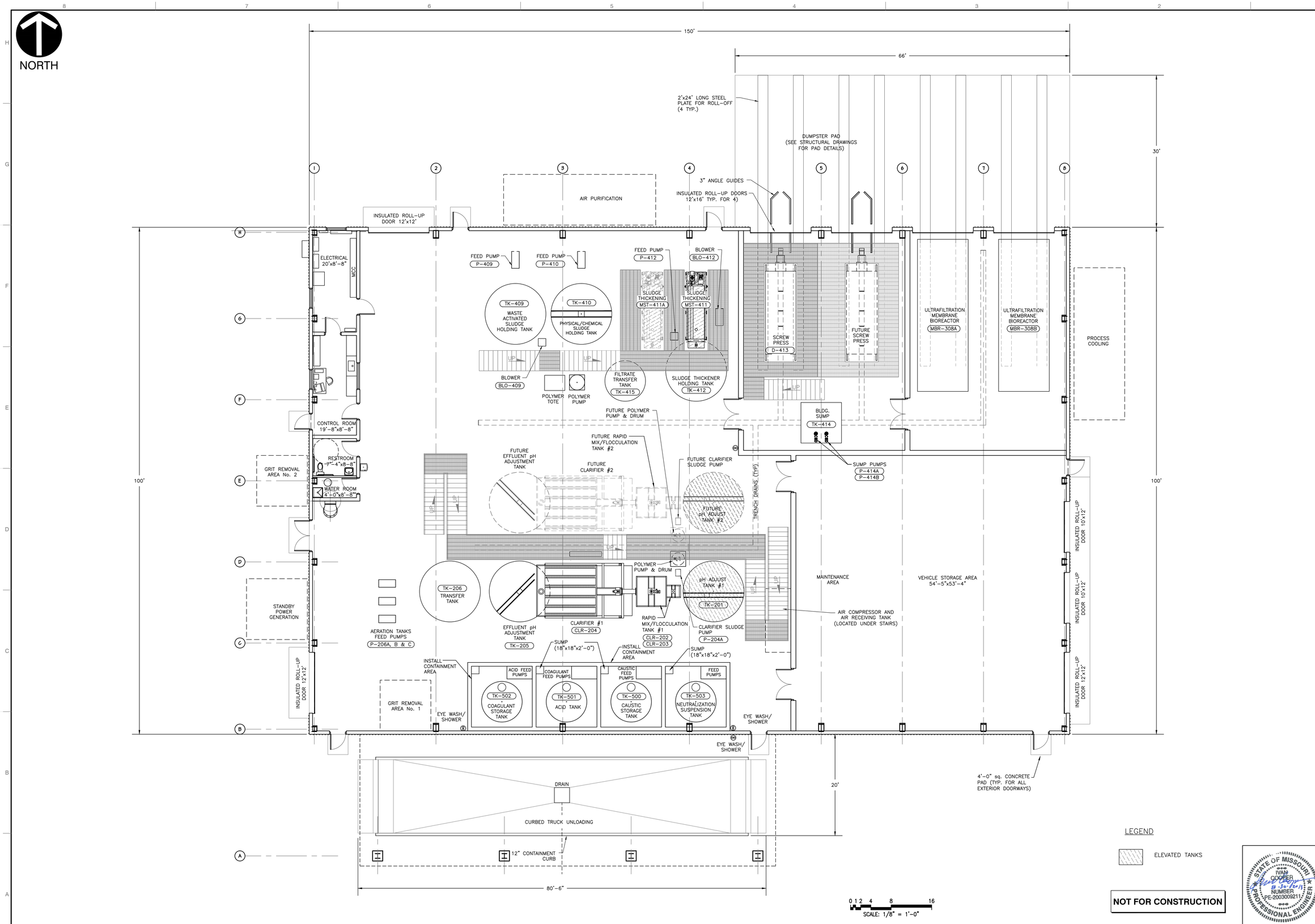

NOT FOR CONSTRUCTION

STATE OF MISSOURI
IVAN COOPER
NUMBER PE-2003009211
PROFESSIONAL ENGINEER

REVISION RECORD

NO	DATE	DESCRIPTION
*	####	####
*	####	####
*	####	####
*	####	####
*	####	####
*	####	####
*	####	####

Civil & Environmental Consultants, Inc.
4848 Park 370 Blvd., Suite F - Hazelwood, MO 63042
314-656-4566 · 866-250-3679
www.cecinc.com

BRIDGETON LANDFILL, LLC
13570 ST. CHARLES ROCK ROAD
BRIDGETON, MO 63044
PHONE: (314) 744-8195
FAX: (314) 656-2107

BRIDGETON LANDFILL
13570 ST. CHARLES ROCK ROAD
TREATMENT BUILDING
GENERAL ARRANGEMENT LAYOUT

DATE:	JULY 2013	DRAWN BY:	JKS
DWG SCALE:	1/8" = 1'-0"	CHECKED BY:	DRAFT
PROJECT NO:			130-484
APPROVED BY:			DRAFT

DRAWING NO.:
P-500

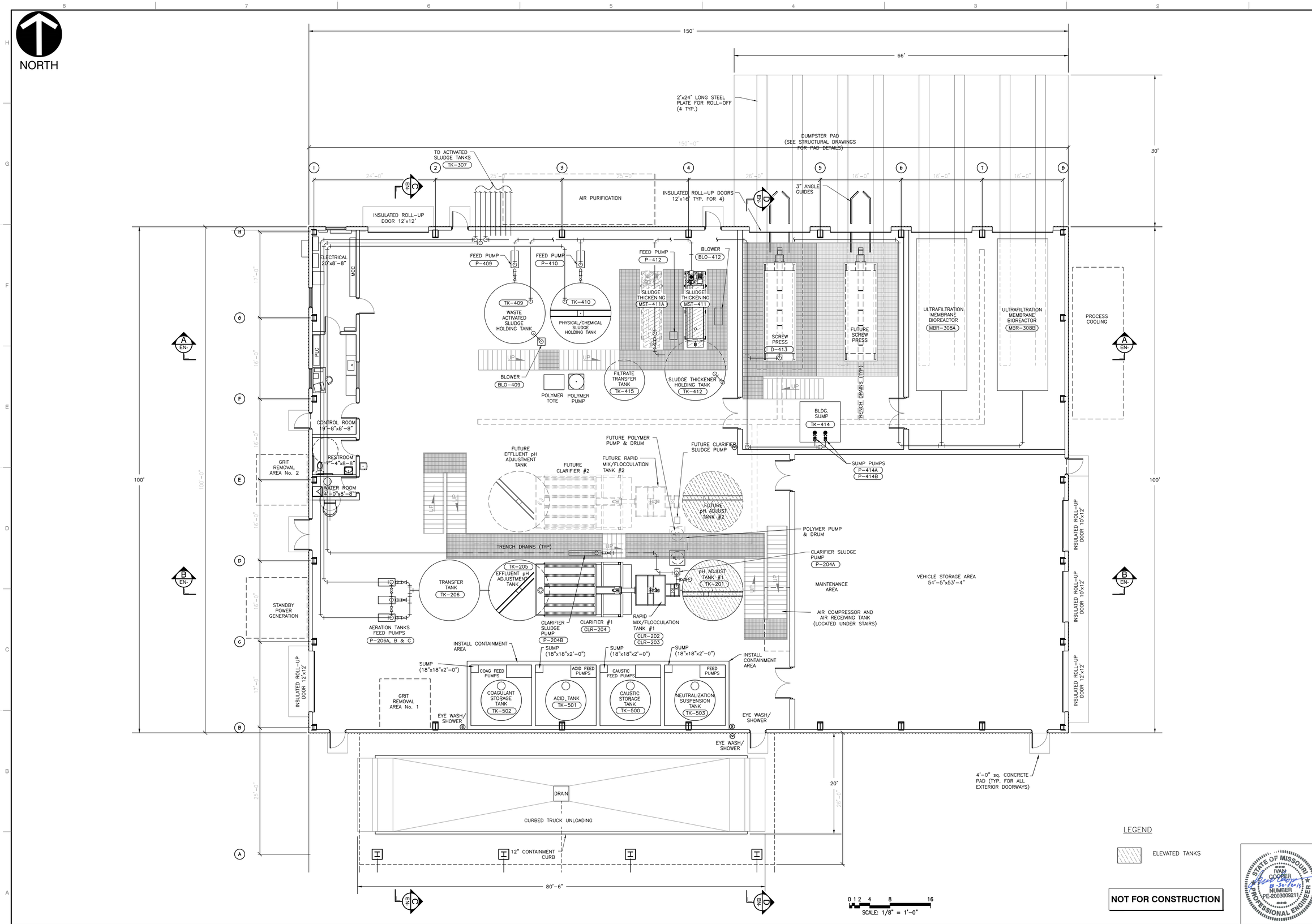

REVISION RECORD

NO	DATE	DESCRIPTION
*	####	####
*	####	####
*	####	####
*	####	####
*	####	####
*	####	####
*	####	####

Civil & Environmental Consultants, Inc.
4848 Park 370 Blvd., Suite F - Hazelwood, MO 63042
314-656-4566 · 866-250-3679
www.cecinc.com

BRIDGETON LANDFILL, LLC
13570 ST. CHARLES ROCK ROAD
BRIDGETON, MO 63044
PHONE: (314) 744-8195
FAX: (314) 656-2107

BRIDGETON LANDFILL
13570 ST. CHARLES ROCK ROAD
TREATMENT BUILDING
BUILDING PIPING LAYOUT

DATE:	JULY 2013	DRAWN BY:	JKS
DWG SCALE:	1/8" = 1'-0"	CHECKED BY:	DRAFT
PROJECT NO:			130-484
APPROVED BY:			DRAFT

STATE OF MISSOURI
IVAN COOPER
NUMBER PE-2003009211
PROFESSIONAL ENGINEER

DRAWING NO.:
P-501

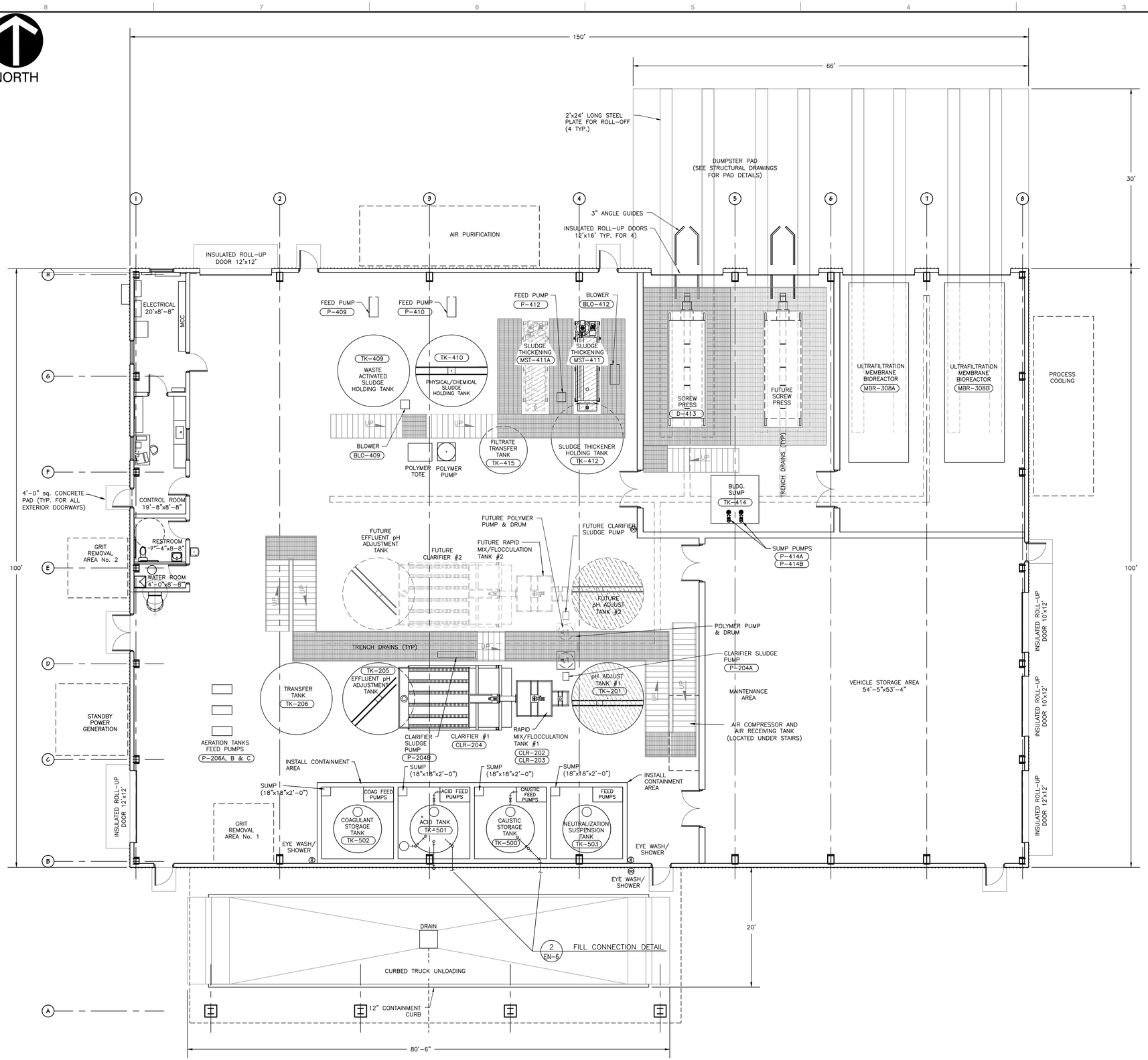

NOTES:

1. ALL ACID AND CAUSTIC PIPING TO BE INSTALLED WITH SPILL PAN UNDER PIPING AT PLATFORM AND OVER FRP TANKS. SPILL PAN TO DRAIN BACK TO PROCESS TANK. SIZE SPILL PAN FOR MIN. 3" WIDER THAN PIPING. SPILL PAN CAN BE USED FOR MULTIPLE CHEMICAL PIPES. ACID AND CAUSTIC PIPES DO NOT USE SAME SPILL PAN. ACID PAN TO BE STAINLESS STEEL OR ENGINEER APPROVED EQUAL. CAUSTIC PAN TO BE STAINLESS STEEL, PVC OR ENGINEER APPROVED EQUAL.
2. SEE VENDOR SHOP DRAWINGS FOR CAUSTIC AND ACID PUMP SKIDS.
3. UNLOADING AREA SUMP, ACID CONTAINMENT, AND CAUSTIC CONTAINMENT TO BE COATED. SEE SPECIFICATIONS.
4. VENT ACID STORAGE TANK OUTSIDE BUILDING. TERMINATE 6' ABOVE ROOF. TERMINATE WITH 6" CPVC RAIN CAP PLASTIC ENGINEERED PRODUCTS PART No. 330-060-D OR EQUAL.
5. ROUTE CHEMICAL SKID PIPING TO 12" INSIDE CONTAINMENT WALL. TIE IN OVERHEAD METAL PIPE TO SKID PIPE INSIDE CONTAINMENT. INSTALL ISOLATION VALVE AND TEE SERVICE DRAIN INSIDE CONTAINMENT AREA PER DETAIL 5 THIS SHEET.
6. SEE PIPE SCHEDULE FOR CHEMICAL LINE MATERIALS OF CONSTRUCTION.
7. TERMINATE ALL CHEMICAL LINES WITH FLANGE AND PLASTIC SCH 80 BALL VALVE (PVDF FOR ACID, PVC FOR CAUSTIC). TERMINATE APPROXIMATELY EQUAL WITH TOP OF TANK. LOCATE LINES MIN 12" INSIDE TANK WALL.
8. INSTALL ALL CHEMICAL LINES WITH MIN. 6" SLOPE, (ACID & CAUSTIC, 3" SLOPE) BACK TO CONTAINMENT AREA.
9. COVER TOP OF ACID PIPING WITH STAINLESS STEEL OR PVC COVER MIN 12" EACH SIDE OF CROSSING LINE. ANCHOR COVER WITH STAINLESS STEEL HOSE CLAMPS.
10. BUILDING GIRDERS AND ROOF PURLIN ZEE SHAPES CAN BE USED TO SUPPORT UTILITY TRAYS (CABLE TRAY & PIPES TRAY) AND PIPING OR CONDUITS WITH CONDITIONS AS FOLLOWS. ATTACHMENTS TO THE PURLINS SHALL BE MADE THROUGH THE HORIZONTAL BOTTOM FLANGE FACE WITHOUT DISTURBING THE UP-TURN AT THE EDGE OF THE FLANGE OPPOSITE OF THE WEB. A BAR OR UNISTRUT MEMBER CAN BE FASTENED (BOLTED) TO AT LEAST THREE OR MORE PURLINS, WITH THE HANGER RODS THEN ATTACHED TO THE BAR OR UNISTRUT MEMBER, NOT THE PURLIN. SINGLE POINT LOADS ON PURLINS ARE LIMITED TO A 50# MAXIMUM LOAD AT THE BOTTOM FLANGE AT ANY POINT ALONG THE PURLIN SPAN, BUT ARE TO BE AVOIDED. UNISTRUT MEMBERS TO SUPPORT THE LOAD, ATTACHED TO MULTIPLE PURLINS AS NOTED, IS THE REQUIRED ARRANGEMENT FOR LOADS CARRIED BY PURLINS.

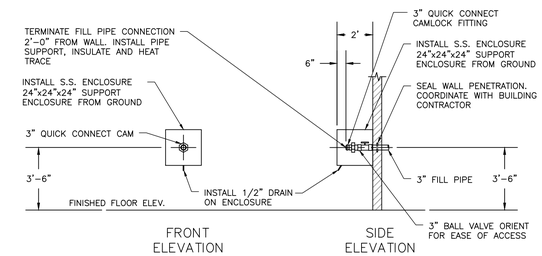

2 EN-6 FILL CONNECTION DETAIL
(ENCLOSURE DOOR NOT SHOWN FOR CLARITY)

LEGEND

ELEVATED TANKS

NOT FOR CONSTRUCTION

STATE OF MISSOURI
IVAN COOPER
NUMBER PE-2003009211
PROFESSIONAL ENGINEER

N.T.S.

REVISION RECORD

NO	DATE	DESCRIPTION
0	####	####
1	####	####
2	####	####
3	####	####
4	####	####
5	####	####
6	####	####
7	####	####
8	####	####
9	####	####

Civil & Environmental Consultants, Inc.
4848 Park 370 Blvd., Suite F • Hazelwood, MO 63042
314-656-4566 · 866-250-3679
www.cecinc.com

BRIDGETON LANDFILL, LLC
13570 ST. CHARLES ROCK ROAD
BRIDGETON, MO 63044
PHONE: (314) 744-8195
FAX: (314) 656-2107

BRIDGETON LANDFILL
13570 ST. CHARLES ROCK ROAD
TREATMENT BUILDING
CHEMICAL PIPING LAYOUT

DATE: JULY 2013	DRAWN BY: JKS
DWG SCALE: 1/8" =1'-0"	CHECKED BY: DRAFT
PROJECT NO: 130-484	
APPROVED BY: DRAFT	

DRAWING NO.: P-502

\\SVR-STLDUS\PROJECTS\2014\130-484\-CADD\DWG\PHASE01\30484-P502.DWG LAST SAVED BY(JKSTELLS) - 8/28/2013 2:51:27 PM, LAST PRINTED BY(JKSTELLS, KOTH) - 8/28/2013 4:17:55 PM

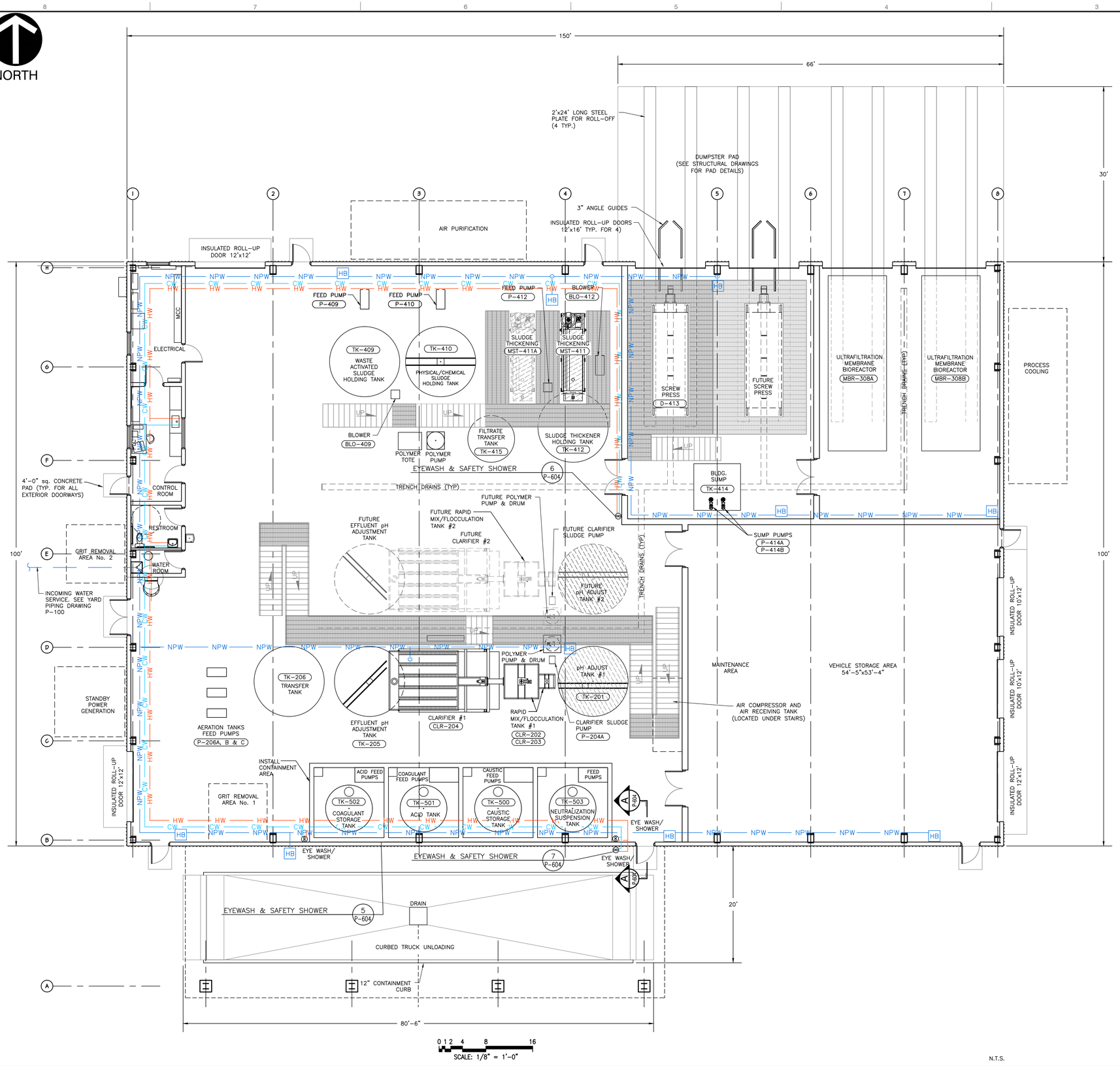

NOTE:

1. ALL LINES NON-POTABLE EXCEPT EYEWASH/SHOWER HOT AND COLD WATER PIPING AND CONTROL ROOM SINK.
2. BUILDING GIRDERS AND ROOF PURLIN ZEE SHAPES CAN BE USED TO SUPPORT UTILITY TRAYS (CABLE TRAY & PIPES TRAY) AND PIPING OR CONDUITS WITH CONDITIONS AS FOLLOWS. ATTACHMENTS TO THE PURLINS SHALL BE MADE THROUGH THE HORIZONTAL BOTTOM FLANGE FACE WITHOUT DISTURBING THE UP-TURN AT THE EDGE OF THE FLANGE OPPOSITE OF THE WEB. A BAR OR UNISTRUT MEMBER CAN BE FASTENED (BOLTED) TO AT LEAST THREE OR MORE PURLINS, WITH THE HANGER RODS THEN ATTACHED TO THE BAR OR UNISTRUT MEMBER, NOT THE PURLIN. SINGLE POINT LOADS ON PURLINS ARE LIMITED TO A 50# MAXIMUM LOAD AT THE BOTTOM FLANGE AT ANY POINT ALONG THE PURLIN SPAN, BUT ARE TO BE AVOIDED. UNISTRUT MEMBERS TO SUPPORT THE LOAD, ATTACHED TO MULTIPLE PURLINS AS NOTED, IS THE REQUIRED ARRANGEMENT FOR LOADS CARRIED BY PURLINS.
3. INSTALL 1" WATER FLUSH LINE IN CLARIFIER FOR FLUSH AS NEEDED. INSTALL ROTAMETER AND ISOLATION VALVE IN LINE. TERMINATE AT 8'-0" IN CLARIFIER. INSTALL WITH CAP AND 1/4" WEEP HOLES 6" O.C. IN BOTTOM 24".

NON-POTABLE WATER USAGE TABLE

SERVICE	USAGE	SIZE (NPT)
FILTER PRESS PRE-COAT MAKE-UP	INTERMITTENT 10 GPM MAX	1"
MEMBRANE MAKE-UP	INTERMITTENT 10 GPM MAX	1"
POLYMER FEED E-210A	0.07 – 0.8 GPM	1/2"
POLYMER FEED E-210B	0.07 – 0.8 GPM	1/2"
POLYMER FEED E-210C	0.07 – 0.8 GPM	1/2"
LINE FLUSH	INTERMITTENT	1"
SEAL FLUSH	NOT REQUIRED	—
HOSE BIB	INTERMITTENT @ 8 GPM	3/4"
CLARIFIER CLF 207 AND CLF 208 HOPPER FLUSH	AS NEEDED	1"

POTABLE WATER USAGE TABLE

SERVICE	USAGE	SIZE (NPT)
EYEWASH/SAFETY SHOWER	INTERMITTENT @ 20 GPM	1 1/4"
HOT WATER HEATER	INTERMITTENT @ 8 GPM MAX	3/4"
SINK	1 GPM	1/2"

FIXTURE SCHEDULE

FIXTURE	No.	DESCRIPTION
HOSE BIB	6	GRAINGER ITEM 1 APV8 QUARTER TURN BRASS
EYEWASH/ SAFETY SHOWER	1	HAWS 8300 FP, 8300.158 (HEAT TRACED) OR EQUAL, 1 1/4" CONNECTION
EYEWASH/ SAFETY SHOWER	3	HAWS 8300-8309 COMBINATION 20 GPM SHOWER. 1.2 GPM EYEWASH
TEMPERED WATER/ BLEND VALVE	2	HAWS 9201 H LEAD FREE. 31 GPM
TANKLESS ELECTRIC HEATER	1	STEIBEL ELTRON TEMPRA 36 PLUS 208V 3 PHASE, 8 GPM @ 30°F
P-TRAP	1	GRAINGER 1 CNW3 P-TRAP, 1 1/2" PVC SCH 40

LEGEND

- ELEVATED TANKS
- HB — HOSE BIB
- COMBINATION EYEWASH/SAFETY SHOWER
- NPW — NON-POTABLE WATER LINE
- PW — POTABLE WATER LINE
- CW — COLD WATER LINE
- HW — HOT WATER LINE

NOT FOR CONSTRUCTION

STATE OF MISSOURI IVAN COOPER NUMBER PE-2003009211 PROFESSIONAL ENGINEER

REVISION RECORD

NO	DATE	DESCRIPTION
0	####	
1	####	
2	####	
3	####	
4	####	
5	####	
6	####	
7	####	
8	####	
9	####	

Civil & Environmental Consultants, Inc.
4848 Park 370 Blvd., Suite F • Hazelwood, MO 63042
314-656-4566 · 866-250-3679
www.cecinc.com

BRIDGETON LANDFILL, LLC
13570 ST. CHARLES ROCK ROAD
BRIDGETON, MO 63044
PHONE: (314) 744-8195
FAX: (314) 656-2107

BRIDGETON LANDFILL
13570 ST. CHARLES ROCK ROAD
TREATMENT BUILDING
SERVICE WATER LAYOUT

DATE:	JULY 2013	DRAWN BY:	JKS
DWG SCALE:	1/8" =1'-0"	CHECKED BY:	DRAFT
PROJECT NO:			130-484
APPROVED BY:			DRAFT

DRAWING NO.: P-503

\\SVR-STLDUS\PROJECTS\2013\130-484\-CADD\DWG\PHASE1\130484-P503.DWG LAST SAVED BY:(KSTILLS) – 8/29/2013 2:24:04 PM, LAST PRINTED BY:(STILLS, KEITH) – 8/29/2013 4:16:32 PM

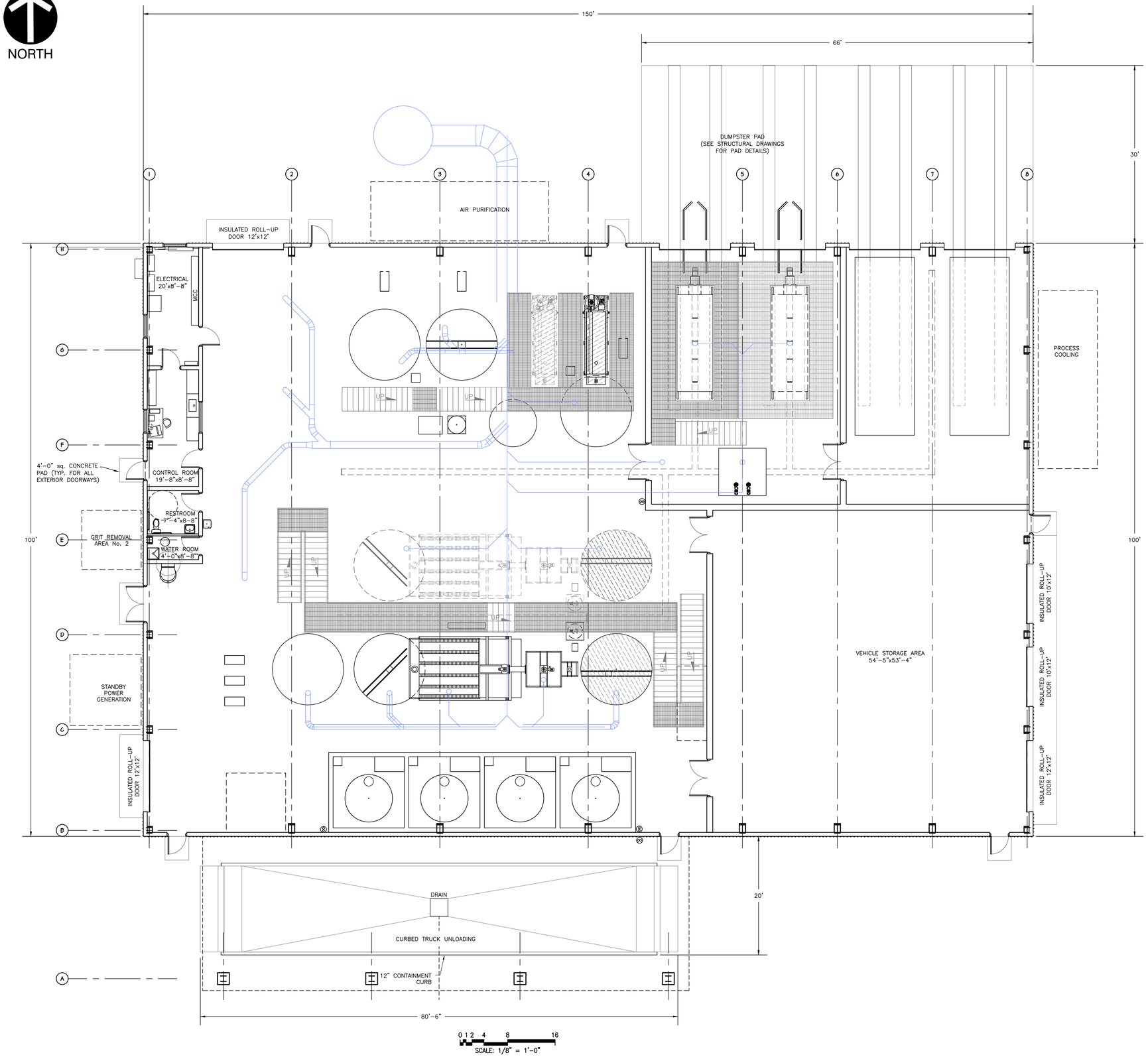

LEGEND

ELEVATED TANKS

NOT FOR CONSTRUCTION

STATE OF MISSOURI
IVAN
COOPER
NUMBER
PE-2003009211
PROFESSIONAL ENGINEER
8-30-13

REVISION RECORD

NO	DATE	DESCRIPTION
#	####	
#	####	
#	####	
#	####	
#	####	
#	####	
#	####	
#	####	
#	####	

Civil & Environmental Consultants, Inc.
4848 Park 370 Blvd., Suite F • Hazelwood, MO 63042
314-656-4566 · 866-250-3679
www.cecinc.com

BRIDGETON LANDFILL, LLC
13570 ST. CHARLES ROCK ROAD
BRIDGETON, MO 63044
PHONE: (314) 744-8195
FAX: (314) 656-2107

BRIDGETON LANDFILL
13570 ST. CHARLES ROCK ROAD
TREATMENT BUILDING
AIR DUCT LAYOUT

DATE:	JULY 2013
DRAWN BY:	JKS
DWG SCALE:	1/8" =1'-0"
CHECKED BY:	DRAFT
PROJECT NO:	130-484
APPROVED BY:	DRAFT

DRAWING NO.: P-504

\\SVR-STLDUS\PROJECTS\2013\130-484\-CADD\DWG\PHASE1\130484-P504.DWG LAST SAVED BY:(KSTILLS) - 8/29/2013 3:01:42 PM, LAST PRINTED BY:(STILLS, KEITH) - 8/29/2013 4:14:52 PM

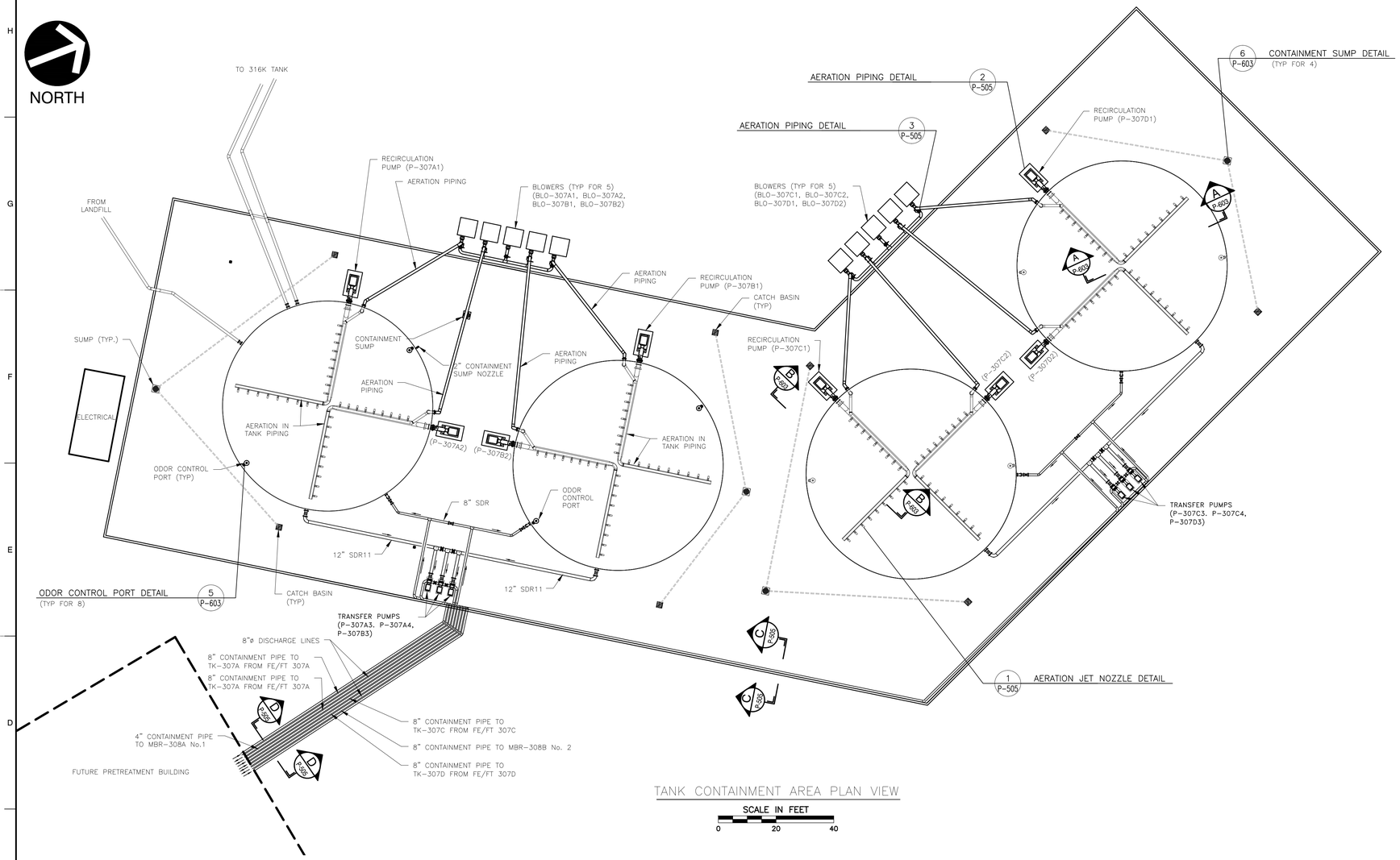

TANK CONTAINMENT AREA PLAN VIEW

SCALE IN FEET 0 20 40

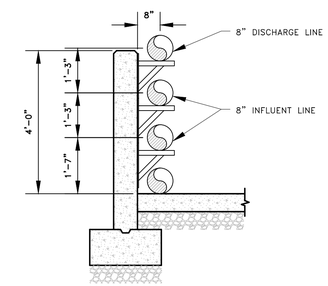

C P-505 SECTION
SCALE: 1/2"=1'

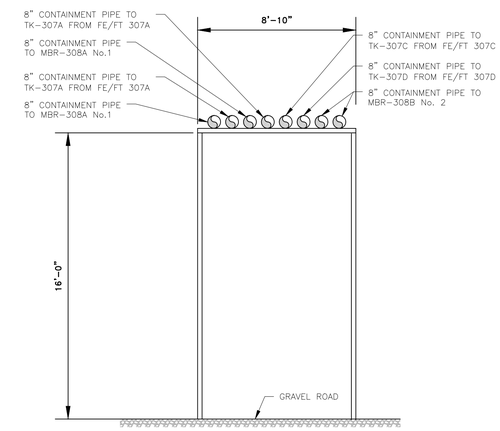

C P-505 PIPE SUPPORT SECTION
SCALE: 1/4"=1'

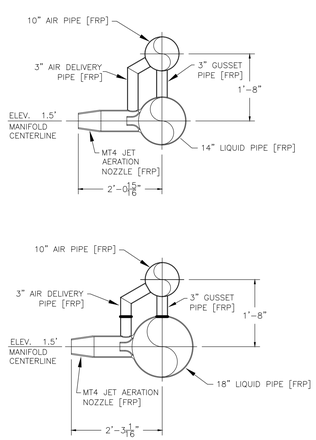

1 P-505 AERATION JET NOZZLE DETAIL
SCALE: 3/16"=1'

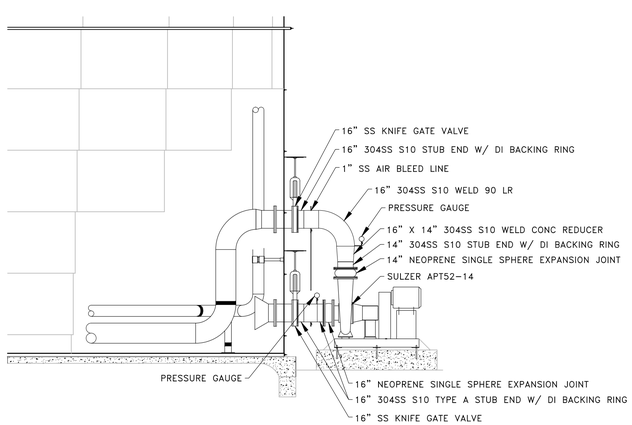

2 P-505 AERATION PIPING DETAIL
SCALE: 3/16"=1'

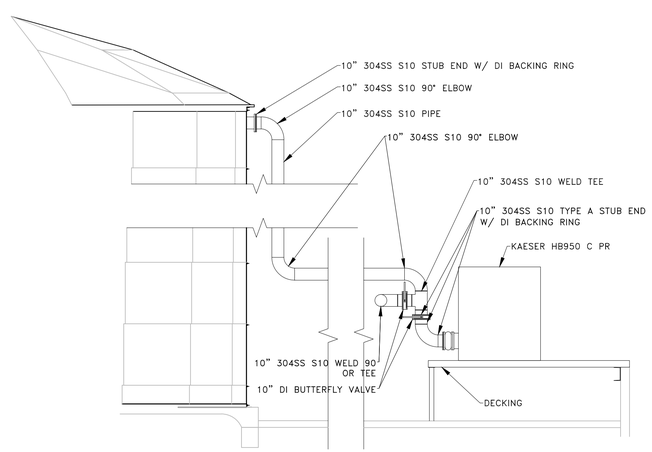

3 P-505 AERATION BLOWER PIPING DETAIL
SCALE: 3/16"=1'

NOT FOR CONSTRUCTION

STATE OF MISSOURI IVAN COOPER NUMBER PE-2003009211 PROFESSIONAL ENGINEER

REVISION RECORD

NO	DATE	DESCRIPTION
1	07/25/13	SUBMITTAL TO MDNR-SWMP
#	####	####
#	####	####
#	####	####
#	####	####
#	####	####
#	####	####
#	####	####
#	####	####

Civil & Environmental Consultants, Inc.
4848 Park 370 Blvd., Suite F • Hazelwood, MO 63042
314-656-4566 · 866-250-3679
www.cecinc.com

BRIDGETON LANDFILL, LLC
13570 ST. CHARLES ROCK ROAD
BRIDGETON, MO 63044
PHONE: (314) 744-8195
FAX: (314) 656-2107

BRIDGETON LANDFILL
13570 ST. CHARLES ROCK ROAD
TANK CONTAINMENT AREA
PLAN AND DETAILS

DATE: JULY 2013	DRAWN BY: JKS
DWG SCALE: AS NOTED	CHECKED BY: IAC
PROJECT NO:	130-484
APPROVED BY:	DRAFT

DRAWING NO.: P-505

\\SWR-STL02\PROJECTS\2013\130-484\-CADD\DWG\PHASE01\130484-P505.DWG LAST SAVED BY:(KSTELLS) - 8/28/2013 4:12:56 PM, LAST PRINTED BY:(STELLS, KEITH) - 8/28/2013 4:13:32 PM

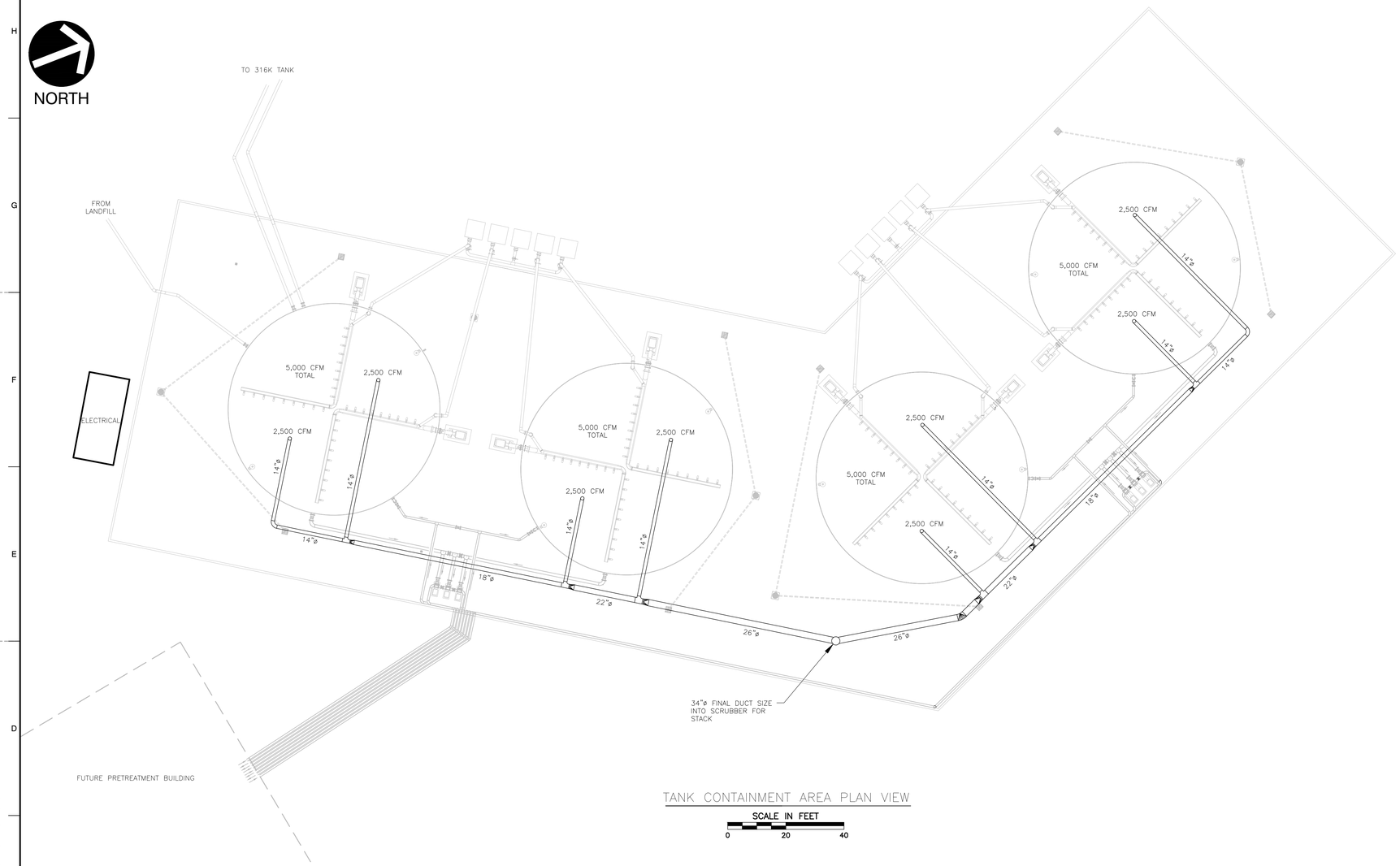

TANK CONTAINMENT AREA PLAN VIEW

SCALE IN FEET

0 20 40

NOT FOR CONSTRUCTION

STATE OF MISSOURI
IVAN COOPER
NUMBER PE-2003009211
PROFESSIONAL ENGINEER
8-30-2013

REVISION RECORD

NO	DATE	DESCRIPTION
1	07/26/13	SUBMITTAL TO MDNR/SWMP
#	####	####
#	####	####
#	####	####
#	####	####
#	####	####
#	####	####
#	####	####
#	####	####

Civil & Environmental Consultants, Inc.
4848 Park 370 Blvd., Suite F • Hazelwood, MO 63042
314-656-4566 · 866-250-3679
www.cecinc.com

BRIDGETON LANDFILL, LLC
13570 ST. CHARLES ROCK ROAD
BRIDGETON, MO 63044
PHONE: (314) 744-8195
FAX: (314) 656-2107

BRIDGETON LANDFILL
13570 ST. CHARLES ROCK ROAD
TANK CONTAINMENT AREA
AIR DUCT PLAN AND DETAILS

DATE: JULY 2013	DRAWN BY: JKS
DWG SCALE: AS NOTED	CHECKED BY: IAC
PROJECT NO:	130-484
APPROVED BY:	DRAFT

DRAWING NO.:
P-506

\\SWR-STLDC01\PROJECTS\2013\130-484\-CADD\DWG\PHASE01\130484-P506.DWG LAST SAVED BY(KSTILLS) - 8/28/2013 7:26:51 PM, LAST PRINTED BY(STILLS, KEITH) - 8/28/2013 4:23:32 PM

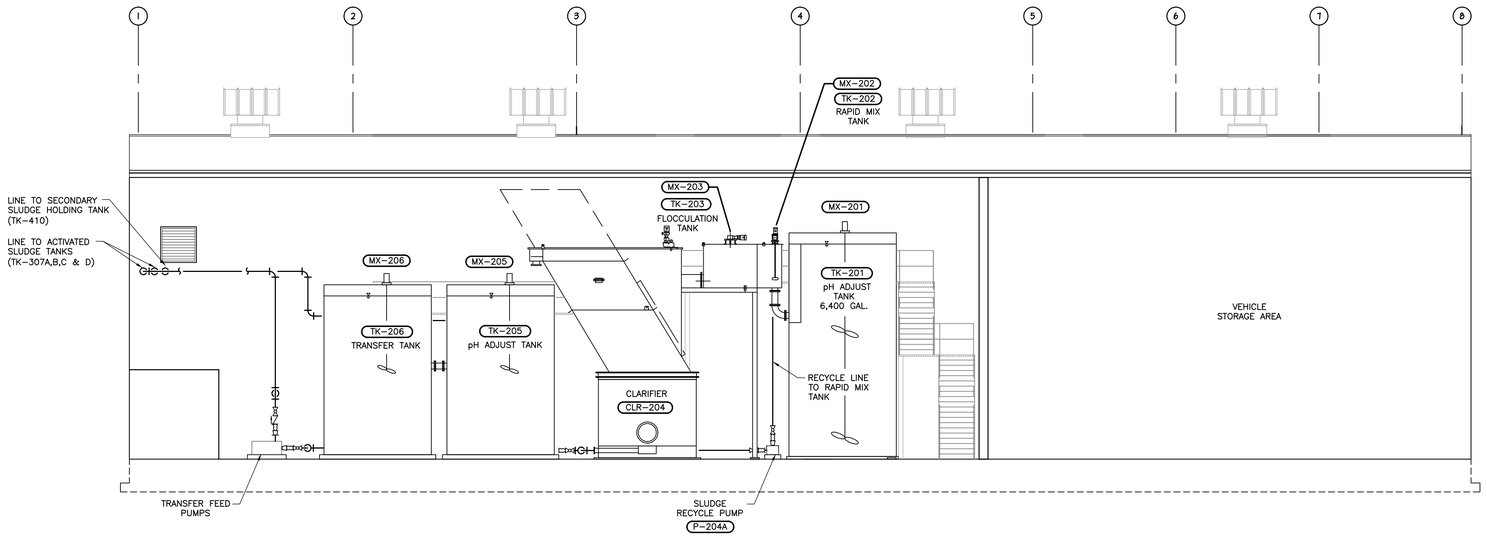

A
EN-2
CROSS SECTION

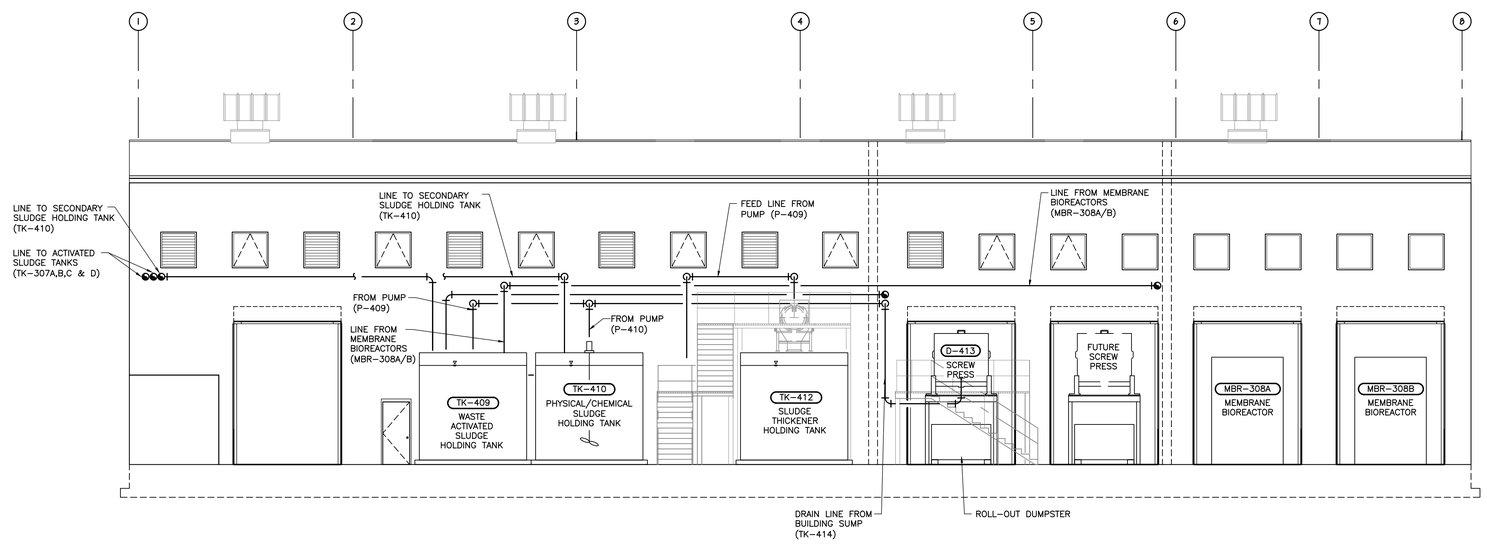

B
EN-2
CROSS SECTION

0 1 2 4 8 16
SCALE: 1/8" = 1'-0"

NOTE:
1. ELEVATIONS BASED ON 2" GROUT PADS UNDER STEEL BASE PLATES (CLARIFIER), 4" AND 6" CONCRETE PADS UNDER FLAT BOTTOM FRP TANKS. FLOOR ELEVATION = 0.0

NOT FOR CONSTRUCTION

STATE OF MISSOURI
IVAN COOPER
NUMBER PE-2003009211
PROFESSIONAL ENGINEER
8-30-2013

REVISION RECORD

NO	DATE	DESCRIPTION
#	####	
#	####	
#	####	
#	####	
#	####	
#	####	
#	####	
#	####	
#	####	
#	####	

Civil & Environmental Consultants, Inc.
4848 Park 370 Blvd., Suite F • Hazelwood, MO 63042
314-656-4566 · 866-250-3679
www.cecinc.com

BRIDGETON LANDFILL, LLC
13570 ST. CHARLES ROCK ROAD
BRIDGETON, MO 63044
PHONE: (314) 744-8195
FAX: (314) 656-2107

BRIDGETON LANDFILL
13570 ST. CHARLES ROCK ROAD
TREATMENT BUILDING
BUILDING PIPING SECTIONS

DATE: JUNE 2013	DRAWN BY: JKS
DWG SCALE: NOT TO SCALE	CHECKED BY: DRAFT
PROJECT NO:	130-484
APPROVED BY:	DRAFT

DRAWING NO.: P-600

\\SVR-STLDATA\PROJECTS\2013\130-484\-CADD\DWG\PHASE1\130484-PBDGLDWG LAST SAVED BY:(KSTILLS) - 8/28/2013 7:45:47 PM, LAST PRINTED BY:(STILLS, KEITH) - 8/28/2013 4:38:46 PM

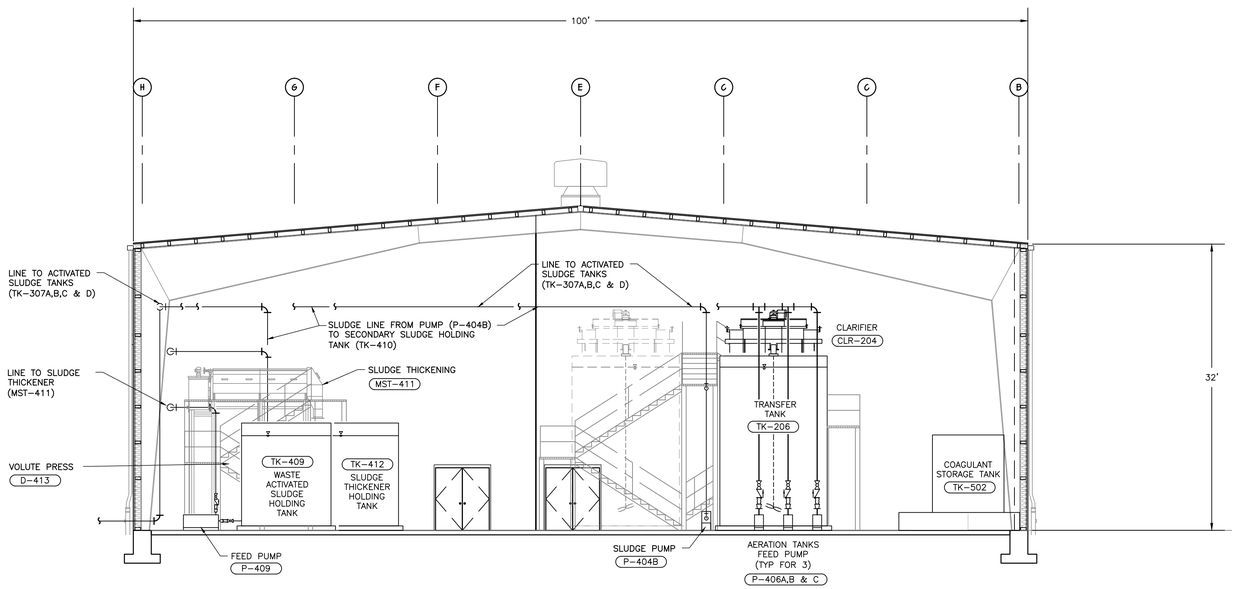

C
EN-2
BUILDING PIPING SECTION
0 1 2 4 8 16
SCALE: 1/8" = 1'-0"

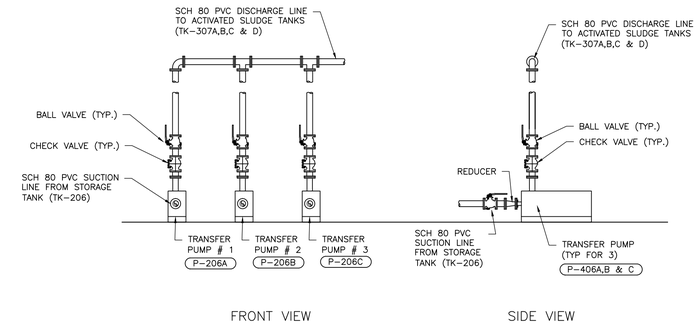

1
EN-4
TRANSFER PUMP DETAIL
NOT TO SCALE

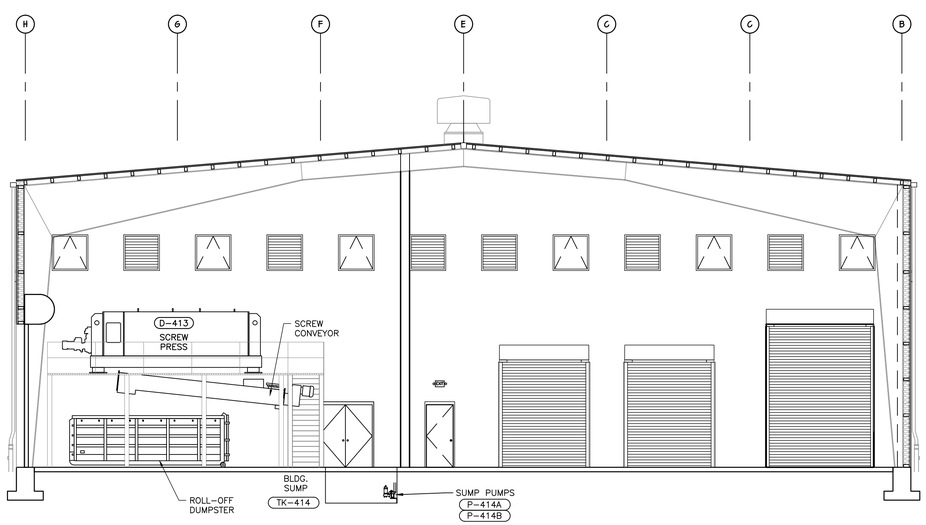

D
EN-2
BUILDING PIPING SECTION
0 1 2 4 8 16
SCALE: 1/8" = 1'-0"

NOT FOR CONSTRUCTION

STATE OF MISSOURI
IVAN COOPER
NUMBER
PE-2003009211
PROFESSIONAL ENGINEER
8-30-2013

REVISION RECORD

NO	DATE	DESCRIPTION
*	####	####
*	####	####
*	####	####
*	####	####
*	####	####
*	####	####
*	####	####
*	####	####

Civil & Environmental Consultants, Inc.
4848 Park 370 Blvd., Suite F - Hazelwood, MO 63042
314-656-4566 · 866-250-3679
www.cecinc.com

BRIDGETON LANDFILL, LLC
13570 ST. CHARLES ROCK ROAD
BRIDGETON, MO 63044
PHONE: (314) 744-8195
FAX: (314) 656-2107

BRIDGETON LANDFILL
13570 ST. CHARLES ROCK ROAD
TREATMENT BUILDING
BUILDING PIPING SECTIONS & DETAILS

DATE:	JULY 2013	DRAWN BY:	JKS
DWG SCALE:	1/8" = 1'-0"	CHECKED BY:	DRAFT
PROJECT NO:			130-484
APPROVED BY:			DRAFT

DRAWING NO.:
P-601

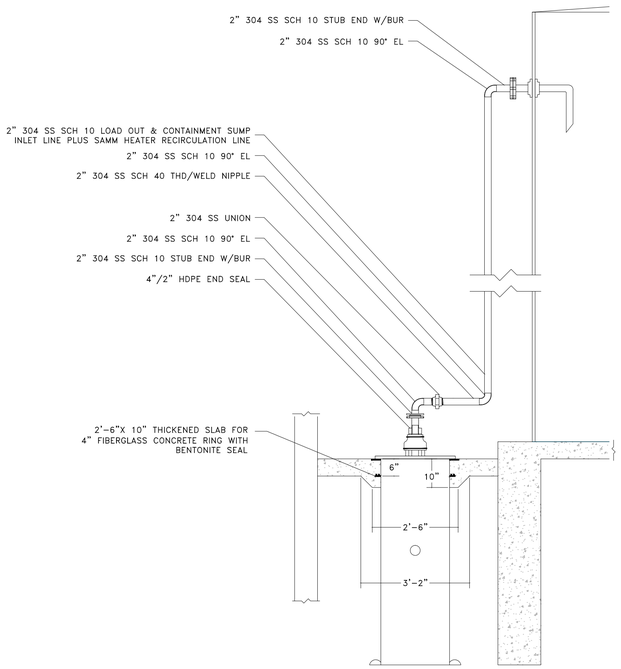

4 P-505 CONTAINMENT SUMP DETAIL
SCALE: N.T.S.

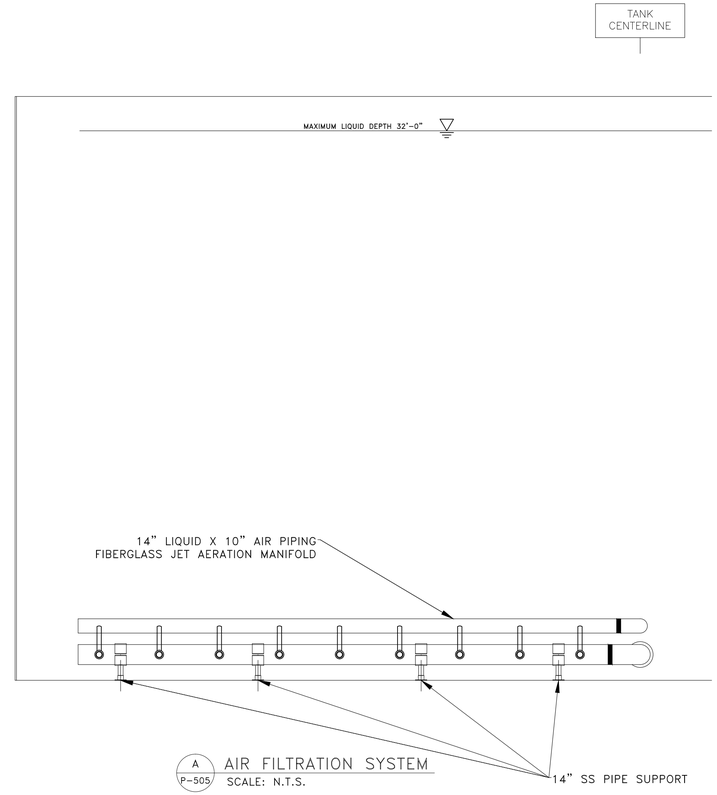

A P-505 AIR FILTRATION SYSTEM
SCALE: N.T.S.

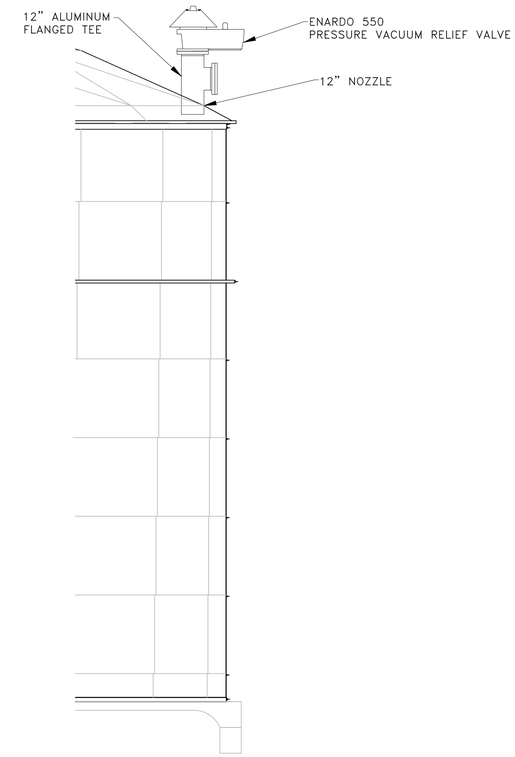

5 P-505 ODOR CONTROL PORT DETAIL
SCALE: N.T.S.

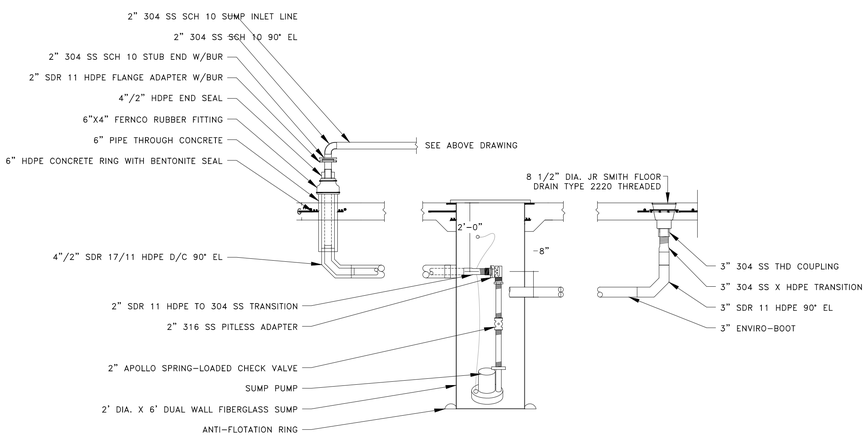

6 P-505 CONTAINMENT SUMP DETAIL
SCALE: N.T.S.

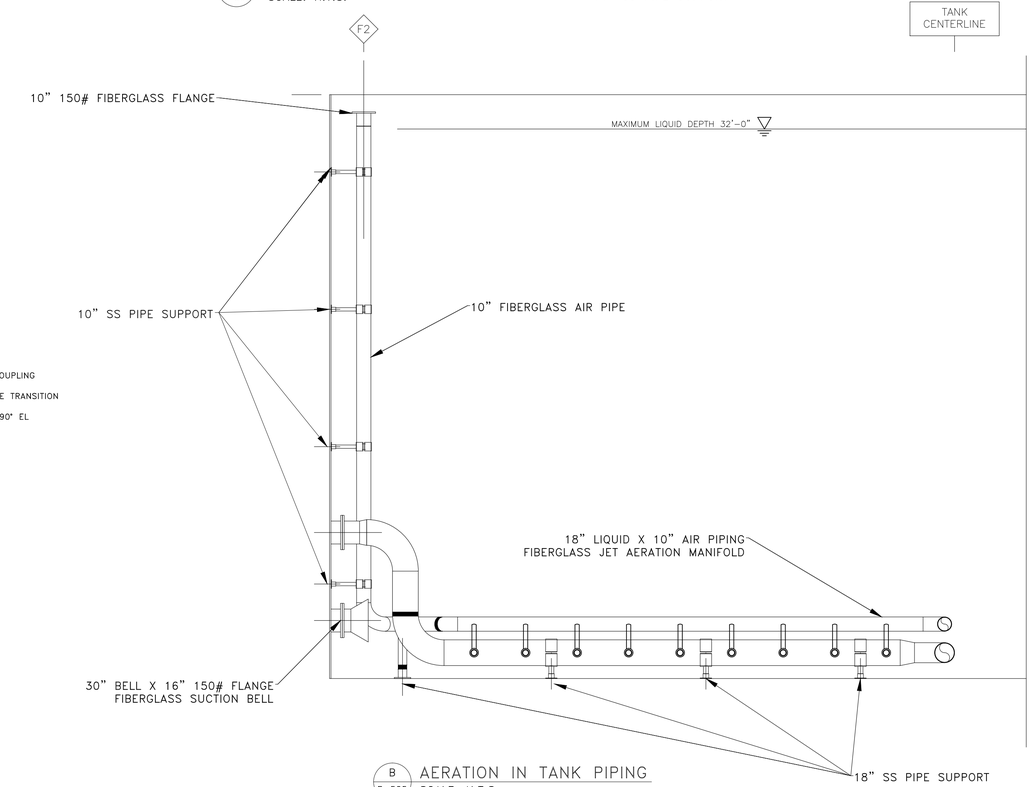

B P-505 AERATION IN TANK PIPING
SCALE: N.T.S.

NOT FOR CONSTRUCTION

STATE OF MISSOURI
IVAN COOPER
NUMBER
PE-2003009211
PROFESSIONAL ENGINEER

REVISION RECORD

NO	DATE	DESCRIPTION
1	07/25/13	SUBMITTAL TO MDNR-SWMP
#	####	####
#	####	####
#	####	####
#	####	####
#	####	####
#	####	####
#	####	####
#	####	####

Civil & Environmental Consultants, Inc.
4848 Park 370 Blvd., Suite F • Hazelwood, MO 63042
314-656-4566 · 866-250-3679
www.cecinc.com

BRIDGETON LANDFILL, LLC
13570 ST. CHARLES ROCK ROAD
BRIDGETON, MO 63044
PHONE: (314) 744-8195
FAX: (314) 656-2107

BRIDGETON LANDFILL
13570 ST. CHARLES ROCK ROAD
TANK AERATION SYSTEM
SECTIONS AND DETAILS

DATE:	JULY 2013
DRAWN BY:	JKS
DWG SCALE:	AS NOTED
CHECKED BY:	IAC
PROJECT NO:	130-484
APPROVED BY:	KTK (SIGNED & SEALED)*

DRAWING NO.: P-603

\\SVR-STLOUIS\PROJECTS\2013\130-484-CADD\DWG\PHASE01\130484-P603.DWG LAST SAVED BY(KSTILLS) - 8/28/2013 7:35:09 PM, LAST PRINTED BY(KSTILLS, KSTIL) - 8/28/2013 4:32:08 PM

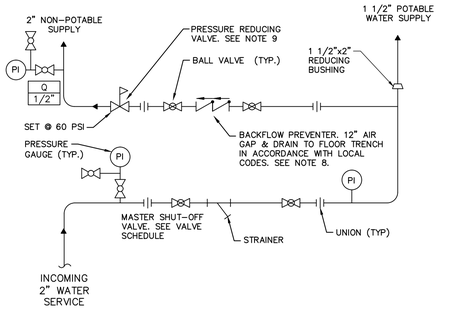

1 P-504 BACKFLOW PREVENTER DETAIL

SCALE: N.T.S.
(SEE NOTES 8, 9, & 10)

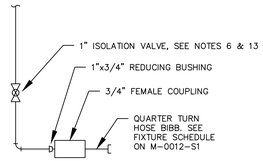

2 P-504 HOSE BIBB INSTALLATION

SCALE: N.T.S.
(SEE NOTES 6 & 13)

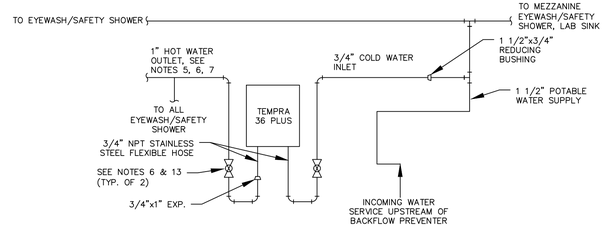

3 P-504 ON-DEMAND HEATER INSTALLATION

SCALE: N.T.S.

GENERAL NOTES

1. CONTRACTOR TO SUBMIT SHOP DRAWINGS ON ALL MAJOR EQUIPMENT PURCHASED. ALL FABRICATED STEEL ITEMS AND ALL ELECTRICAL ITEMS.
2. ALL SUBSTITUTIONS TO BE APPROVED BY ENGINEER PRIOR TO PURCHASE AND INSTALLATION.
3. CONTRACTOR TO CONDUCT LEAKAGE TESTS ON ALL PIPELINES, CONTRACTOR TO NOTIFY OWNER WHEN WORK IS READY FOR TESTING UNDER DIRECTION OF OWNER OR ENGINEER. ALL LABOR EQUIPMENT AND MATERIALS, INCLUDING METERS AND GAUGES SHALL BE FURNISHED BY CONTRACTOR AT HIS OWN EXPENSE. ANY STRUCTURE OR SECTION OF PIPE WHICH DOES NOT COMPLY WITH LEAKAGE TESTS, AS DETERMINED BY OWNER OR ENGINEER, SHALL BE PROMPTLY CORRECTED, REPLACED, OR REPAIRED BY CONTRACTOR AT CONTRACTOR'S EXPENSE. METHODS EMPLOYED FOR CORRECTION SHALL BE APPROVED BY ENGINEER AND/OR OWNER. LEAKAGE TESTS TO BE CONDUCTED ACCORDING TO THE FOLLOWING TEST SCHEDULE:

TYPE	TEST MEDIA	TEST	CRITERIA
STRUCTURES	WATER	HYDROSTATIC	<1/2 INCH DROP IN 24 HOURS
PRESSURE PIPING	WATER	PRESSURE	75 PSIG FOR 12 HRS MAINTAIN MIN 95% OVER TEST PERIOD
SEWER PIPE	WATER	HYDROSTATIC	6 FEET HEAD MAINTAINED 4 HRS
SEWER PIPE	AIR	PRESSURE	5 MIN AT 5 PSI
CONTAINMENT PIPE	WATER	HYDROSTATIC	6 FEET HEAD MAINTAINED 4 HRS
CHEMICAL HOSE	WATER	PRESSURE	75 PSIG FOR 4 HRS MAINTAINED MIN 95% OVER TEST PERIOD

4. NON POTABLE AND POTABLE COLD WATER PIPING AND TEMPERED WATER PIPING TO BE PVC PIPE TO BE TYPE 1 WITH TIO2 ULTRAVOLET LIGHT INHIBITOR AND SHALL BE SCH 40, CONFORMING TO ASTM D1784 AS APPLICABLE. FITTINGS SHALL BE COMPATIBLE WITH PIPE TYPE AND SHALL CONFORM TO ASTM D2464, D2466, OR D2467 AS APPLICABLE. ALL PIPING SHALL BE SOCKET UNLESS OTHERWISE NOTED FOR INSTALLATION BY SOLVENT WELDING.
5. HOT WATER PIPING TO BE CPVC PIPE. CPVC PIPE TO BE TYPE 1 AND SHALL BE SCH 80, CONFORMING TO ASTM D1784 AND F-441 AS APPLICABLE. FITTINGS SHALL BE COMPATIBLE WITH PIPE TYPE AND SHALL CONFORM TO ASTM F-437 AND F-439 AS APPLICABLE. ALL PIPING SHALL BE SOCKET UNLESS OTHER NOTED FOR INSTALLATION BY SOLVENT WELDING.
6. ALL ISOLATION VALVES TO BE PVC SCH 80 OR CPVC SCH 80 BALL VALVES TO MATCH PIPE TYPE.
7. HOT WATER PIPING AND OUTDOOR PIPING TO BE INSULATED AND HEAT TRACED. HEAT TRACING FOR PLASTIC PIPING TO BE LOW-WATTAGE TYPE RECOMMENDED FOR PLASTIC PIPING WITH MIN 2" INSULATION.
8. SUPPLY AND INSTALL BACKFLOW PREVENTER, REDUCED PRESSURE ZONE DOUBLE CHECK VALVE USE WATTS 909QT-S OR EQUAL UNIT AS APPROVED BY LOCAL CODES. MINIMUM 12" AIR GAP AND DRAIN PER LOCAL CODE.
9. SUPPLY AND INSTALL PRESSURE REDUCING VALVE: WILKINS MODEL 70 OR EQUAL.
10. COORDINATE LOCATION OF BACKFLOW PREVENTER WITH OWNER.
11. LOCATE HOSE BIBBS AS SHOWN ON DRAWING P-504 OR AS DIRECTED BY OWNER.
12. PIPE SUPPORT TO BE FOR OVERHEAD PIPING AT 3-FOOT INTERVALS USING GRINNELL ELCEN, UNISTRUT OR EQUAL. PIPING TO HAVE RESTRAINED SUPPORT USING EITHER RISER CLAMPS OR STANCHION SADDLES AT 90 DEGREE INTERVALS. ALL RUNS TO HAVE MINIMUM OF 2 RESTRAINED SUPPORTS PER LINE.
13. INSTALL ISOLATION VALVES AS SHOWN ON DETAILS. LOCATE VALVES IN FIELD FOR ACCESS.
14. MOUNT SAFETY SHOWER UNITS PER MFR. RECOMMENDATIONS
15. ALL RISER PIPES TO BE 1" UNLESS OTHERWISE INDICATED. TIE INTO MAIN WITH REDUCER TEE (1 1/4"x1" OR 2"x1" AS NEEDED)

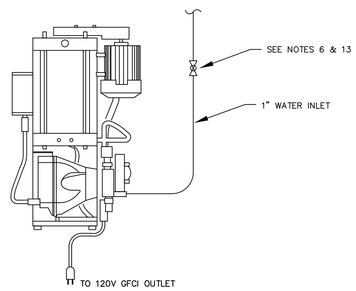

4 P-504 POLYMER FEED SYSTEM

SCALE: N.T.S.

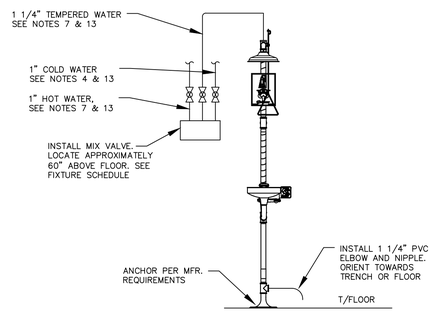

5 P-504 EYEWASH & SAFETY SHOWER INSTALLATION

(INDOOR UNITS ONLY)
SCALE: N.T.S.

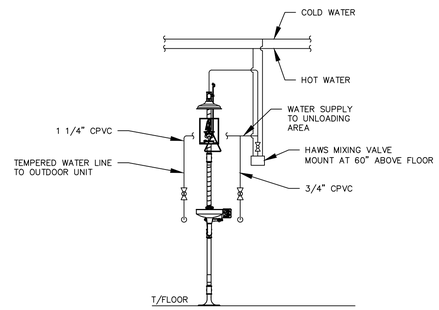

6 P-504 EYEWASH & SAFETY SHOWER INSTALLATION

SCALE: N.T.S.
(ONE LOCATION ONLY)

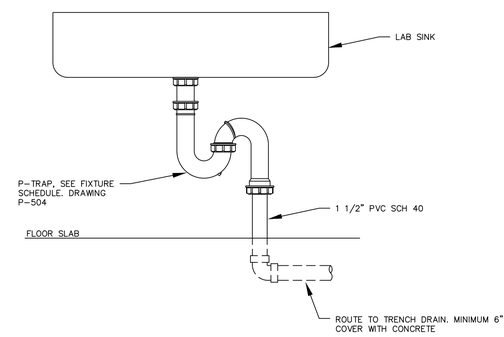

9 P-504 SINK P-TRAP

SCALE: N.T.S.

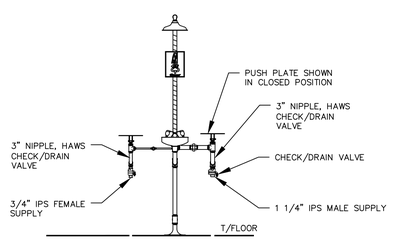

7 P-504 EYEWASH & SAFETY SHOWER INSTALLATION

(OUTDOOR UNITS ONLY)
SCALE: N.T.S.

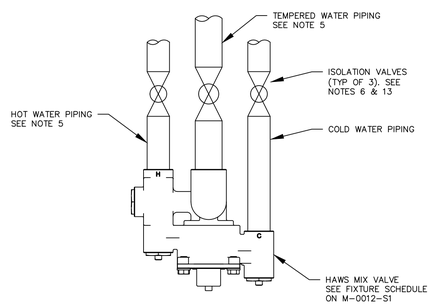

8 P-604 MIX VALVE PIPING

SCALE: N.T.S.

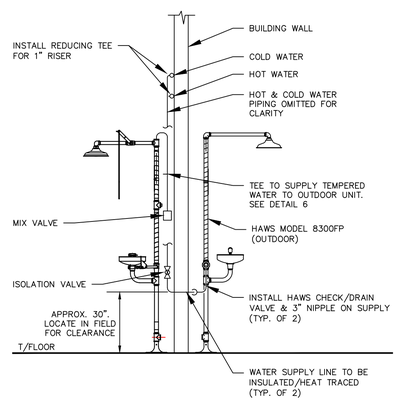

A P-504 EYEWASH & SAFETY SHOWER SECTION

SCALE: N.T.S.

NOT FOR CONSTRUCTION

STATE OF MISSOURI
IVAN COOPER
NUMBER PE-2003009211
PROFESSIONAL ENGINEER

REVISION RECORD

NO	DATE	DESCRIPTION
0	####	
0	####	
0	####	
0	####	
0	####	
0	####	
0	####	
0	####	
0	####	

Civil & Environmental Consultants, Inc.
4848 Park 370 Blvd., Suite F • Hazelwood, MO 63042
314-656-4566 · 866-250-3679
www.cecinc.com

BRIDGETON LANDFILL, LLC
13570 ST. CHARLES ROCK ROAD
BRIDGETON, MO 63044
PHONE: (314) 744-8195
FAX: (314) 656-2107

BRIDGETON LANDFILL
13570 ST. CHARLES ROCK ROAD
TREATMENT BUILDING
SERVICE WATER DETAILS AND NOTES

DATE:	DRAFT	DRAWN BY:	JKS
DWG SCALE:	DRAFT	CHECKED BY:	DRAFT
PROJECT NO:			DRAFT
APPROVED BY:			DRAFT

DRAWING NO.: P-604

\\SVR-STLOUIS\PROJECTS\207171.30-4941-CADD\DWG\PHASE01\30484-P604.DWG LAST SAVED BY:(KSTILLS) - 8/28/2013 7:48:16 PM, LAST PRINTED BY:(STILLS, KEITH) - 8/28/2013 4:38:27 PM

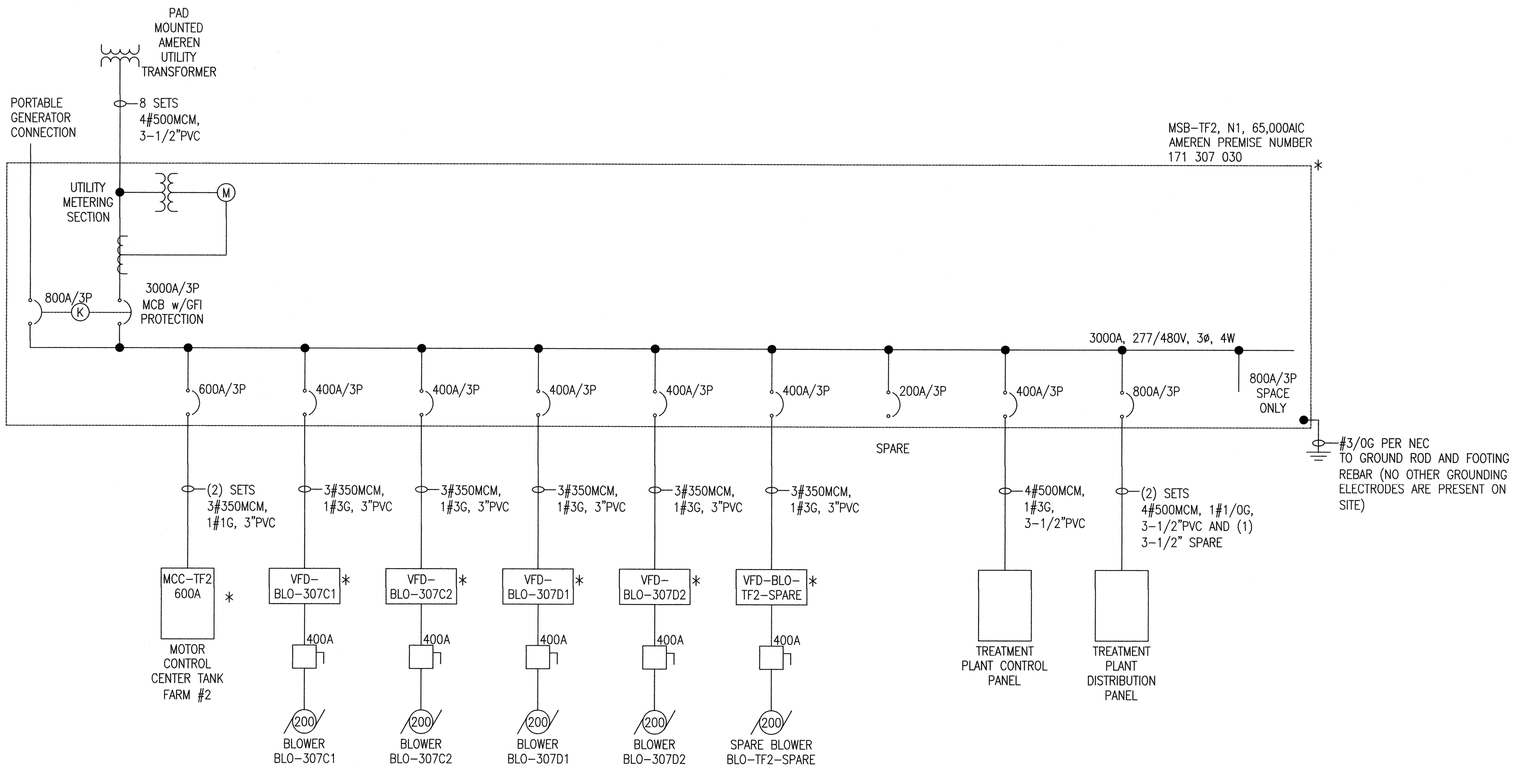

* INDICATES EQUIPMENT THAT IS LOCATED IN THE POWER HOUSE

(K) INDICATES KIRK-KEY INTERLOCK. ONLY ONE BREAKER CAN BE IN THE CLOSED POSITION. 800A BREAKER IS FURNISHED WITH N.O. CONTACTS FOR CONTROL SYSTEM MONITORING.

1/1.02 ONE LINE DIAGRAM
NO SCALE

MCC-TF2
600A, 480V, 3ø, 3W

1 FVNR SIZE 3 P-307C1	5 FVNR SIZE 3 P-307D1	10 FVNR SIZE 1 F-307C2
2 FVNR SIZE 3 P-307C2	6 FVNR SIZE 2 P-307C3	11 FVNR SIZE 1 F-307D1
	7 FVNR SIZE 1 SPARE	12 FVNR SIZE 1 F-307D2
3 FVNR SIZE 1 P-307C5	8 FVNR SIZE 3 P-307D2	13 FVNR SIZE 1 F-TF2-SPARE
4 FVNR SIZE 1 P-307D4		14 FVNR SIZE 2 P-307D3 NOTE 1
600A MLO	9 FVNR SIZE 1 F-307C1	15 FVNR SIZE 2 P-307C4

MCC-TF2

POSITION	ITEM	HP	FEEDER
1	PUMP P-307C1	50	3#4, 1#1G, 1-1/4"C
2	PUMP P-307C2	50	3#4, 1#1G, 1-1/4"C
3	SUMP PUMP P-307C5	10	3#8, 1#10G, NOTE 4
4	SUMP PUMP P-307D4	10	3#8, 1#10G, NOTE 4
5	PUMP P-307D1	50	3#4, 1#1G, 1-1/4"C
6	ANSI PUMP P-307C3	15	3#8, 1#10G, NOTE 2
7	SPARE	–	–
8	PUMP P-307D2	50	3#4, 1#1G, 1-1/4"C
9	BLOWER FAN F-307C1	1	3#10, 1#10G, NOTE 3
10	BLOWER FAN F-307C2	1	3#10, 1#10G, NOTE 3
11	BLOWER FAN F-307D1	1	3#10, 1#10G, NOTE 3
12	BLOWER FAN F-307D2	1	3#10, 1#10G, NOTE 3
13	BLOWER FAN F-TF2-SPARE	1	3#10, 1#10G, NOTE 3
14	ANSI PUMP P-307D3	15	3#8, 1#10G, NOTE 2
15	ANSI PUMP P-307C4	15	3#8, 1#10G, NOTE 2

MCC NOTES

1. REPLACE EXISTING SIZE 1 STARTER WITH NEW FVNR SIZE 2 STARTER FOR ANSI TRANSFER PUMP P-307D3.
2. COMBINE THESE THREE LOADS IN ONE (1) 1-1/4"C.
3. COMBINE THESE FIVE LOADS IN ONE (1) 1-1/4"C.
4. COMBINE THESE TWO LOADS IN ONE (1) 1-1/4"C AND EXTEND TO SECOND SUMP PUMP.

2/1.02 MCC-TF2 ARRANGEMENT
NO SCALE

© Copyright 2012 Kay-Bee Electric Company
This document is for use and installation by Kay-Bee Electric only, and may not be used or reproduced without written permission. Kay-Bee Electric assumes no responsibility for errors and omissions if the document is used without permission.

BRIDGETON LANDFILL, LLC
TANK FARM
12976 ST. CHARLES ROCK ROAD
BRIDGETON, MO 63044

KAY-BEE ELECTRIC
250 RUE ST. FRANCOIS
FLORISSANT, MO 63031
(314) 837-3008
(314) 837-3924 FAX

DRAWN BY: JGB
CHECKED BY: BJK
DATE: 07/22/13
SCALE: NONE
FILE NAME:
REVISIONS: 08/26/13 PERMIT

E-1.02