ENGINEERING FOR A BETTER WORLD

FEEZOR

ENGINEERING, INC.

BRIDGETON LANDFILL LLC.

CONSTRUCTION QUALITY ASSURANCE ACCEPTANCE REPORT

2017 GCCS IMPROVEMENTS

BRIDGETON, ST. LOUIS COUNTY, MISSOURI

Prepared For:
Bridgeton Landfill LLC.
13570 St. Charles Rock Road
Bridgeton, MO 63044

JANUARY 2018

Project No: BT-143

STATE OF MISSOURI
DANIEL RICHARD FEEZOR
NUMBER PE-030292
PROFESSIONAL ENGINEER

1/18/18

Prepared By:

Feezor Engineering, Inc.
3377 Hollenberg Drive
Bridgeton, MO 63044

CONSTRUCTION QUALITY ASSURANCE ACCEPTANCE REPORT

2017 GCCS IMPROVEMENTS

BRIDGETON LANDFILL, LLC

BRIDGETON, SAINT LOUIS COUNTY, MISSOURI

Prepared for

Bridgeton Landfill, LLC

JANUARY 2018

Prepared by

Feezor Engineering, Inc.
3377 Hollenberg Drive
Bridgeton, MO 63044

BT-143

CONTENTS

1	**INTRODUCTION**	**2**
	1.1 Overview of Project	2
2	**CONSTRUCTION DOCUMENTS**	**3**
	2.1 Construction Drawings	3
3	**GCCS INSTALLATION**	**4**
	3.1 New Landfill Gas Extraction Wells Installation	4
	3.2 Construction Quality Assurance	4
4	**SURVEY CONTROL**	**6**
	4.1 Construction Surveying	6
	4.2 Final As-built Surveying	6
5	**CERTIFICATION**	**7**

LIST OF APPENDICES

A. Field Information
- **A.1 Daily Summary Reports**
- **A.2 Equipment Log**

B. Construction Materials Data Sheets and Shop Drawings

D. As-Built Well Logs

E. Construction Certification Drawings (Reduced Set)
- **Drawing 000** Title Page
- **Drawing 001** GCCS Plan View
- **Drawing 002** Details

1 INTRODUCTION

1.1 Overview of Project

Bridgeton Landfill, LLC is a closed municipal solid waste facility located at 13570 St. Charles Rock Road, Bridgeton, St. Louis County, Missouri. The facility is owned and operated by Bridgeton Landfill, LLC (BL) who operate the facility pursuant to Permit No 118912. (and subsequent modifications), issued by the Missouri Department of Natural Resources (MDNR).

During the 2017 construction seasons, BL installed (10) ten additional gas extraction wells. Recovery Drilling Service (RDS) of Dudley, MA was selected as the driller for the project. Sharp STL Inc. of St. Louis, MO and Fusion Solutions Inc. out of Carlinville, IL were chosen to provide support and piping installation during the project. Feezor Engineering Inc. (FEI) of Bridgeton, MO, provided the initial and record surveying to document the location of the installed gas extraction wells and associated GCCS piping.

FEI was also selected as the Construction Quality Assurance (CQA) consultant to observe and document the construction of the leachate system upgrades. Daniel R. Feezor, P.E. of FEI was the Construction Quality Assurance Officer (CQAO). Mr. Feezor selected Andrew Roberts and Bill Abernathy to be the CQA Officers in absentia.

2 CONSTRUCTION DOCUMENTS

2.1 Construction Drawings

FEI created a detailed set of construction drawings for this project. These drawings provided the detail to properly construct all the necessary components project. Construction drawings were also used for the proper selection of materials and provided adequate detail for the installation of the GCCS upgrades.

3 GCCS INSTALLATION

3.1 New Landfill Gas Extraction Wells Installation

Ten (10) new gas wells were installed throughout areas of the landfill to enhance landfill gas collection. RDS drilled the wells using a Soilmec SR-30 drill rig with a core barrel bucket. FEI observed and documented the drilling process including but not limited to logging of waste depth, temperature and composition. Daily Field Reports can be found in **Appendix A.1.**

Well piping consisted of 18" SDR-11 HDPE solid and perforated piping. The pipe sections were butt-fused together by Fusion Solutions. A low-pressure HDPE cap was installed at the bottom of each well casing and a pre-fabricated 18" flanged lid on the top of each well casing prior to installation.

The pipe was raised using a winch on the drill rig and lowered into the borehole to the appropriate depth. Granular backfill consisting of one three-quarter (3/4) inch to one (1) inch diameter washed non-carbonate gravel was placed in the borehole around the perforated pipe. A Volvo loader transported the gravel to the well location and placed it into the borehole. The gravel was placed to a point generally about two feet above the perforated pipe. Before the bentonite was added, one (1) foot of clean soil was used as a plug. A two (2) foot bentonite seal was then placed above the soil plug. Water was added to the layers of bentonite to adequately hydrate the seal. cover soil was then placed over the bentonite layer followed by another two (2) foot hydrated bentonite seal. Approved cover soil was used to fill the remaining borehole to the ground surface.

Construction material data sheets and shop drawings can be found in **Appendix B.**

The as-built well depths and well construction details are shown on the as-built well logs in **Appendix C**.

A two (2) inch diameter well head was installed and connected to the gas header system via lateral piping by Fusion Solutions Inc.

3.2 Construction Quality Assurance

3.2.1 Construction Oversight

The CQAO inspected all materials for the gas collection system. This included piping, valves, fittings, and backfill material to ensure that these materials were acceptable and consistent with the construction plans and site CQA plan. The CQAO inspected the materials to be constructed of HDPE pipe to determine if the materials meet the following requirements:

- All HDPE pipe was new, or first quality, and was furnished at lengths as indicated on the approved design plans. All HDPE piping was straight throughout its length and generally free from all imperfections.

- The HDPE pipe and fittings had a minimum Standard Dimension Ratio (SDR) as noted on the design plans.

During installation of the landfill gas collection system enhancements, the CQAO documented that the construction adhered to the plans, specifications, and CQA plan. This included:

- Pipe and appurtenances were installed true to line, grade, and location with the pipe supported and restrained against movement with all valve stems plumb.

- The pipe joints, except where flanged joints or electro-fusion couplers were specified on the approved design plans, were butt fused as recommended by the pipe manufacturer. All shavings from the preparation of pipe ends for fusion were removed from the pipe prior to installation.

During storage, the technician documented that pipes and fittings were stacked so as to prevent damage by marring, crushing or puncture. Maximum stacking height was limited to 6 feet.

The technician recorded applicable test data, areas of construction, problems and remedies, construction equipment and methodologies, survey data, and equipment calibration on the Daily Summary Reports and the Daily Inspection Reports, included herein as **Appendix A.1**.

4 SURVEY CONTROL

4.1 Construction Surveying

Feezor Engineering Inc. of Bridgeton, Missouri, provided surveying as the Project Surveyor.

4.2 Final As-built Surveying

Feezor Engineering Inc. of Bridgeton, Missouri provided the final certification survey for the as-built coordinates of the installed Gas Extraction Wells.

5 CERTIFICATION

I, Daniel R. Feezor, P.E., do hereby certify to my best knowledge and belief, that the 2017 GCCS Improvements at the Bridgeton Landfill were constructed in accordance with the approved Construction Quality Assurance Program.

Appendix A

FIELD INFORMATION

Sub-Appendices

A.1 Daily Summary Reports

A.2 Equipment Log

Sub-Appendix A.1

Daily Summary Reports

Feezor Engineering, Inc.
406 E. Walnut St.
Chatham, IL 62629
(217) 483-3118

Engineering for a Better World
FEEZOR
ENGINEERING, INC.

Daily Field Summary Report

Client: Bridgeton Landfill LLC
Project: 2017 GCCS Improvements
Location: Bridgeton, MO
Contractor(s): Recovery Drilling Service Inc. (RDS), Sharp, Fusion Solutions Inc.
Weather: AM P. Cloudy PM P. Cloudy
Temperature: AM 28 PM 44

Job No.: BT-143
Task No.: -
Date: 12/15/17
Report No.: 1

Description of field activities (include labor, equipment, site conditions, sampling, etc.)

0630 – I arrived on site.
0700 – Daily safety meeting held with Bridgeton Landfill, contractors and FEI.
0710 – Work is being performed to prepare the location for GEW-178. Sharp is setting up all odor control devices and getting the vacuum box connected to the GCCS system.
1125 – RDS begins boring GEW-178 to a target depth of 40' below ground surface utilizing a Soilmec SR-30 drill Rig.
1300 – RDS has reached depth of 46' on GEW-178.
1305 – 18" SDR-11 prefabricated well casing is being set for GEW-178. See the as-built well logs for the specifics on the well casing and annular backfill.
1545 – Annular backfill at GEW-178 complete. Safety grate has been installed approx. 2' below ground surface.
1600 – Fusion Solutions is working to install EVOH boot around the well casing at GEW-179. Lateral piping is also being ran to connect well location to the GCCS system.
1700 – Boot and GCCS connection complete.
1715 – Work complete for day. Left Site

Copies To: Erin Fanning, Dan Feezor

FEI Representative:

Feezor Engineering, Inc.
406 E. Walnut St.
Chatham, IL 62629
(217) 483-3118

Daily Field Summary Report

Client:	Bridgeton Landfill LLC	**Job No.:**	BT-143
Project:	2017 GCCS Improvements	**Task No.:**	-
Location:	Bridgeton, MO	**Date:**	12/16/17
Contractor(s):	Recovery Drilling Service Inc. (RDS), Sharps, Fusion Solutions Inc.	**Report No.:**	2

Weather: AM P. Cloudy PM P. Cloudy

Temperature: AM 30 PM 60

Description of field activities (include labor, equipment, site conditions, sampling, etc.)

0645 – I arrived on site.
0700 – Daily safety meeting held with Bridgeton Landfill, contractors and FEI.
0710 – Work is being performed to prepare the location for GEW-179. Sharps is setting up all odor control devices and getting the vacuum box connected to the GCCS system.
0745 – RDS begins boring GEW-179 to a target depth of 40’ below ground surface utilizing a Soilmec SR-30 drill Rig.
0840 – RDS has reached depth on GEW-179.
0920 – 18” SDR-11 prefabricated well casing is being set for GEW-179. See the as-built well logs for the specifics on the well casing and annular backfill.
1100 – Annual backfill at GEW-179 complete. Safety grate has been installed approx. 2’ below ground surface.
1115 - Work is being performed to prepare the location for GEW-180. Sharps is setting up all odor control devices and getting the vacuum box connected to the GCCS system.
1130 - RDS begins boring GEW-180 to a target depth of 40’ below ground surface utilizing a Soilmec SR-30 drill Rig.
1230 – RDS has reached depth on GEW-180.
1245 – 18” SDR-11 prefabricated well casing is being set for GEW-180. See the as-built well logs for the specifics on the well casing and annular backfill.
1320 – Annual backfill at GEW-180 complete. Safety grate has been installed approx. 2’ below ground surface.
1330 – Fusion Solutions is working to install EVOH boot the well casing at both GEW-179 and GEW-180. Lateral piping is also being ran as to connect both well locations to the GCCS system.
1630 – Work complete for day. Left Site

Copies To: Erin Fanning, Dan Feezor

FEI Representative:

Feezor Engineering, Inc.
406 E. Walnut St.
Chatham, IL 62629
(217) 483-3118

Daily Field Summary Report

Client:	Bridgeton Landfill LLC	**Job No.:**	BT-143
Project:	2017 GCCS Improvements	**Task No.:**	-
Location:	Bridgeton, MO	**Date:**	12/17/17
Contractor(s):	Recovery Drilling Service Inc. (RDS), Sharps, Fusion Solutions Inc.	**Report No.:**	3

Weather: AM P. Cloudy PM P. Cloudy

Temperature: AM 41 PM 54

Description of field activities (include labor, equipment, site conditions, sampling, etc.)

0645 – I arrived on site.
0700 – Daily safety meeting held with Bridgeton Landfill, contractors and FEI.
0710 – Work is being performed to prepare the location for GEW-186. Sharps is setting up all odor control devices and getting the vacuum box connected to the GCCS system.
1000 – RDS begins boring GEW-186 to a target depth of 40’ below ground surface utilizing a Soilmec SR-30 drill Rig.
1100 – RDS has reached depth on GEW-186.
1130 – 18” SDR-11 prefabricated well casing is being set for GEW-186. See the as-built well logs for the specifics on the well casing and annular backfill.
1245 – Annual backfill at GEW-179 complete. Safety grate has been installed approx. 2’ below ground surface.
1250 – Fusion Solutions is working to install EVOH boot the well casing at GEW-186. Lateral piping is also being ran as to connect both well locations to the GCCS system.
1400 – Work complete for day. Left Site

Copies To: Erin Fanning, Dan Feezor

FEI Representative:

Feezor Engineering, Inc.
406 E. Walnut St.
Chatham, IL 62629
(217) 483-3118

Daily Field Summary Report

Client: Bridgeton Landfill LLC
Job No.: BT-143
Project: 2017 GCCS Improvements
Task No.: -
Location: Bridgeton, MO
Date: 12/18/17
Contractor(s): Recovery Drilling Service Inc. (RDS), Sharps, Fusion Solutions Inc.
Report No.: 4
Weather: AM P. Cloudy PM P. Cloudy
Temperature: AM 35 PM 51

Description of field activities (include labor, equipment, site conditions, sampling, etc.)

0645 – I arrived on site.
0700 – Daily safety meeting held with Bridgeton Landfill, contractors and FEI.
0710 – Work is being performed to prepare the location for GEW-185. Sharps is setting up all odor control devices and getting the vacuum box connected to the GCCS system.
0815 – RDS begins boring GEW-185 to a target depth of 40’ below ground surface utilizing a Soilmec SR-30 drill Rig.
0900 – RDS has encountered refusal on GEW-185 at a depth of 31’. Well casing is being shortened and well will be set at this depth.
1015 – 18” SDR-11 prefabricated well casing is being set for GEW-185. See the as-built well logs for the specifics on the well casing and annular backfill.
1130 – Annual backfill at GEW-185 complete. Safety grate has been installed approx. 2’ below ground surface.
1140 – Work is being performed to prepare the location for GEW-184. Sharps is setting up all odor control devices and getting the vacuum box connected to the GCCS system.
1230 - RDS begins boring GEW-184 to a target depth of 40’ below ground surface utilizing a Soilmec SR-30 drill Rig.
1310 – RDS has encountered refusal on GEW-184 at a depth of 25’. Well casing is being shortened and well will be set at this depth.
1340 – 18” SDR-11 prefabricated well casing is being set for GEW-184. See the as-built well logs for the specifics on the well casing and annular backfill.
1500 – Annual backfill at GEW-184 complete. Safety grate has been installed approx. 2’ below ground surface.
1505 – Fusion Solutions is working to install EVOH boot the well casing at GEW-184 and GEW-185. Lateral piping is also being ran as to connect both well locations to the GCCS system.
1730 – Work complete for day. Left Site

Copies To: Erin Fanning, Dan Feezor

FEI Representative:

Feezor Engineering, Inc.
406 E. Walnut St.
Chatham, IL 62629
(217) 483-3118

Daily Field Summary Report

Client:	Bridgeton Landfill LLC	**Job No.:**	BT-143
Project:	2017 GCCS Improvements	**Task No.:**	-
Location:	Bridgeton, MO	**Date:**	12/19/17
Contractor(s):	Recovery Drilling Service Inc. (RDS), Sharps, Fusion Solutions Inc.	**Report No.:**	5

Weather: AM P. Cloudy PM P. Cloudy

Temperature: AM 32 PM 54

Description of field activities (include labor, equipment, site conditions, sampling, etc.)

0645 – I arrived on site.
0700 – Daily safety meeting held with Bridgeton Landfill, contractors and FEI.
0705 – Work is being performed to prepare the location for GEW-182. Sharps is setting up all odor control devices and getting the vacuum box connected to the GCCS system.
0800 – RDS begins boring GEW-182 to a target depth of 40’ below ground surface utilizing a Soilmec SR-30 drill Rig.
0900 – RDS has encountered high temperatures on GEW-182 at a depth of 25’. Well casing is being shortened and well will be set at this depth.
0945 – 18” SDR-11 prefabricated well casing is being set for GEW-182. See the as-built well logs for the specifics on the well casing and annular backfill.
1100 – Annual backfill at GEW-182 complete. Safety grate has been installed approx. 2’ below ground surface.
1115 – Work is being performed to prepare the location for GEW-188. Sharps is setting up all odor control devices and getting the vacuum box connected to the GCCS system.
1300 - RDS begins boring GEW-188 to a target depth of 60’ below ground surface utilizing a Soilmec SR-30 drill Rig.
1330 – RDS as encountered metal at 9’. BLF has elected to relocate well upslope approx. 10’ and redrill.
1400 - RDS begins boring GEW-188 to a target depth of 60’ below ground surface utilizing a Soilmec SR-30 drill Rig.
1500 – RDS has encountered high temperatures on GEW-188 at a depth of 30’. Well casing is being shortened and well will be set at this depth.
1515 – 18” SDR-11 prefabricated well casing is being set for GEW-188. See the as-built well logs for the specifics on the well casing and annular backfill.
1630 – Annual backfill at GEW-188 complete. Safety grate has been installed approx. 2’ below ground surface.
1505 – Fusion Solutions is working to install EVOH boot the well casing at GEW-182 and GEW-188. Lateral piping is also being ran as to connect both well locations to the GCCS system.
1730 – Work complete for day. Left Site

Copies To: Erin Fanning, Dan Feezor

FEI Representative:

Feezor Engineering, Inc.
406 E. Walnut St.
Chatham, IL 62629
(217) 483-3118

Daily Field Summary Report

Client:	Bridgeton Landfill LLC	**Job No.:**	BT-143
Project:	2017 GCCS Improvements	**Task No.:**	-
Location:	Bridgeton, MO	**Date:**	12/20/17
Contractor(s):	Recovery Drilling Service Inc. (RDS), Sharps, Fusion Solutions Inc.	**Report No.:**	6

Weather: AM P. Cloudy PM P. Cloudy

Temperature: AM 30 PM 53

Description of field activities (include labor, equipment, site conditions, sampling, etc.)

0645 – I arrived on site.
0700 – Daily safety meeting held with Bridgeton Landfill, contractors and FEI.
0705 – Work is being performed to prepare the location for GEW-187. Sharps is setting up all odor control devices and getting the vacuum box connected to the GCCS system.
0830 – RDS begins boring GEW-187 to a target depth of 40’ below ground surface utilizing a Soilmec SR-30 drill Rig.
0945 – RDS has reached final depth of 40’ on GEW-187.
1015 – 18” SDR-11 prefabricated well casing is being set for GEW-187. See the as-built well logs for the specifics on the well casing and annular backfill.
1115 – Annual backfill at GEW-187 complete. Safety grate has been installed approx. 2’ below ground surface.
1130 – Work is being performed to prepare the location for GEW-181. Sharps is setting up all odor control devices and getting the vacuum box connected to the GCCS system.
1150 - RDS begins boring GEW-181 to a target depth of 60’ below ground surface utilizing a Soilmec SR-30 drill Rig.
1250 – RDS has encountered refusal on GEW-181 at a depth of 41’. Well casing is being shortened and well will be set at this depth.
1400 – 18” SDR-11 prefabricated well casing is being set for GEW-188. See the as-built well logs for the specifics on the well casing and annular backfill.
1445 – Annual backfill at GEW-188 complete. Safety grate has been installed approx. 2’ below ground surface.
1450 – Fusion Solutions is working to install EVOH boot the well casing at GEW-187. Lateral piping is also being ran as to connect both well locations to the GCCS system.
1630 – Project Complete. Left Site

Copies To: Erin Fanning, Dan Feezor

FEI Representative:

Sub-Appendix A.2

Equipment Log

Bridgeton Landfill LLC.

2017 GCCS Updates

Construction Equipment List

Recovery Drilling Services

1 -Soilmec SR-30 Hydraulic Drilling Rig

Sharp STL Services

1 – Volvo Front End Loader
1 – Bobcat Skidsteer
1 – CAT Mini-Excavator
1 – Water Truck
1 – Vac Truck

Fusion Solutions Inc.

1 – McElroy 1218 Butt-Fusion Machine
1 – McElroy 6” Bulldog Fusion Machine
1 – Polaris Ranger UTV

APPENDIX B

CONSTRUCTION MATERIALS DATA SHEETS AND SHOP DRAWINGS

PARTS LIST			
ITEM	SIZE/DR	PART NUMBER	DESCRIPTION
1	18" DR 11 IPS	35181199	6 ROWS OF 1/2" DIA HOLES, 60 DEG APART, 4" C-C, STAGGERED 2" & 30 DEG (12 TOTAL ROWS)

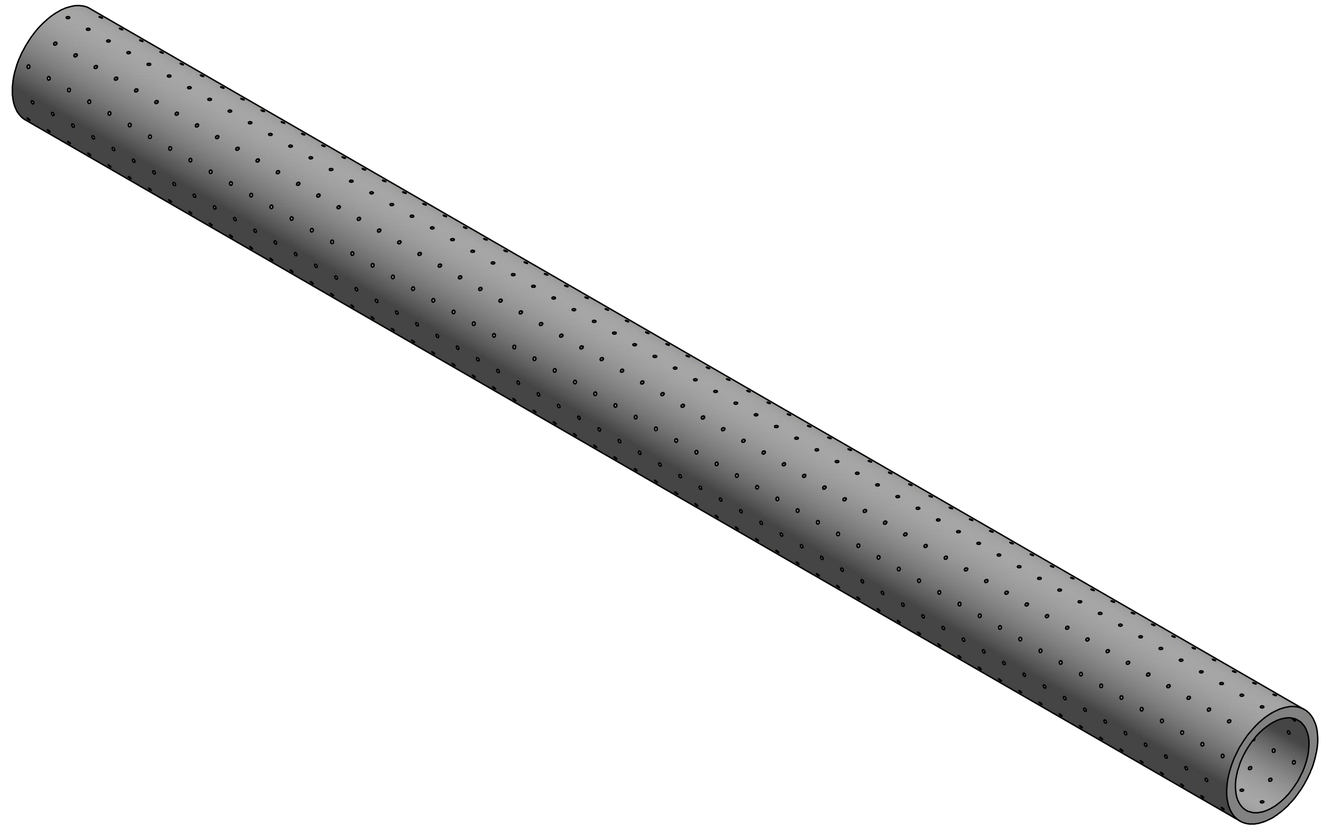

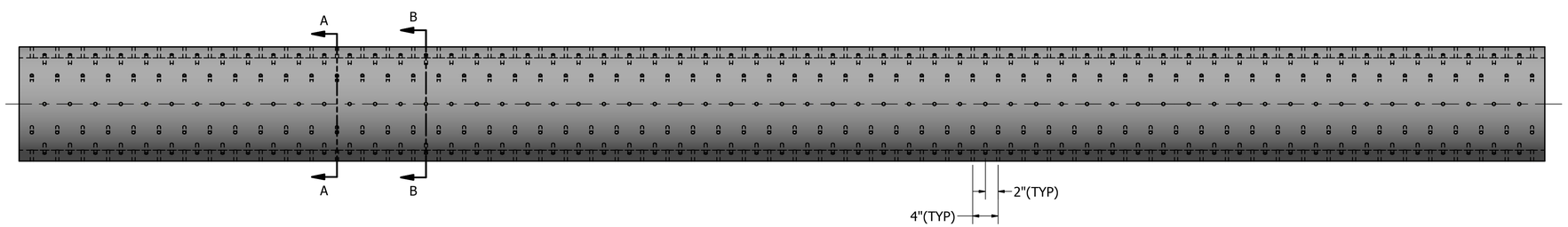

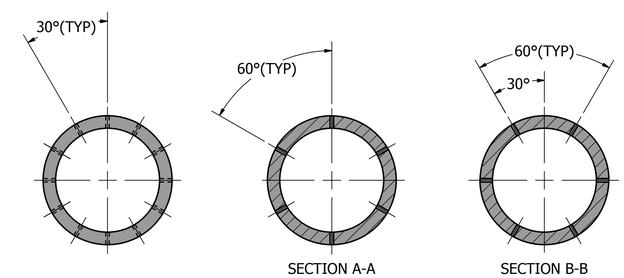

NOT TO SCALE

THIS DRAWING IS INTELLECTUAL PROPERTY OF ISCO INDUSTRIES, INC. ("ISCO"). IT IS INTENDED FOR THE IDENTIFICATION OF THE GOOD(S) DEPICTED AND SHALL NOT BE CIRCULATED OR REPRODUCED WITHOUT PERMISSION FROM AN AUTHORIZED AGENT OF ISCO. THE USE OF THIS DRAWING IS NOT INTENDED TO REPLACE THE EVALUATION, JUDGMENT AND/OR OPINION OF A LICENSED PROFESSIONAL AND THE USER OF THIS DRAWING EXPRESSLY ASSUMES AND RELEASES ISCO FROM ALL RISK AND LIABILITY ASSOCIATED THEREWITH. THE GOODS DEPICTED IN THIS DRAWING ARE SUBJECT TO ISCO'S STANDARD TERMS AND CONDITIONS OF SALE SET FORTH AT WWW.ISCO-PIPE.COM/TERMS-AND-CONDITIONS.ASPX .

TOLERANCE STANDARDS AS MEASURED AT AMBIENT TEMPERATURE:
-ISCO SHALL MAINTAIN A FABRICATION TOLERANCE OF ± 1/2" FOR ALL DIMENSIONS SHOWN.
-ISCO SHALL MAINTAIN A FABRICATION TOLERANCE OF ± 2° FOR ALL ANGLES SHOWN.
-(X'X") MARKS A DIMENSION THAT IS FOR REFERENCE ONLY.
-(NC) MARKS A DIMENSION THAT IS NOT CRITICAL AND REQUIRES NO NOTIFICATION OF DEVIATION BY FABRICATOR.
-SPECIFIC TOLERANCES MAY BE PROVIDED BY CUSTOMER BUT MUST BE APPROVED BY ISCO INDUSTRIES AND NOTED ON DRAWING PRIOR TO FABRICATION.
*UNLESS OTHERWISE SPECIFIED.

GENERAL NOTES:
-STRUCTURE OUTLETS NOT DESIGNED AS ANCHOR POINTS FOR CONNECTED PIPING.

REVISION HISTORY

REV	DESCRIPTION	DATE	BY
1	PERF PATTERN REVISED.	11/20/17	BS

TESTING
REQUIRED: NONE
TYPE: N/A
PRESSURE: N/A
DURATION: N/A

APPROVED BY: DATE:
WO #:

ISCO
www.isco-pipe.com 1-800-345-4726

DRAWN BY: SOD DATE: 11/8/2017
REVIEWED BY: BS DATE: 11/8/2017

CUSTOMER NAME: RS (BRIDGETON)
DRAWING TITLE: 18" DR 11 PERF PATTERN
SIZE D
DWG FILE LOCATION: DN/AS/HD/RS (BRIDGETON)-110817
SHEET 1 OF 1
TERRITORY REPRESENTATIVE: HANK DOBSON

PARTS LIST			
ITEM	QTY	PART NUMBER	DESCRIPTION
1	1	49180010	18" IPS BLIND FLANGE 1" THICK HDPE
2	2	50041119	4" DR 11 IPS FLANGE ADAPTER HDPE
3	2	53040024	4" DR 11 IPS BACKUP RING DUCTILE IRON
4	1 ft	10041121	4" DR 11 IPS HDPE PIPE

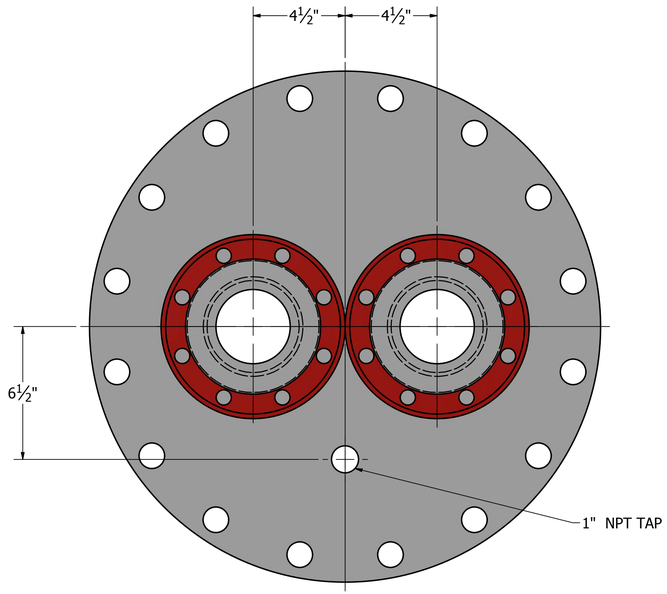

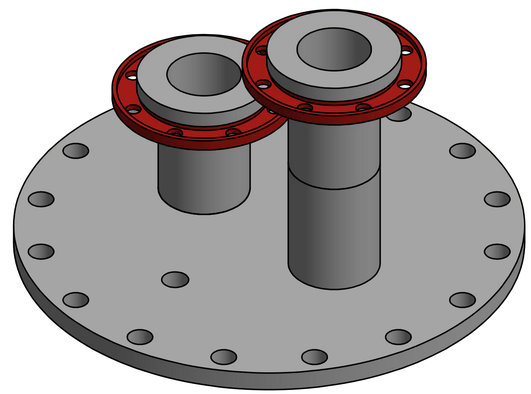

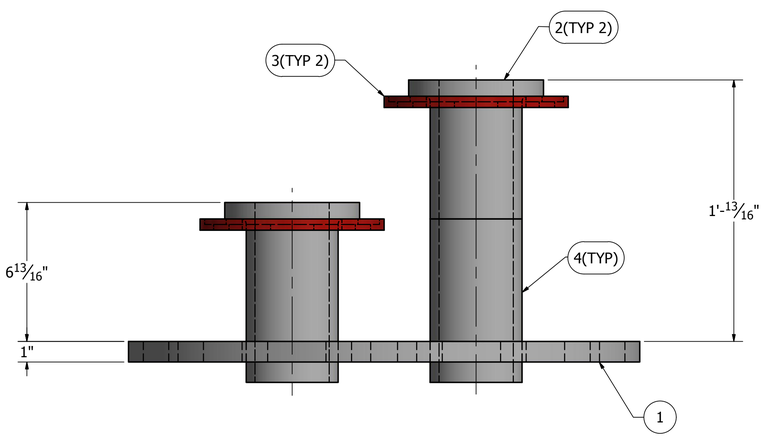

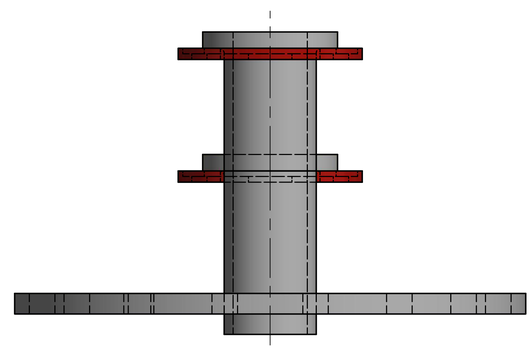

THIS DRAWING IS INTELLECTUAL PROPERTY OF ISCO INDUSTRIES, INC. ("ISCO"). IT IS INTENDED FOR THE IDENTIFICATION OF THE GOOD(S) DEPICTED AND SHALL NOT BE CIRCULATED OR REPRODUCED WITHOUT PERMISSION FROM AN AUTHORIZED AGENT OF ISCO. THE USE OF THIS DRAWING IS NOT INTENDED TO REPLACE THE EVALUATION, JUDGMENT AND/OR OPINION OF A LICENSED PROFESSIONAL AND THE USER OF THIS DRAWING EXPRESSLY ASSUMES AND RELEASES ISCO FROM ALL RISK AND LIABILITY ASSOCIATED THEREWITH. THE GOODS DEPICTED IN THIS DRAWING ARE SUBJECT TO ISCO'S STANDARD TERMS AND CONDITIONS OF SALE SET FORTH AT WWW.ISCO-PIPE.COM/TERMS-AND-CONDITIONS.ASPX .

TOLERANCE STANDARDS AS MEASURED AT AMBIENT TEMPERATURE:
-ISCO SHALL MAINTAIN A FABRICATION TOLERANCE OF ± 1/2" FOR ALL DIMENSIONS SHOWN.
-ISCO SHALL MAINTAIN A FABRICATION TOLERANCE OF ± 2° FOR ALL ANGLES SHOWN.
-(X"X") MARKS A DIMENSION THAT IS FOR REFERENCE ONLY.
-(NC) MARKS A DIMENSION THAT IS NOT CRITICAL AND REQUIRES NO NOTIFICATION OF DEVIATION BY FABRICATOR.
-SPECIFIC TOLERANCES MAY BE PROVIDED BY CUSTOMER BUT MUST BE APPROVED BY ISCO INDUSTRIES AND NOTED ON DRAWING PRIOR TO FABRICATION.
*UNLESS OTHERWISE SPECIFIED.

GENERAL NOTES:
-STRUCTURE OUTLETS NOT DESIGNED AS ANCHOR POINTS FOR CONNECTED PIPING.

REVISION HISTORY

REV	DESCRIPTION	DATE	BY
1	1" TAPPED HOLE ADDED.	11/20/17	BS

TESTING
REQUIRED: NONE
TYPE: N/A
PRESSURE: N/A
DURATION: N/A

APPROVED BY: DATE:
WO #:

ISCO®
www.isco-pipe.com 1-800-345-4726

DRAWN BY: BM DATE: 11/8/2017
REVIEWED BY: BS DATE: 11/8/2017

CUSTOMER NAME: RS (BRIDGETON)
DRAWING TITLE: 18" GAS WELL BLIND
SIZE: D
DWG FILE LOCATION: DN/AS/HD/RS (BRIDGETON)-110817
SHEET 1 OF 1
TERRITORY REPRESENTATIVE: HANK DOBSON

Winter Bros. Material Company

13098 Gravois Road **St. Louis, Mo. 63127**
314/843-1400 **FAX 314/843-1403**

~ Producers of Meramec Sand & Gravel for over 55 years. ~

Source - Meramec River **10/16/2016**
Aggregate Type - Bulk Meramec Special B Gravel **(Hagemann Facility)**
Sieve Analysis - Gradation by Weight

SIEVE ANALYSIS - ASTM C 33 / D 448 / AASHTO M 43 Size No. 4

**** Note - We are not responsible for segregation during the transport of any fine or coarse aggregate.**

U.S. Standard	Cumulative percent		Specification*
Sieve Size	Retained	Passing	Percent Passing
2"	0.0	100	100
1 1/2"	0.0	100	90 - 100
1"	61.4	38.6	20 - 55
3/4"	97.2	2.8	0 - 15
1/2"	99.7	0.3	0 - 10
3/8"	99.7	0.3	0 - 5

SPECIFIC GRAVITY AND ABSORPTION OF COARSE AGGREGATE -ASTM C 128

Fineness Modulus = 7.965 **Absorption, % 2.21** Apparent Specific Gravity =

Effective Grain Size = 22.0mm Bulk Specific Gravity = **Bulk Specific Gravity, SSD = 2.49**

Uniformity Coefficient = 1.359 **Weight per C.F. (Loose) = 79.0 lbs.**

APPENDIX C

AS-BUILT WELL LOGS

Gas Well ID: **GEW-178**

Client: **Bridgeton Landfill LLC.**
Project Location: **Bridgeton, Mo**
Project Name: **2017 GCCS Updates**
FEI Project Number: **BT-143**
FEI Inspector: **Bill Abernathy**
Drilling Contractor: **Recovery Drilling Service**
Driller: **Stan Garrison**
Health Physicists: **N/A**

Drilling Method: **36" Core Barrel**
Well Casing Material: **18" SDR-11 HDPE**
Easting: **516,614.0**
Northing: **1,066,937.0**
GS Elevation: **491.0**
Drill Date(s): **12/15/2017**

Depth in Feet	Temperature (F)	Waste/Soil Description
-3		
0		
5	86.8	Brown Clay Soil - Normal Moisutre
10	106.8	Soil,Cloth,Fibers,Plastics - Dry
15	114.5	Plastics,Rug,Wire - Dry - Little Decomposition
20	142.6	Wood,Carboard,Wire - Dry - Little Decomposition
25	147.3	Household - Damp to Wet - Slight Decompostion
30	152.5	Wood, Plastics,Rug Wire - Saturated - Moderate Decomposition
35	158.2	Severe Decomposed MSW - Saturated
40	164.8	Aggregate,Severe Decomposed MSW - Saturated
45	166.5	Soil/Rock - Refusal - Saturated
50		
55		
60		

Well Completion Details

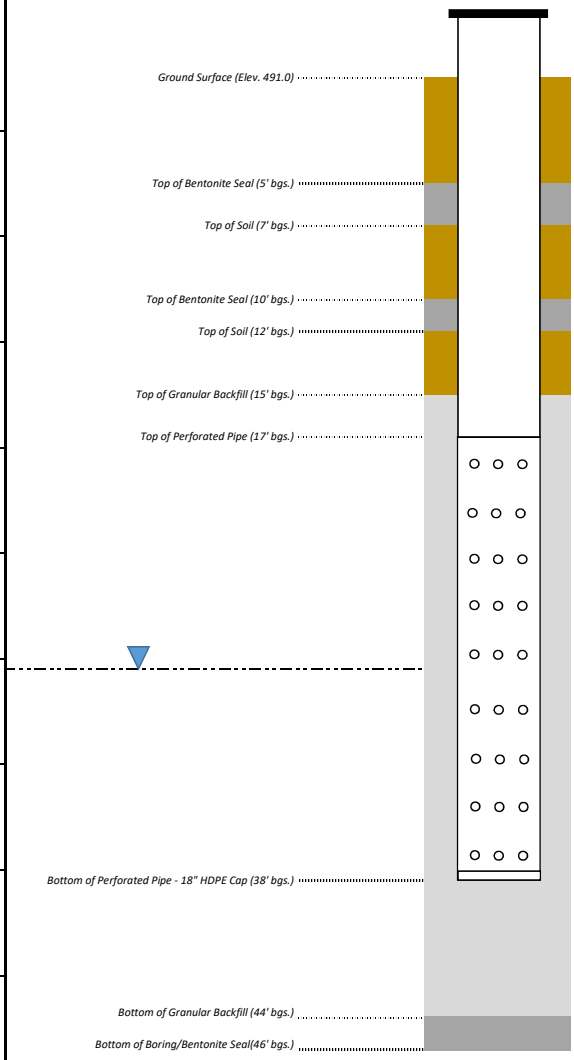

Gas Well ID: **GEW-179**

Client: **Bridgeton Landfill LLC.**
Project Location: **Bridgeton, Mo**
Project Name: **2017 GCCS Updates**
FEI Project Number: **BT-143**
FEI Inspector: **Andrew Roberts**
Drilling Contractor: **Recovery Drilling Service**
Driller: **Stan Garrison**
Health Physicists: **N/A**

Drilling Method: **36" Core Barrel**
Well Casing Material: **18" SDR-11 HDPE**
Easting: **516,715.6**
Northing: **1,067,040.0**
GS Elevation: **491.7**
Drill Date(s): **12/16/2017**

Depth in Feet	Temperature (F)	Waste/Soil Description
-3		
0		
5	76.1	Dark Grey Soil - Normal Moisutre
10	84.3	Dark Grey Soil - Normal Moisutre
15	117.1	Soil w/ Trace Househould Waste - Dry
20	130.1	Household, Plastics,Soil - Dry - Some Decomposition
25	147.8	Soil (50%), Severe Decomposed MSW - Wet
30	176.8	Severe Decomposed MSW - Saturated
35	168.8	Severe Decomposed MSW - Saturated
40	173.8	Severe Decomposed MSW - Saturated
45		
50		
55		
60		

Well Completion Details

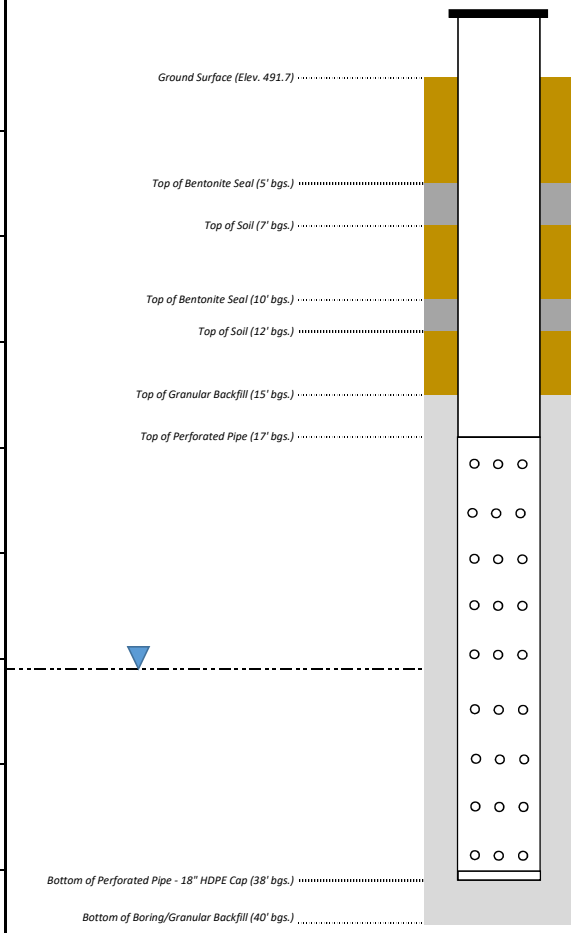

Gas Well ID: **GEW-180**

Client: **Bridgeton Landfill LLC.**
Project Location: **Bridgeton, Mo**
Project Name: **2017 GCCS Updates**
FEI Project Number: **BT-143**
FEI Inspector: **Andrew Roberts**
Drilling Contractor: **Recovery Drilling Service**
Driller: **Stan Garrison**
Health Physicists: **N/A**

Drilling Method: **36" Core Barrel**
Well Casing Material: **18" SDR-11 HDPE**
Easting: **516,542.5**
Northing: **1,066,875.0**
GS Elevation: **492.1**
Drill Date(s): **12/16/2017**

Depth in Feet	Temperature (F)	Waste/Soil Description
-3		
0		
5	74.5	Dark Grey Soil - Normal Moisutre
10	103.7	Soil w/ Trace Househould Waste - Dry
15	120.6	Plastics, Textiles, Household - Dry - Some Decomposition
20	130.8	Paper, Household - Dry - Some Decomposition
25	157	Soil (50%),Household - Light Moisture - Moderate Decomposition
30	175.8	Severe Decomposed MSW - Moist
35	184.7	Severe Decomposed MSW - Saturated
40	183.1	Severe Decomposed MSW - Saturated
45		
50		
55		
60		

Well Completion Details

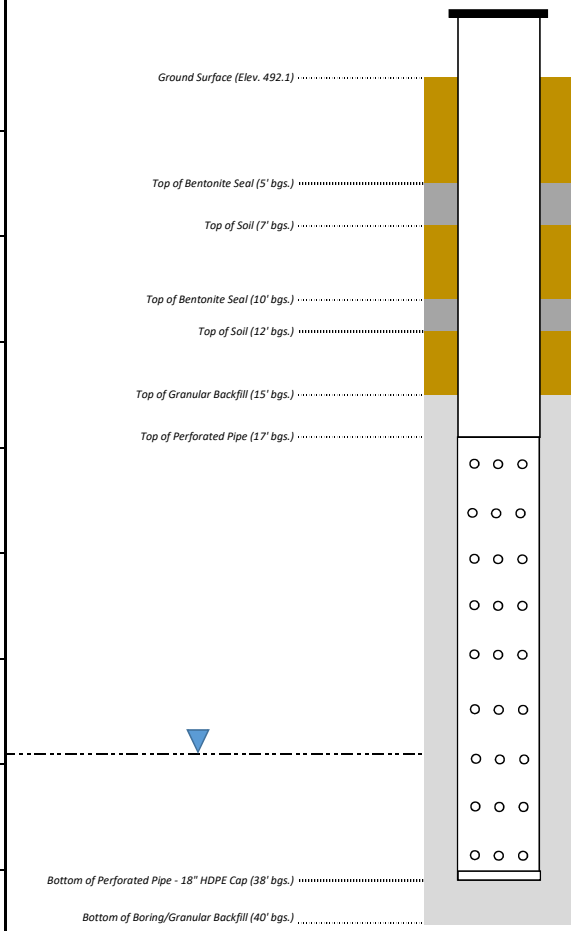

Gas Well ID: **GEW-187**

Client: **Bridgeton Landfill LLC.**
Project Location: **Bridgeton, Mo**
Project Name: **2017 GCCS Updates**
FEI Project Number: **BT-143**
FEI Inspector: **Andrew Roberts**
Drilling Contractor: **Recovery Drilling Service**
Driller: **Stan Garrison**
Health Physicists: **N/A**

Drilling Method: **36" Core Barrel**
Well Casing Material: **18" SDR-11 HDPE**
Easting: **516,568.9**
Northing: **1,067,648.0**
GS Elevation: **488.6**
Drill Date(s): **12/20/2017**

Depth in Feet	Temperature (F)	Waste/Soil Description
-3		
0		
5	85.7	Brown Soil - Little Moisture
10	110.1	Soil,Glass - Little Moisture
15	143.8	Paper, Plastics,Household - Moderate Decomposition - Normal Moisture
20	158.5	Soil (50%),Metal,Household - Moderate Decomposition - Normal Moisture
25	184.6	Soil (25%),Households,Plastics - Severe Decomposition - Damp Moisture
30	193.1	Soil (25%),Households,Plastics - Severe Decomposition - Damp Moisture
35	194.7	Severe Decomposed MSW - Saturated
40	201.3	Severe Decomposed MSW - Saturated
45		
50		
55		
60		

Well Completion Details

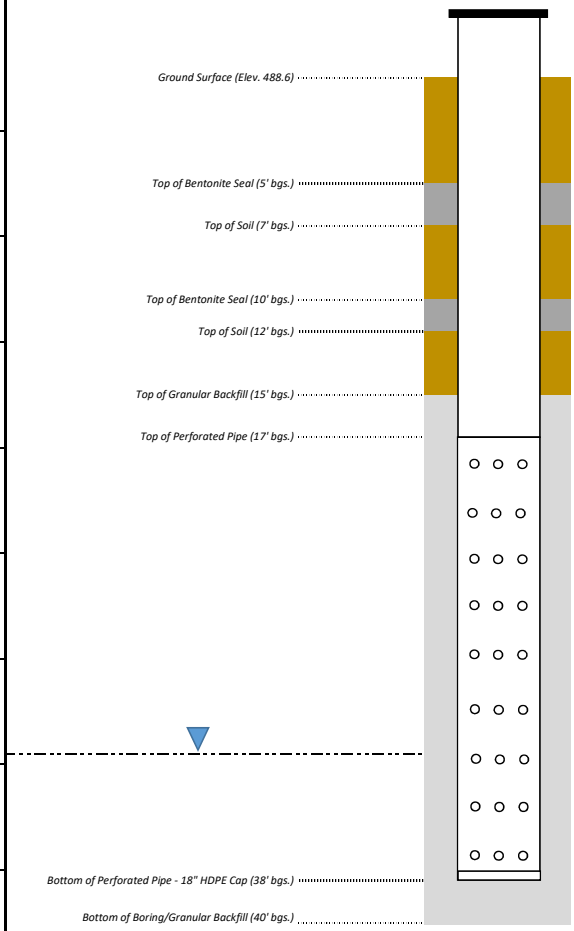

Gas Well ID: **GEW-185**

Client: **Bridgeton Landfill LLC.**
Project Location: **Bridgeton, Mo**
Project Name: **2017 GCCS Updates**
FEI Project Number: **BT-143**
FEI Inspector: **Andrew Roberts**
Drilling Contractor: **Recovery Drilling Service**
Driller: **Stan Garrison**
Health Physicists: **N/A**

Drilling Method: **36" Core Barrel**
Well Casing Material: **18" SDR-11 HDPE**
Easting: **515,424.9**
Northing: **1,066,853.0**
GS Elevation: **472.1**
Drill Date(s): **12/18/2017**

Depth in Feet	Temperature (F)	Waste/Soil Description
-3		
0		
5	93.7	Brown Soil - Dry
10	163.7	Soil (25%),Plastics,Household - Some Decomposition - Slight Moisture
15	181.4	Soil (50%),Plastics,Household - Slight Decomposition - Normal Moisture
20	180.3	Soil (25%),Households,Plastics - Moderate Decomposition - Normal Moisture
25	184.3	Households,Plastics - Moderate Decomposition - Normal Moisture
30	180.1	Soil (25%),Households,Plastics - Moderate Decomposition - Normal Moisture
35		
40		
45		
50		
55		
60		

Well Completion Details

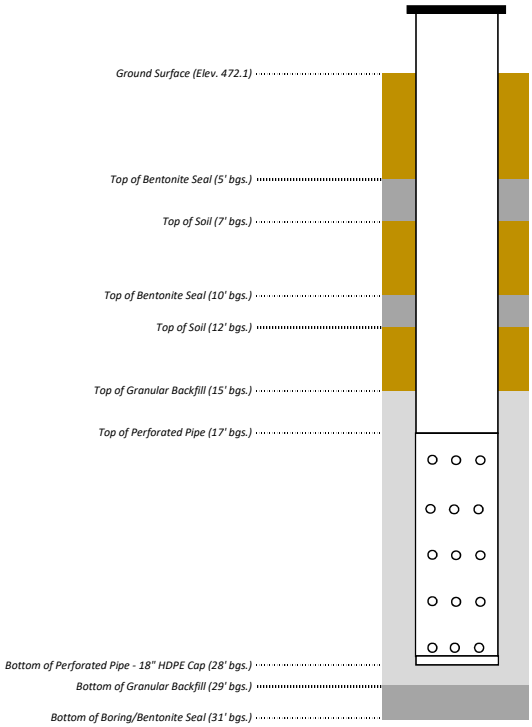

Engineering for a Better World
FEEZOR ENGINEERING, INC.

Gas Well ID: **GEW-184**

Client: **Bridgeton Landfill LLC.**
Project Location: **Bridgeton, Mo**
Project Name: **2017 GCCS Updates**
FEI Project Number: **BT-143**
FEI Inspector: **Andrew Roberts**
Drilling Contractor: **Recovery Drilling Service**
Driller: **Stan Garrison**
Health Physicists: **N/A**

Drilling Method: **36" Core Barrel**
Well Casing Material: **18" SDR-11 HDPE**
Easting: **515,382.1**
Northing: **1,066,912.0**
GS Elevation: **466.0**
Drill Date(s): **12/18/2017**

Depth in Feet	Temperature (F)	Waste/Soil Description
-3		
0		
5	114.8	Soil,Trace MSW - Slight Moisutre
10	145.7	Soil,Paper,Wood,Household - Severe Decomposition
15	162.5	Soil,Household,Plastics - Severe Decomposition
20	169.5	Soil,Household,Plastics - Severe Decomposition
25	157.3	Refusal
30		
35		
40		
45		
50		
55		
60		

Well Completion Details

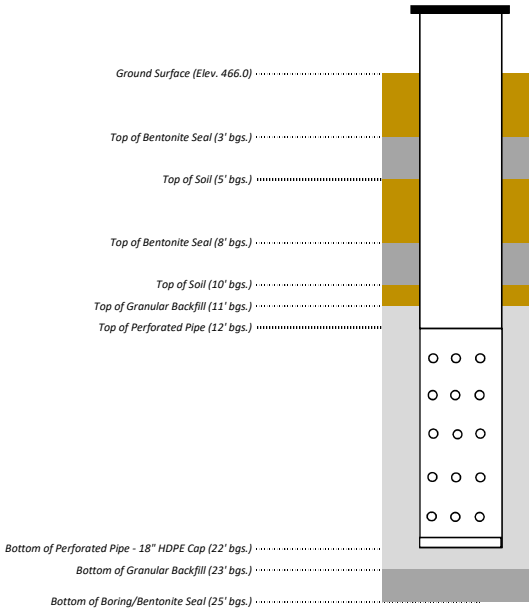

Gas Well ID: **GEW-182**

Client: **Bridgeton Landfill LLC.**
Project Location: **Bridgeton, Mo**
Project Name: **2017 GCCS Updates**
FEI Project Number: **BT-143**
FEI Inspector: **Andrew Roberts**
Drilling Contractor: **Recovery Drilling Service**
Driller: **Stan Garrison**
Health Physicists: **N/A**

Drilling Method: **36" Core Barrel**
Well Casing Material: **18" SDR-11 HDPE**
Easting: **515,416.3**
Northing: **1,067,105.0**
GS Elevation: **469.8**
Drill Date(s): **12/19/2017**

Depth in Feet	Temperature (F)	Waste/Soil Description
-3		
0		
5	73.7	Soil,Trace MSW - Little Moisutre
10	143.9	Soil(50%),Household,Plastics - Little Decomposition - Dry
15	176.7	Soil,Household,Plastics - Some Decomposition - Dry
20	195.3	Soil,Household,Plastics -Some Decomposition - Dry
25	201.7	Severe Decompoed MSW - Dry
30		
35		
40		
45		
50		
55		
60		

Well Completion Details

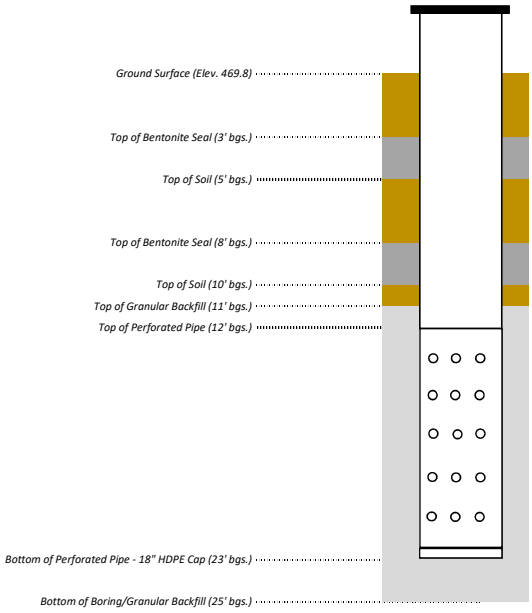

Gas Well ID: **GEW-188**

Client: **Bridgeton Landfill LLC.**
Project Location: **Bridgeton, Mo**
Project Name: **2017 GCCS Updates**
FEI Project Number: **BT-143**
FEI Inspector: **Andrew Roberts**
Drilling Contractor: **Recovery Drilling Service**
Driller: **Stan Garrison**
Health Physicists: **N/A**

Drilling Method: **36" Core Barrel**
Well Casing Material: **18" SDR-11 HDPE**
Easting: **515,516.3**
Northing: **1,066,927.0**
GS Elevation: **476.2**
Drill Date(s): **12/19/2017**

Depth in Feet	Temperature (F)	Waste/Soil Description
-3		
0		
5	67.1	Soil,Trace MSW - Dry
10	137.9	C&D,Household - Little Decomposition - Dry
15	161.7	Soil (25%),Household,Wood - Some Decomposition - Dry
20	191.3	Soil (50%),Household,Textile - Moderate Decomposition - Dry
25	197.8	Soil (10%),Household,Plastics - Moderate Decomposition - Dry
30	201.8	Soil (10%),Household,Plastics - Moderate Decomposition - Dry
35		
40		
45		
50		
55		
60		

Well Completion Details

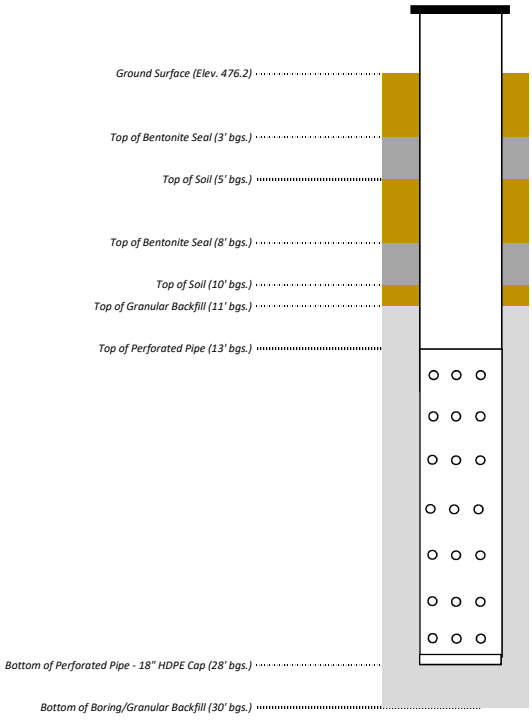

Gas Well ID: **GEW-186**

Client: **Bridgeton Landfill LLC.**
Project Location: **Bridgeton, Mo**
Project Name: **2017 GCCS Updates**
FEI Project Number: **BT-143**
FEI Inspector: **Andrew Roberts**
Drilling Contractor: **Recovery Drilling Service**
Driller: **Stan Garrison**
Health Physicists: **N/A**

Drilling Method: **36" Core Barrel**
Well Casing Material: **18" SDR-11 HDPE**
Easting: **516,015.0**
Northing: **1,066,407.0**
GS Elevation: **487.1**
Drill Date(s): **12/17/2017**

Depth in Feet	Temperature (F)	Waste/Soil Description
-3		
0		
5	69.3	Dark Grey to Brown Soil - Dry
10	134.1	Soil w/ Trace Househould Waste - Dry
15	149.5	Soil,Paper, Plastics,Textile - Moderate Decomposition - Damp
20	156.4	Paper, Plastics,Textile - Moderate Decomposition - Normal Moisture
25	163.4	Soil (25%),Households,Plastics - Moderate Decomposition - Dry
30	162.8	Households,Plastics - Moderate Decomposition - Dry
35	162.8	Severe Decomposed MSW/Soil - Normal Moisture
40	143.1	Severe Decomposed MSW - Normal Moisture
45		
50		
55		
60		

Well Completion Details

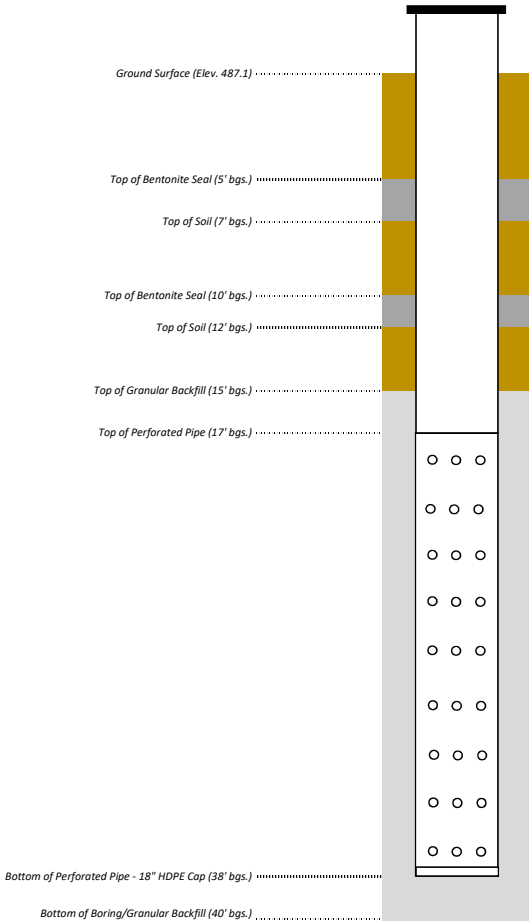

Gas Well ID: **GEW-181**

Client: **Bridgeton Landfill LLC.**
Project Location: **Bridgeton, Mo**
Project Name: **2017 GCCS Updates**
FEI Project Number: **BT-143**
FEI Inspector: **Andrew Roberts**
Drilling Contractor: **Recovery Drilling Service**
Driller: **Stan Garrison**
Health Physicists: **N/A**

Drilling Method: **36" Core Barrel**
Well Casing Material: **18" SDR-11 HDPE**
Easting: **516,459.5**
Northing: **1,066,782.0**
GS Elevation: **489.0**
Drill Date(s): **12/20/2017**

Depth in Feet	Temperature (F)	Waste/Soil Description
-3		
0		
5	78.3	Brown Soil - Dry
10	116.3	Soil,Trace MSW - Little Decomposition - Dry
15	150	Soil (50%),Plastics - Some Decomposition - Dry
20	168.1	Soil (50%),Household - Moderate Decomposition - Wet
25	180	Soil (25%),Households,Plastics - Severe Decomposition - Saturated
30	190.5	Severe Decomposed MSW - Saturated
35	191.3	Severe Decomposed MSW - Saturated
40	192.8	Severe Decomposed MSW - Saturated
45		
50		
55		
60		

Well Completion Details

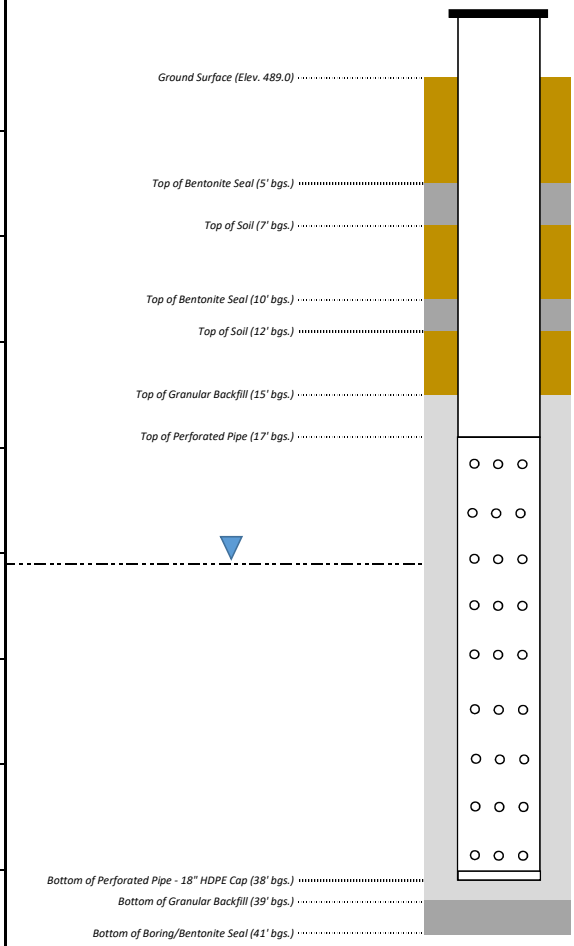

APPENDIX D

CONSTRUCTION CERTIFICATION DRAWINGS (REDUCED SET)

Drawing 000	Title Page
Drawing 001	GCCS Plan View
Drawing 002	Details

AS-BUILT DRAWINGS FOR THE

BRIDGETON LANDFILL
2017 GCCS IMPROVEMENTS

DECEMBER 2017
PREPARED FOR:

BRIDGETON LANDFILL, LLC
13570 ST. CHARLES ROCK ROAD
BRIDGETON, MISSOURI 63044

LOCATION MAP

N

Engineering for a Better World
FEEZOR
ENGINEERING, INC.

3377 HOLLENBERG DRIVE
BRIDGETON, MO 63044
TEL. (217) 483-3118

INDEX OF DRAWINGS

	TITLE PAGE
001	GCCS PLAN VIEW
002	DETAILS

STATE OF MISSOURI
DANIEL RICHARD FEEZOR
NUMBER PE-030292
PROFESSIONAL ENGINEER
1/18/18

D:\Dropbox (Feezor Engineering)\BT-143 (2017 GW Installation)\4 - Report\Appendicies\D - AB Drawings\BT-143-AB-000 (Title Sheet).dwg

LEGEND

	SOLID WASTE BOUNDARY
	QUARRY WALL
GEW-38	GAS EXTRACTION WELL
PEW-20	PERIMETER GAS EXTRACTION WELL
SEW-63	SURFACE EXTRACTION WELL
CT-1	CONDENSATE SUMP
PEW-20	PERIMETER GAS EXTRACTION WELL
GIW-1	GAS INTERCEPTOR WELL
GIW-4	GAS INTERCEPTOR WELL/HEAT EXTRACTION POINT
GEW-38(S)	GAS EXTRACTION WELL WITH 4" STINGER
GEW-38	INSTALLED 2017 GAS EXTRACTION WELL
4G	INSTALLED 4" LFG LATERAL
6G	INSTALLED 6" LFG LATERAL

0 60 120 Feet

NOTES:

- AERIAL TOPOGRAPHY PROVIDED BY COOPER AERIAL SURVEYS CO. AND IS DATED DECEMBER 2, 2016

BRIDGETON LANDFILL, LLC
13570 ST. CHARLES ROCK ROAD
BRIDGETON, MISSOURI 63044

BRIDGETON LANDFILL
2017 GCCS IMPROVEMENTS
AS-BUILT DRAWINGS

Engineering for a Better World
FEEZOR ENGINEERING, INC.

DECEMBER 2017
DESIGNED BY: AMR
APPROVED BY: DRF

DRAWING NO.: 001

GCCS PLAN VIEW

PROJECT NO: BT-143 | FILE PATH: 0:\Dropbox (Feezor Engineering)\BT-143 [2017 GW Installation]\4 - Report\Appendices\D - AB Drawings

REVISION	DATE

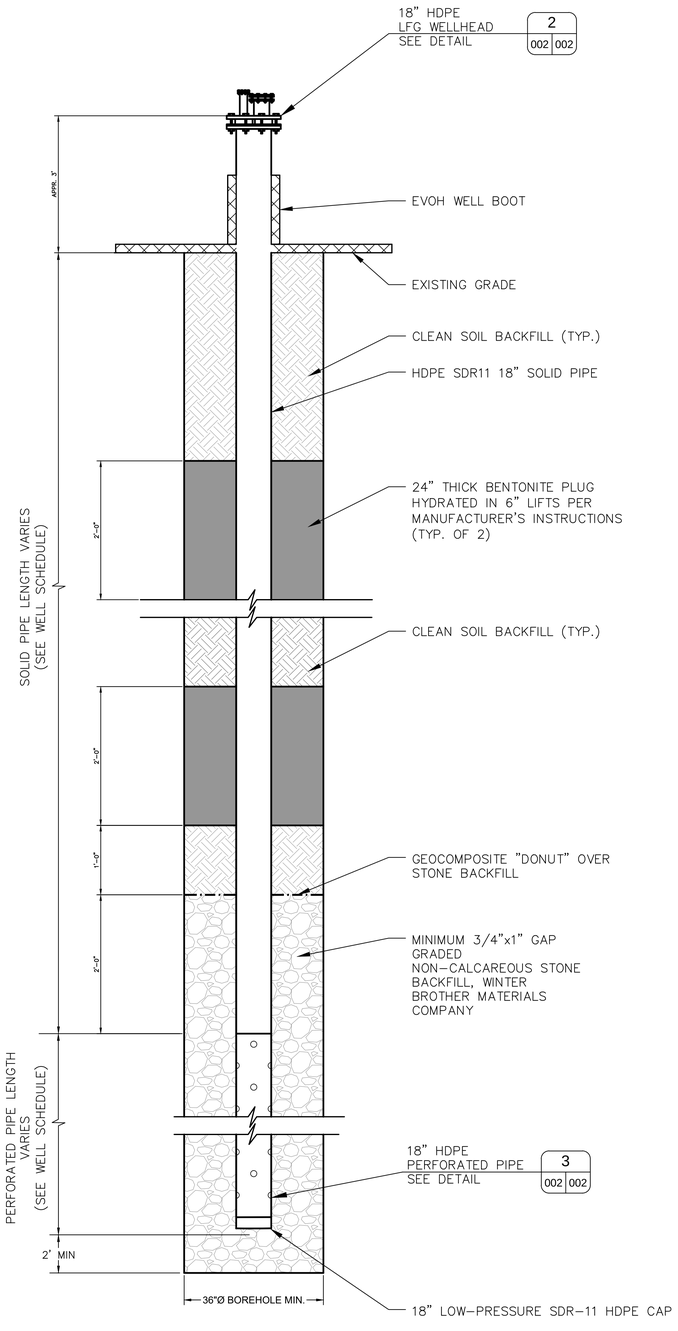

NOTES:

1. THE GAS WELL DEPTH, MATERIAL OF CONSTRUCTION, PERFORATION PATTERN AND BACKFILL MATERIAL WERE SPECIFIED BY BRIDGETON LANDFILL, LLC.

LFG EXTRACTION WELL DETAIL (1 / 001 002)

NOT TO SCALE

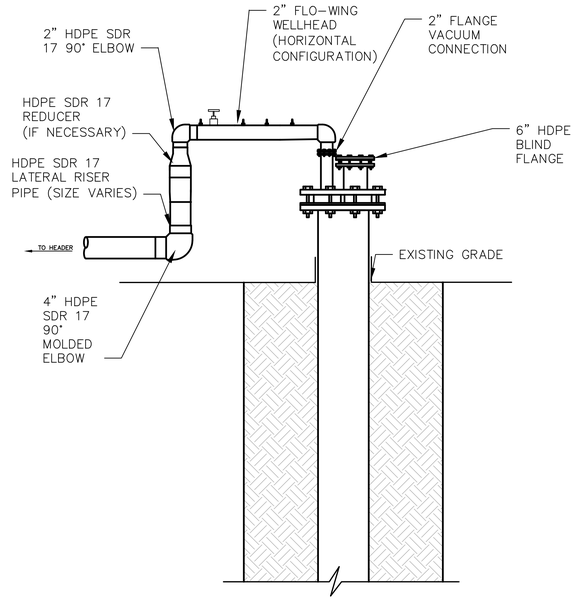

GEW WELLHEAD DETAIL (2 / 002 002)

NOT TO SCALE

NOTES:

1. CONTRACTOR INSTALLED BRIDGETON LANDFILL TYPICAL WELLHEAD.

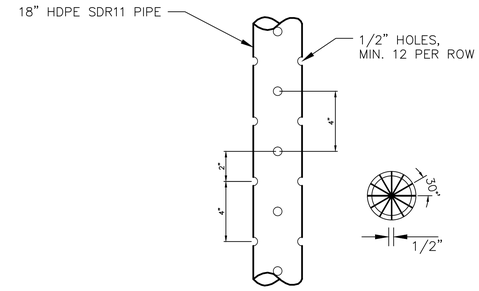

NOTES:

1. PERFORATIONS SPACED 30° APART HORIZONTALLY.
2. PERFORATIONS SPACED 4" APART VERTICALLY.
3. 90° AND 270° ROWS STAGGERED 2" BELOW 0° AND 180° ROWS.
4. THE MATERIAL OF CONSTRUCTION AND PERFORATION PATTERN WERE SPECIFIED BY BRIDGETON LANDFILL, LLC.

GEW PERFORATED PIPE DETAIL (3 / 002 002)

NOT TO SCALE

2017 WELL SCHEDULE

WELL ID	Northing	Easting	As-Built Survey (12/20/17)	Bottom of Boring	Quarry Bottom 1979 Topo	Db	Solid Pipe Above Grade	Solid Pipe Below Grade	Dp	Thickness of Gravel Pack
						Boring Depth			Perforated Pipe	
			(Feet MSL)	(Feet MSL)	(Feet MSL)	(Feet)	(Feet)	(Feet)	(Feet)	(Feet)
GEW-178	1,066,937.0	516,614.0	491.0	445.0	418.3	46	3	17	21	31
GEW-179	1,067,040.0	516,715.6	491.7	451.7	392.4	40	3	17	21	25
GEW-180	1,066,875.0	516,542.5	492.1	452.1	433.0	40	3	17	21	25
GEW-181	1,066,782.0	516,459.5	489.0	448.0	418.3	41	3	17	21	24
GEW-182	1,067,105.0	515,416.3	469.8	444.8	425.2	25	3	12	11	14
GEW-184	1,066,912.0	515,382.1	466.0	441.0	389.6	25	3	12	10	12
GEW-185	1,066,853.0	515,424.9	472.1	441.1	398.0	31	3	17	11	14
GEW-186	1,066,407.0	516,015.0	487.1	447.1	445.7	40	3	17	21	25
GEW-187	1,067,648.0	516,568.9	488.6	448.6	430.6	40	3	17	21	25
GEW-188	1,066,927.0	515,516.3	476.2	446.2	318.0	30	3	13	15	19

Notes: "Quarry Bottom" elevation taken from 1979 topography obtained from Aquaterra

NOTES:
- *AERIAL TOPOGRAPHY PROVIDED BY COOPER AERIAL SURVEYS CO. AND IS DATED DECEMBER 2, 2016*

BRIDGETON LANDFILL, LLC
13570 ST. CHARLES ROCK ROAD
BRIDGETON, MISSOURI 63044

BRIDGETON LANDFILL
2017 GCCS IMPROVEMENTS
AS-BUILT DRAWINGS

Engineering for a Better World
FEEZOR ENGINEERING, INC.

DECEMBER 2017
DESIGNED BY: AMR
APPROVED BY: DRF

DRAWING NO.: 002

GCCS DETAILS

PROJECT NO: BT-143 | FILE PATH: D:\Dropbox (Feezor Engineering)\BT-143 (2017 GW Installation)\4 - Report\Appendices\D - AB Drawings

REVISION | DATE