PERMIT BOOK

Missouri Department of Natural Resources
Missouri Air Conservation Commission
Air Pollution Control Program

PERMIT
TO
CONSTRUCT
PERMIT BY RULE

Under the authority of RSMo 643 and the Federal Clean Air Act the applicant is authorized to construct and operate the air contaminant source(s) described below, in accordance with the laws, rules, and conditions set forth here in.

Construction Permit Number: **042013-005**
Project Number: 2013-04-002
Installation ID: 095-0336

Installation Name and Address
Aspen Pet Cremations, LLC
3424 N.W. Duncan Street, Suite B
Blue Springs, MO 64015
Jackson County

Parent Company's Name and Address
Mr. Forrest Sim
Chief Operating Officer
Aspen Pet Cremations, LLC
3424 N.W. Duncan Street, Suite B
Blue Springs, MO 64015

Installation Description:
Installation and operation of a B & L Cremation Systems, Inc. Pet Crematory

APR 18 2013
Effective Date

Kyra L Moore
Director or Designee
Department of Natural Resources

STANDARD CONDITIONS:

Permission to construct may be revoked if you fail to begin construction or modification within two years from the effective date of this permit. Permittee should notify the Air Pollution Control Program if construction or modification is not started within two years after the effective date of this permit, or if construction or modification is suspended for one year or more.

You will be in violation of 10 CSR 10-6.060 and 10 CSR 10-6.062 if you fail to adhere to the specifications and conditions listed in your permit by rule application and this permit. Specifically, all air contaminant control devises shall be operated and maintained as specified in the application, associated plans and specifications.

You must notify the Department of Natural Resources Regional office responsible for the area within which the equipment is located within 15 days after the actual start up of this air contaminant source.

A copy of this permit and permit notification shall be kept at the installation address and shall be made available to Department of Natural Resources' personnel upon request.

You may appeal this permit or any of the listed special conditions as provided in RSMo 643.075. If you choose to appeal, the Air Pollution Control Program must receive your written declaration within 30 days of receipt of this permit.

If you choose not to appeal, this certificate, the project review, your application and associated correspondence constitutes your permit to construct. The permit allows you to construct and operate your air contaminant sources(s), but in no way relieves you of your obligation to comply with all applicable provisions of the Missouri Air Conservation Law, regulations of the Missouri Department of Natural Resources and other applicable federal, state and local laws and ordinances.

The Department of Natural Resources has established the Out reach and Assistance Center to help in completing future applications or fielding complaints about the permitting process. You are invited to contact them at 1-800-361-4827 or (573) 526-6627, or you can write to the Outreach and Assistance Center, P.O. Box 176, Jefferson City, MO 65102-0176.

The Air Pollution Control Program invites your questions regarding this air pollution permit. Please contact the Construction Permit Unit at (573) 751-4817. If you prefer to write, please address your correspondence to the Air Pollution Control Program, P.O. Box 176, Jefferson City, MO 65102-0176, Attention: Construction Permit Unit.

095-0336

MISSOURI DEPARTMENT OF NATURAL RESOURCES
AIR POLLUTION CONTROL PROGRAM
P.O. BOX 176, JEFFERSON CITY, MO 65102-0176

APPLICATION FOR AUTHORITY TO CONSTRUCT PERMIT BY RULE NOTIFICATION

CREMATORIES AND ANIMAL INCINERATORS

APCP USE ONLY	
CHECK NO. 003 Permit Received	CHECK RECEIVED (MM/DD/YY) 3-28-13
CHECK AMOUNT $700.00 / 600.00 / 100.00 Const PERM	CHECK DATE (MM/DD/YY) 3-27-13
PROJECT NO. 2013-04-002	PERMIT NO.

SECTION A: GENERAL NOTIFICATION INFORMATION – ALL NOTIFICATIONS MUST BE ACCOMPANIED BY A $700 FEE.

SECTION A-1: GENERAL INSTALLATION INFORMATION

1. INSTALLATION NAME: ASPEN PET CREMATIONS, LLC
2. FIPS:
3. PLANT NO.:
4. INSTALLATION STREET ADDRESS: 3424 N.W. DUNCAN STREET, SUITE B
5. INSTALLATION MAILING ADDRESS: SAME AS ABOVE
6. CITY: BLUE SPRINGS
STATE: MO
ZIP CODE: 64015
7. COUNTY NAME: JACKSON
8. 1/4, of 0 1/4, of 0 SECTION 26 TOWNSHIP 49N RANGE 31W
9. PARENT COMPANY: N/A
10. PARENT COMPANY MAILING ADDRESS: 3424 N.W. DUNCAN STREET, SUITE B
11. CITY: BLUE SPRINGS
STATE: MO
ZIP CODE: 64015
12. INSTALLATION CONTACT PERSON: FORREST SIM
13. CONTACT PERSON'S TITLE: CHIEF OPERATING OFFICER
14. CONTACT PERSON'S MAILING ADDRESS: 3424 N.W. DUNCAN STREET, SUITE B
15. INSTALLATION CONTACT TELEPHONE NO.: (970) 402-9476
16. INSTALLATION CONTACT FAX NO.: (816) 988-7891
17. INSTALLATION CONTACT E-MAIL ADDRESS: forrestsim@gmail.com
18. PROJECTED DATE TO COMMENCE CONSTRUCTION: 6/13
19. PROJECT DATE OF OPERATION STARTUP: 7/13

SECTION A-2: INSTALLATION DESCRIPTION

20. INSTALLATION AND OPERATION OF A B&L CREMATION SYSTEMS, INC., PET CREMATORY.

SECTION A-3: CERTIFICATION STATEMENT

I certify that I have personally examined and am familiar with the information in this application and believe that the information submitted is accurate and complete. I am aware that making a false statement or misrepresentation in this application is grounds for denying or revoking this permit.

21. SIGNATURE OF RESPONSIBLE OFFICIAL: Forrest
22. DATE: 3/26/13
23. TYPE OR PRINT NAME OF RESPONSIBLE OFFICIAL: FORREST SIM
24. RESPONSIBLE OFFICIAL'S TELEPHONE NUMBER: (970) 402-9476
25. TITLE OF RESPONSIBLE OFFICIAL: CHIEF OPERATING OFFICER

SECTION B: SPECIAL CONDITIONS FOR CREMATORIES AND ANIMAL INCINERATORS

Construction and operation of this new air pollution source is subject to the special conditions listed below. These special conditions are based on the authority granted to the Missouri Air Pollution Control Program by the Missouri Air Conservation Law (specifically RSMo. 643.075) and by the Missouri Rules listed in Title 10, Division 10 of the Code of State Regulations (specifically 10 CSR 10-6.062 *"Construction Permits by Rule"*).

Please indicate by marking the appropriate box as to whether or not the emission source complies with the rule listed in the applicable emission limit or standard. If any of the applicable emission source boxes are checked no, your source is not eligible for a crematories and animal incinerators permit by rule.

This Permit By Rule applies only to Crematories and Animal Incinerators constructed after October 31, 2003.

SPECIAL CONDITION	EMISSION SOURCE COMPLY?	APPLICABLE EMISSION LIMIT OR STANDARD	METHOD OF COMPLIANCE
10 CSR 10-6.062(3)(B)2.A.	☒ YES ☐ NO	The materials to be disposed of shall be limited to noninfectious human materials removed during surgery, labor and delivery, autopsy, or biopsy including body parts, tissues and fetuses, organs, bulk blood and body fluids, blood or tissue laboratory specimens, and other noninfectious anatomical remains or animal carcasses in whole or in part. The owner or operator shall minimize the amount of packaging fed to the incinerator, particularly plastic containing chlorine. The incinerators shall not be used to dispose of other non-biological medical wastes including, but not limited to, sharps, rubber gloves, intravenous bags, tubing, and metal parts.	Proper work practice.
10 CSR 10-6.062(3)(B)2.B.	☒ YES ☐ NO	The manufacturer's rated capacity (burn rate) shall be two hundred (200) pounds per hour or less.	Proper work practice.
10 CSR 10-6.062(3)(B)2.C.	☒ YES ☐ NO	The incinerator shall be a dual-chamber design.	Proper work practice.
10 CSR 10-6.062(3)(B)2.D.	☒ YES ☐ NO	Burners shall be located in each chamber, sized to manufacturer's specifications, and operated as necessary to maintain the minimum temperature requirements of subparagraph 10 CSR 10-6.062(3)(B)2.E. at all times when the unit is burning waste.	Proper work practice.
10 CSR 10-6.062(3)(B)2.E.	☐ YES ☐ NO	Excluding crematories, the second chamber must be designed to maintain a temperature of one thousand six hundred degrees Fahrenheit (1,600°F) or more with a gas residence time of one-half (1/2) second or more. The temperature shall be monitored with equipment that is accurate to plus or minus two percent (±2%) and continuously recorded. The thermocouples or radiation pyrometers shall be fitted to the incinerator and wired into a manual reset noise alarm such that if the temperature of either of the two (2) chambers falls below the minimum temperature above, the alarm will sound at which time plant personnel shall take immediate measures to either correct the problem or cease operation of the incinerator until the problem is corrected	Proper work practice and maintenance of proper alarm records. These records shall be maintained for not less than five (5) years, and they shall be immediately available to any Missouri Department of Natural Resources personnel upon request.
10 CSR 10-6.062(3)(B)2.F.	☒ YES ☐ NO	There shall be no obstruction to stack flow, such as by rain caps, unless such devices are designed to automatically open when the incinerator is operated. Properly installed and maintained spark arresters are not considered obstructions.	Proper work practice.

SECTION B: SPECIAL CONDITIONS FOR CREMATORIES AND ANIMAL INCINERATORS (CONTINUED)			
SPECIAL CONDITION	**EMISSION SOURCE COMPLY?**	**APPLICABLE EMISSION LIMIT OR STANDARD**	**METHOD OF COMPLIANCE**
10 CSR 10-6.062(3)(B)2.G.	☒ YES ☐ NO	Each incinerator operator shall be trained in the incinerator operating procedures as developed by the American Society of Mechanical Engineers (ASME), by the incinerator manufacturer, or by a trained individual with more than one (1) year experience in the operation of the incinerator that the trainee will be operating. Minimum training shall include basic combustion control parameters of the incinerator and all emergency procedures to be followed should the incinerator malfunction or exceed operating parameters. An operator who meets the training requirements of this condition shall be on duty and immediately accessible during all periods of operation. The manufacturer's operating instructions and guidelines shall be posted at the unit and the unit shall be operated in accordance with these instructions.	Proper work practice and maintenance of proper operator training records. These records shall be maintained for not less than five (5) years, and they shall be immediately available to any Missouri Department of Natural Resources personnel upon request.
10 CSR 10-6.062(3)(B)2.H.	☒ YES ☐ NO	The incinerator shall have an opacity of less than ten percent (10%) at all times.	Proper work practice such that no opacity violations are noted.
10 CSR 10-6.062(3)(B)2.I.	☒ YES ☐ NO	Heat shall be provided by the combustion of natural gas, liquid petroleum gas, or Number 2 fuel oil with less than three-tenths percent (0.3%) sulfur by weight, or by electric power.	Proper work practice.
10 CSR 10-6.062(3)(B)2.J.	☒ YES ☐ NO	The operator shall maintain a log of all alarm trips and the resulting action taken. A written certification of the appropriate training received by the operator, with the date of training, that includes a list of the instructor's qualifications or ASME certification school shall be maintained for each operator. The operator shall maintain an accurate record of the monthly amount and type of waste combusted.	Determined through proper alarm and operator training record keeping. These records shall be maintained for not less than five (5) years, and they shall be immediately available to any Missouri Department of Natural Resources personnel upon request.

SECTION C: OTHER POTENTIALLY APPLICABLE REQUIREMENTS

This section is intended to identify regulations that may apply to this installation. There may be others not listed that apply. To determine rule applicability and specific standards please consult the appropriate sections in the Code of Federal Regulations (CFR) and Code of State Regulations (CSR) for the full text of the applicable requirements.

Please note: this permit allows you to construct and operate your air contaminant source(s), but in no way relieves you of your obligation to comply with all applicable provisions of the Missouri Air Conservation Law, regulations of the Missouri Department of Natural Resources, and other applicable federal, state, and local laws and ordinances.

REGULATION OR CONSTRUCTION PERMIT REFERENCE	APPLICABLE EMISSION LIMIT OR STANDARD	METHOD OF COMPLIANCE
10 CSR 10-2.100, 10-3.030, or 10-4.090, 10-5.070 Open Burning Restrictions	Shall not conduct, cause, permit or allow a salvage operation, the disposal of trade wastes or burning of refuse by open burning.	Any person intending to engage in open burning shall submit a request to the Director.
10 CSR 10-2.070, 10-3.090 or 10-4.070, Restriction of Emission of Odors	No person may cause, permit or allow the emission of odorous matter in concentrations and frequencies or for durations that odor can be perceived when air is diluted to 1:7 volumes of odorous to odor-free air for 2 separate trails not less than 15 minutes apart within 1 hour.	No odor violations noted, if and when scentometer readings are taken.
10 CSR 10-5.160 Control of Odors in the Ambient Air	No person shall emit odorous matter as to cause an objectionable odors unless within the limits established by this rule.	No odor violations noted, if an when scentometer readings are taken.
10 CSR 10-5.170 Control of Odors From Processing Animal Matter	No person shall operate or use any device, machine, equipment, or other contrivance for the reduction of animal matter unless all gases, vapors, and gas-entrained effluents from the facility are incinerated at a temperature of not less than 1,200°F for a period of not less than 0.3 seconds and otherwise in compliance with this rule.	Proper work practice.
10 CSR 10-6.050, Start-up, Shutdown and Malfunction Conditions	Shall not commence construction or modification of any installation subject to this rule; begin operation after construction or modification; or begin operation of any installation which has been shut down longer than 5 years without first obtaining a permit.	In the event of a malfunction, which results in excess emissions that exceed 1 hour, the permittee shall implement corrective action and submit reports.
10 CSR 10-6.065, Operating Permits	The permittee shall comply with all applicable requirements identified in the operating permit (OP); file for timely renewal of this OP; and retain a copy of the OP on-site and make available to any MDNR personnel upon request.	The permittee shall submit an annual compliance certification in accordance with the regulation. The permittee shall maintain a current equipment list on-site with the date of installation of the equipment.
10 CSR 10-6.110, Submission of Emission Data, Emission Fees and Process Information	Submittal of Emission Inventory Questionnaire (EIQ) and emission fees by frequency noted in 10 CSR 10-6.110.	The permittee shall complete and submit an EIQ in accordance with 10 CSR 10-6.110.
10 CSR 10-6.200 Hospital, Medical, Infectious Waste Incinerators	No owner or operator shall cause to be discharged into the atmosphere any gases that contain stack emissions in excess of those listed in 10 CSR 10-6.200(3)(A).	Proper work practice and maintenance of appropriate performance test results.
10 CSR 10-6.070 New Source Performance Regulations	The following federal NSPS standards may apply: (Ec) Medical Waste Incinerators. Standards of Performance for Incinerators.	As required by regulations.

MISSOURI DEPARTMENT OF NATURAL RESOURCES
AIR POLLUTION CONTROL PROGRAM

APPLICATION FOR AUTHORITY TO CONSTRUCT PERMIT BY RULE NOTIFICATION

CREMATORIES AND ANIMAL INCINERATORS

INSTRUCTIONS

By submitting your notification, you are accepting all conditions and terms stated in this form. If you find the special conditions listed in Section B unacceptable, you may choose to submit a construction permit application and undergo a case-by-case review.

Please refer to the following line-by-line instructions to complete the notification. The notification, along with the $700.00 fee, should be mailed to:

Air Pollution Control Program
Permit-By-Rule
P.O. Box 176
Jefferson City, Missouri 65102

You must also retain a copy of the notification at the installation and make it immediately available to any inspector.

Once the fee and notifications have been mailed or hand-delivered, you are free to begin construction of your project under the special conditions that you have accepted.

The Air Pollution Control Program will send you a letter acknowledging receipt of your notification with a permit number and a project number for agency tracking purposes.

A copy of this electronic package may be obtained from the Department of Natural Resources Air and Land Protection Division's web site at: http://www.dnr.mo.gov/alpd/apcp/PermitInfo.htm.

If you have any questions about the notification form or the permit-by-rule notification procedure, please feel free to contact the Permit Section at (573) 751-4817.

NOTIFICATION FORM INSTRUCTIONS

1.) **Installation Name:** Enter the official company name and/or plant designation for the installation that is making the permit-by-rule notification.

2.) **FIPS Number:** Enter the official FIPS Number (3 digit code) which corresponds to the county name for the county in which the installation is located. Please refer to http://www.itl.nist.gov/fipspubs/co-codes/mo.txt for a listing. The FIPS number in combination with the Plant Number provides the identification/tracking information for the installation in the State/Federal databases.

3.) **Plant Number:** Enter the official Plant Number that has been assigned to the installation by the respective State or Local Agencies. If you do not know your plant number, please leave blank.

4.) **Installation Street Address:** Enter the street address of the physical location of installation.

5.) **Installation Mailing Address:** Enter the mailing address if that address is different from the street address.

6.) **City, State and Zip Code:** Enter the City, State and Zip Code of the physical location of the installation.

7.) **County:** Enter the county in which the installation is located.

8.) **Section, Township, Range:** Enter the appropriate information on the Section, Township and Range in which the installation is located.

9.) **Parent Company:** Complete this block if this installation is totally or partially owned by another company.

10.) **Parent Company Mailing Address:** Complete this block if this installation is totally or partially owned by another company.

11.) **Parent Company City, STate and Zip Code:** Complete this block if this installation is totally or partially owned by another company.

12.) **Installation Contact Person:** Enter the name of the person who is most familiar with the operations of the installation and who can answer any questions regarding information about the installation.

13.) **Contact Person's Title:** Enter the title of the contact person.

14.) **Contact Person's Mailing Address:** Enter the mailing address for the Contact Person.

15.) **Installation Contact Person's Telephone Number:** Enter the Contact Person's telephone number.

16.) **Installation Contact Person's Fax Number:** Enter the Contact Person's fax number.

NOTIFICATION FORM INSTRUCTIONS (CONTINUED)

17.) **Installation Contact Person's E-Mail Address:** Enter the Contact Person's e-mail address.

18.) **Projected Date to Commence Construction:** Enter the date you intend to commence construction of your installation.

19.) **Projected Date of Operation Startup:** Enter the date you plan to begin operation with the installation.

20.) **Installation Description:** Enter the general product manufactured, the material handled by your installation and principal activity that is performed at this installation.

21.) **Signature of Responsible Official:** Enter the signature of the installation's official, certifying that the notification is accurate and complete. Notifications without a signed certification are not considered complete. A responsible official is:

1. The president, secretary, treasurer or vice-president of a corporation in charge of a principal business function, or any other person who performs similar policy and decision-making functions for the corporation or a duly authorization representative of this person if the representative is responsible for the overall operation of one or more manufacturing, production, or operating facilities applying for or subject to a permit and either-

   a) The facilities employ more than 250 person or have a gross annual sales or expenditures exceeding twenty-five million dollars (in second quarter 1980 dollars); or

   b) The delegation of authority to his representative is approved in advance by the permitting authority.

2. A general partner in a partnership or the proprietor in a sole proprietorship.

3. Either a principal executive officer or a ranking elected official in a municipality, state, federal, or other public agency. For the purpose of this part, a principal executive officer of a federal agency includes the chief executive officer having responsibility for the operations of a principal geographic unit of the agency; or

4. The designated representative of an affected source insofar as actions, standards, requirements or prohibitions under Title IV of the Clean Air Act or the regulations promulgated under the Act are concerned or the designated representative for any purposes under Part 70.

22.) **Date:** Enter the date that the Signature of the Responsible Official was obtained.

23.) **Type or Print Name of Responsible Official:** Type or print the name of the Responsible Official signing in item 21.

24.) **Responsible Official's Telephone Number:** Enter the telephone number where the Responsible Official may be contacted who signed in item 21.

25.) **Title of Responsible Official:** Enter the official title of the Responsible Official from item 21.

2013-04-002
Permit-By-Rule

RECEIVED
2013 MAR 28 AM 8:10
AIR POLLUTION CONTROL PGM

MISSOURI DEPARTMENT OF NATURAL RESOURCES
AIR POLLUTION CONTROL PROGRAM

EMISSIONS INVENTORY QUESTIONNAIRE, OR EIQ
FORM 1.0 GENERAL PLANT INFORMATION

☐ **Request Confidentiality - see instructions to initiate the confidentiality request.**

FACILITY NAME	FIPS COUNTY NO.	PLANT NO.	YEAR OF DATA
ASPEN PET CREMATIONS, LLC			2013

FACILITY STREET ADDRESS	COUNTY NAME
3424 N.W. DUNCAN STREET, SUITE B	JACKSON

CITY	ZIP CODE +4	PHONE NUMBER WITH AREA CODE	EXT.	FAX NUMBER WITH AREA CODE
BLUE SPRINGS	64015	970-402-9476		816-988-7891

FACILITY MAILING ADDRESS	CITY	STATE	ZIP CODE +4
3424 N.W. DUNCAN STREET, SUITE B	BLUE SPRINGS	MO	64015

FACILITY CONTACT NAME	FACILITY CONTACT TITLE	FACILITY CONTACT E-MAIL	WHERE TO SEND EIQ IN FUTURE (CHECK ONE)
FORREST SIM	Chief Operating Officer	forrestsim@gmail.com	[X] Facility Mailing Address [ ] Parent Company Mailing Address

PRODUCT/PRINCIPAL ACTIVITY	SIC	NAICS	NUMBER OF EMPLOYEES
PET CREMATORY	7261	812210	2

	LATITUDE	LONGITUDE	UTM COORDINATES				
			ZONE	EASTING (M)	NORTHING (M)	ACC (M)	HORIZONTAL DATUM (CHECK ONE)
DEGREES	39	-94	15	387125.1	4321701.4		☐ NAD27 ☐ WGS84 ☐ NAD83
MINUTES	2	18					
SECONDS	13.5126	15.0726					

PARENT COMPANY NAME	PHONE NUMBER WITH AREA CODE	EXT.	FAX NUMBER WITH AREA CODE
ASPEN PET CREMATIONS, LLC	970-402-9476		816-988-7891

MAILING ADDRESS	CITY	STATE	ZIP CODE +4
3424 N.W. DUNCAN STREET, SUITE B	BLUE SPRINGS	MO	64015

CONTACT PERSON NAME	CONTACT PERSON TITLE	CONTACT PERSON E-MAIL	COUNTRY
FORREST SIM	Chief Operating Officer	forrestsim@gmail.com	USA

TOTAL PLANT EMISSIONS FROM FORM 3.0 (TONS PER YEAR)

PM_{10}	SO_X	NO_X	VOC	CO	LEAD	HAPs	$PM_{2.5}$	NH_3

The undersigned hereby certifies that they have personally examined and are familiar with the information and statements contained herein and further certifies that they believe this information and statements to be true, accurate and complete. The undersigned certifies that knowingly making a false statement or misrepresenting the facts presented in this document is a violation of state law.

PRINT NAME OF PERSON COMPLETING FORM	TITLE	PAYMENT AMOUNT
FORREST SIM	Chief Operating Officer	
SIGNATURE Forrest Sim	DATE 3/26/13	CHECK/AUTH. NO.
PRINT NAME OF AUTHORIZED COMPANY REPRESENTATIVE	TITLE	PAYMENT DATE
Forrest Sim	Chief Operating Officer	
SIGNATURE Forrest Sim	DATE 3/26/13	

CONTACT INFORMATION

Missouri Department of Natural Resources
Air Pollution Control Program
1659 E. Elm St.
Jefferson City, MO 65101
573-751-4817
www.dnr.mo.gov/env/apcp/moeis/emissionsreporting.htm
eiq@dnr.mo.gov

OFFICE USE ONLY	
LOGGED IN BY	DATE

MO 780-1431 (12-09)

Site Map

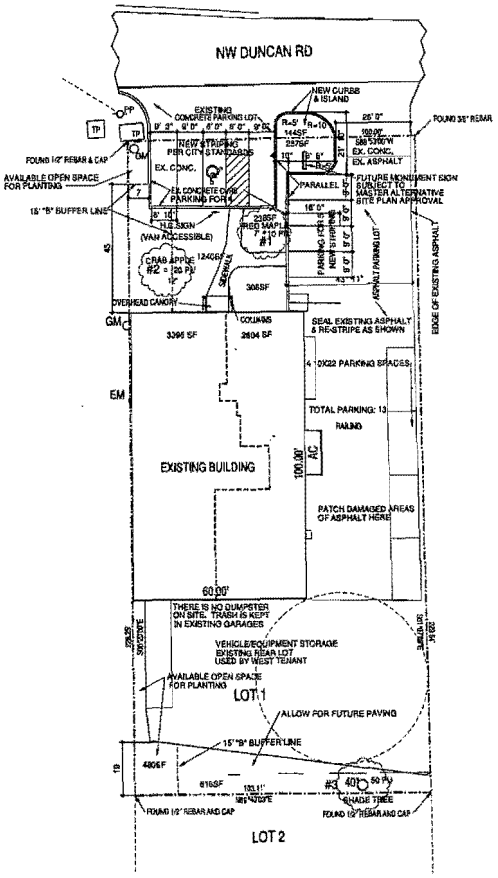

SITE PLAN

NORTH 1" = 20' 0" (WHEN PRINTED @ 24X36)

EXISTING TREES

TREE #1: 7" DIAMETER @ 4.5' ABOVE FIN. GR.
6 1/4-10" = 20 PU

TREE #2: 11" DIAMETER @ 4.5' ABOVE FIN. GR.
10 1/4-15" = 30 PU

TREE #3 (CLUMP) : 22", 13", 7", 8", 5" @ 4.5' ABOVE FIN. GR.
(22") 15 1/4+ = 10 PU/5" = 40 PU (13") 10 1/4115 = 30 PU
MAX FOR A TREE = 50 PU

LANDSCAPE MATRIX TABLE

PARCEL ZONING: LI	BUFFER DETAILS			CALCULATIONS	W/ CREDITS	PROPOSED PLANT UNITS				SUBTOTALS	
LOCATION OF BUFFER	(LENGTH OF PROPERTY LINE)	BUFFER TYPE	BUFFER WIDTH	PLANT UNIT CALCULATION	SUBTOTAL (SUBTRACT FOR EXISTING PU)	SHADE TREES	ORNAMENTAL TREES	CONIFERS OR UPRIGHT EVERGREENS	SHRUBS	TOTAL PROPOSED PLANT UNITS	ABOVE/ BELOW REQUIRED PUs
NORTH PROPERTY LINE (ARTERIAL)	7'*	B	15	7/100X45 3 PU REQ.							
EAST PROPERTY LINE (ZONING LI)	N/A	N/A	N/A								
SOUTH PROPERTY LINE (ZONING LI)	N/A	N/A	N/A								
WEST PROPERTY LINE (ZONING CB)	64'*	B	15	64/100X45 29 PU REQ.	-30 0 PU REQ.	7.5		27.5	8	43	+43
PARKING LOT LANDSCAPING (20 PU PER 10 PARKING SPACES)		N/A	N/A	13/10X20 26 PU REQ.	-20 6 PU REQ.	7.5			13	20.5	+14.5
OPEN SPACE LANDSCAPING	23,246 SF	N/A	N/A	23,246/1000X2 46 PU REQUIRED	-50 0 PU REQ.				6		+6
PU CREDITS FOR EXISTING TREES				10 PU FOR EACH 5" OF DIAMETER UP TO 50 PU		T#1 = 20 PU APPLY TO PARKING	T#2 = 30 PU APPLY TO WEST BUFFER				
						T#3 = 50 PU APPLY TO OPEN SPACE					
CUMULATIVE TOTALS						85	30	27.5	27	63.5	

*ADJUSTED EFFECTIVE LENGTH DUE TO EXISTING BUILDING OR EXISTING PARKING LOT IN AREAS OTHERWISE AVAILABLE FOR PLANTINGS

LEGAL DESCRIPTION

LOT 1, DUNCAN PLAZA 1st PLAT

ADDITIONAL INFORMATION

BLDG AREA: 6,000 sf GROSS.
SITE AREA: 23,248 sf.
BUILDING IS 25.8% OF SITE.
EXISTING ZONING: LI

THIS TENANT (EAST SIDE):
AREA OF LEASE = 2604 SF
ANTICIPATED MAXIMUM PARKING REQUIREMENTS = 7
ORDINANCE: 2604 SF @ 400SF/PARKING SPACE = 7
FUTURE POSSIBILITY FOR THIS SIDE OF BUILDING:
2604 SF GENERAL OFFICE = 9 PARKING SPACES @ 300 SF/ PARKING SPACE
BETWEEN 6 & 8 PARKING SPACES LEFT FOR WEST TENANT

POTENTIAL CURB ON EAST SIDE

OWNER AND ARCHITECT AGREE THAT OUR ADDING ADDITIONAL LANDSCAPING ALONG THE FRONT AND ON THE WEST SIDE IS OF FAR MORE VALUE THAN BUILDING A CONCRETE CURB ON THE EAST SIDE OF THE EXISTING ASPHALT PARKING LOT (WHICH IS OF QUESTIONABLE VALUE).

THEREFORE, WE HAVE SHOWN PLANTINGS WHICH ADD TO THE BEAUTIFICATION OF THE PUBLIC IMPROVEMENTS TO THE WEST.

NOTES

LANDSCAPE CONTRACTOR TO FOLLOW THE CITY LANDSCAPE ORDINANCE.
LANDSCAPE CONTRACTOR TO FOLLOW ALL ACCEPTED STANDARDS OF QUALITY.
ALL TREES SHALL BE STAKED.
LOOSEN SUBGRADE TO A MINIMUM DEPTH OF 4"
REMOVE STONES LARGER THAN 1" IN ANY DIRECTION.
REMOVE STICKS, ROOTS, TRASH, AND OTHER EXTRANEOUS MATTER.
PLANTING BEDS TO HAVE 9"-12" TOPSOIL.
PROVIDE MULCH IN PLANTING BEDS.
SEED ALL NON-SODED LAWN AREAS WITH NOT SODDED OR W/ K-31 FESCUE.
PROTECT SEEDED AREAS WITH STRAW MULCH.
SOD TO BE TURF TYPE FESCUE.
LAY SOD WITHIN 24 HOURS OF HARVESTING.

LANDSCAPE KEY

TREES

Symbol	Species	Size	PUs	Quantity
	Autumn Purple Ash (APA) Fraxinus Americana	2"Ø	7.5	
	Amur Maple (AM) Acer Ginnala	2"Ø	7.5	
	Bowhall Maple (BM) Acer Rubrum 'Bowhall'	2"Ø	7.5	2
	Sargent Crabapple (SC) Malus Sargenti	1 1/2"Ø	5	
	Snowdrift Crabapple (SDC) Malus Sp	1 1/2"Ø	5	
	Eastern White Pine (EWP) Pinus Strebus	6' ht / 4' ht	5 / 2.5	
	Eastern Red Cedar (ERC) Pinus Strebus	6' ht / 4' ht	5 / 2.5	
	Canaerti Juniper (CJ) Juniperus Virginiana	6' ht / 4' ht	5 / 2.5	11

SHRUBS

Symbol	Species (1 PU Each)	Size	Quantity
	Leatherleaf Viburnum (LV) VIBURNUM SP	5 GAL CONT. 18" HT/SPD	
	Stella DeOro Lily (SDO) HEMOROCALLIS 'STELLA DEORO'	5 GAL CONT. 18" HT/SPD	6
	Little Princess Spirea (LPS) SPIREA JAPONICA	5 GAL CONT. 18" HT/SPD	
	Burning Bush (BB) EUONYMOUS ALATUS COMPACTA	5 GAL CONT. 18" HT/SPD	7
	Blue Rug Juniper (BRJ) JUNIPEROUS HORIZONTALIS	5 GAL CONT. 18" HT/SPD	
	Sea Green Juniper (SGJ) JUNIPEROUS HORIZONTALIS	5 GAL CONT. 18" HT/SPD	
	Grey Owl Juniper (GOJ) JUNIPERUS VIRGINIANCA	5 GAL CONT. 18" HT/SPD	5
	Boxwood (BW) BUXUS MICROPHYLLA	5 GAL CONT. 18" HT/SPD	9

Wind direction

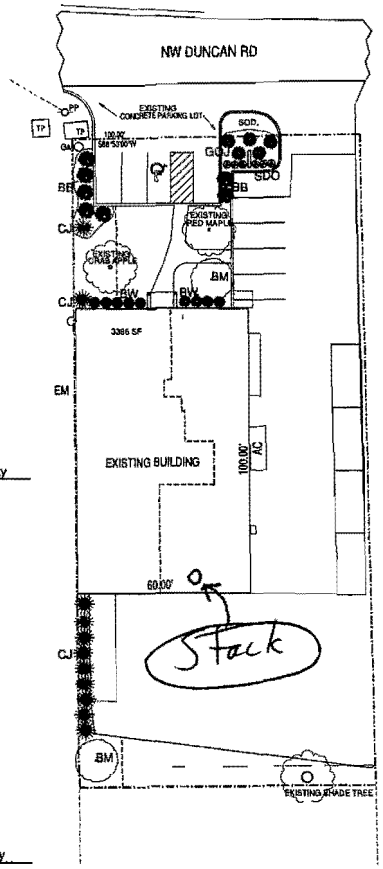

ALTERNATIVE LANDSCAPE PLAN

NORTH 1" = 20' 0" (WHEN PRINTED @ 24X36)

Building height: 12'

AsB 1/25/13
Sch 2/7/13
Pr 2/11/13
Rev
D/P
Rev
W/D

A NEW HOME FOR:
ASPEN PET CREMATION
3424 N.W. DUNCAN RD.
BLUE SPRINGS, MISSOURI

the ARCHITECTS
ARCHITECTURE, PLANNING, ENGINEERING
ROY E. BROWNE, ARCHITECT & ASSOCIATES
24 OAK HILL CLUSTER/ INDEPENDENCE, MO/64057

SP-1

MISSOURI DEPARTMENT OF NATURAL RESOURCES
AIR POLLUTION CONTROL PROGRAM

EMISSIONS INVENTORY QUESTIONNAIRE, OR EIQ
FORM 1.1 PROCESS FLOW DIAGRAM

FACILITY NAME	FIPS COUNTY NO.	PLANT NO.	YEAR OF DATA
ASPEN PET CREMATIONS, LLC			2013

Use this page or a separate sheet to provide a Process Flow Diagram per the instructions for Form 1.1 in the Instruction Packet. Do not forget to include all processes used in your facility. Make sure to label each process and piece of equipment and provide an identification number for all emission units (including fugitive emissions) and air pollution control equipment. Make sure to use the same identification number throughout the entire EIQ.

MISSOURI DEPARTMENT OF NATURAL RESOURCES
AIR POLLUTION CONTROL PROGRAM

EMISSIONS INVENTORY QUESTIONNAIRE, OR EIQ
FORM 1.2 SUMMARY OF EMISSION UNITS AND RELATED PROCESSES

FACILITY NAME	FIPS COUNTY NO.	PLANT NO.	YEAR OF DATA
ASPEN PET CREMATIONS, LLC			2013

INSTRUCTIONS

If all emissions are under the reporting threshold, mark below as "Insignificant", and do not report on Forms 2.0 and 3.0.
If one pollutant exceeds the reporting threshold, mark below as "Active" and report all pollutants on Forms 2.0 and 3.0.

REPORTING THRESHOLD

Pollutant	PM_{10}	SO_x	NO_x	VOC	CO	CATEGORY 1 HAPs	CATEGORY 2 HAPs	$PM_{2.5}$	NH_3
Threshold (lbs)	876	2,000	2,000	876	2,000	20	200	876	876
Threshold (tons)	0.438	1.0	1.0	0.438	1.0	0.01	0.1	0.438	0.438

EMISSION UNIT NO. / SCC	EMISSION UNIT DESCRIPTION (USE SAME DESCRIPTION ON FORM 2.0)	OPERATING STATUS (CHOOSE ONE)				
		Active	Inactive	Dismantled	Under Construction	Insignificant
	BL-01				X	X

MO 780-1620 (12-09)

MISSOURI DEPARTMENT OF NATURAL RESOURCES
AIR POLLUTION CONTROL PROGRAM

EMISSIONS INVENTORY QUESTIONNAIRE, OR EIQ
FORM 2.0 EMISSION UNIT INFORMATION

FACILITY NAME	FIPS COUNTY NO.	PLANT NO.	YEAR OF DATA
ASPEN PET CREMATIONS, LLC			2013

1. EMISSION UNIT IDENTIFICATION

EMISSION UNIT NO.	EMISSION UNIT DESCRIPTION
BL-01	PET CREMATORY

2. EMISSION PROCESS DETAIL

SEG. NO.	SOURCE CLASSIFICATION CODE (SCC)	SCC DESCRIPTION

DO THE EMISSIONS FROM THIS UNIT FLOW THROUGH A STACK OR VENT? [X] Yes [ ] No IF YES, COMPLETE *FORM 2.0S STACK/VENT INFORMATION*

ARE THE EMISSIONS FROM THIS UNIT FUGITIVE? [ ] Yes [X] No IF FUGITIVE, WHAT PERCENTAGE?

3. OPERATING RATE/SCHEDULE

ANNUAL THROUGHPUT	UNITS	DEC-FEB (%)	MAR-MAY (%)	JUN-AUG (%)	SEPT-NOV (%)
		25	25	25	25

HOURS / DAY	DAYS / WEEK	WEEKS / YR.	TOTAL HOURS / YR.
10	6	52	312

4. ANNUAL FUEL CHARACTERISTICS

For coal or fuel oil, list details below

Heat Content (BTU/Fuel Unit)	NAT GAS
ASH % (INCLUDE IN EF)	NEG
SULFUR % (INCLUDE IN EF)	NEG

5. EMISSION CALCULATIONS

AIR POLLUTANT	1. SOURCE OF EMISSION FACTOR	2. EMISSION FACTOR	3. EMISSION FACTOR (EF) CONTROL STATUS	4. OVERALL CONTROL EFFICIENCY (% FORMAT)	5. ACTUAL EMISSIONS (TONS/YR)	Annual Throughput × Emission Factor × (1-Overall Control Eff/100) ÷ 2,000 = Actual Emissions (tons)
Instructions:	Choose from the Source of Emission Factor List at lower right	Lbs./unit of throughput	If EF includes control mark "C", otherwise "U"	Combination of all capture and destruction efficiencies	If controlled, include *Form 2.0C Control Device Listing*	List Other Worksheets or AP-42/Other Reference
PM_{10}						
SO_X						
NO_X						
VOC						
CO						
LEAD						
HAPs						
$PM_{2.5}$						
NH_3						

SOURCE OF EMISSION FACTOR LIST	
1. CEM	Include documentation
2. Stack Test	Include documentation
3. Mass Balance	Include documentation
4. AP-42	Include reference
4F. FIRE or webFIRE	
5. Other	Include documentation
EC. Engr Calc	Include documentation
LS. Landfill Spdsht	Include documentation
TK. TANKS Program	Supply TANKS output
2.3. VOC Mass Bal	Complete Form 2.3
2.4. Liquid Loading	Complete Form 2.4
2.7. Haul Road	Complete Form 2.7
2.8. Storage Pile	Complete Form 2.8
2.T. HAP Worksheet	Complete Form 2.T
2.9. Stack Test/CEM	Complete Form 2.9
2.0L. Landfill	Complete Form 2.0L

MISSOURI DEPARTMENT OF NATURAL RESOURCES
AIR POLLUTION CONTROL PROGRAM

EMISSIONS INVENTORY QUESTIONNAIRE, OR EIQ
FORM 2.0C CONTROL DEVICE INFORMATION

FACILITY NAME	FIPS COUNTY NO.	PLANT NO.	YEAR OF DATA
ASPEN PET CREMATIONS, LLC			2013

EMISSION UNIT NO.	SOURCE CLASSIFICATION CODE (SCC)	SEG. NO.	DEVICE NO.	DEVICE CODE
BL-1				

CONTROL DEVICE DESCRIPTION	OPERATING STATUS (CHECK ONE)
AFTERBURNER	[X] Active [ ] Inactive [ ] Dismantled

ARE THE EMISSIONS CONTROLLED THROUGH THE STACK/VENT ONLY? [X] Yes [ ] No

LIST ALL STACK/VENT NUMBERS SHARING THIS CONTROL DEVICE (LISTED ON *FORM 2.0S STACK/VENT INFORMATION*) BL-1

AIR POLLUTANT	PM_{10}	SO_X	NO_X	VOC	CO	LEAD	HAP(s)	$PM_{2.5}$	NH_3
CAPTURE EFFICIENCY (%)									
CONTROL DEVICE EFFICIENCY (%)									
SOURCE OF EFFICIENCY (CODES)									

CAS NUMBER(S) FOR CONTROLLED HAPS

EMISSION UNIT NO.	SOURCE CLASSIFICATION CODE (SCC)	SEG. NO.	DEVICE NO.	DEVICE CODE

CONTROL DEVICE DESCRIPTION	OPERATING STATUS (CHECK ONE)
	[ ] Active [ ] Inactive [ ] Dismantled

ARE THE EMISSIONS CONTROLLED THROUGH THE STACK/VENT ONLY? [ ] Yes [ ] No

LIST ALL STACK/VENT NUMBERS SHARING THIS CONTROL DEVICE (LISTED ON *FORM 2.0S STACK/VENT INFORMATION*)

AIR POLLUTANT	PM_{10}	SO_X	NO_X	VOC	CO	LEAD	HAP(s)	$PM_{2.5}$	NH_3
CAPTURE EFFICIENCY (%)									
CONTROL DEVICE EFFICIENCY (%)									
SOURCE OF EFFICIENCY (CODES)									

CAS NUMBER(S) FOR CONTROLLED HAPS

EMISSION UNIT NO.	SOURCE CLASSIFICATION CODE (SCC)	SEG. NO.	DEVICE NO.	DEVICE CODE

CONTROL DEVICE DESCRIPTION	OPERATING STATUS (CHECK ONE)
	[ ] Active [ ] Inactive [ ] Dismantled

ARE THE EMISSIONS CONTROLLED THROUGH THE STACK/VENT ONLY? [ ] Yes [ ] No

LIST ALL STACK/VENT NUMBERS SHARING THIS CONTROL DEVICE (LISTED ON *FORM 2.0S STACK/VENT INFORMATION*)

AIR POLLUTANT	PM_{10}	SO_X	NO_X	VOC	CO	LEAD	HAP(s)	$PM_{2.5}$	NH_3
CAPTURE EFFICIENCY (%)									
CONTROL DEVICE EFFICIENCY (%)									
SOURCE OF EFFICIENCY (CODES)									

CAS NUMBER(S) FOR CONTROLLED HAPS

MISSOURI DEPARTMENT OF NATURAL RESOURCES
AIR POLLUTION CONTROL PROGRAM

EMISSIONS INVENTORY QUESTIONNAIRE, OR EIQ
FORM 2.0Z OZONE SEASON INFORMATION - EMISSIONS STATEMENT

FACILITY NAME	FIPS COUNTY NO.	PLANT NO.	YEAR OF DATA
ASPEN PET CREMATIONS, LLC			2013

OPERATING RATE/SCHEDULE (DURING PEAK OZONE SEASON ONLY)

EMISSION UNIT NO.	SOURCE CLASSIFICATION CODE (SCC)	SEG. NO.	DAILY THROUGHPUT	UNITS
BL-01			1000	LBS.

DAYS/WEEK	WEEKS OF OPERATION	START TIME ON TYPICAL DAY	END TIME ON TYPICAL DAY
7	52	8AM	6PM

EMISSIONS CALCULATIONS

Air Pollutant	Emission Factor	Control Efficiency (%)	Actual Emissions (lbs./day)
VOC	0.003		0.03
NO_X	0.38		3.8
CO	0.012	99	0.12

OPERATING RATE/SCHEDULE (DURING PEAK OZONE SEASON ONLY)

EMISSION UNIT NO.	SOURCE CLASSIFICATION CODE (SCC)	SEG. NO.	DAILY THROUGHPUT	UNITS

DAYS/WEEK	WEEKS OF OPERATION	START TIME ON TYPICAL DAY	END TIME ON TYPICAL DAY

EMISSIONS CALCULATIONS

Air Pollutant	Emission Factor	Control Efficiency (%)	Actual Emissions (lbs./day)
VOC			
NO_X			
CO			

OPERATING RATE/SCHEDULE (DURING PEAK OZONE SEASON ONLY)

EMISSION UNIT NO.	SOURCE CLASSIFICATION CODE (SCC)	SEG. NO.	DAILY THROUGHPUT	UNITS

DAYS/WEEK	WEEKS OF OPERATION	START TIME ON TYPICAL DAY	END TIME ON TYPICAL DAY

EMISSIONS CALCULATIONS

Air Pollutant	Emission Factor	Control Efficiency (%)	Actual Emissions (lbs./day)
VOC			
NO_X			
CO			

MISSOURI DEPARTMENT OF NATURAL RESOURCES
AIR POLLUTION CONTROL PROGRAM

EMISSIONS INVENTORY QUESTIONNAIRE, OR EIQ
FORM 2.0S STACK/VENT INFORMATION

FACILITY NAME	FIPS COUNTY NO.	PLANT NO.	YEAR OF DATA
ASPEN PET CREMATIONS, LLC			2013

EMISSION UNIT NO.	SOURCE CLASSIFICATION CODE (SCC)	SEG. NO.	☒ Stack ☐ Vent	FOR A NON-CIRCULAR STACK: DIAMETER = (1.128A)^1/2 (A=CROSS-SECTIONAL AREA IN SQ FEET)
BL-01				

STACK/VENT NO.	STACK/VENT DESCRIPTION	% OF EMISSIONS RELEASED
ST-01	PET CREMATORY STACK	100

STACK/VENT OPERATING STATUS (CHECK ONE) ☒ Active ☐ Inactive ☐ Dismantled

HEIGHT (FT.)	DIAMETER (FT.)	TEMPERATURE (F)	VELOCITY (FT./MIN.)	FLOW RATE (CU FT./MIN.)	LIST OTHER POINTS SHARING THIS STACK/VENT
18	1.5	900	1100	2000	N/A

EMISSION UNIT NO.	SOURCE CLASSIFICATION CODE (SCC)	SEG. NO.	☐ Stack ☐ Vent	FOR A NON-CIRCULAR STACK: DIAMETER = (1.128A)^1/2 (A=CROSS-SECTIONAL AREA IN SQ FEET)

STACK/VENT NO.	STACK/VENT DESCRIPTION	% OF EMISSIONS RELEASED

STACK/VENT OPERATING STATUS (CHECK ONE) ☐ Active ☐ Inactive ☐ Dismantled

HEIGHT (FT.)	DIAMETER (FT.)	TEMPERATURE (F)	VELOCITY (FT./MIN.)	FLOW RATE (CU FT./MIN.)	LIST OTHER POINTS SHARING THIS STACK/VENT

EMISSION UNIT NO.	SOURCE CLASSIFICATION CODE (SCC)	SEG. NO.	☐ Stack ☐ Vent	FOR A NON-CIRCULAR STACK: DIAMETER = (1.128A)^1/2 (A=CROSS-SECTIONAL AREA IN SQ FEET)

STACK/VENT NO.	STACK/VENT DESCRIPTION	% OF EMISSIONS RELEASED

STACK/VENT OPERATING STATUS (CHECK ONE) ☐ Active ☐ Inactive ☐ Dismantled

HEIGHT (FT.)	DIAMETER (FT.)	TEMPERATURE (F)	VELOCITY (FT./MIN.)	FLOW RATE (CU FT./MIN.)	LIST OTHER POINTS SHARING THIS STACK/VENT

EMISSION UNIT NO.	SOURCE CLASSIFICATION CODE (SCC)	SEG. NO.	☐ Stack ☐ Vent	FOR A NON-CIRCULAR STACK: DIAMETER = (1.128A)^1/2 (A=CROSS-SECTIONAL AREA IN SQ FEET)

STACK/VENT NO.	STACK/VENT DESCRIPTION	% OF EMISSIONS RELEASED

STACK/VENT OPERATING STATUS (CHECK ONE) ☐ Active ☐ Inactive ☐ Dismantled

HEIGHT (FT.)	DIAMETER (FT.)	TEMPERATURE (F)	VELOCITY (FT./MIN.)	FLOW RATE (CU FT./MIN.)	LIST OTHER POINTS SHARING THIS STACK/VENT

EMISSION UNIT NO.	SOURCE CLASSIFICATION CODE (SCC)	SEG. NO.	☐ Stack ☐ Vent	FOR A NON-CIRCULAR STACK: DIAMETER = (1.128A)^1/2 (A=CROSS-SECTIONAL AREA IN SQ FEET)

STACK/VENT NO.	STACK/VENT DESCRIPTION	% OF EMISSIONS RELEASED

STACK/VENT OPERATING STATUS (CHECK ONE) ☐ Active ☐ Inactive ☐ Dismantled

HEIGHT (FT.)	DIAMETER (FT.)	TEMPERATURE (F)	VELOCITY (FT./MIN.)	FLOW RATE (CU FT./MIN.)	LIST OTHER POINTS SHARING THIS STACK/VENT

MISSOURI DEPARTMENT OF NATURAL RESOURCES
AIR POLLUTION CONTROL PROGRAM

EMISSIONS INVENTORY QUESTIONNAIRE, OR EIQ
FORM 2.1 FUEL COMBUSTION WORKSHEET

FACILITY NAME	FIPS COUNTY NO.	PLANT NO.	YEAR OF DATA
ASPEN PET CREMATIONS, LLC			2013

EMISSION UNIT NO.	SOURCE CLASSIFICATION CODE (SCC)	SEG. NO.
BL-01		

1. COMBUSTION EQUIPMENT INFORMATION

COAL FIRING CODE LIST	EQUIPMENT DESCRIPTION	YEAR PUT IN SERVICE	COAL FIRING CODE NO. (CODE LIST AT LEFT)	MAXIMUM DESIGN RATE (MILLION BTU/HR.)
1. TANGENTIAL				
2. OPPOSED				
3. FRONT				
4. DRY/WET BOTTOM				
OTHER (SPECIFY)	Sum of total maximum hourly design rates			

COMBUSTION EQUIPMENT USE (CHECK ONE)

- ☐ Electric power generation
- ☐ Industrial use
- ☐ Commercial/Institutional
- ☐ Space heating
- ☒ Other (specify): PET CREMATORY

COMBUSTION EQUIPMENT CATEGORY - COAL USE ONLY (CHECK ONE)

- ☐ Pulverized coal
- ☐ Pulverized coal dry bottom
- ☐ Pulverized coal wet bottom
- ☐ Cyclone
- ☐ Fluidized bed
- ☐ Spreader stoker
- ☐ Overfeed stoker
- ☐ Underfeed stoker
- ☐ Hand fired
- ☐ Other (specify):

2. FUEL INFORMATION (CHECK ONLY ONE)

LIQUID FUELS	X GASEOUS FUELS	SOLID FUELS	OTHER
☐ Ethanol	☐ Blast oven gas	☐ Anthracite Coal	☐ Other (specify):
☐ Fuel oil 1-4 (distillate)	☐ Coke oven gas	☐ Bagasse	
☐ Fuel oil 5-6 (residual)	☐ Liquid propane gas (LPG)	☐ Bark	
☐ Gasoline	☒ Natural gas	☐ Bituminous coal	
☐ Kerosene		☐ Coke	
		☐ Lignite	
		☐ Subbituminous coal	
		☐ Wood	

3. CALCULATION OF MAXIMUM HOURLY DESIGN RATE

TOTAL HEAT CONTENT (BTU/FUEL UNIT)	MAXIMUM HOURLY DESIGN RATE (FUEL UNIT/HR.)	
1050 cu.ft.	1500 cu.ft.	$= \frac{\text{Maximum Design Rate (mmbtu/hr.)} \times 1{,}000{,}000 \text{ (btu/mmbtu)}}{\text{Heat Content (btu/fuel unit)}} = \frac{1500}{1050}$ = 1.43

MO 780-1436 (12-09)

MISSOURI DEPARTMENT OF NATURAL RESOURCES
AIR POLLUTION CONTROL PROGRAM

EMISSIONS INVENTORY QUESTIONNAIRE, OR EIQ
FORM 2.2 INCINERATOR WORKSHEET

FACILITY NAME	FIPS COUNTY NO.	PLANT NO.	YEAR OF DATA
ASPEN PET CREMATIONS, LLC			2013

1. EQUIPMENT INFORMATION

EMISSION UNIT NO.	SOURCE CLASSIFICATION CODE (SCC)	SCC UNITS	SEG. NO.
BL-01			

MAXIMUM HOURLY DESIGN RATE	UNITS/HR.	MAKE / MODEL	SERIAL NUMBER
150 lbs./hr.	lbs.	B&L SYSTEMS BLP-500	

INCINERATOR USE (CHECK ONE):

☐ Government ☒ Commercial ☐ Institutional ☐ Industrial
☐ Other (specify):

EQUIPMENT TYPE (CHECK APPROPRIATE BOXES):

☒ Pathological ☐ Sewage sludge ☒ Multiple chambers ☐ Controlled air
☐ Other (specify):

NUMBER OF CHAMBERS NOT INCLUDING STACK	SECONDARY CHAMBER TEMPERATURE (F)
2	1600

2. WASTE INFORMATION AND THROUGHPUTS

PROCESS WASTE TYPES	HEAT CONTENT (BTU/UNITS)	ANNUAL THROUGHPUT	UNITS
DECEASED PETS - TYPE IV	1000/LBS.	273	TONS
	Total annual throughput =	546,000	LBS./YR.
	Total annual throughput (TONS/YR.) = (Total annual throughput (LBS./YR.)) / 2,000	273	TONS/YR.

Enter the total annual throughput (TONS/YR.) into Section 3 on Form 2.0.

MO 780-1438 (12-09)

MISSOURI DEPARTMENT OF NATURAL RESOURCES
AIR POLLUTION CONTROL PROGRAM

EMISSIONS INVENTORY QUESTIONNAIRE, OR EIQ
FORM 2.9 STACK TEST/CONTINUOUS EMISSIONS MONITOR WORKSHEET

FACILITY NAME	FIPS COUNTY NO.	PLANT NO.	YEAR OF DATA
ASPEN PET CREMATIONS, LLC			2013

EMISSION UNIT NO.	SOURCE CLASSIFICATION CODE (SCC)	SEG. NO.	STACK NO.
BL-01			ST-1

TYPE	POLLUTANT TESTED	CAS NUMBER	
☐ CEM ☒ Stack test			Note: Use a separate worksheet for each pollutant tested.

1. EMISSION SOURCE INFORMATION

EQUIPMENT MAKE/MODEL

TYPE OF CONTROL DEVICE

LIMITATIONS ON EMISSIONS, PRODUCTION OR OPERATING TIME (IF ANY)

2. STACK TEST INFORMATION

TESTING FIRM NAME

TESTING FIRM ADDRESS	CITY	STATE	ZIP CODE + 4

EPA METHOD(S) USED	TEST DATE(S)	RESULTS	COMPLIANCE
			☐ Yes ☐ No

TEST TECHNIQUE (CHECK ONE)	LATEST CALIBRATION OF TESTING EQUIPMENT
☐ Operational Rate ☐ Maximum Design Rate ☐ Both	
AGENCY OBSERVING TEST (CHECK ONE)	NAME OF OBSERVER(S)
☐ EPA ☐ DNR ☐ Other	

3. CONTINUOUS EMISSION MONITORING INFORMATION

CONCENTRATION OF POLLUTANT	UNITS	FLOW RATE OF STACK	UNITS

LATEST CALIBRATION OF MONITOR	RESULTS OF CALIBRATION
MONITOR AVERAGING PERIOD	PERCENT MONITOR DOWN TIME

4. EMISSION FACTOR CALCULATION

EMISSION RATE	UNITS LBS./HR.	Note: Documentation should include summary page information from the test data to verify the emission and production rate.
PRODUCTION RATE	UNITS/HR.	

EMISSION FACTOR = [{EMISSION RATE} / {PRODUCTION RATE}]

EMISSION FACTOR	UNITS

Enter the emission factor into the appropriate box in Section 5, Column 3 on Form 2.0.
If applicable, enter the control device type and control efficiency (%) in Section 5 on Form 2.0.

MISSOURI DEPARTMENT OF NATURAL RESOURCES
AIR POLLUTION CONTROL PROGRAM

EMISSIONS INVENTORY QUESTIONNAIRE, OR EIQ
FORM 2.T HAZARDOUS AIR POLLUTANT WORKSHEET

FACILITY NAME	FIPS COUNTY NO.	PLANT NO.	YEAR OF DATA
ASPEN PET CREMATIONS, LLC			2013
EMISSION UNIT NO.	SOURCE CLASSIFICATION CODE (SCC)		SEG. NO.
BL-01			

Use this form to report any Hazardous Air Pollutant, or HAP, which is emitted in any amount greater than the chemical reporting levels per each emission unit. The instructions for this form provide a list of the HAPs regulated under the Clean Air Act. The amount emitted (Column 4) should be reported before control equipment reductions are applied. Provide documentation (other worksheets, etc.) if the amount in Column 3 does not equal the amount in Column 4. The HAP reporting levels per emission unit are as follows: Category 1 HAPs - sum of 20 pounds per year; All other HAPs - sum of 200 pounds per year.

1. HAP CHEMICAL	2. CAS NUMBER	3. AMOUNT USED OR HANDLED (LBS./YR.)	4. UNCONTROLLED AMOUNT EMITTED (LBS./YR.)	5. UNCONTROLLED EMISSIONS REPORTED AS VOC OR PM10 (LBS./YR.)	6. UNCONTROLLED EMISSIONS REPORTED AS HAPs (LBS./YR.)	7. HAP CONTROL DEVICE(S)	8. CONTROL EFFICIENCY (%)	9. CONTROLLED EMISSIONS REPORTED AS VOC OR PM10 (LBS./YR.)	10. CONTROLLED EMISSIONS REPORTED AS HAPs (LBS./YR.)
SEE ENCLOSED									
		HAP Emission Totals =		SUM (LBS./YR.)	SUM (LBS./YR.)			SUM (LBS./YR.)	SUM (LBS./YR.)
Uncontrolled HAP Emission Factor =		Sum of uncontrolled emissions reported as HAPs (Column 6 Total)/Annual Throughput (Form 2.0)			11. HAP EMISSION FACTOR				

Enter the HAP emission factor for all chemicals that are not reported as VOCs or PM10 from Block 11 above as the HAP Emission Factor in Section 5 on Form 2.0.

MO 780-1448 (12-09)

MISSOURI DEPARTMENT OF NATURAL RESOURCES
AIR POLLUTION CONTROL PROGRAM

EMISSIONS INVENTORY QUESTIONNAIRE, OR EIQ
FORM 3.0 EMISSIONS FEE CALCULATION

FACILITY NAME	FIPS COUNTY NO.	PLANT NO.	YEAR OF DATA
ASPEN PET CREMATIONS, LLC			2013

1. EMISSION UNIT NO. — Use one row to list the emissions from one emission unit. Sum the emissions in the page total box at the bottom of the column. If more than one page is needed, use the first row of the duplicated page to list the page totals from this page. Express figures in tons per year and round to two decimal places.

SCC	AIR POLLUTANT								
	PM_{10}	SO_X	NO_X	VOC	CO	LEAD	HAPs	$PM_{2.5}$	NH_3
BL-1									
PAGE TOTALS									

Note: Fill out the lower portion of this form one time only.

2. ACTUAL EMISSIONS (Use the sum of all page totals for each pollutant for actual emission figures below.)

	PM_{10}	SO_X	NO_X	VOC	CO	LEAD	HAPs	$PM_{2.5}$	NH_3
Total									

Copy the actual emissions from section 2 to the appropriate box(es) in the Total Plant Emissions Section of *Form 1.0 General Plant Information*.

3. CHARGEABLE EMISSIONS (Maximum 4,000 Tons/Yr. cap per pollutant)

Total					NO FEES FOR CO			NO FEES FOR $PM_{2.5}$	NO FEES FOR NH_3

4. SUM OF CHARGEABLE EMISSIONS SUBJECT TO FEES

Round chargeable emissions to the nearest whole ton. The minimum emission tonnage is one ton, and the maximum is 12,000 tons per year. — Tons/Yr.

5. TOTAL ANNUAL EMISSIONS FEE

Multiply the sum of chargeable emissions as calculated in section 4 by $40 and enter this amount in section 5. The minimum fee is $40. — $

6. ANNUAL EMISSIONS FEE REMITTED TO THE CITY OF KANSAS CITY OR ST. LOUIS COUNTY LOCAL AIR AGENCY

CHECK NUMBER	CHECK DATE	AMOUNT REMITTED IN CALENDAR YEAR OF RECORD

7. ANNUAL EMISSIONS FEE REMITTED TO THE STATE (SECTION 5 MINUS SECTION 6)

CHECK NUMBER	CHECK DATE	CHECK AMOUNT
		$

8. INCLUDE A CHECK FOR THE AMOUNT IN SECTION 7, PAYABLE TO THE MISSOURI AIR POLLUTION CONTROL PROGRAM.

Mail the check for the emissions fee to the State Air Agency listed on Form 1.0.

9. SEND THE COMPLETED QUESTIONNAIRE AND ANY SUPPORTING DOCUMENTATION TO THE AGENCY LISTED AT THE BOTTOM OF *FORM 1.0 GENERAL PLANT INFORMATION*.

Facilities within local air program jurisdiction only need to include copies of *Form 1.0 General Plant Information*, *Form 3.0 Emissions Fee Calculation* and *Form 4.0 Financial Cost Estimate* with the emissions fee check.

Township and Range - Search By Latitude and Longitude.

A user account is **not** needed for the features on this web page.

Enter latitude and longitude. Find the corresponding township and section. The BLM database is searched first. If nothing is found then the National Atlas database is searched. Note that the National Atlas database has only townships, no sections.

Latitude 39.037087 Examples: 43°38'19.39"N, 43 38 19.39, 43.6387194

Longitude -94.304187 Examples: 116°14'28.86"W, 116 14 28.86, -116.2413513

View

Free. User account is not needed.

Fly To On Google Earth

If you want to see the surrounding townships, then once you have clicked the "Fly To" button, come back and click the BLM or National Atlas "View on Google Earth" button. Free. User account is not needed.

Township - BLM database

Township T49N R31W
Meridian Fifth
State Missouri
Source USFS
Calculated Values
Acres 23,178
Centroid 39.0545186, -94.3309960
Corners NW 39.0999827, -94.3848808
NE 39.0965661, -94.2731779
SE 39.0093640, -94.2773057
SW 39.0126094, -94.3887390

For illustration only. User to verify all information.
www.earthpoint.us

Section - BLM database

Section S26 T49N R31W
Meridian Fifth
State Missouri
Source USFS
Calculated Values
Acres 642
Centroid 39.0320049, -94.3040924
Corners NW 39.0394828, -94.3130062
NE 39.0389692, -94.2944611
SE 39.0244624, -94.2952107
SW 39.0249759, -94.3137523
Quarters This section has 0 quarter/quarters plotted.

For illustration only. User to verify all

iTouchMap.com
Mobile and Desktop Maps

To find the latitude and longitude of a point **Click** on the map, **Drag** the marker, or enter the...

Address: 3424 nw duncan street, blue sprngs, MO [Go]

Map Center: Get Address - Land Plat Size - Street View - Google Earth 3D - Area Photographs

Try out the Google Earth Plug-in. Google Earth gives you a 3D look of the area around the center of the map, which is usually your last click point, and includes latitude, longitude and elevation information.

Latitude and Longitude of a Point

Note: Right click on a **blue marker** to remove it.

[Clear/Reset All Markers] [Center Red Marker]

Get the Latitude and Longitude of a Point

When you click on the map, move the marker or enter an address the latitude and longitude coordinates of the point are inserted in the boxes below.

Latitude: 39.037087

Longitude: -94.304187

	Degrees	Minutes	Seconds
Latitude:	39	2	13.5126
Longitude:	-94	18	15.0726

Show Point from Latitude and Longitude

Use this if you know the latitude and longitude coordinates of a point and want to see where on the map the point is.

Use: **+** for *N* Lat or *E* Long **-** for *S* Lat or *W* Long.
Example: +40.689060 -74.044636
Note: Your entry should not have any embedded spaces.

Decimal Deg. Latitude:

Decimal Deg. Longitude:

[Show Point]

Example: **+34 40 50.12** for *34N 40' 50.12"*

	Degrees	Minutes	Seconds
Latitude:			
Longitude:			

[Show Point]

© iTouchMap.com 2007-2012

Latitude and Longitude

Decimal Degrees

Latitude (Degrees): 39.037087 Longitude (Degrees): -94.304187

Degrees, Minutes, Seconds

Latitude Degrees: 39 Minutes: 2 Seconds: 13.513

Longitude Degrees: -94 Minutes: 18 Seconds: 15.073

Standard UTM

UTM (meters)

Easting: 387125.1 Northing: 4321701.4 Zone: 15 South of Equator:

NATO UTM

NATO UTM (meters)

Because digraphs repeat every 2000 km in the north-south direction, and every three zones east-west, a full zone description is necessary for an unambiguous conversion.

Long Zone: 15 Lat Zone: und Digraph: UD Easting: 87125.1 Northing: 21701.4

CALCULATIONS FOR PRODUCTS OF COMBUSTION
AND RESIDENCE TIME FOR 150 LB/hr
TYPE IV WASTE. B&L ANIMAL CREMATORY

NATURAL GAS

A. BASIS: 1 LB WASTE

1. $\frac{\text{1 lb waste X 1000 Btu/lb waste X 15 lbs air}}{\text{10,000 Btu}}$ = 1.5 lbs air

2. $\frac{\text{1 lb waste X 0.10 lb combustible}}{\text{1 lb waste}}$ = 0.10 lbs of combustibles

3. $\frac{\text{1 lb waste X 0.85 lb H20 X 1.6*}}{\text{1 lb waste}}$ = 1.36 lbs of water

4. $\frac{\text{6,500 Btu aux fuel** X 10.0 cu ft air/cu ft fuel}}{\text{1,050 Btu/cu ft fuel X 13.35 cu ft air/lb air @ 70f}}$ = 4.64 lbs of air for aux fuel

5. $\frac{\text{6,500 Btu aux fuel X 0.044 lb fuel/cu ft fuel}}{\text{1,050 Btu/cu ft fuel}}$ = 0.27 lb of aux fuel

6. Sum = PRODUCTS OF COMBUSTION (POC) = 7.86 lbs POC per lb waste @ 70f

B. RESIDENCE TIME @ 1600 F

1. $\frac{\text{7.86 lbs POC/lbs waste X 51.89 cu ft / lb POC @ 1600f X 150 lbs waste / hr}}{\text{3600 sec/hr}}$

= 16.99 cu ft / sec @ 1600 f = 17.00 cu ft for 1 second residence time

RESIDENCE TIME @ 1800 F

2. $\frac{\text{7.86 lbs POC/lbs waste X 56.93 cu ft /lb POC @ 1800f X 150 lbs waste / hr}}{\text{3600 sec/hr}}$

= 18.64 cu ft / sec @ 1800f = 19.00 cu ft for 1 second residence time

* Correction multiplier for dry air and water vapor
** Fuel is natural gas

Referances: Incinerator institute of America.
North American Combustion Handbook
Eclipse Combustion Engineering guide

C. THERMOCOUPLE PLACEMENT.

Secondary chamber operating temperature at > or = to 1600f = 17.00 cu ft from flame tip.
1800f = 19.00 cu ft from flame tip.

Cremation
Systems, Inc.
WORLDWIDE SALES AND SERVICE
7205 - 114th Avenue North • Largo, Florida 33773
1-800-622-5411 • 727-541-4666 • Facsimile 727-547-0669
e-mail: blcremsys@aol.com • www.blcremationsystems.com

PROCESS DESCRIPTION

This project consists of the construction of one new cremation retort. This crematorium will consist of one B & L Systems Model BLP 500/150 Animal Cremator. The cremation unit will be fired on natural gas.

Deceased animal remains are manually placed into the primary chamber of the cremator. The door of the cremator is then closed. After a preheat of the afterburning chambers by the auxiliary burner, initial and supplementary combustion is provided by natural gas fired burner located in the primary chamber of the cremator. Once material combustion is initiated, the rate of the combustion is controlled by limiting both the combustion air and fuel supplied to the primary chamber through the primary burner. This process generates a highly combustible gas mixture that flows into a secondary chamber where more air is admitted to insure further oxidation of the gases. The auxiliary burner is installed in the secondary chamber of the cremator to facilitate complete combustion of all gaseous materials entering this chamber.

Once the cremation process is complete, the remains are removed from the primary chamber of the cremator. These remains are placed in urns and returned to the family for interment of disposal.

Cremation Systems, Inc.
7205 - 114th Avenue North • Largo, Florida 33773
1-800-622-5411 • 727-541-4666 • Facsimile 727-547-0669
e-mail: blcremsys@aol.com • www.blcremationsystems.com

PROCESS FLOW DIAGRAM

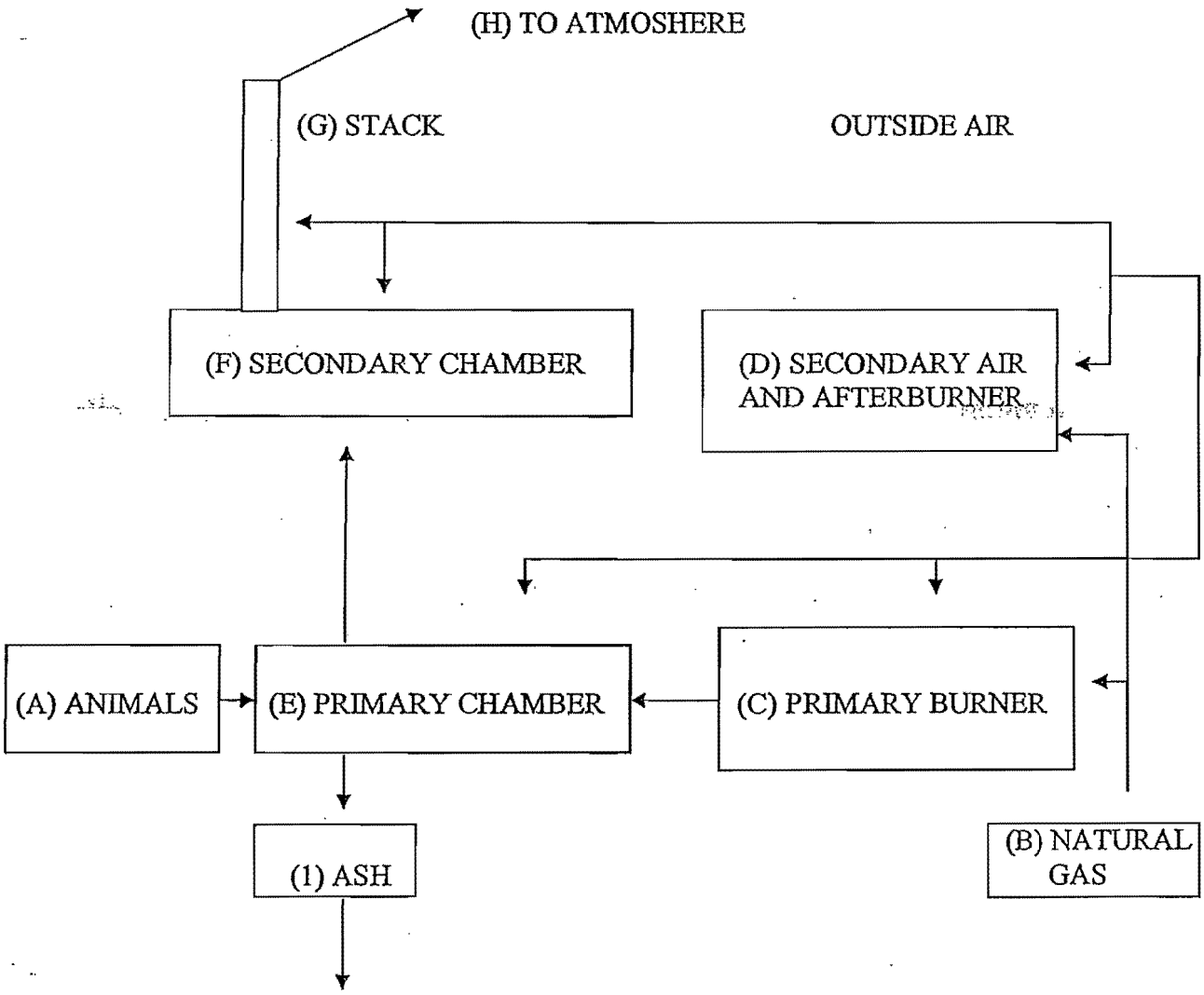

Cremation Systems, Inc.
WORLDWIDE SALES AND SERVICE
7205 - 114th Avenue North • Largo, Florida 33773
1-800-622-5411 • 727-541-4666 • Facsimile 727-547-0669
e-mail: blcremsys@aol.com • www.blcremationsystems.com

TEMPERATURE CONTROL SEQUENCE

A type "K" thermocouple is placed 19 ft. down stream of the flame tip to measure temperature, the signal is sent to the *main control panel* where it is received by a FUJI PYZ series temperature controller with digital readout and a DR4200 *temperature recorder*. The FUJI PYZ series temperature controller controls the temperature via a *motorized butterfly valve* located on the *afterburner inlet gas assembly*. Gas demand is controlled by temperature to maintain a steady temperature. The *ignition/cremation burner* is interlocked to the *afterburning temperature* by the FUJI PYZ series temperature controller set point. Combustion cannot start until *temperature set point* is reached. Alarm contacts in the FUJI PYZ series temperature controller are utilized for over (high) temperature conditions. 100° F over set point the *afterburner* will be in maximum low fire and the *ignition/cremation burner* will shut off. The *butterfly valve* located on the *secondary air inlet* is controlled by a separate temperature out put to add air to cool the system. At *set point* the unit will return to normal operation. An optimonitor smoke detector is placed on the stack and set at 10% opacity if emissions occur the alarm will sound; a visual *red warning lamp* located on the *control panel* will illuminate and the *primary burners* will shut off. The *excess air butterfly valve* will open to add air to the *secondary chamber* to oxidize the emissions. After a five (5) minute period the unit will revert to normal operation.

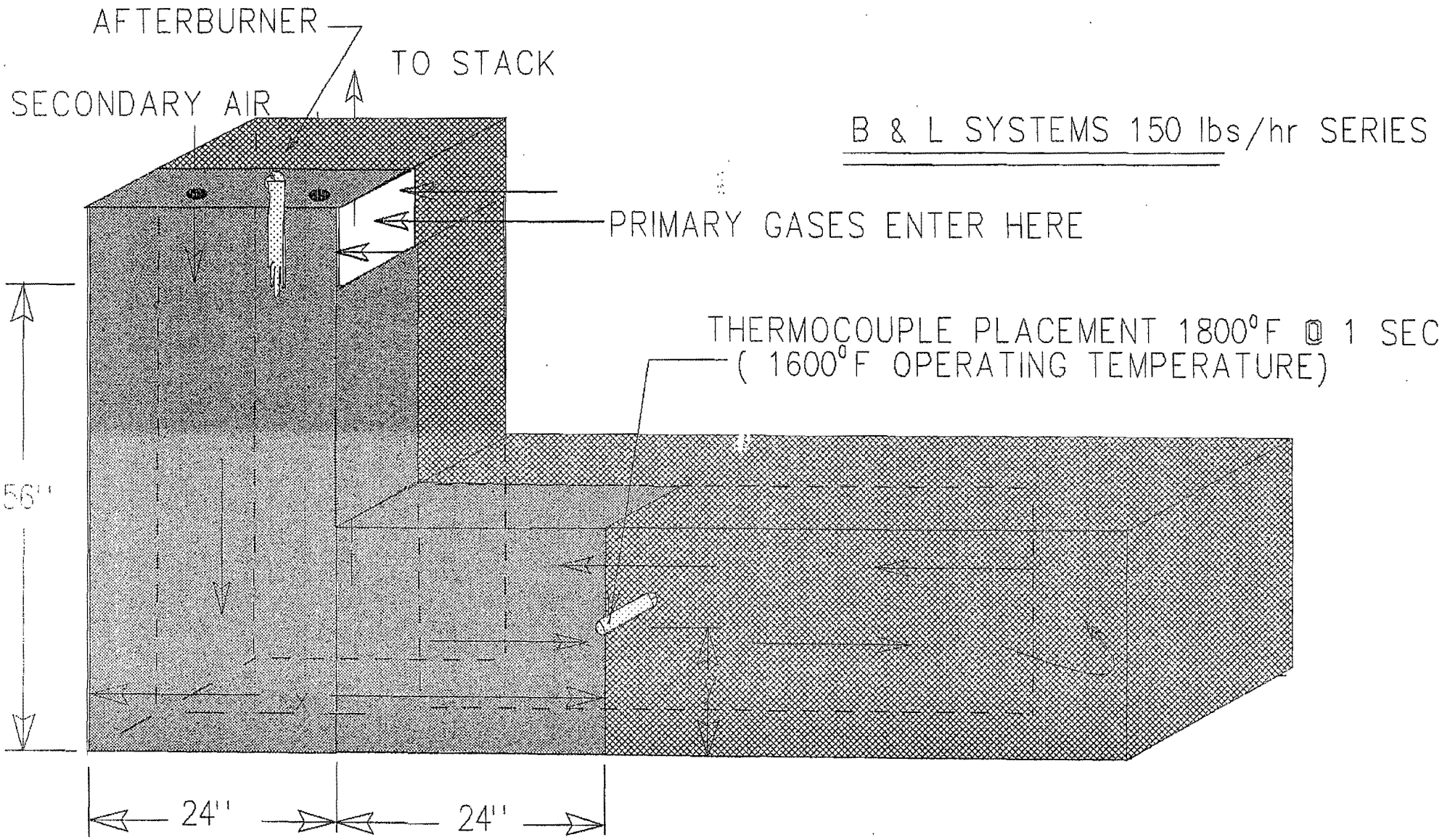

x=48'' (outside dim)

y=11.5''(outside dim)

CHAMBER SIZE VERTICAL 18''x24''x56'' = 14 FT^3

HORIZONTAL 18''x20''x24'' = 05 FT^3

19 FT^3

Cremation Systems, Inc.
WORLDWIDE SALES AND SERVICE
7205 - 114th Avenue North • Largo, Florida 33773
1-800-622-5411 • 727-541-4666 • Facsimile 727-547-0669
e-mail: blcremsys@aol.com • www.blcremationsystems.com

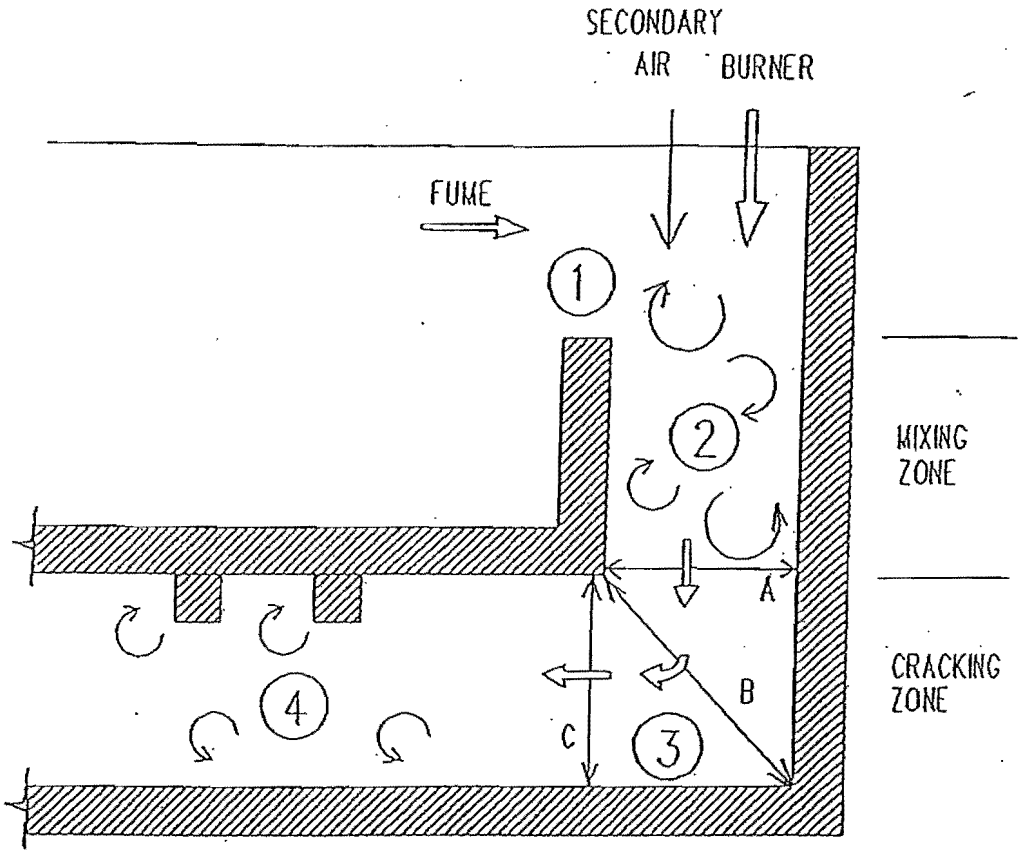

1. At the back of primary chamber, waste fume, air and burner flame all meet with different viscosities, volumes, velocities and flow directions which causes turbulence in the mixing zone of the secondary chamber.

2. Turbulence continues in the mixing zone as flows are traversing the flame tip.

3. Changing velocity at flame front zone and cornering cause additional turbulence at the base of the unit. $V_A > V_B < V_C$.

4. Uneven cross sectional area due to arches in the ceiling to support the primary chamber floor and additional changes in directional flow causes further turbulence downstream in the secondary chamber.

A	B	C	D	E	F	G	H	I	J	K	L	M	N
40	77	30	20	20	24	20	24	18	126	72	66	20	96

Burn Rate: 150 lbs/hr

Model Number: BLP - 500/150

B & L Cremation Systems
Pet
Cremator
Specifications

1-800-622-5411

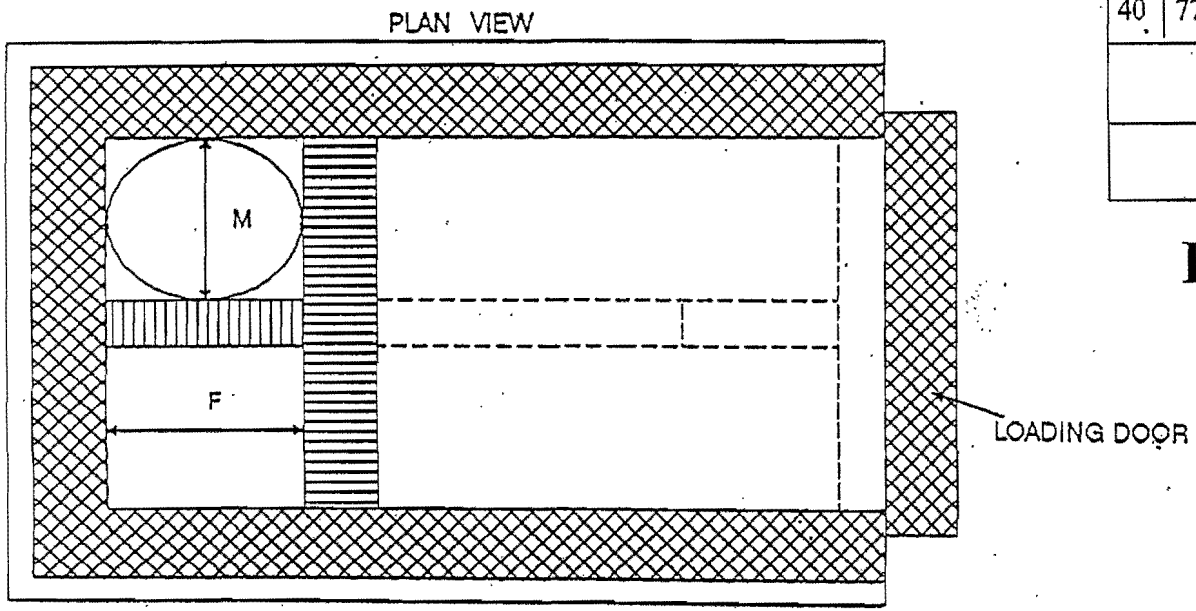

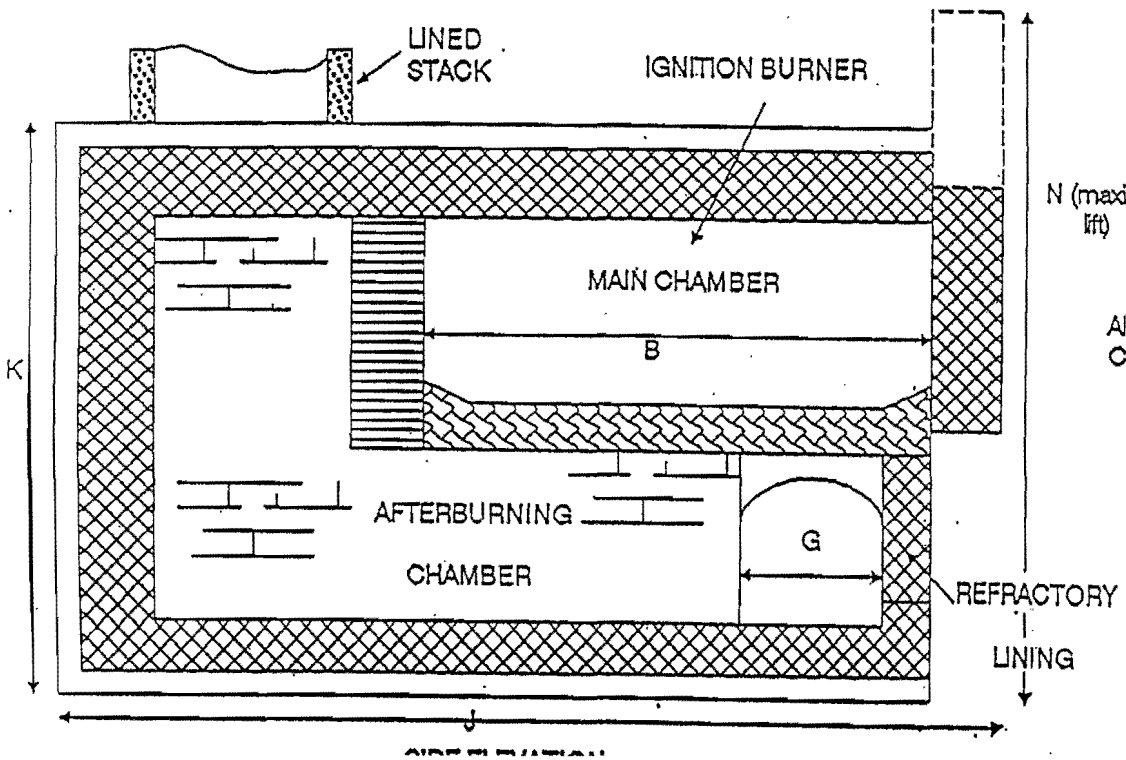

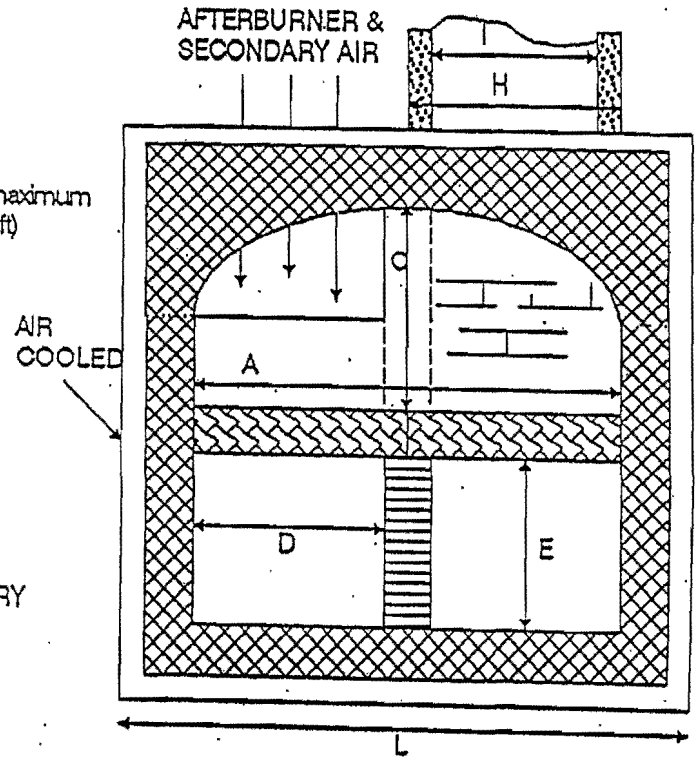

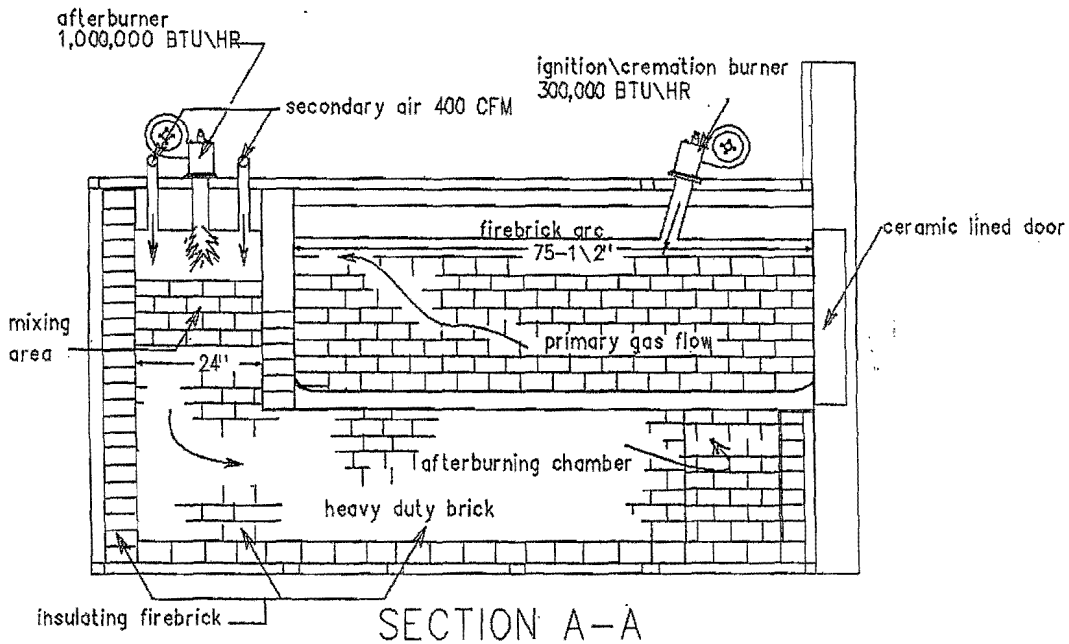

SECTION A-A

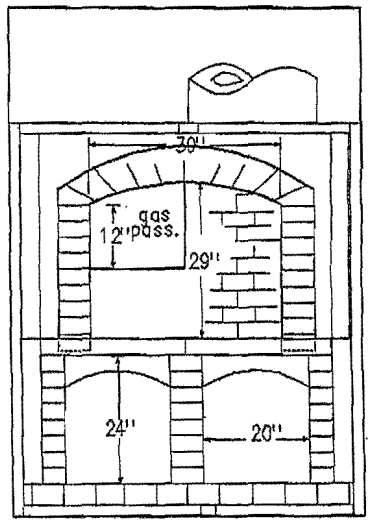

SECTION B-B

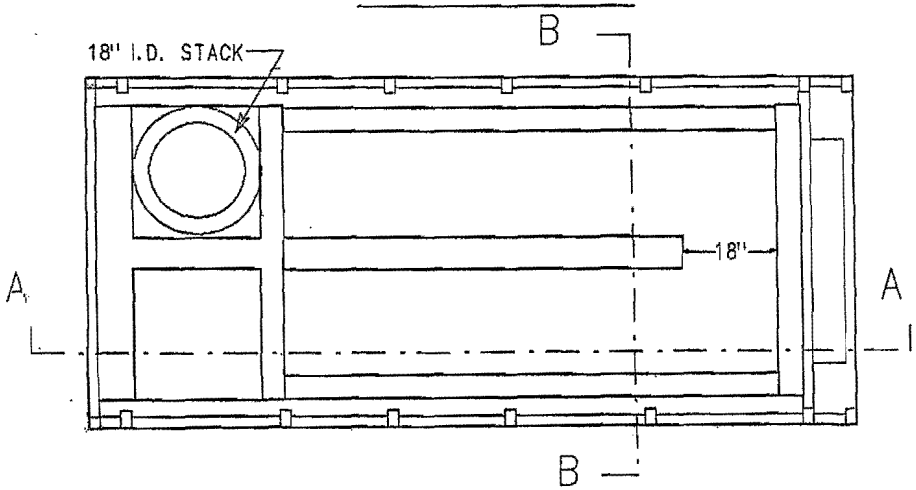

PLAN VIEW THRU CHAMBERS

BLP 500\150 ANIMAL CREMATOR

Instruction Manual

No. 205, 11/95

Eclipse Velocity Burners

ThermJet Series (version 1.0)

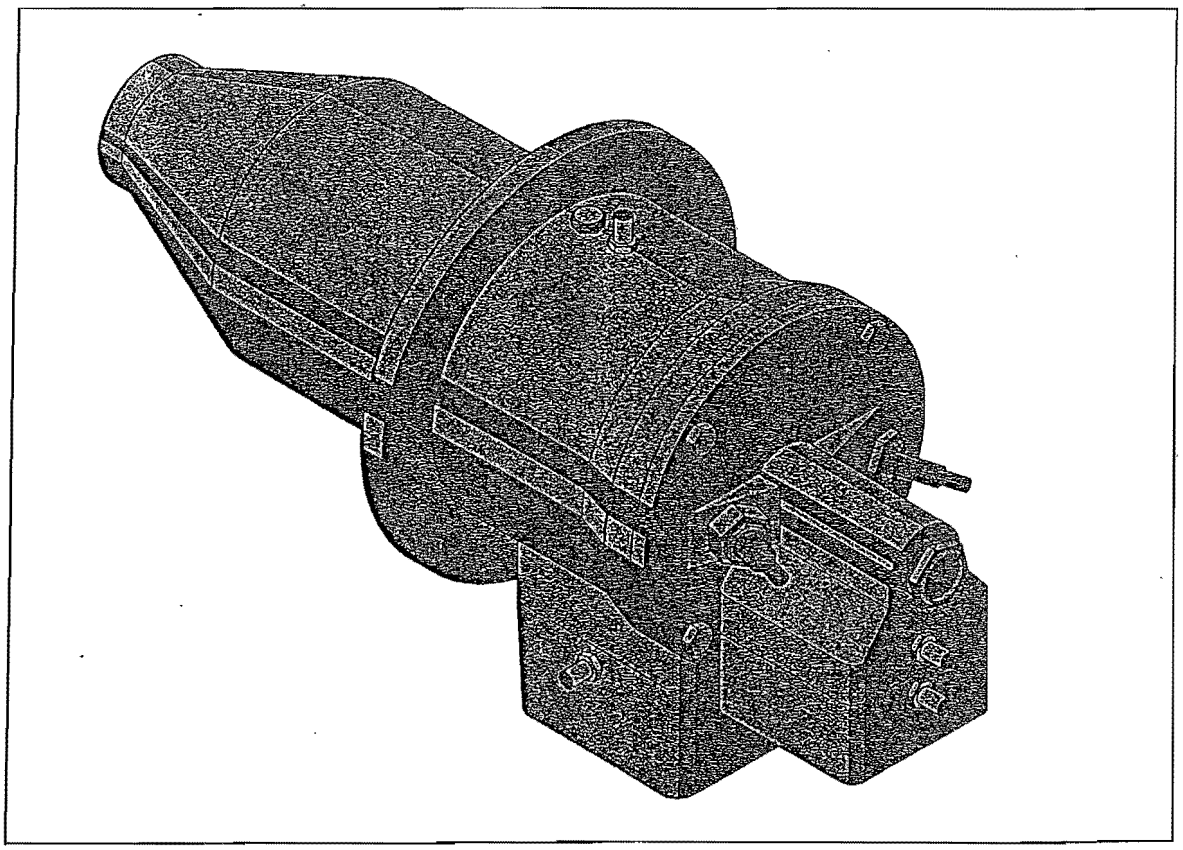

Eclipse Combustion

Specifications

3

INTRODUCTION

This section gives a detailed overview of the burner specifications. It also lists several options that are available for the ThermJet.

Figure 3.1 **The ThermJet burner**

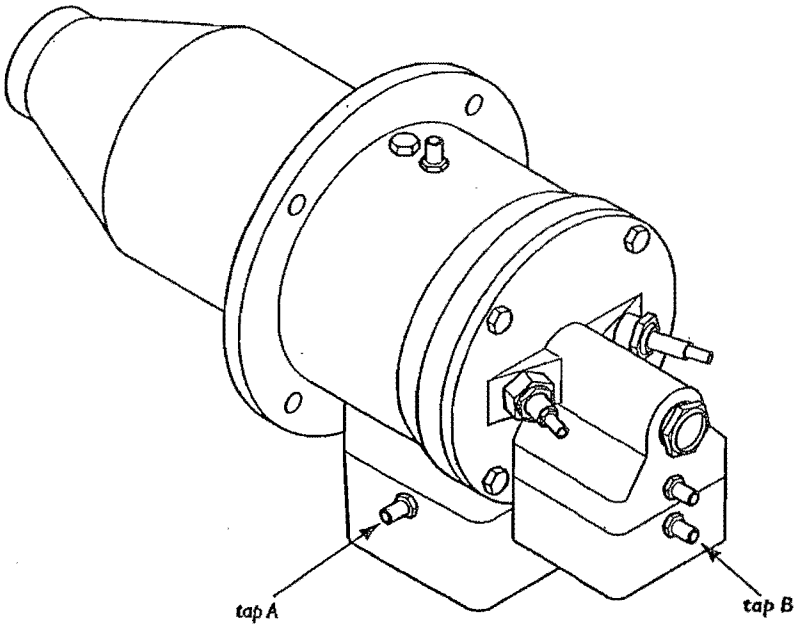

Table 3.1 **Options**

PARAMETER	OPTIONS	
Fuel	• natural gas • propane • butane.	*For any other mixed gas, contact Eclipse for orifice sizing.*
Flame detection	• U.V. scanner • flame rod, for use with alloy or silicon carbide firing tubes only.	
Ignition	• direct spark ignition (6 kV AC).	
Combustor	• alloy firing tube • silicon carbide firing tube • refractory block.	

SPECIFICATIONS

Main specifications

Table 3.2 **ThermJet performance data**

PARAMETER	BURNER TYPE (VELOCITY)		BURNER SIZE			
			50	75	100	150
High fire input (Btu/hr)	Medium & High velocity		500,000	750,000	1,000,000	1,500,000
Low firing rate, on-ratio (Btu/hr)	Medium & High velocity		50,000	75,000	100,000	150,000
Low firing rate, fixed air (Btu/hr)	Medium & High velocity		10,000	15,000	20,000	30,000
Static air pressure ("w.c.) • 15% excess air, at maximum input with standard orifice plate installed. measured at tap A (See Figure 3.1)	High velocity		12.0	16.0	14.5	18.5
	Medium velocity		7.5	8.0	7.5	9.5
Static gas pressure ("w.c.) • at maximum input with standard orifice plate installed. measured at tap B (See Figure 3.1)	High velocity		11.0	15.5	16.0	16.5
	Medium velocity		6.0	6.5	7.5	8.0
Flame length (In) (from end of firing tube)	High velocity	Nat. gas	25	30.4	33	38
		Propane	33	34	34	42
		Butane	30	30	35	43
	Medium velocity	Nat. gas	28	28	38	43
		Propane	36	38	37	42
		Butane	39	30	42	40
Maximum flame velocity (ft/s) • 15% excess air, at maximum input	High velocity		500	500	500	500
	Medium velocity		250	250	250	250

- all information is given for general sizing purposes only
- refer to data sheet for burner specific information
- all inputs based on gross calorific values

Performance graphs

The graphs that follow give you an approximate picture of the performance. Should you want more exact information, contact Eclipse Combustion.

Figure 3.2 **NO_x emissions**

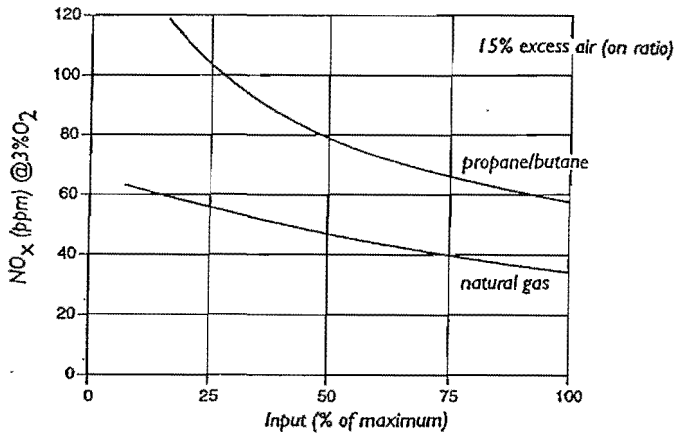

The emissions from the burner are influenced by:

- the fuel type
- the combustion air temperature
- the firing rate
- the chamber conditions
- the percent of excess air.

For estimates of other emissions, contact Eclipse Combustion.

Figure 3.3 **Operational zone**

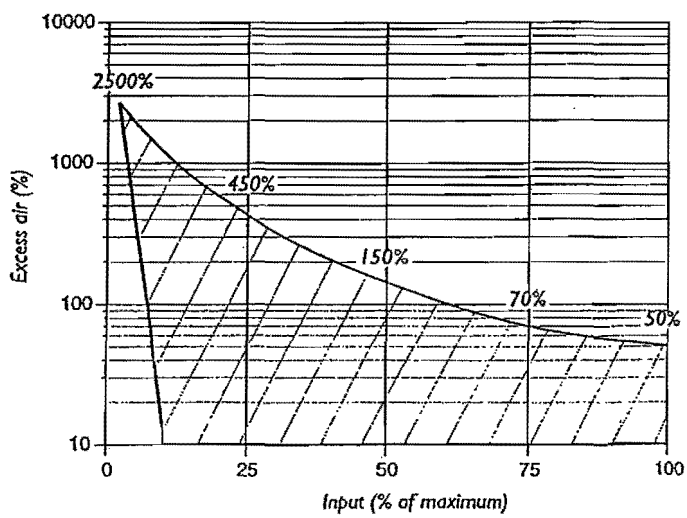

OPTOMONITOR

VISIBLE EMISSIONS ALARM (VEA)

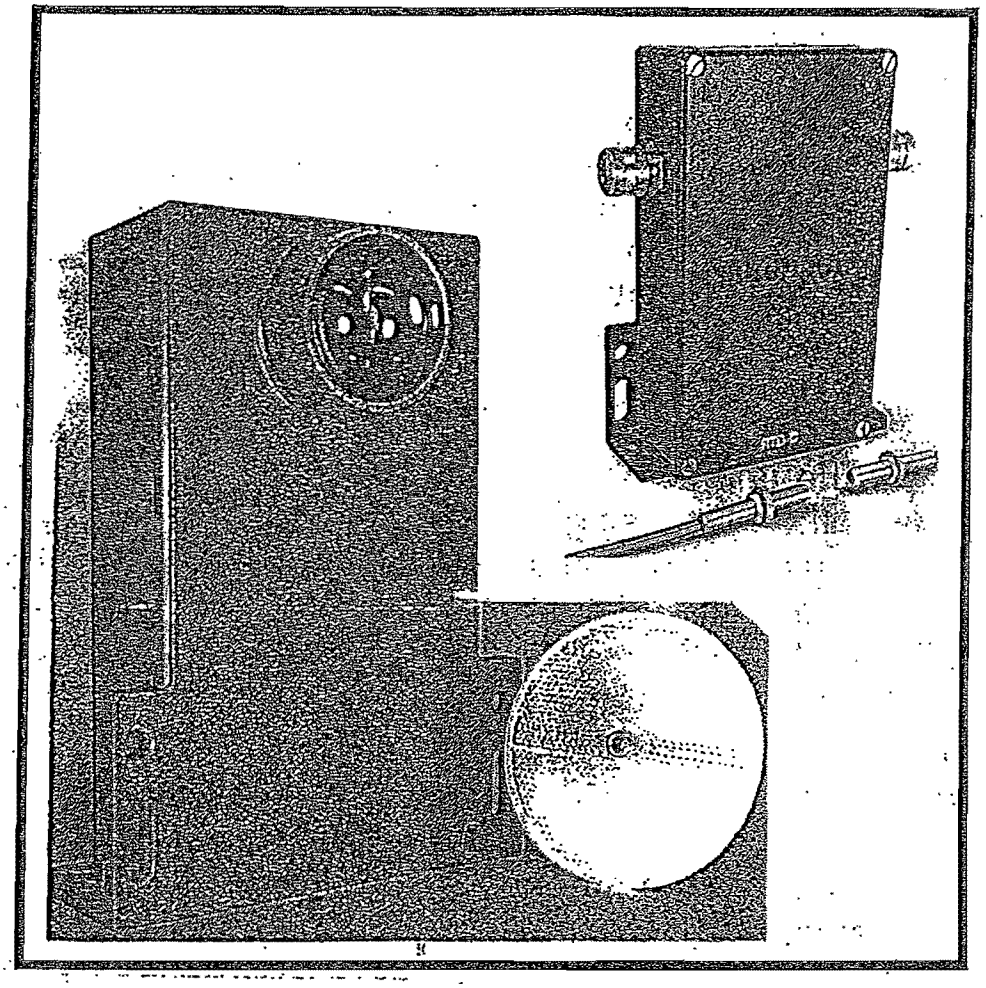

APPLICATION: Alarm and control for **Opacity** used on small and large sources for warning operators and shutting down systems based on opacity, haze or clarity.

- Proven Rugged Design
- Unaffected by Ambient Light
- Spans up to 6 Feet
- Visible LED Light Source
- Dual Beam or Single Beam
- Adjustable Delay up to 3 min.
- Easy to Install & Support
- External Adjustment

GENERAL PURPOSE OPACITY ALARMS

OPTOMONITOR

APPLICATION: These units are specifically designed to provide an operator with a reliable alarm system when Opacity or Smoke has exceeded a predefined limit. The alarm limit is easily set by using an opacity filter. The pulsed visible LED is unaffected by ambient light which makes for easy to install and calibrate.

FEATURES: The unit comes in either a single beam and dual beam design and an almost permanent LED light source. The electronics are housed in a rugged die-cast housing and powered by either 120 VAC or 230 VAC.

These designs meet all common installation requirements.

SPECIFICATIONS:

LIGHT SOURCE: Pulsed Visible LED.
SPECTRAL RESPONSE: Between 400nm & 500nm.
ANGLE OF VIEW: Less the 4 degrees from axis.
AMBIENT LIGHT: No measurable effect.

RANGE: 0 TO 100% Opacity.
ACCURACY: +/- 3% of full scale.
ALARMS: DPDT 5.0 A @ 120 VAC, 100% adj.
LED indicator for alarm setting.
OTHER OUTPUTS: ON-OFF operation (no time delay).
OFF time delay (reverse of normal).
Adjustable One-shot.

POWER: 100-130 Volts AC, 50/60 Hz, 10 VA.
TEMPERATURE: Ambient: -20 to +150 degrees F.
Storage: +20 to +90 degrees F.
ENCLOSURES: Meet NEMA 3,4,5,12.
PHYSICAL: ELECTRONICS 8.0" x 5.75" x 3.31" (HWD).
VEA-S SINGLE BEAM - 3/8"-24 inch. Straight Thread.
VEA-D DUAL BEAM SENSOR - 3" Diameter.

RESPONSE TIME: Selectable & Adjustable up to 3 minutes.

OPTOMONITOR, Inc.
270 Polaris Avenue
Mountain View, CA 94043
Phone: 415/967-8992
Fax: 415/967-0286

PLACE
STAMP
HERE

Bulletin 610
3/93
formerly K-55

ECLIPSE TURBO BLOWERS

SERIES "SMJ"

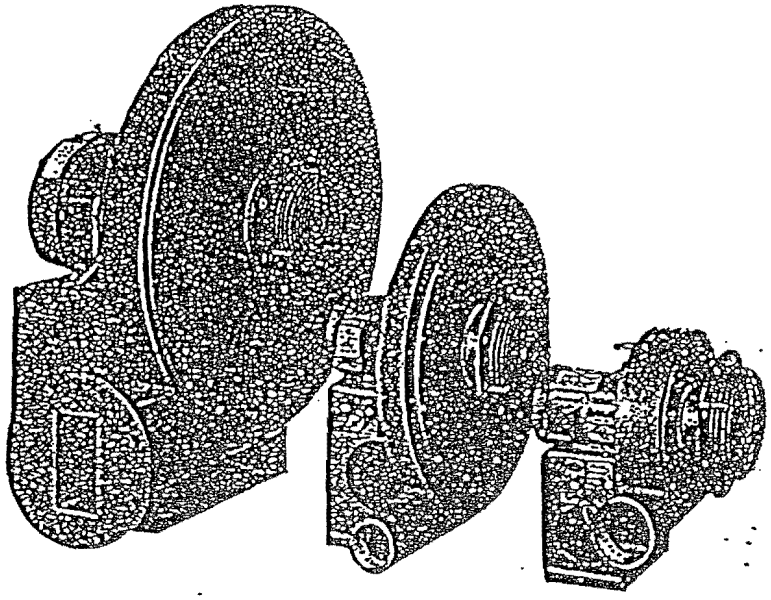

- High efficiency
- Heavy gauge steel base and housing
- Aluminum impellers balanced statically and dynamically
- Matching air filters available
- Changeable outlet positions

Eclipse "SMJ" Blowers are centrifugal blowers that provide low pressure air for industrial combustion systems. They are also used for cooling, conveying, drying, liquid agitation, smoke abatement, vacuum cleaning, fume and dust exhausting, and other plications where air temperatures are under 220°F.

All "SMJ" Blowers are constructed of continuous welded, heavy gauge steel. The impellers are made of lightweight, high strength, riveted aluminum. Outlets on 3" and 4" models are threaded, while all others are flanged for a standard 125# ANSI companion flange. Discharge ports are sized to keep pressure losses within reasonable limits.

Blower inlet flanges are equipped with a grill that complies with OSHA regulations. If desired, the grill may be removed and the inlet bolted to a standard ANSI companion flange. Eclipse-supplied motors are standard shaft and starting torque, ball bearing, 3600 rpm units. On any blower requiring 3/4 HP or more, Eclipse recommends that polyphase motors be used.

There are four possible outlet positions. Any existing position is easily changed by removing the housing from the blower base and remounting it in the desired position. Positions 1 through 3 can be specified for any blower. Position 4, however, requires factory approval before ordering. Position 1 is the standard assembly (bottom, horizontal) unless otherwise specified.

"SMJ" Blowers can be supplied with counterclockwise (CCW) or clockwise (CW) rotation as viewed from the motor side. CCW rotation is furnished standard unless otherwise specified.

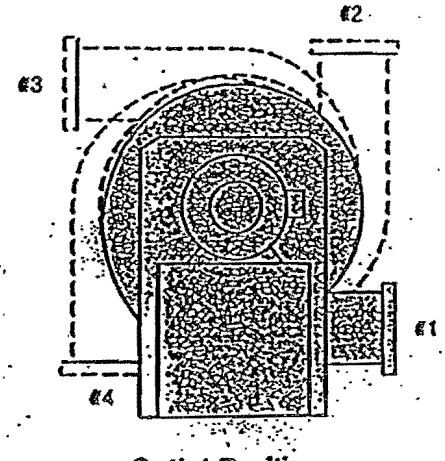

Outlet Positions

FUJI ELECTRIC

PX SERIES

PID Autotune Controllers Featuring Fuzzy Logic

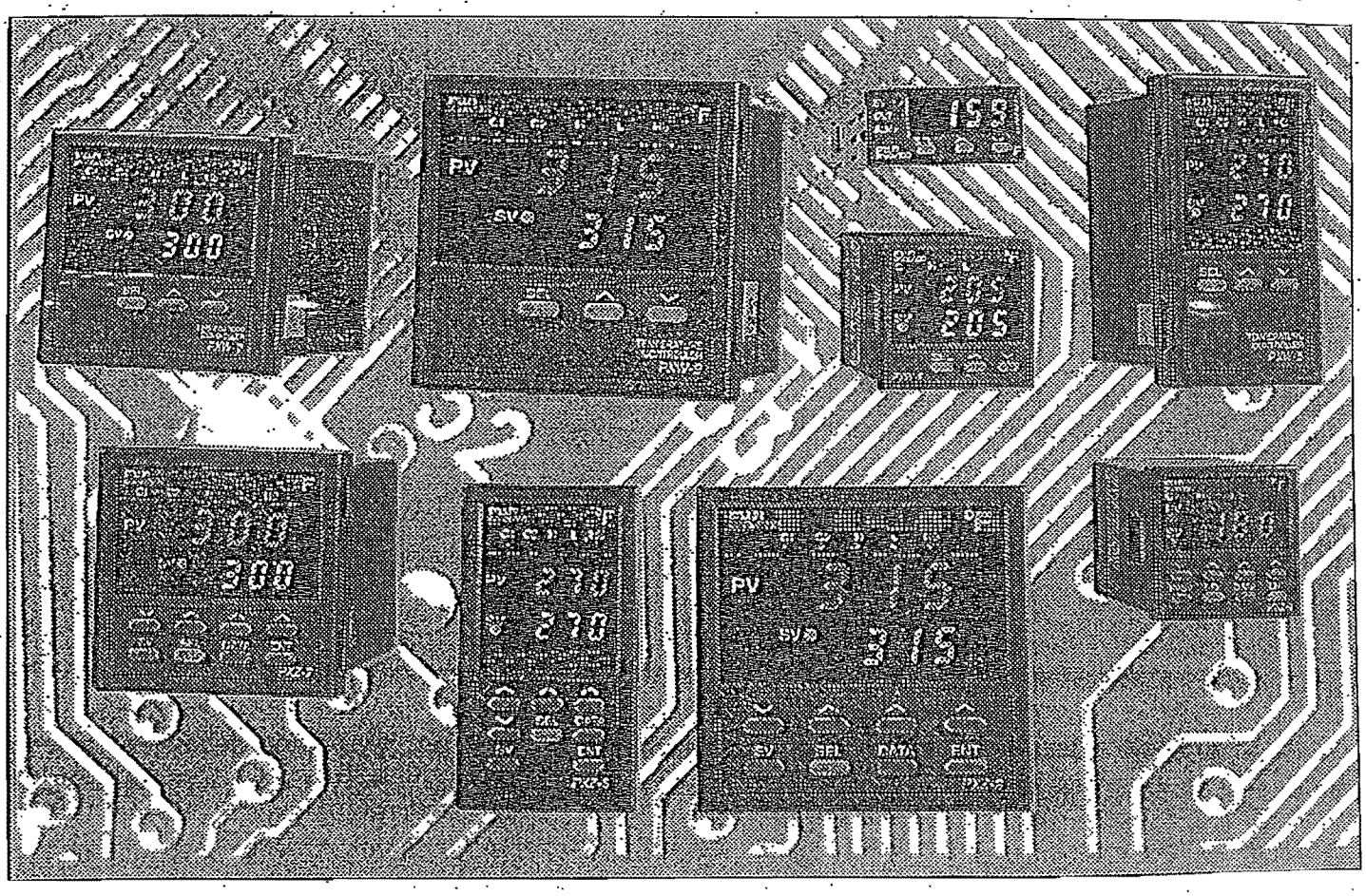

Operation Manual

MODEL CONFIGURATION

1	2	3	4		5	6	7	8		9	10		11
P	X	W / Z	4 / 5 / 7 / 9	-				1	-		V	-	

Front panel size	Code
48 x 48 (1/16DIN)	4
48 X 96 (1/8 DIN)	5
72 x 72 (72mm)	7
96 x 96 (1/4 DIN)	9

Kinds of input	Code
Thermocouple (°C)	T
Thermocouple (°F)	R
RTD/Pt100 (°C)	N
RTD/Pt100 (°F)	S
4-20mA DC, 1-5V DC	B
0-20mA DC, 0-5V DC	A

Control output 1	Code
Relay contact (reverse action)	A
Relay contact (direct action)	B
SSR driver (reverse action)	C
SSR driver (direct action)	D
4 to 20mA DC (reverse action)	E
4 to 20mA DC (direct action)	F

Control output 2*	Code
None	Y
Relay contact (reverse action)	A
Relay contact (direct action)	B
SSR driver (reverse action)	C
SSR driver (direct action)	D
4 to 20mA DC (reverse action)	E
4 to 20mA DC (direct action)	F

*not available on 48 x 48mm type

Additional function	Code
Heater break alarm*	2
Process alarm & Heater break alarm*	3
None	4
Process alarm	5

*not available on 48 x 48mm type

Power Supply Option	Code
24V AC/DC Supply	D

FEATURES:

- 1/4 DIN, 1/8 DIN, 72mm, 1/16 DIN and 1/32 DIN sizes available
- Choose between 3-button or 8-button operation
- Fuzzy logic control with PID Autotune
- Universal input-T/C, RTD, current, and voltage
- 24V DC/AC supply option available
- 8 segment ramp/soak programming
- Advanced security options to prevent unauthorized changes in parameters
- NEMA 4X faceplate

GENERAL SPECIFICATIONS

Rated voltage	85-264V AC or 24 AC/DC
Power consumption	10VA or less (100V AC, without option) 15VA or less (220V AC, without option)
Insulation resistance	50M Ω or more (500V DC)
Withstand voltage	Power source-Earth: 1500V AC, 1 min Power source-Other: 1500V AC, 1 min Earth-relay output: 1500V AC, 1 min Earth-Alarm output: 1500V AC, 1 min Other: 500V AC, 1 min
Input impedance	Thermocouple: 1M Ω or more Voltage: 450K Ω or more Current: 250 Ω (external resistor)
Allowable signal source resistance	Thermocouple: 100 Ω or more Voltage: 1K Ω or more
Allowable wiring resistance	RTD: 10 Ω or less per wire
Reference junction compensation accuracy	± 1 °C (at 23°C)
Process variable offset	(PV shift) ±10% FS
Set variable offset	± 50% FS
Input filter	0-120.0 sec, setting in 0.1 sec steps (primary lagging filter)
Noise reduction ratio	Normal mode noise (50/60Hz): 50dB or more Common mode noise (50/60Hz): 140dB or more

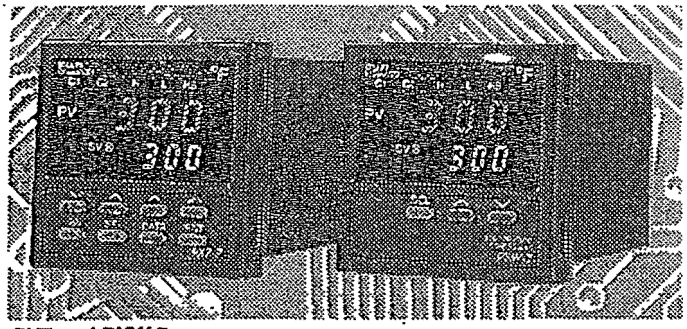

PXZ and PXW 7

POWER FAILURE PROCESSING

Memory protection:	Non-volatile memory hold After the recovery of power, control is started at the value before power failure

SELF-CHECK

Method:	Watchdog timer monitors program error.

OPERATION AND STORAGE CONDITIONS

Operating temperature	-10 to 50°C
Operating humidity	90% RH or less (non-condensing)
Storage temperature	-20 to 60°C

CONTROL FUNCTION
(STANDARD TYPE)

Control action	PID control with auto-tuning Fuzzy control with auto-tuning
Proportional band (P)	0-999.9%, setting in 0.1% steps
Integral time (I)	0-3200 sec, setting in 1 sec steps
Differential time (D)	0-999.9 sec, setting in 1 sec steps
P,I,D= 2-Pt. Position action when P,I,D=0 Proportional action when I,D=0	
Proportional cycle	1-150 sec, setting in 1 sec steps, relay contact output, SSR/SSC drive output only
Hysteresis width	0-50%, setting in 1% steps, 2-position action only
Anti-reset wind up	0-100% FS, setting in 1% steps, auto-setting with auto-tuning
Input sampling cycle	0.5 sec
Control cycle	0.5 sec

CONTROL FUNCTION
(DUAL OUTPUT TYPE) (HEATING/COOLING TYPE)

Heating Proportional band	P x 1/2 (P= 0-999.9%)
Cooling Proportional band	Heating proportional band x cooling proportional band coefficient Cooling proportional band coefficient= 0-99.9 0:2- position action
Integral time	0-3200 sec for heating and cooling
Differential time	0-999.9 sec for heating and cooling
P,I,D= 0:2- position action (without dead band) for heating and cooling I,D= 0:Proportional action	
Proportional cycle	1-150 sec, relay contact output, SSR/SSC drive output only
Hysteresis width	2-position action for heating and cooling: 0.5% FS 2-position action for cooling: 0.5% FS
Anti-reset wind-up	0-100% FS, setting in 1% steps, auto setting with auto-tuning
Overlap/dead band	±50% of heating proportional band
Input sampling cycle	0.5 sec
Control cycle	0.5 sec

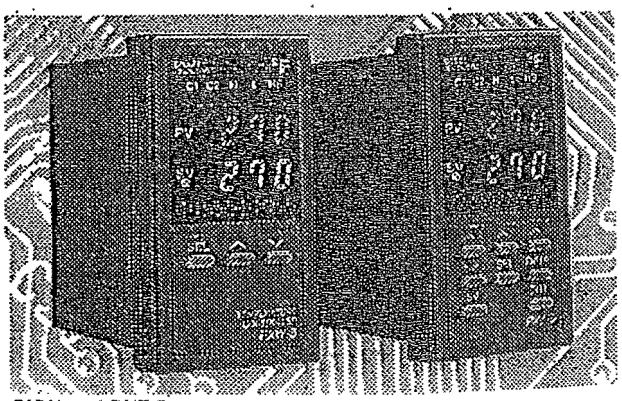

PXW and PXZ 5

EMISSIONS TESTING
of the
FOSTER'S PET CREMATION SERVICE
B & L SYSTEMS, INC. BLP 500/150
ANIMAL CREMATORY INCINERATOR
Spring Hill, Florida

March 9, 2004

FDEP Permit No.: 1010377-002-AO
EU No. 003
SES Reference No. 04S61

Conducted by:

SOUTHERN ENVIRONMENTAL SCIENCES, INC.
1204 North Wheeler Street
Plant City, Florida 33563
Phone (813) 752-5014, Fax (813) 752-2475

Project Participants

Mark S. Gierke
Dale A. Wingler
Travis B. Nelson

EMISSIONS TESTING
of the
FOSTER'S PET CREMATION SERVICE
B & L SYSTEMS, INC. BLP 500/150
ANIMAL CREMATORY INCINERATOR
Spring Hill, Florida

March 9, 2004

TABLE OF CONTENTS

	Page
1.0 INTRODUCTION	1
2.0 SUMMARY OF RESULTS	1
3.0 PROCESS DESCRIPTION	4
4.0 SAMPLING PROCEDURES	4
4.1 Methods	4
4.2 Sampling Locations	5
4.3 Sampling Trains	5
4.4 Sample Collection	8
4.5 Sample Recovery	10
5.0 ANALYTICAL PROCEDURE	11
5.1 Pretest Preparation	11
5.2 Analysis	11
APPENDIX	12

Project Participants
Certification
Visible Emissions Evaluation
Process Operational Data
Laboratory Data
Temperature Recording Chart
Field Data Sheets
CO Analyzer Strip Chart
Calibration Data
Calculations and Symbols

1.0 INTRODUCTION

Southern Environmental Sciences, Inc. conducted emissions testing of the Foster's Pet Cremation Service animal crematory on March 9, 2004. This facility is located at 15204 County Line Road, Spring Hill, Florida. Testing was conducted for particulates, carbon monoxide and visible emissions. Oxygen (O_2) concentrations were measured to correct emission rates to 7% O_2. Testing was performed to determine if the plant was operating in compliance with requirements of the Florida Department of Environmental Protection (FDEP).

2.0 SUMMARY OF RESULTS

The facility was found to be in compliance with all applicable emission limiting standards. Results of the particulate and carbon monoxide testing are summarized in Table 1. Particulate emissions from this source are limited to a maximum allowable concentration of 0.080 grains per dry standard cubic foot (corrected to 7% O_2), and 0.30 pounds per hour. The average measured particulate concentration was 0.009 grains per dry standard cubic foot (corrected to 7% O_2), and 0.031 pounds per hour, well within the limit. The maximum allowable carbon monoxide emissions concentration from this source is 100 parts per million, dry basis (corrected to 7% O_2), and 0.17 pounds per hour. The average measured carbon monoxide emission concentration was 4.3 parts per million, dry basis (corrected to 7% O_2), and 0.01 pounds per hour, well within the allowable limit.

A visible emissions evaluation was performed over a one hour period. The average

TABLE 1. EMISSIONS TEST SUMMARY

Company: FOSTER'S PET CREMATION SERVICE
Source: Animal Crematory Incinerator

	Run 1	Run 2	Run 3
Date of Run	3/9/04	3/9/04	3/9/04
Process Rate (lbs/hr)	124	124	124
Start Time (24-hr. clock)	1135	1302	1425
End Time (24-hr. clock)	1238	1403	1526
Vol. Dry Gas Sampled Meter Cond. (DCF)	35.293	36.308	37.298
Gas Meter Calibration Factor	0.986	0.986	0.986
Barometric Pressure at Barom. (in. Hg.)	30.14	30.14	30.14
Elev. Diff. Manom. to Barom. (ft.)	0	0	0
Vol. Gas Sampled Std. Cond. (DSCF)	34.324	34.476	35.476
Vol. Liquid Collected Std. Cond. (SCF)	8.020	6.794	5.913
Moisture in Stack Gas (% Vol.)	18.9	16.5	14.3
Molecular Weight Dry Stack Gas	29.04	29.12	29.30
Molecular Weight Wet Stack Gas	26.95	27.29	27.69
Stack Gas Static Press. (in. H2O gauge)	-0.01	-0.01	-0.01
Stack Gas Static Press. (in. Hg. abs.)	30.14	30.14	30.14
Average Square Root Velocity Head	0.164	0.175	0.178
Average Orifice Differential (in. H2O)	1.049	1.041	1.118
Average Gas Meter Temperature (°F)	80.6	93.7	92.9
Average Stack Gas Temperature (°F)	1240.3	1367.1	1359.6
Pitot Tube Coefficient	0.84	0.84	0.84
Stack Gas Vel. Stack Cond. (ft./sec.)	17.01	18.68	18.85
Effective Stack Area (sq. ft.)	1.77	1.77	1.77
Stack Gas Flow Rate Std. Cond. (DSCFM)	457	482	501
Stack Gas Flow Rate Stack Cond. (ACFM)	1,803	1,981	1,999
Net Time of Run (min.)	60	60	60
Nozzle Diameter (in.)	0.611	0.611	0.611
Percent Isokinetic	108.7	103.6	102.5

TABLE 1. EMISSIONS TEST SUMMARY (con't)

Company: FOSTER'S PET CREMATION SERVICE
Source: Animal Crematory Incinerator

	Run 1	Run 2	Run 3	
Date of Run	3/9/04	3/9/04	3/9/04	
Process Rate (lbs/hr)	124	124	124	
Start Time (24-hr. clock)	1135	1302	1425	
End Time (24-hr. clock)	1238	1403	1526	
Oxygen (%)	8.0	10.0	10.5	
				Average
Particulate Collected (mg.)	34.0	11.1	7.4	
Particulate Emissions (gr./DSCF)	0.015	0.005	0.003	0.008
Particulate Emissions (gr./DSCF @ 7% O2)	0.016	0.006	0.004	0.009
Allowable Part. Emissions (gr./DSCF @ 7% O2)				0.080
Particulate Emissions (lb./hr.)	0.060	0.021	0.014	0.031
Allowable Part. Emissions (lb./hr.)				0.30
CO Emissions (PPM)	3.08	2.25	5.00	4.3
CO Emissions (PPM @ 7% O2)	3.3	2.9	6.7	4.3
Allowable CO Emissions (PPM @ 7% O2)				100
CO Emissions (lb./hr.)	0.006	0.005	0.011	0.007
Allowable CO Emissions (lb./hr.)				0.12

Note: Standard conditions 68°F, 29.92 in. Hg

maximum six minute opacity was zero percent, well within the allowable limit of 5 percent.

3.0 PROCESS DESCRIPTION

The B & L Systems, Inc. Model BLP 500/150 Series crematory incinerator cremates animal remains in an environmentally acceptable manner. Emissions are controlled by an afterburner. The afterburner is preheated and maintained at a minimum operating temperature of 1600°F prior to ignition of the primary chamber. The unit is designed to be charged with a maximum of 500 pounds of animal remains and incinerate at a maximum rate of 150 pounds per hour with a maximum heat input of 1.35 MMBTU per hour (primary chamber 0.35 MMBTU per hour, secondary chamber 1.0 MMBTU/hr), each chamber fired exclusively on propane gas only. The time required for complete incineration depends upon the total weight of the waste. Process operational data was provided by facility personnel and is included in the appendix.

4.0 SAMPLING PROCEDURES

4.1 Methods

All sampling was performed using methods currently acceptable to the FDEP. Particulate sampling and analyses were conducted in accordance with EPA Method 5 - Determination of Particulate Emissions from Stationary Sources, 40 CFR 60, Appendix A-3. Carbon monoxide emissions were conducted in accordance with EPA Method 10 - Determination of Carbon Monoxide Emissions from Stationary Sources, 40 CFR 60, Appendix A-4. The oxygen content of the stack gas was determined in accordance with EPA Method 3B - Gas

Analysis for the Determination of Emission Rate Correction Factor or Excess Air, 40 CFR 60, Appendix A-2. The visible emissions evaluation was performed using procedures described in EPA Method 9 - Visual Determination of the Opacity of Emissions from Stationary Sources, 40 CFR 60, Appendix A-4.

4.2 Sampling Locations

Locations of the sample ports and stack dimensions are shown in Figure 1. Particulate sampling was accomplished by conducting horizontal traverses through each of two ports located on the stack at a ninety degree angle from one another. Twenty four sample points were chosen in accordance with EPA Method 1 - Sample and Velocity Traverses for Stationary Sources, 40 CFR 60, Appendix A-1. Carbon monoxide and oxygen sampling were performed from the same sampling ports as the particulate sampling.

4.3 Sampling Trains

The particulate sampling train consisted of a Nutech Corporation 3 foot quartz lined probe and nozzle, a heated glass fiber filter and four impingers arranged as shown in Figure 2. Flexible tubing was used between the heated filter and the impingers. The first two impingers were each charged with 100 milliliters of water, the third served as a dry trap and the fourth impinger was charged with indicating silica gel desiccant. The impingers were cooled in an ice and water bath during sampling. A Nutech Corporation control console was used to monitor the gas flow rates and stack conditions during sampling.

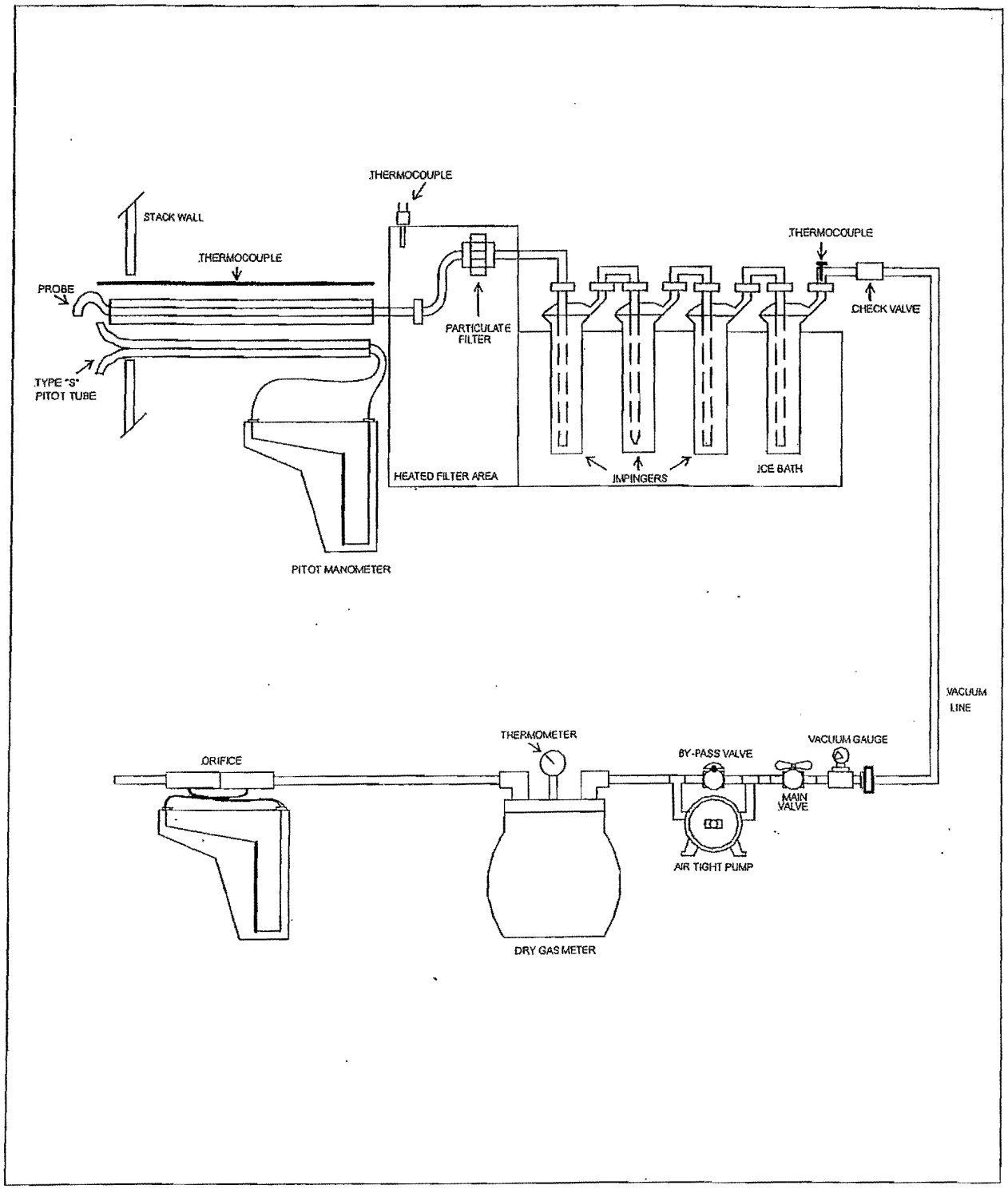

Figure 2. EPA Method 5 Sampling Train.

The carbon monoxide sampling train consisted of a stainless steel probe, teflon sample line, condenser, silica gel and carbon dioxide adsorbent tubes and a Thermo Environmental Instruments, Inc. Model 48 Gas Filter Correlation CO analyzer arranged as shown in Figure 3. The oxygen sampling train consisted of a probe, sample line, tedlar bag in a rigid container, valve, vacuum pump, and flow meter.

4.4 Sample Collection

Prior to particulate sampling, the pitot tubes were checked for leaks and the manometers were zeroed. A pretest leak check of the particulate sampling train was conducted by sealing the nozzle and applying a 15" Hg vacuum. A leak rate of less than 0.02 cubic feet per minute was considered acceptable. Particulate sample was collected isokinetically for two and one half minutes at each of the points sampled.

The carbon monoxide analyzer was calibrated immediately prior to the beginning of the test and checked after each run by introducing known gases into the instrument through the sampling train.

The tedlar bag used for obtaining an integrated oxygen sample was leak checked prior to the test by pressurizing it to 2 to 4 in. H_2O and allowing it to stand overnight. The bag was considered leak free if it remained inflated. A one hour integrated sample was obtained at a rate 0.5 liters per minute for each run.

Carbon monoxide and oxygen sampling were conducted simultaneously with particulate

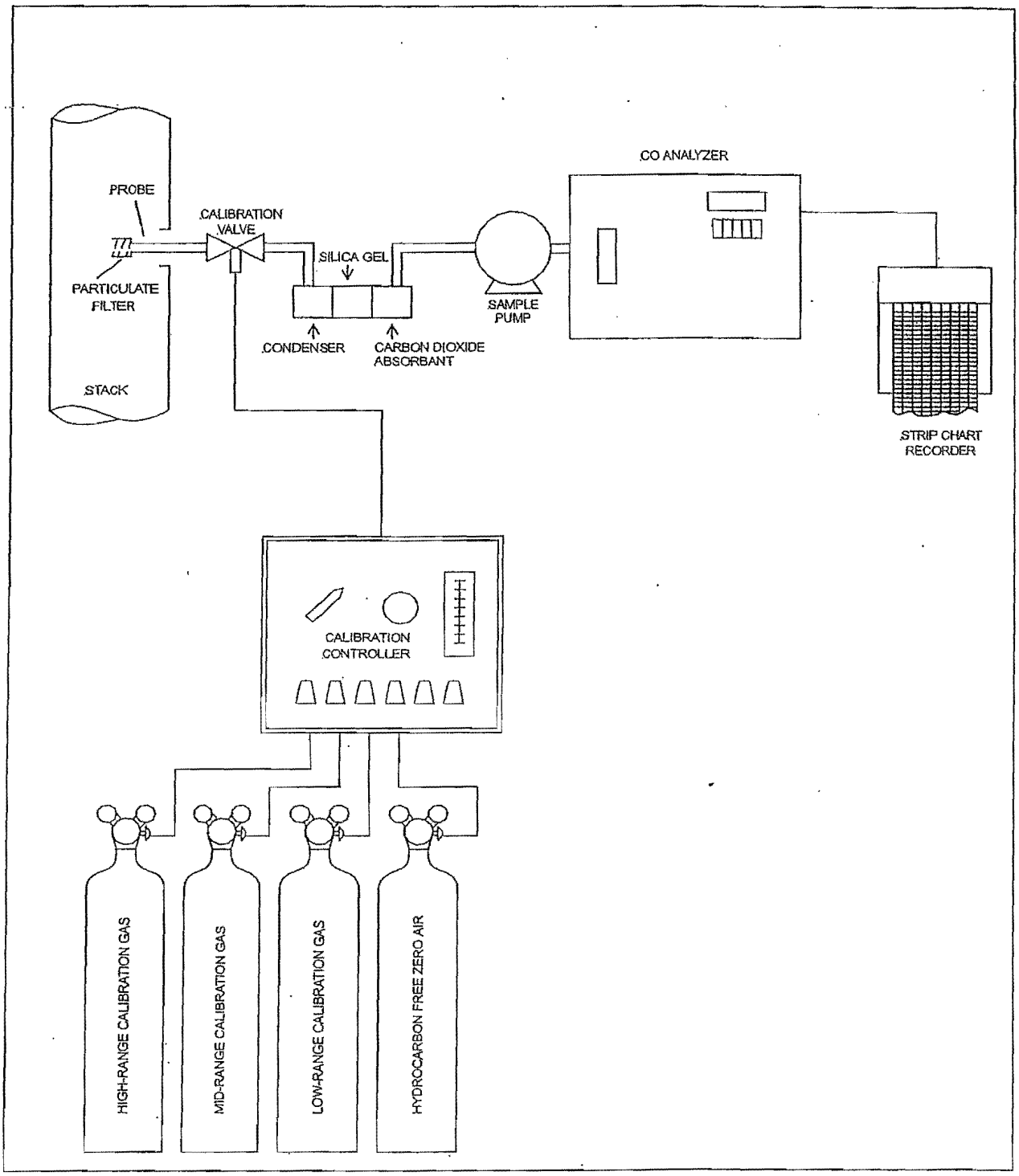

Figure 3. EPA Method 10 Sampling Train.

sampling.

4.5 Sample Recovery

A post test leak check of the particulate sampling train was performed at the completion of each run by sealing the nozzle and applying a vacuum equal to or greater than the maximum value reached during the sample period. A leak rate of less than 0.02 CFM or 4 percent of the average sampling rate (whichever was less) was considered acceptable. The nozzle and probe were then brushed and rinsed with reagent grade acetone and the washings were placed in clean polyethylene containers and sealed. The glass fiber filter was removed from the holder with forceps and placed in a covered petri dish for return to the laboratory. The front half of the filter holder was rinsed with acetone and the washings were added to the nozzle and probe wash. The contents of the first three impingers were measured volumetrically and the silica gel in the fourth impinger was weighed to the nearest 0.1 gram for determination of moisture content.

Two calculations of the moisture content of the stack gas were made for each run, one from the impinger analysis and one from the assumption of saturated conditions based upon the average stack gas temperature and a psychrometric chart as described in EPA Method 4, Determination of Moisture Content in Stack Gases, 40 CFR 60, Appendix A. The lower of the two values of moisture content was considered to be correct and was used in the emissions computations.

5.0 ANALYTICAL PROCEDURE

5.1 Pretest Preparation

The glass fiber filters for the particulate train were numbered, oven dried at 105°C for two to three hours, desiccated and weighed to a constant weight in preparation for the test. Results were recorded to the nearest 0.1 milligram. Filters were loaded into holders and a filter was set aside as a control blank. The impingers were charged as described in section 4.3 and the contents of the fourth impinger were weighed to the nearest 0.1 gram.

5.2 Analysis

Upon return to the laboratory, the particulate filters were removed from the containers with forceps, dried at 105°C for two to three hours, desiccated and weighed to a constant weight. Results were recorded to the nearest 0.1 milligram. The probe and nozzle washes and an acetone blank were measured volumetrically and transferred to clean, tared evaporating dishes and evaporated to dryness over low heat. The evaporating dishes were then oven dried at 105°C for two to three hours, desiccated and weighed to a constant weight. Results were recorded to the nearest 0.1 milligram. The total particulate reported is the sum of the filter weight gain and the weight gain of the evaporating dishes, corrected for the acetone blank.

APPENDIX

Project Participants

Certification

Visible Emissions Evaluation

Process Operational Data

Laboratory Data

Temperature Recording Chart

Field Data Sheets

CO Analyzer Strip Chart

Calibration Data

Calculations and Symbols

PROJECT PARTICIPANTS AND CERTIFICATION

FOSTER'S PET CREMATION SERVICE
B & L SYSTEMS, INC. BLP 500/150
ANIMAL CREMATORY INCINERATOR
Spring Hill, Florida

March 9, 2004

Project Participants:

Mark S. Gierke Dale A. Wingler Travis B. Nelson	Conducted the field testing.
Fred T. Smith II (Foster's Pet Cremation)	Provided process rates.
Mark S. Gierke	Performed visible emissions evaluation.
Kenneth M. Roberts	Performed laboratory analyses.
Dale A. Wingler	Prepared the final test report.

Certification:

I certify that to my knowledge all data submitted in this report is true and correct.

Mark S. Gierke

SOUTHERN ENVIRONMENTAL SCIENCES, INC.

1204 North Wheeler Street, Plant City, Florida 33566 (813)752-5014

VISIBLE EMISSIONS EVALUATION

COMPANY: Foster's Pet Cremation Service

UNIT: Animal Crematory Incinerator

ADDRESS: 15204 County Line Rd, Spring Hill, FL

PERMIT NO. 1010377-002-AO	COMPLIANCE? YES ☒ NO ☐
AIRS NO. 1010377	EU NO. 003
PROCESS RATE 497 lb Batch, 124 lbs/hr	PERMITTED RATE 500 lb Batch, 150 lbs/hr
PROCESS EQUIPMENT: Bth 500/150 Crematory	
CONTROL EQUIPMENT: Afterburner	
OPERATING MODE: Nat. Gas Fired	AMBIENT TEMP. (°F) START 70 STOP 75
HEIGHT ABOVE GROUND LEVEL START ~20' STOP same	HEIGHT REL. TO OBSERVER START ~20' STOP same
DISTANCE FROM OBSERVER START ~80' STOP same	DIRECTION FROM OBSERVER START 350° STOP 350°
EMISSION COLOR: NONE	PLUME TYPE N/A CONTIN. ☐ INTERMITTENT ☐
WATER DROPLETS PRESENT NO ☒ YES ☐	IS WATER DROPLET PLUME N/A ATTACHED ☐ DETACHED ☐
POINT IN THE PLUME AT WHICH OPACITY WAS DETERMINED START Stack Exit STOP same	
DESCRIBE BACKGROUND START Sky STOP same	
BACKGROUND COLOR START Sl Blu STOP same	SKY CONDITIONS START Sea H. STOP same
WIND SPEED (MPH) START 3-10 STOP same	WIND DIRECTION START S STOP S
AVERAGE OPACITY FOR HIGHEST PERIOD 0%	RANGE OF OPAC. READINGS MIN. 0 MAX. 0

SOURCE LAYOUT SKETCH — DRAW NORTH ARROW

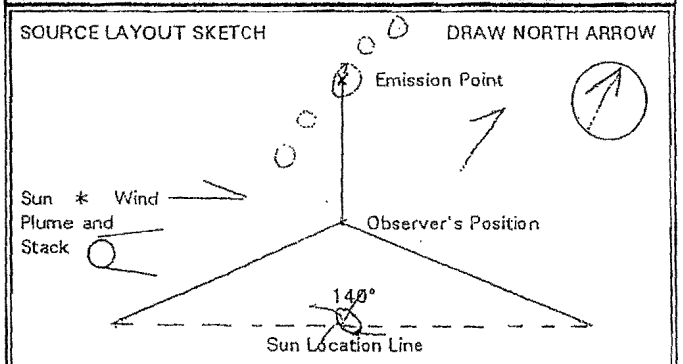

COMMENTS: Serial # 203-17-93 #3 Incinerator

OBSERVATION DATE	START TIME	STOP TIME
3/9/04	1135	1235

SEC / MIN	0	15	30	45	SEC / MIN	0	15	30	45
0	0	0	0	0	30	0	0	0	0
1	0	0	0	0	31	0	0	0	0
2	0	0	0	0	32	0	0	0	0
3	0	0	0	0	33	0	0	0	0
4	0	0	0	0	34	0	0	0	0
5	0	0	0	0	35	0	0	0	0
6	0	0	0	0	36	0	0	0	0
7	0	0	0	0	37	0	0	0	0
8	0	0	0	0	38	0	0	0	0
9	0	0	0	0	39	0	0	0	0
10	0	0	0	0	40	0	0	0	0
11	0	0	0	0	41	0	0	0	0
12	0	0	0	0	42	0	0	0	0
13	0	0	0	0	43	0	0	0	0
14	0	0	0	0	44	0	0	0	0
15	0	0	0	0	45	0	0	0	0
16	0	0	0	0	46	0	0	0	0
17	0	0	0	0	47	0	0	0	0
18	0	0	0	0	48	0	0	0	0
19	0	0	0	0	49	0	0	0	0
20	0	0	0	0	50	0	0	0	0
21	0	0	0	0	51	0	0	0	0
22	0	0	0	0	52	0	0	0	0
23	0	0	0	0	53	0	0	0	0
24	0	0	0	0	54	0	0	0	0
25	0	0	0	0	55	0	0	0	0
26	0	0	0	0	56	0	0	0	0
27	0	0	0	0	57	0	0	0	0
28	0	0	0	0	58	0	0	0	0
29	0	0	0	0	59	0	0	0	0

Observer: Mark Gierke

Certified by: FDEP Certified at: Tampa

Date Certified: 2/04 Exp. Date: 8/04

I certify that all data provided to the person conducting the test was true and correct to the best of my knowledge:

Signature: See Process Wt. Statement

Title:

PROCESS WEIGHT STATEMENT

DATE 3/9/04 SAMPLING TIME : FROM 11:35 A.M. TO 3:25 P.M.

STATEMENT OF PROCESS WEIGHT

COMPANY:	Foster's Pet Cremation Service
MAILING ADDRESS	15204 County Line Rd.
	Spring Hill, FL 34610
SOURCE IDENTIFICATION	Animal Crematory Incinerator
SOURCE LOCATION	Spring Hill, FL

DATA ON OPERATING CYCLE TIME

START OF OPERATION, TIME		
END OF OPERATION, TIME		
ELAPSED TIME		
IDLE TIME DURING CYCLE		
DESIGN PROCESS RATING	PROCESS WEIGHT RATE (INPUT)	
	PRODUCT (OUTPUT)	

* 497 lbs/Batch

DATA ON ACTUAL PROCESS RATE DURING OPERATION CYCLE

MATERIAL	Animal Bodies	RATE	R#1 124 lbs/hr
MATERIAL	" "	RATE	R#2 124 lbs/hr
MATERIAL	" "	RATE	R#3 124 lbs/hr
AVERAGE PROCESS WEIGHT		RATE	
PRODUCT		RATE	
PRODUCT		RATE	
PRODUCT		RATE	

I certify that the above information is true and correct to the best of my knowledge.

Name (PLEASE PRINT) Fred T. Smith

Signature Fred T. Smith

Title Operator

FOSTER'S PET CREMATION SERVICE
ANIMAL CREMATORY INCINERATOR
MARCH 9, 2004

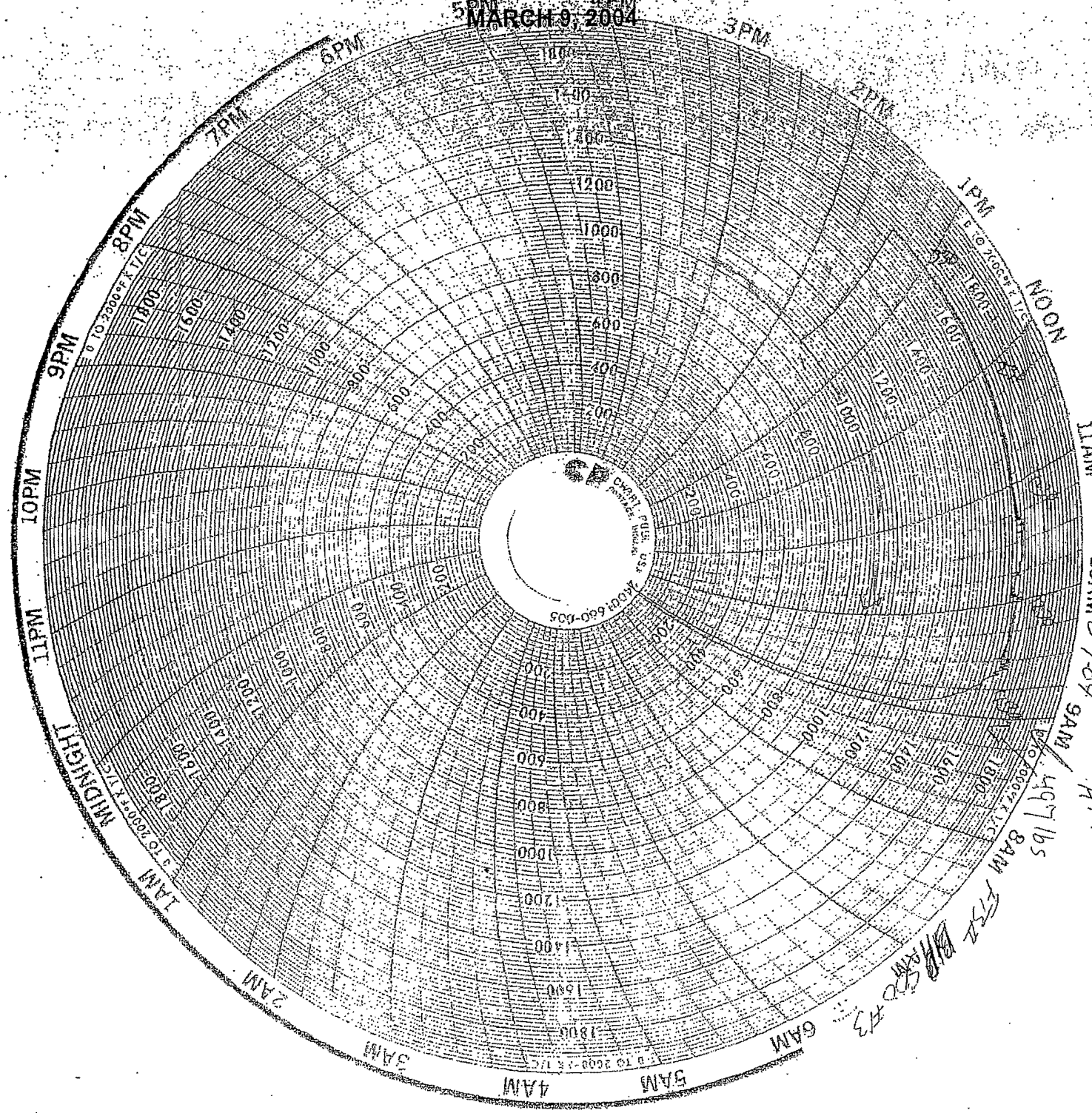

SOUTHERN ENVIRONMENTAL SCIENCES, INC.

PARTICULATE MATTER COLLECTED

Plant: FOSTER'S PET CREMATION SERVICE
Unit No. ANIMAL CREMATORY INCINERATOR
Test Date: 03/09/2004

Analyzed by: DW

Acetone blank container no.	106	Filter blank no.	7158
Acetone blank volume, ml.,(Va)	200	Filter blank tare weight, g.	0.3691
Acetone blank final weight, g.	104.2163	Filter blank final weight, g.	0.3692
Acetone blank tare weight, g.	104.2159	Filter weight diff., g.	0.0001
Acetone blank weight diff.,g.,(ma)	0.0004		

Run No.	1
Filter No.	7111
Liquid lost during transport, ml.	0
Acetone wash container no.	23
Acetone wash volume, ml. (Vaw)	100
Acetone wash residue, g. (Wa)	0.0002

Container Number	WEIGHT OF PARTICULATE COLLECTED		
	Final Weight	Tare Weight	Weight Gain
1 (Filter)	0.3935	0.367	0.0265
2 (Wash)	100.6231	100.6154	0.0077
		TOTAL	0.0342
		Less acetone blank, g. (Wa)	0.0002
		Weight of particulate matter, g.	0.0340

Run No.	2
Filter No.	7113
Liquid lost during transport, ml.	0
Acetone wash container no.	43
Acetone wash volume, ml. (Vaw)	95
Acetone wash residue, g. (Wa)	0.0002

Container Number	WEIGHT OF PARTICULATE COLLECTED		
	Final Weight	Tare Weight	Weight Gain
1 (Filter)	0.3686	0.3661	0.0025
2 (Wash)	108.7303	108.7215	0.0088
		TOTAL	0.0113
		Less acetone blank, g. (Wa)	0.0002
		Weight of particulate matter, g.	0.0111

Run No.	3
Filter No.	7117
Liquid lost during transport, ml.	0
Acetone wash container no.	4
Acetone wash volume, ml. (Vaw)	105
Acetone wash residue, g. (Wa)	0.0002

Container Number	WEIGHT OF PARTICULATE COLLECTED		
	Final Weight	Tare Weight	Weight Gain
1 (Filter)	0.3695	0.3692	0.0003
2 (Wash)	103.1044	103.0971	0.0073
		TOTAL	0.0076
		Less acetone blank, g. (Wa)	0.0002
		Weight of particulate matter, g.	0.0074

SOUTHERN ENVIRONMENTAL SCIENCES, INC.

MOISTURE COLLECTED

Plant: Foster's Crematory

Unit: Animal Incinerator
Date: 3/9/04
Run No.: 1

Impinger Number	1	2	3	4	Weighed by:
Final Weight (grams):	260.0	100.0	0	261.0	
Initial Weight (grams):	100.0	100.0	0	250.9	
Difference (grams):	160.0	0	0	10.1	
Total Condensate (grams):				170.1	

Unit: Animal Incinerator
Date: ~~[illegible]~~ 3/9/04
Run No.: ~~[illegible]~~ 2

Impinger Number	1	2	3	4	Weighed by:
Final Weight (grams):	230.0	106.0	0	253.9	
Initial Weight (grams):	100.0	100.0	0	245.8	
Difference (grams):	130.0	6.0	0	8.1	
Total Condensate (grams):				144.1	

Unit: Animal Incinerator
Date: 3/9/04
Run No.: 3

Impinger Number	1	2	3	4	Weighed by:
Final Weight (grams):	210.0	106.0	0	255.0	
Initial Weight (grams):	100.0	100.0	0	245.6	
Difference (grams):	110.0	6.0	0	9.4	

SOUTHERN ENVIRONMENTAL SCIENCES, INC.

FIELD DATA SHEET

Company: Foster's Crematory
Source: Animal Crematory Incinerator
Operator(s): D. Winter / T. Nelson

Run Number: 1
Date: 3/9/04
24 hr Time at Start: 1135
24 hr Time at End: 1238
Filter No(s): 711
Barometric Pressure ("Hg): 30.14
Elev Diff. Mano. To Barom. (Ft): 0
Ambient Temperature (°F): 68

Dimensions Dia☐ LxW☐: 18"
Static Press. ("H2O): -.01
Meter Box No.: 002
Meter ΔH@: 1.726
Meter Correction Factor: .986
Pitot Tube Cp: .84
Nozzle ID: Quartz
Nozzle Dia. (Inches): .611
Probe Length/Liner: 3' Quartz

Assumptions
% Moisture: 14
Stack Temp.: 1000/1200
Meter Temp.: 75
Md/Ms: 1.05
K Factor: 42.42/32.31

Sample Train Leak Check:
Initial 0.002 CFM @ 15 "Hg
Final 0.002 CFM @ 10 "Hg
Initial Pitot Tube (-) ___ (+) ___
Final Pitot Tube (-) ___ (+) ___
0-.25" Magnehlic used

Moist. Collected: Imp. No. 1 ___, Imp. No. 2 & 3 ___, Imp. No. 4 ___, Total ___ Filter Tare Wt. ___

Point No.	Sample Time (min.)	Meter Vol. Vm (ft³)	Vel. Head ΔP ("H₂O)	Orifice Diff. ΔH ("H₂O)	Stack Temp., Ts (°F)	Meter Temp., Tm (°F)	Hot Box Temp. (°F)	Exit Temp. (°F)	Pump Vacuum ("Hg)	Other
1	0	045.727	.02	.85	1350	66	269	63	2.0	
2	2.5	47.10	.04	1.7	1348	67	269	63	2.0	
3	5	48.67	.04	1.7	1358	68	267	62	3.0	
4	7.5	50.66	.02	.85	1323	70	265	62	1.5	
5	10	52.04	.02	.85	1299	71	265	61	1.5	
6	12.5	53.36	.02	.85	1280	72	269	62	1.5	
7	15	54.68	.025	.93	1194	73	265	61	2.0	
8	17.5	56.03	.025	.93	1170	74	264	61	1.5	
9	20	57.43	.02	.85	1113	76	256	60	1.5	
10	22.5	58.77	.025	.93	1119	77	249	60	2.0	
11	25	60.10	.025	.93	1152	78	257	60	2.0	
12	27.5	61.54	.025	.93	1180	80	257	59	2.0	
13	30	62.92	.03	1.12	1134	81	256	59	3.0	
14	32.5	64.42	.03	1.12	1142	83	255	59	3.0	
15 3	35	65.95	.03	1.12	1197	84	252	59	3.5	
16	37.5	67.16	.035	1.31	1235	85	260	58	4.0	
17	40	69.15	.035	1.31	1241	87	267	58	4.0	
18 6	42.5	70.83	.03	1.12	1254	89	268	59	4.0	
19	45	72.40	.025	.93	1275	90	262	58	3.5	
20	47.5	73.93	.025	.93	1288	91	268	58	3.5	
21 9	50	75.22	.025	.93	1274	92	263	58	3.5	
22	52.5	76.65	.025	.93	1280	93	258	58	3.5	
23	55	78.06	.03	1.12	1281	94	252	57	4.0	
24	57.5	79.58	.025	.93	1281	94	247	58	4.0	
	60	81.020								

SOUTHERN ENVIRONMENTAL SCIENCES, INC.

FIELD DATA SHEET

Company: Foster's Pet Cremation Service
Source: Animal Crematory
Operator(s): D Wingler / T Nelson

Run Number: 2
Date: 3/9/04
24 hr Time at Start: 1302
24 hr Time at End: 1403
Filter No(s).: 7113
Barometric Pressure ("Hg): 30.14
Elev Diff. Mano. To Barom. (Ft): 0
Ambient Temperature (°F): 72

Dimensions Dia☒
LxW☐ 18"
Static Press. ("H2O) -.01
Meter Box No. 002
Meter ΔH@ 1.726
Meter Correction Factor .996
Pitot Tube Cp .84
Nozzle ID Quartz
Nozzle Dia. (Inches) .611
Probe Length/Liner 3' Quartz

Assumptions
% Moisture 18
Stack Temp. 1350
Meter Temp. [illegible]
Md/Ms 1.04
K Factor 35.48

Sample Train Leak Check:
Initial 0.002 CFM @ 15 "Hg
Final 0.002 CFM @ 10 "Hg
Initial Pitot Tube (-) / (+) /
Final Pitot Tube (-) / (+) /

Moist. Collected:- Imp. No. 1 , Imp. No. 2 & 3 , Imp. No. 4 , Total Filter Tare Wt,

Point No.	Sample Time (min.)	Meter Vol. Vm (ft^3)	Vel. Head ΔP ("H_2O)	Orifice Diff. ΔH ("H_2O)	Stack Temp., Ts (°F)	Meter Temp., Tm (°F)	Hot Box Temp. (°F)	Exit Temp. (°F)	Pump Vacuum ("Hg)	Other
1	0	83.822	.03	1.02	1190	89	241	64	1.0	
2	2.5	85.35	.03	[illegible]	[illegible]	89	242	64	1.0	
3	5	86.86	.035	1.19	1366	90	240	64	1.0	
4	7.5	88.43	.04	1.36	1374	91	241	63	1.0	
5	10	90.12	.04	1.36	1380	92	255	63	1.5	
6	12.5	91.84	.04	1.36	1395	93	263	63	1.5	
7	15	93.57	.03	1.02	1338	93	269	63	1.0	
8	17.5	95.07	.03	1.02	1398	94	267	62	1.0	
9	20	96.57	.03	1.02	1390	94	260	63	1.0	
10	22.5	98.07	.03	1.02	1380	94	263	62	1.0	
11	25	99.57	.03	1.02	1377	94	261	62	1.0	
12	27.5	101.07	.03	1.02	1387	94	257	62	1.0	
13	30	102.56	.03	1.02	1364	94	268	61	1.0	
14	32.5	104.09	.03	1.02	1377	94	270	61	1.0	
15 3	35	105.58	.035	1.19	1376	94	268	60	1.0	
16	37.5	107.18	.03	1.02	1382	94	263	60	1.0	
17	40	108.68	.03	1.02	1399	95	267	60	1.0	
18 6	42.5	110.2	.035	1.19	1402	95	270	58	2.0	
19	45	111.79	.025	.85	1382	96	257	58	1.0	
20	47.5	113.25	.025	.85	1369	96	248	58	1.0	
21 9	50	114.62	.025	.85	1368	96	246	58	1.0	
22	52.5	116.00	.025	.85	1369	96	243	58	1.0	
23	55	117.37	.025	.85	1377	96	241	57	1.0	
24	57.5	118.75	.025	.85	1368	96	244	57	1.0	
	60	120.130								

SOUTHERN ENVIRONMENTAL SCIENCES, INC.

FIELD DATA SHEET

Company: Foster's Pet Cremation Service
Source: Animal Crematory
Operator(s): W. Douglas / T. Nelson

Dimensions Dia☒
LxW☐ 18"
Static Press. ("H2O) -.01
Meter Box No. 002
Meter ΔH@ 1.72C
Meter Correction Factor .986
Pitot Tube Cp .84
Nozzle ID Quartz
Nozzle Dia. (Inches) .611
Probe Length/Liner 3' Quartz

Assumptions
% Moisture 12
Stack Temp. 1375
Meter Temp. 95
Md/Ms 1.05
K Factor 35.17

Run Number 3
Date 3/7/04
24 hr Time at Start 1425
24 hr Time at End 1526
Filter No(s). 7117
Barometric Pressure ("Hg) 30.14
Elev Diff. Mano. To Barom. (Ft) 0
Ambient Temperature (°F) 72

Sample Train Leak Check:
Initial 0.002 CFM @ 15 "Hg
Final 0.002 CFM @ 10 "Hg
Initial Pitot Tube (-) / (+) /
Final Pitot Tube (-) / (+) /

Moist. Collected:- Imp. No. 1 , Imp. No. 2 & 3 , Imp. No. 4 , Total Filter Tare Wt,

Point No.	Sample Time (min.)	Meter Vol. Vm (ft³)	Vel. Head ΔP ("H₂O)	Orifice Diff. ΔH ("H₂O)	Stack Temp., Ts (°F)	Meter Temp., Tm (°F)	Hot Box Temp. (°F)	Exit Temp. (°F)	Pump Vacuum ("Hg)	Other
1	0	121.280	.04	1.41	1345	90	239	65	1.0	
2	2.5	123.00	.035	1.23	1395	90	240	65	1.5	
3	5	124.65	.04	1.41	1395	90	245	65	1.0	
4	7.5	126.39	.035	1.23	1386	90	243	64	1.0	
5	10	128.04	.035	1.23	1328	91	236	64	1.0	
6	12.5	129.69	.03	1.06	1324	91	249	63	1.0	
7	15	131.22	.03	1.06	1329	91	257	63	1.0	
8	17.5	132.72	.03	1.06	1340	92	264	62	1.0	
9	20	134.24	.03	1.06	1350	92	269	62	1.5	
10	22.5	135.76	.035	1.23	1362	92	268	62	1.5	
11	25	137.40	.03	1.06	1371	93	269	61	1.5	
12	22.5	138.91	.03	1.06	1385	93	265	61	1.5	
13	30	140.43	.03	1.06	1391	93	260	61	1.5	
14	32.5	141.96	.03	1.06	1380	93	252	60	1.5	
15 3	35	143.46	.03	1.06	1370	93	248	61	1.0	
16	37.5	144.97	.03	1.06	1352	93	248	60	1.5	
17	40	146.49	.03	1.06	1344	94	252	60	1.5	
18 6	42.5	148.00	.03	1.06	1347	94	257	60	1.5	
19	45	149.51	.03	1.06	1345	95	266	60	1.5	
20	47.5	151.02	.03	1.06	1349	95	267	59	1.5	
21 9	50	152.52	.03	1.06	1360	96	264	59	1.5	
22	52.5	154.04	.03	1.06	1361	96	262	60	1.5	
23	55	155.55	.03	1.06	1363	96	261	60	1.5	
24	57.5	157.10	.03	1.06	1370	96	260	60	1.0	
	60	158.578								

SOUTHERN ENVIRONMENTAL SCIENCES, INC.

GAS ANALYSIS DATA FORM

Plant Foster's Pet Cremation Service	
Unit Animal Crematory Incinerator	Test No. 1
Date 3/9/04	Sampling Location Stack
Sampling Time (24-hr Clock) 1135-1235	
Sample Type: Continuous ☐ Integrated Bag ☒	Grab ☐
Analytical Method Orsat	Ambient Temperature 68°F
Operator MG	

RUN →	1		2		3		Average Net Volume	Multiplier	Molecular Weight of Stack Gas (Dry Basis) (Md)
GAS ↓	Actual Reading	Net	Actual Reading	Net	Actual Reading	Net			
CO_2	4.5	4.5	4.5	4.5	4.5	4.5	4.5	.44	
O_2 (NET IS ACTUAL O_2 READING MINUS ACTUAL CO_2 READING)	12.5	8.0	12.5	8.0	12.6	8.1	8.0	.32	
CO (NET IS ACTUAL CO READING MINUS ACTUAL O_2 READING)								.28	
N_2 (NET IS 100 MINUS ACTUAL CO READING)								.28	
								TOTAL	

SOUTHERN ENVIRONMENTAL SCIENCES, INC.

GAS ANALYSIS DATA FORM

Plant Foster's Pet Cremation Service	
Unit Animal Crematory Incinerator	Test No. 2
Date 3/9/04	Sampling Location Stack
Sampling Time (24-hr Clock) 1302-1402	
Sample Type: Continuous ☐ Integrated Bag. ☒ Grab ☐	
Analytical Method ORSAT	Ambient Temperature 74°F
Operator MG	

RUN →	1		2		3		Average Net Volume	Multiplier	Molecular Weight of Stack Gas (Dry Basis) (Md)
GAS ↓	Actual Reading	Net	Actual Reading	Net	Actual Reading	Net			
CO_2	4.5	4.5	4.5	4.5	4.5	4.5	4.5	.44	
O_2 (NET IS ACTUAL O_2 READING MINUS ACTUAL CO_2 READING)	14.5	10.0	14.5	10.0	14.5	10.0	10.0	.32	
CO (NET IS ACTUAL CO READING MINUS ACTUAL O_2 READING)								.28	
N_2 (NET IS 100 MINUS ACTUAL CO READING)								.28	
								TOTAL	

SOUTHERN ENVIRONMENTAL SCIENCES, INC.

GAS ANALYSIS DATA FORM

Plant Foster's Pet Cremation Service	
Unit Animal Crematory	Test No. 3
Date 3/9/04	Sampling Location Stack
Sampling Time (24-hr Clock) 1425-1525	
Sample Type: Continuous ☐ Integrated Bag ☒	Grab ☐
Analytical Method ORSAT	Ambient Temperature 75°
Operator MG	

RUN →	1		2		3		Average Net Volume	Multiplier	Molecular Weight of Stack Gas (Dry Basis) (Md)
GAS ↓	Actual Reading	Net	Actual Reading	Net	Actual Reading	Net			
CO_2	5.5	5.5	5.5	5.5	5.5	5.5	5.5	.44	
O_2 (NET IS ACTUAL O_2 READING MINUS ACTUAL CO_2 READING)	16.0	10.5	16.0	10.5	16.0	10.5	10.5	.32	
CO (NET IS ACTUAL CO READING MINUS ACTUAL O_2 READING)								.28	
N_2 (NET IS 100 MINUS ACTUAL CO READING)								.28	
								TOTAL	

SOUTHERN ENVIRONMENTAL SCIENCES, INC.

NOZZLE CALIBRATION

Date: 3/9/04 by: [illegible]

Nozzle ID	Run No.	D_1 (INCHES)	D_2 (INCHES)	D_3 (INCHES)	ΔD (INCHES)	D_{AVG} (INCHES)
Quartz	1-3	.611	.611	.611	.000	.611

where: D_1, D_2, D_3 = Nozzle diameter measured on a different diameter (inches).
Tolerance = 0.001 inches

ΔD = Maximum difference in any two measurements (inches).
Tolerance = 0.004 inches

D_{avg} = Average of D_1, D_2, D_3

****

SAMPLE POINT LOCATIONS

Company: Foster's Pet Cremation

Source: Animal Crematory Incinerator

Date: 3/9/04

Stack/Duct Dimensions: 18"

Port Length: 3"

Points corrected for port length?
Yes ☒ No ☐

Sketch of Stack/Duct

Point No.	Distance from Duct Wall (inches)
1	3.5
2	4.2
3	5.1
4	6.2
5	7.5
6	9.4
7	14.6
8	16.5
9	17.4
10	18.9
11	19.8
12	20.5

FOSTER'S PET CREMATION SERVICE
B&L BLP 500/150 ANIMAL CREMATORY
CARBON MONOXIDE 0 - 200 PPM
3/9/04
6 cm/hr

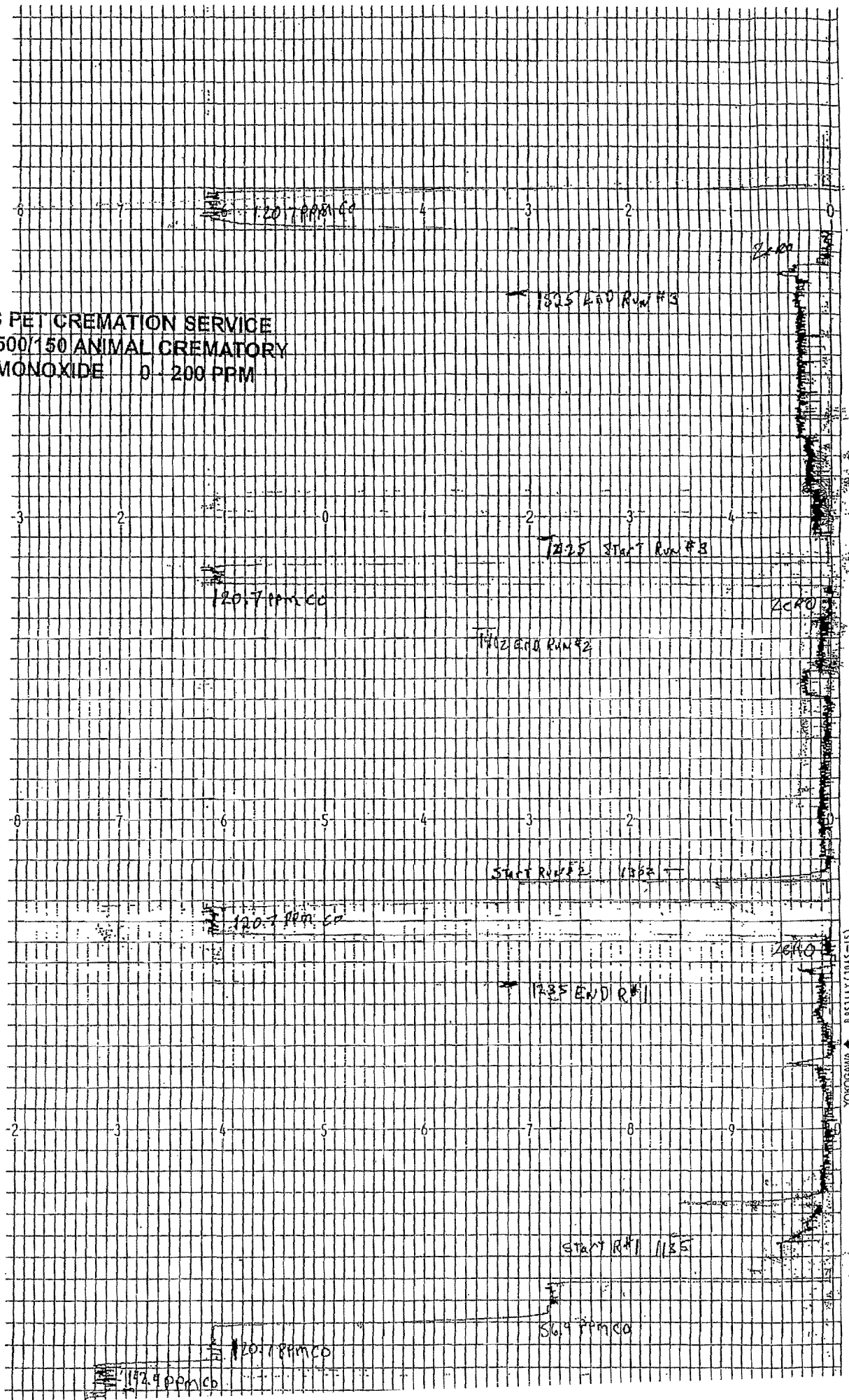

SOUTHERN ENVIRONMENTAL SCIENCES, INC.

DRY GAS METER CALIBRATION

Meter Box Number: 002 Barometric Pressure: 29.99
Date: 07/03/2003 Wet Test Meter No.: P-576

Orifice Manometer Setting (Delta H) in. H2O	Gas Volume Wet Test Meter (Vw) ft.^3	Gas Volume Dry Gas Meter (Vd) ft.^3	Temperature Wet Test Meter (Tw) Deg F	Temperature Dry Gas Meter (Td) Deg F	Time (THETA) Min	Yi	Delta H@ in. H2O
0.50	5.000	5.155	76.0	86.5	12.15	0.988	1.641
1.00	5.000	5.196	76.0	91.0	8.88	0.987	1.738
1.50	10.000	10.428	76.0	93.0	14.28	0.986	1.680
2.00	10.000	10.470	75.5	95.0	12.50	0.985	1.707
3.00	10.000	10.489	75.0	97.0	10.43	0.985	1.773
4.00	10.000	10.485	75.0	98.0	9.15	0.985	1.816
						0.986	1.726

Delta H@ Acceptable Range 1.926 to 1.526
Yi Acceptable Range 1.006 to 0.966

$$Yi = \frac{Vw\ Pb\ (Td + 460)}{Vd\ (Pb + DeltaH/13.6)\ (Tw + 460)}$$

$$Delta\ H@ = \frac{.0317\ (DeltaH)}{Pb\ (Td + 460)}\ [(Tw + 460)\ (Theta)/Vw]^2$$

Where:

Vw = Gas Volume passing through the wet test meter, ft.^3.
Vd = Gas Volume passing through the dry gas meter, ft.^3.
Tw = Temperature of the gas in the wet test meter, deg F.
Tdi = Average temperature of the gas in the dry gas meter, deg F.
Delta H = Pressure differential across orifice. in. H20.
Yi = Ratio of accuracy of wet test meter to dry gas meter for each run.
Y = Average ratio of accuracy of wet test meter to dry gas meter for all three runs; tolerance = pretest Y =/- 0.05Y.
Pb = Barometric pressure, in. Hg
Theta = Time of calibration run, min.

SOUTHERN ENVIRONMENTAL SCIENCES, INC.

POSTTEST DRY GAS METER CALIBRATION FORM

Meter Box Number:	002	Wet Test Meter No.:	P-576
Date:	03/24/2004	Pretest Y:	0.986
Barometric Pressure:	30.38	Calibrated by:	TW

Orifice Manometer Setting (Delta H) in H2O	Gas Volume Wet Test Meter (Vw) ft^3	Gas Volume Dry Gas Meter (Vd) ft^3	Temperature Wet Test Meter (Tw) Deg F	Temperature Dry Gas Meter (Td) Deg F	Time (THETA) Min	Vacuum Setting in Hg	Yi
2.00	10.000	10.363	71.5	78.0	12.57	10.00	0.972
2.00	10.000	10.503	71.0	86.0	12.62	10.00	0.974
2.00	10.000	10.632	71.0	93.0	12.67	10.00	0.975
						Average	0.974

Acceptable Limits 0.937 to 1.035

$$Yi = \frac{Vw\ Pb\ (Td + 460)}{Vd\ (Pb+DeltaH/13.6)\ (Tw + 460)}$$

Where:

Vw = Gas volume passing through the wet test meter, ft.^3.
Vd = Gas volume passing through the dry gas meter, ft.^3.
Tw = Temperature of the gas in the wet test meter, deg F.
Tdi = Temperature of the inlet gas of the dry gas meter, deg F.
Tdo = Temperature of the outlet gas of the dry gas meter, deg F.
Delta H = Pressure differential across orifice. in. H20.
Yi = Ratio of accuracy of wet test meter to dry gas meter for each run.
Y = Average ratio of accuracy of wet test meter to dry gas meter for all three runs; tolerance = pretest Y =/- 0.05Y.
Pb = Barometric pressure, in. Hg
Theta = Time of calibration run, min.

THERMOMETER CALIBRATIONS

Ref	Wet Test Meter		Dry Gas Meter	
Deg F	Inlet Deg F	Outlet Deg F	Inlet Deg F	Outlet Deg F
75.0	n/a	73.0	n/a	73.0
Difference	n/a	2.0	n/a	2.0

Quality Control Limits = +/- 5 Deg F

SOUTHERN ENVIRONMENTAL SCIENCES, INC.

TYPE S PITOT TUBE INSPECTION FORM

PITOT TUBE ID NUMBER	003INC	
INSPECTION DATE	03/31/03	
INSPECTED BY	T. Wilson	
PITOT TUBE ASSEMBLY LEVEL ?	YES	NO
PITOT TUBE OPENINGS DAMAGED ?	YES (explain please)	NO

ANGLE	MEASUREMENT	LIMITS
α1	2°	<10°
a2	3°	<10°
b1	3°	<5°
b2	2°	<5°
Y	2°	
θ	3°	
A	.290 inches	
z = A sin Y	.010 inches	< 1/8 inch
w = A sin θ	.015inches	< 1/32 inch
Pa	.145 inches	
Pb	.145 inches	
Dt	.190 inches	

COMMENTS:

CALIBRATION REQUIRED	YES	NO

SOUTHERN ENVIRONMENTAL SCIENCES, INC.
THERMOMETER CALIBRATIONS

Calibrated By/Date: T. Wilson 3/31/03

ALL TEMPERATURES ARE DEGREES RANKIN

ID No.	Type	Range	ICE BATH			TEPID WATER			BOILING WATER			HOT OIL		
			STD Therm	Temp	Deg or Diff	STD Therm	Temp	Deg or Diff	STD Therm	Temp	Deg or Diff	STD Therm	Temp	Deg or Diff
T1	PT	2000° F	495	496	0.2%	539	537	0.1%	672	670	0.2%	860	861	0.3%
T2	PT	2000° F	495	497	0.2%	539	537	0.1%	673	672	0.2%	870	872	0.3%
T3	PT	2000° F	495	497	0.2%	539	538	0.1%	673	671	0.3%	870	872	0.2%
T4	PT	2000° F	494	496	0.2%	539	538	0.1%	674	672	0.3%	863	864	0.2%
T5	PT	2000° F	494	496	0.2%	539	538	0.2%	672	670	0.2%	860	862	0.2%
T6	PT	2000° F	494	496	0.2%	539	537	0.3%	672	674	0.3%	852	854	0.2%
T7	PT	2000° F	495	497	0.2%	539	538	0.3%	673	671	0.2%	853	854	0.3%
T8	PT	2000° F	495	496	0.1%	539	537	0.2%	674	672	0.1%	864	865	0.2%
T9	PT	2000° F	495	497	0.1%	539	538	0.3%	673	671	0.1%	854	856	0.3%
Lab I4	BM	212° F	494	495	1°	536	535	1°	672	673	2°	-	-	
I5	BM	250° F	494	495	1°	536	535	1°	672	672	2°	-	-	
I6	BM	220° F	494	496	1°	536	536	2°	672	672	3°	-	-	
SS110	BM	220° F	494	496	1°	540	539	2°	670	672	2°	-	-	
SS300	PT	2000 °F	495	497	0.2%	540	538	0.1%	674	672	0.2%	850	852	0.2%
SS301	PT	2000° F	495	497	0.2%	540	538	0.2%	672	670	0.1%	856	858	0.2%
SS306	PT	2000° F	495	496	0.2%	540	538	0.2%	672	670	0.2%	856	858	0.2%
2.5'PA	PT	2000° F	495	496	0.2%	541	538	0.0%	673	672	0.2%	852	854	0.3%
2.5'PB	PT	2000° F	495	497	0.2%	541	538	0.0%	672	674	0.3%	856	858	0.3%
3'P	PT	2000° F	495	497	0.2%	541	539	0.1%	673	675	0.2%	858	860	0.3%
3'INC	PT	2000° F	494	496	0.1%	540	538	0.1%	676	678	0.2%	852	854	0.3%
5'PA	PT	2000° F	494	496	0.3%	540	539	0.0%	672	674	0.3%	856	858	0.2%
5'PB	PT	2000° F	495	497	0.3%	540	538	0.1%	674	672	0.3%	856	858	0.3%
5'PC	PT	2000° F	495	497	0.3%	540	538	0.2%	674	672	0.1%	856	858	0.3%
5'VP	PT	2000° F	495	497	0.2%	541	540	0.2%	676	678	0.2%	856	858	0.2%
5'INC	PT	2000° F	494	496	0.3%	542	540	0.1%	674	676	0.1%	850	852	0.3%
8'PA	PT	2000° F	494	496	0.3%	541	538	0.0%	676	678	0.2%	856	858	0.2%
8'PB	PT	2000° F	494	495	0.3%	541	539	0.1%	676	678	0.3%	856	858	0.2%
10'P	PT	2000° F	494	495	0.2%	541	539	0.0%	674	676	0.3%	854	856	0.2%

Quality Control Limits: Impinger Thermometers ± 2°F, Bimetalic Thermometers(Bm) ± 5°F, Pyrometers/Thermocouples(PT) ± 1.5%

SOUTHERN ENVIRONMENTAL SCIENCES, INC.

PRESSURE MEASUREMENT DEVICE CALIBRATION FORM

Device Type	Magnehelic	Calibration Date	04/01/2003
Range	0 - .25" H2O	Calibrated by	K. Roberts
Manufacturer	Dwyer	Reference Device	. Manometer
Serial No.	R991014CA18	Measurement Units	' H2O

Device Reading	Reference Device Reading	% Difference*
0	0	0.00
0.059	0.06	-1.67
0.119	0.12	-0.83
0.18	0.18	0.00
0.249	0.25	-0.40

* % difference shall not exceed +/- 5%

SOUTHERN ENVIRONMENTAL SCIENCES, INC.

1204 North Wheeler Street St. Plant City, Florida 33563 (813) 752-5014

INSTRUMENT CALIBRATION

TEST DATA	
DATE	03/09/2004
COMPANY	FOSTER'S PET CREMATION SERVICE
SOURCE	BLP 500/150 ANIMAL CREMATORY
PARAMETER	CARBON MONOXIDE
TECHNICIAN	M. GIERKE

INSTRUMENT DATA		
	MONITOR	RECORDER
MANUFACTURER	TECO	Yokogawa
MODEL NO	48	
SERIAL NO	48-27158-228	
RANGE (PPM)	200	6CM/HR

CALIBRATION GASES			
SUPPLIER	AIR PRODUCTS	AIR PRODUCTS	AIR PRODUCTS
CYLINDER #	SG9170323	SX32489	SG9162702
CONC. (PPM)	56.9	120.7	142.4
EXPIRATION DATE	04/25/2004	01/06/2006	09/30/2006

POINT	OBSERVED CONC	ACTUAL CONC	PERCENT DIFF
1	0	0	0.00
2	55.6	56.9	-0.65
3	122	120.7	0.65
4	142	142.4	-0.20

Regression Output:

Constant		1.6234
Std Error of Est		1.9109
R Squared		1.0000
No. of Observations		4
Degrees of Freedom		2
X Coefficient(s)	1.0058	
Std Error Coef	0.0029	

or Technical Information Call
-800-752-1597

AIR PRODUCTS

· Products and Chemicals, Inc. * 12722 S. Wentworth Avenue, Chicago, IL 60628

ISO CERTIFICATION: 9002

CERTIFICATE OF ANALYSIS: EPA PROTOCOL GAS STANDARD

PERFORMED ACCORDING TO EPA TRACEABILITY PROTOCOL FOR ASSAY AND CERTIFICATION OF GASEOUS CALIBRATION STANDARDS (PROCEDURE #G1)

tomer: 851 -1
CI-LARGO
00 118TH AVENUE NORTH
RGO FL 33773-

Order No: CSS704108-01
Batch No: 86181785
PO:
Release:

Cylinder No: SG9170323BAL
Bar Code No: FHK790
Cylinder Pressure*: 2000 psig
Certification Date: 04/25/2001
Expiration Date: 04/25/2004

CERTIFIED CONCENTRATION		REFERENCE STANDARDS			ANALYTICAL INSTRUMENTATION			
omponent	Certified Concentration	Cylinder Number	Standard Type	Standard Concentration	Instrument Make/Model	Serial Number	Last Calibration	Measurement Principal
RBON MONOXIDE	56.9±.60 PPM	SG9161497BAL	NTRM 81679	99.90 PPM	HORIBA VIA-510	405079	04/01/01	NON DISPERSIVE INFRARED

ROGEN Balance Gas

* STANDARD SHOULD NOT BE USED BELOW 150 PSIG

EPA PROTOCOL GAS MIXTURE : CARBON MONOXIDE IN NITROGEN
To reorder this mixture please use Mix ID: 27578

st: Suzanne Hauter
SUZANNE HAUTER

Approved By: James Laas
James Laas

1)

Pub. No. 320-9702

Airgas

Airgas Specialty Gases
12722 South Wentworth Avenue
Chicago, IL 60628
773.785.3000 Fax 773.785.1928
www.airgas.com

Certificate of Analysis: E.P.A. Protocol Gas Mixture

Certification performed in accordance with "EPA Traceability Protocol (Sept.1997)" using assay procedures listed.

Cylinder No:	SX32489	Order No:	157779-00
Certification Date:	01/6/2003	Expiration Date:	01/6/2006
Cylinder Pressure:	2000	Part No:	E02NI99E15A0700

*Do not use cylinder below 150 psig.

Component	Certified Concentration	Unit of Measure	Accuracy	Procedure	Analytical Principle
Carbon Monoxide	120.7	PPM	1%	G-1	NDIR
Nitrogen	Balance				

Nox
(Reference Value Only)

Reference Standard Information

Type	Component	Concentration	Unit	Cylinder Number
NTRM	Carbon Monoxide	244.7	PPM	SG9159519BAL

Analytical Data

Component 1 Carbon Monoxide

1st Analysis Date: 12/30/2002

Zero	0.000	Cand	120.700	Ref	244.800
Zero	0.000	Cand	120.700	Ref	244.800
Zero	0.000	Cand	120.700	Ref	244.800

2nd Analysis Date: 01/06/03

Zero	0.000	Cand	120.800	Ref	244.800
Zero	0.000	Cand	120.800	Ref	244.800
Zero	0.000	Cand	120.900	Ref	244.700

Analyzed by: [signature]

Approved by: [signature]

Airgas

Airgas Specialty Gases
12722 South Wentworth Avenue
Chicago, IL 60628
773.785.3000 Fax: 773.785.1928
www.airgas.com

Certificate of Analysis EPA Protocol Gas Mixture

Cylinder No:	SG9162702BAL	Reference Number:	54-ST9736-000
Cylinder Pressure:	2,013 psig	Expiration Date:	09/30/2006
Certification Date:	09/30/2003	Laboratory:	ASG - Chicago - IL

Certified Concentrations

Component	Concentration	Accuracy	Analytical Principle	Procedure
Carbon Monoxide	142.4 PPM	+/- 1%	NDIR	G1
Nitrogen	Balance			

Certification performed in accordance with "EPA Traceability Protocol (Sept. 1997)" using the assay procedures listed.
Analytical Methodology does not require correction for analytical interferences.

Notes:

Do not use cylinder below 150 psig.

Approved for Release

Reference Standard Information

Type	Component	Cyl. Number	Concentration
NTRM	Carbon Monoxide	SG9159474BAL	244.7 PPM

Analytical Results

1st Component Carbon Monoxide

1st Analysis Date: 09/22/2003

R	244.7	S	142.3	Z	0.0000	Conc	142.4 PPM
S	142.4	Z	0.0000	R	244.7	Conc	142.3 PPM
Z	0.0000	R	244.7	S	142.4	Conc	142.4 PPM
						AVG:	142.4 PPM

2nd Analysis Date: 09/30/2003

R	244.7	S	142.5	Z	0.0000	Conc	142.4 PPM
S	142.4	Z	0.0000	R	244.7	Conc	142.5 PPM
Z	0.0000	R	244.7	S	142.5	Conc	142.5 PPM
						AVG:	142.5 PPM

CO EMISSION TEST CALCULATIONS

COMPANY: FOSTER'S PET CREMATION SERVICE
SOURCE: B&L BLP 500/150 ANIMAL CREMATORY
TEST DATE: 03/09/2004
Data analyst: MG

Run No.	Average CO (PPM)	Average O2 (%)	Average CO @ 7% O2 (PPM)	Stack Flowrate (dscfm)	Emissions mg/m3	Emissions lbs/ft3	Emissions lbs/hr
1	3.08	8.0	3.3	457	3.6	2.24E-007	0.006
2	2.25	10.0	2.9	482	2.6	1.64E-007	0.005
3	5.0	10.5	6.7	501	5.8	3.63E-007	0.011
Averages	3.44	9.5	4.3	480	4.0	2.50E-007	0.007

FORMULAS:

CO @ 7% O2 = Actual CO x (14/(21-%02)

mg/m3 = ppm x .041573 x molecular wt.

$$lb/ft3 = \frac{mg/m3}{35.31\ ft^3/m^3 \times 1000 mg/g \times 453.59\ g/lb}$$

lb/hr = lb/ft3 x flowrate x 60 min/hr

where:

Pstd = 29.92 "Hg
Tstd = 528 deg R
Molecular Weight of CO = 28

SOUTHERN ENVIRONMENTAL SCIENCES, INC.

EMISSIONS TEST CALCULATIONS

Plant: FOSTER'S PET CREMATION SERVICE
Unit: ANIMAL CREMATORY INCINERATOR
Run No: 2

Test Date: 03/09/2004
Data Input By: DW

Pbar = (Pbar at barom.) - (Elev. diff. barom. to manom., ft.) x (.1/100)
= 30.14 - 0 x (0.1/100) = **30.14**

$$Pm = Pbar + \frac{Delta\ H}{13.6} = 30.14 + \frac{1.041}{13.6} = \mathbf{30.22}$$

$$Vm(std) = (Vm) \times (Y) \times \frac{(Tstd, deg\ R) \times (Pm)}{(Tm, deg\ R) \times (Pstd)}$$

$$= 36.308 \times 0.986 \times \frac{528 \times 30.22}{553.7 \times 29.92} = \mathbf{34.476}$$

Vw(std) = Vlc x (.04715) = 144.1 x 0.04715 = **6.794**

$$Bws = \frac{Vw(std)}{Vw(std) + Vm(std)} = \frac{6.794}{6.794 + 34.476} = \mathbf{0.165}$$

Bws @ saturation = **0.99**
1 - Bws = **0.835** USE LOWER BWS

Md = 0.44(%CO2) + .32(%O2) + .28(%N2+%CO)
= .44 x 4.5 + .32 x 10 + 0.28 78
= **assume** **29.12**

Ms = Md(1-Bws) + 18(Bws) = 29.12 * 0.835 + 18 * 0.165
= **27.29**

$$Ps = Pbar + \frac{(Pg, in.\ H2O)}{13.6} = 30.14 + \frac{-0.01}{13.6} = \mathbf{30.14}$$

Vs = 85.49 x (Cp) x (avg sqrt delta P) x sqrt[(Ts,~R)/(Ps)(Ms)]
= 85.49 x 0.84 x 0.175 x sqrt 1827.1 / 30.14 x 27.29
= **18.68**

$$An = \frac{[(Nozzle\ diam, in./12)^2 \times 3.14159]}{4} \quad \frac{0.611\ /12)^2 \times 3.14159]}{4} = \mathbf{0.00204}$$

$$\%I = \frac{(.09450) \times (Ts, deg\ R) \times (Vm(std)}{(Ps) \times (Vs) \times (An) \times (Sample\ Time) \times (1-Bws)}$$

$$= \frac{0.0945 \times 1827.1 \times 34.476}{30.14 \times 18.68 \times 0.0020361 \times 60 \times 0.835}$$

= **103.6**

SOUTHERN ENVIRONMENTAL SCIENCES, INC.

EMISSIONS TEST CALCULATIONS

Plant: FOSTER'S PET CREMATION SERVICE
Unit: ANIMAL CREMATORY INCINERATOR
Run No: 2

Test Date: 03/09/2004
Data Input By: DW

As = (Stack Diam., ft.)^2 x 3.14 / 4 = 1.5)^2 x 3.14 / 4 = **1.77**

As.eff = As x (total No. pts.-No. neg. pts.) / (Total No. pts.) = 1.767146 x (24) - (0) / (24) = **1.77**

Q = 60(As,eff)(Vs) = 60 x 1.77 x 18.68 = **1,981**

Qstd = (Q) x (Tstd) x (Ps) x (1-B / (Ts,degR) x (Pstd) = 1980.505 x 528 x 30.139265 x 0.83537 / 1827.125 x 29.92

= **482**

Cs = (.01543) x (mn, mg) / Vm(std) 0.01543 x 11.1 / 34.4759 = **0.00497**

PMR = (Cs)(Qstd)(6 / 7000 = 0.0050 x 481.60559 x 60 / 7000 = **0.02**

Emissions calculations in emissions test summary may differ slightly from example calculations due to rounding of some numbers in example.

Southern Environmental Sciences, Inc.
1204 North Wheeler Street ☐ Plant City, Florida 33566-2354 ☐ (813) 752-5014

NOMENCLATURE USED IN STACK SAMPLING CALCULATIONS

A_n = Cross-sectional area of nozzle, ft^2

A_s = Cross-sectional area of stack, ft^2

B_{ws} = Water vapor in gas stream, proportion by volume

C_p = Pitot coefficient

C_s = Pollutant concentration, gr/DSCF

F_d = Ratio of gas generated to heat value of fuel, DSCF/mm BTU

ΔH = Average pressure differential across orifice, in. H_2O

%I = Isokinetic variation, %

M_d = Molecular weight of dry gas

M_n = Total amount of pollutant collected, mg

M_s = Molecular weight of stack gas

N = Normality of barium perchlorate titrant

$\sqrt{\Delta P_{avg}}$ = Average of the square roots of the velocity heads

P_{bar} = Barometric pressure at the sampling site, in. Hg

P_g = Stack gas static pressure, in. H_2O

P_m = Absolute pressure at the dry gas meter, in. Hg

P_s = Absolute stack pressure, in. Hg

PMR = Pollutant mass rate, lb/hr

P_{std} = Standard absolute pressure, 29.92 in. Hg

θ = Total sampling time, minutes

Southern Environmental Sciences, Inc.
1204 North Wheeler Street ☐ Plant City, Florida 33566-2354 ☐ (813) 752-5014

NOMENCLATURE USED IN STACK SAMPLING CALCULATIONS (Continued)

Q = Stack gas flowrate, ACFM

Q_{std} = Stack gas flowrate, DSCFM

T_m = Absolute average meter temperature, °R

T_s = Absolute average stack gas temperature, °R

T_{std} = Standard absolute temperature, 528 °R

V_a = Volume of sample aliquot titrated, ml

V_{lc} = Liquid collected in impingers and silica gel, grams

V_m = Sample volume at meter conditions, DCF

$V_{m(std)}$ = Sample volume at standard conditions, DSCF

V_s = Stack gas velocity, ft/sec

V_{soln} = Total volume of solution, ml

V_t = Volume of barium perchlorate titrant used for the sample, ml

V_{tb} = Volume of barium perchlorate titrant used for the blank, ml

$V_{w(std)}$ = Volume of water vapor in sample corrected to standard conditions, SCF

Y = Dry gas meter calibration factor

13.6 = Specific gravity of mercury