MISSOURI STATE IMPLEMENTATION PLAN

Doe Run Resource Recycling Facility Near Bixby, Missouri

2000 Revision

Department of Natural Resources
Division of Environmental Quality
Air Pollution Control Program

P.O. Box 176
Jefferson City, Missouri 65102
Telephone: (573) 751-4817

MISSOURI STATE IMPLEMENTATION PLAN

Doe Run Resource Recycling Facility Near Bixby, Missouri

2000 Revision

Department of Natural Resources
Division of Environmental Quality
Air Pollution Control Program

P.O. Box 176
Jefferson City, Missouri 65102
Telephone: (573) 751-4817

TABLE OF CONTENTS

Table of Contents i

List of Tables iii

List of Figures iii

List of Appendices iii

Abbreviations iv

1.0 Introduction 1
- 1.1 Background 1
- 1.2 History of the Facility 4
- 1.3 Current Lead-producing Operations and Requirements 4
- 1.4 Ambient Air Boundaries at the Doe Run Resource Recycling Facility 4
  - 1.4.1 Land Ownership and Ambient Air 4
  - 1.4.2 Fencing to Restrict Public Access to Property 5

2.0 Description of Nonattainment Area 7
- 2.1 Location 7
- 2.2 Nonattainment Designation 7
- 2.3 Part D Lead Nonattainment SIP and Attainment Demonstration 7
  - 2.3.1 Emission Inventory and Air Dispersion Modeling 9
- 2.4 Revision to 10 CSR 10-6.120 10

3.0 Foundation for Redesignation 11
- 3.1 Attainment of the NAAQS (Summary of Air Quality Data) 11
- 3.2 Implementation of Controls 11
- 3.3 RACM and RACT Analysis 11
- 3.4 Current Control and Requirements 12
- 3.5 Additional Engineering Projects 13
- 3.6 2000 Consent Order 14

4.0 Maintenance Plan 15
- 4.1 Monitoring Network 15
- 4.2 Proposed Network Modification 15
- 4.3 Emission Inventory 20
  - 4.3.1 1997 Modeling Baseline Emission Inventory 20
  - 4.3.2 1997 Emission Inventory Calculations 20
- 4.4 Demonstration of Continued Attainment (modeling) 22
  - 4.4.1 Development of Dispersion Model Inputs 22
    - 4.4.1.1 Emissions Inventory 22

4.4.1.2 Topography 22
4.4.2 Model Input Development 22
4.4.3 10-Year Projections and Growth Assumptions 24
4.5 Annual Tracking and Inventory Updates 25
4.6 Contingency Plan 25
4.6.1 Requirements 25
4.6.2 Determination of Need to Implement Contingency Control Measures 25
4.6.3 Contingency Control Measures 25
4.7 Commitment to Submit Subsequent Maintenance Plan Revisions 26

5.0 Enforcement Condition Authority 27

6.0 Summary 28

7.0 References 29

TABLES

Table

1. Lead Ambient Air Quality Data - (1982-1999) 16

2. Doe Run 1992 vs 1997 Emission Inventory 21

3. Modeling Results 24

FIGURES

Figure

1. Lead Nonattainment Areas 3

2. Land Owned by Doe Run as of January 1, 1999 6

3. Dent Township Lead Nonattainment Area 8

4. Air Monitor Locations 19

APPENDICES

Appendix

A. Work Practice Manual 31

A.1 System Airflow Diagrams 39

A.2 Map of Street Washdown/Sweeping 46

A.3 Plant Operating Logs 48

B. Consent Order entered by the Missouri Air Conservation Commission with Doe Run. 55

C. Rule 10 CSR 10-6.120 Restriction of Emissions of Lead from Specific Lead Smelter-Refinery Installations 61

D. Emission Inventory Calculations 67

E. Process Flow Diagrams 70

F. Fugitive Emission Capture Proposal 82

G. Isopleth Maps 1987-1991 170

ABBREVIATIONS

BACT	Best Available Control Technology
CAAA	Clean Air Act Amendments of 1990
CFR	Code of Federal Regulations
CSR	Code of State Regulations
EPA	U. S. Environmental Protection Agency
MDNR	Missouri Department of Natural Resources
NAAQS	National Ambient Air Quality Standard
PSD	Prevention of Significant Deterioration
RACM	Reasonably Available Control Measures
RACT	Reasonably Available Control Technology
RFP	Reasonable Further Progress
SIP	State Implementation Plan
TSP	Total Suspended Particulate
$\mu g/m^3$	Micrograms per Cubic Meter

STATE IMPLEMENTATION PLAN FOR LEAD

1.0 Introduction

The purpose of this submittal is to provide background, data, and justification for redesignation of the nonattainment area in western Iron County, Missouri to attainment for lead. This document will be submitted to the Environmental Protection Agency (EPA) as a revision to the Missouri State Implementation Plan (SIP) along with the request for redesignation of this area.

Section 107(d)(3) of the 1990 Clean Air Act Amendments (CAAA) sets forth the process for redesignation and specifies that the Administrator may not promulgate a redesignation of a nonattainment area to attainment unless—

(i) The Administrator determines that the area has attained the national ambient air quality standard (NAAQS);
(ii) The Administrator has fully approved the applicable implementation plan for the area under section 110(k);
(iii) The Administrator determines that the improvement in air quality is due to permanent and enforceable reductions in emissions resulting from implementation of the applicable implementation plan and applicable Federal air pollutant control regulations and other permanent and enforceable reductions;
(iv) The Administrator has fully approved a maintenance plan for the area as meeting the requirements of section 175A and;
(v) The state containing such area has met all requirements applicable to the area under section 110 and part D.

This document addresses the section 107(d)(3) requirements for redesignation. It includes documentation of air quality data that the area has reached attainment of the NAAQS and verifies that this attainment is the result of the implementation of a control plan, which includes permanent and enforceable reductions.

This document also includes the maintenance plan, which is required by section 175A. The maintenance plan includes an emissions inventory, a maintenance demonstration and contingency measures. The maintenance plan projects future emissions, performs dispersion modeling, forecasts that there will not be an exceedance of the NAAQS.

1.1 Background

As a result of the 1990 CAAA, the EPA was authorized to designate nonattainment areas for lead for the first time since promulgation of the NAAQS for lead in 1978. On March 14, 1991, Governor Ashcroft requested that three areas in the state be designated as non-attainment for lead (as shown in Figure 1). The boundaries of these areas encompassed the three primary lead smelters that were operating in the state at that time. These

smelters included ASARCO Incorporated at Glover, the St. Joe Lead Company in Herculaneum, and the AMAX Lead Company of Missouri, in western Iron County near Bixby which is the current site of the Doe Run Resource Recycling Facility.

Figure 1 - Lead Nonattainment Areas

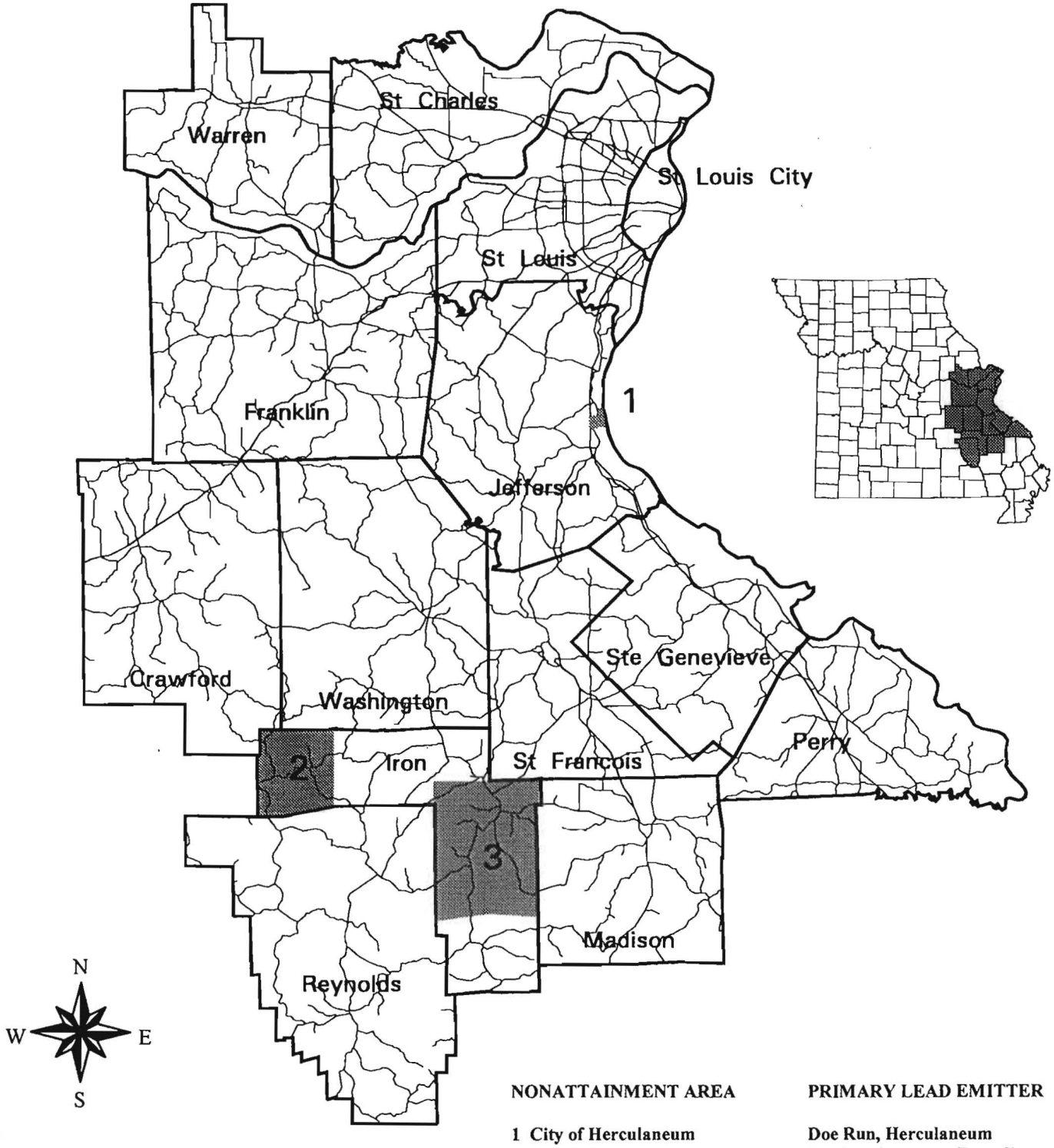

NONATTAINMENT AREA	PRIMARY LEAD EMITTER
1 City of Herculaneum	Doe Run, Herculaneum
2 Dent Township	Doe Run Resource Recycling
3 Liberty/Arcadia Townships	Doe Run, Glover

Missouri Departrment of Natural Resources
Division of Environmental Quality
Air Pollution Control Program

1.2 History of the Facility

The AMAX primary lead smelter near Bixby began smelting operations at this location in 1968. The smelter changed ownership in 1986 and Homestake Lead Company shut down operations on June 1, 1986 for business/market evaluation.

The lead operations of St. Joe Minerals formed a partnership with Homestake Lead and formed the Doe Run Company on November 16, 1986. Doe Run produced primary lead at the then named Buick facility through out 1987 and part of 1988. Violations of the NAAQS for lead were recorded in the first two calendar quarters of 1988. In the later part of 1988, Doe Run ceased operating the facility as a primary smelter. After 1988, various parts of the facility were operated intermittently to support production at Doe Run's primary smelter in Herculaneum, Missouri. Although air quality monitors indicated that ambient concentrations exceeded the 1.5 micrograms per cubic meter ($\mu g/m^3$) for some 24-hour periods, the quarterly lead standard was not violated during this intermittent operating scenario.

In 1990, Homestake sold its share of the operation to its partner, the lead operations of St. Joe Minerals. Then, in 1991, the Doe Run Company began the production of lead through secondary smelting and resource recovery. They continued to utilize various pieces of equipment which was associated with the primary operation in the secondary lead smelting operation.

1.3 Current Lead-producing Operations and Requirements

Currently, Doe Run is producing secondary lead at the Resource Recycling Facility. In 1998, the total production was 113,000 tons of lead bars and ingots. The facility has an operational limit through its operating permit of 140,000 tons per year. Approximately two-thirds of the material processed is vehicle and industrial batteries. The remaining processed material includes ballistic sand from firing ranges, lead-lined television screens, lead shielding from x-ray equipment, lead paint chips and other lead scrap generated from battery plants. The primary smelter sinter machine was removed in 1995, but Doe Run still uses the blast furnaces and the refinery facilities that were part of the original primary smelter.

1.4 Ambient Air Boundaries at the Doe Run Resource Recycling Facility

1.4.1 Land Ownership and Ambient Air

The physical extent of Doe Run's Resource Recycling facility is shown in Figure 2 as "Land Owned by Doe Run." This map shows an outline of property owned by Doe Run, delineated by a red line.

Prior to the 2000 Plan revision, Doe Run leased parcels of land from Cominco, the owner and operator of the Magmont lead mine on the adjoining property east of the Doe Run

Resource Recycling Facility.

Section 175A of the CAAA requires that the maintenance plan provide for maintenance of the lead NAAQS for at least ten (10) years after EPA's designation of attainment of the standard. Any changes in land boundaries will be reported to the Missouri Department of Natural Resources (MDNR) by Doe Run. A review of the land ownership change will then be made to determine whether a plan revision is needed.

1.4.2 Fencing to Restrict Public Access to Property

By U.S. EPA's definition of ambient air (40 CFR 50.1 (e)), public access must be restricted to smelter-owned or controlled property where there is potential for the lead NAAQS to be exceeded. Doe Run installed fencing to enclose the approximate area within the 1.5 ug/m^3 isopleth for 1993 secondary smelter operations.

At the time of this SIP revision, ambient air in the vicinity of the smelter is in compliance with the NAAQS for lead. No increase in fenced area is required, and fencing required by the 1993 SIP will remain.

Figure 2 - Land Owned by Doe Run

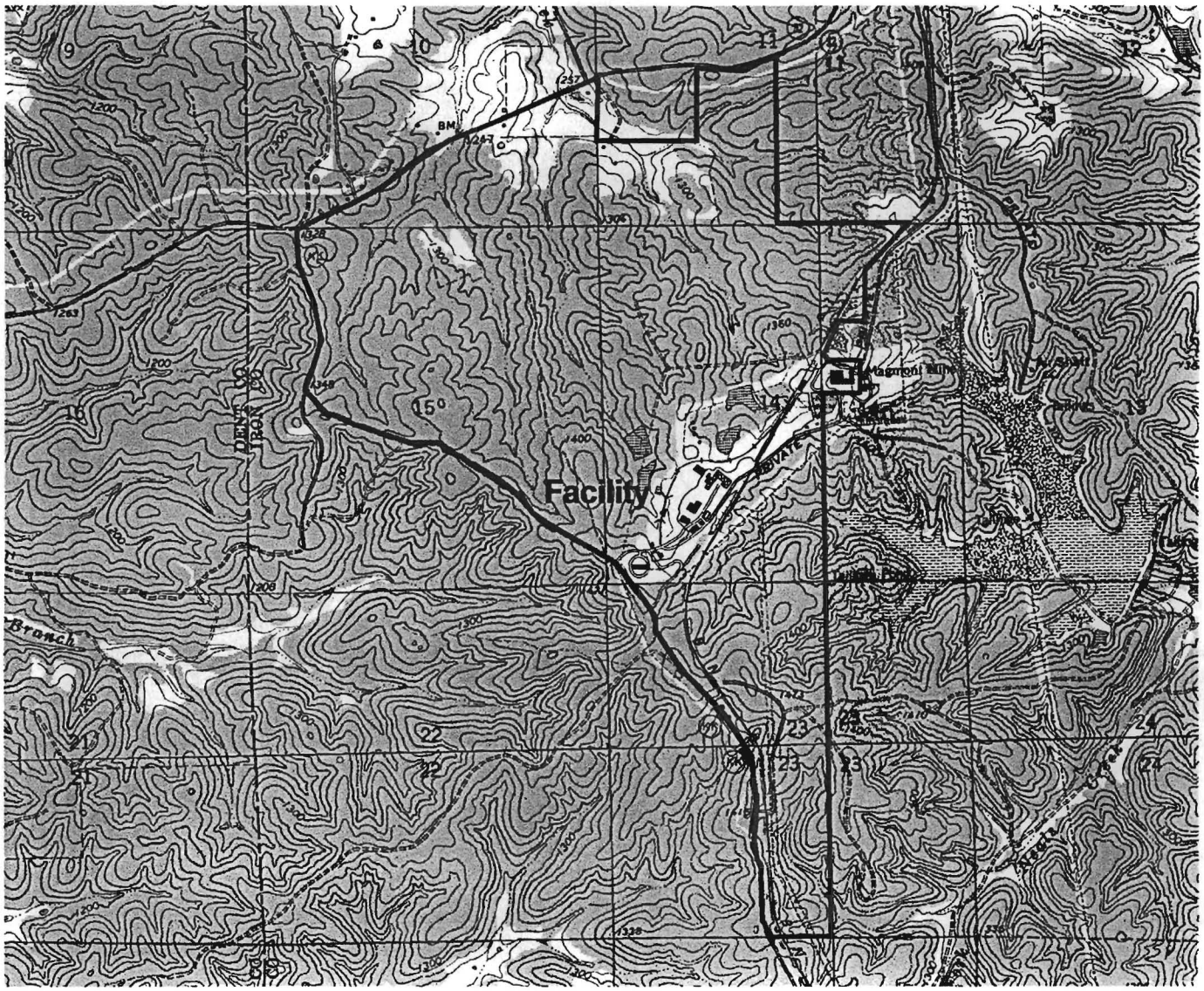

Land Owned by Doe Run

Highways

Rivers and Streams

Railroads

Missouri Department of Natural Resources
Division of Environmental Quality
Air Pollution Control Program

2.0 Description of Nonattainment Area

2.1 Location

The nonattainment area is defined by the boundaries of Dent township in western Iron County (See Figure 3). The Doe Run Resource Recycling Facility which is the major source of lead in this area is located in the southwest corner of the township. In the area, other sources of lead include several mines and a lead mill. The contribution to the lead emission inventory by non-smelting sources is included in the background concentration.

2.2 Nonattainment Designation

When the nonattainment boundaries were established in 1991, they were based on monitoring information, as no modeling information was available. The lead monitoring network around this smelter consists of four monitors – three north (#4, #5, and #6) and one south (#1) of the lead smelter. Only monitor #5 had shown an exceedance of the lead standard in the three years previous to the nonattainment determination (1988-1990). However, since the northern and eastern nonattainment boundaries were approximately 6.5 miles from the smelter, it was unlikely that they would be threatened by high concentrations of the heavy lead particles.

In 1991, when the nonattainment boundaries were selected, there was some concern about the south and west boundaries because the smelter is located near the southwest corner of the township. The monitor data from monitors #1 (south) and #6 (northwest) did not show high lead concentrations. Since no other data was available at that time, it was concluded that there were no violations of the lead standard occurring further west or further south of the nonattainment boundaries.

2.3 Part D Lead Nonattainment SIP and Attainment Demonstration

The CAAA requires states to bring lead nonattainment areas back into attainment with the lead NAAQS as expeditiously as practicable but no later than five (5) years from the area designation effective date of January 6, 1992. Section 191(A) of the CAAA required the state to submit a SIP revision to EPA by July 6, 1993.

In 1993 and 1994, a part D nonattainment SIP for Doe Run Resource Recycling Facility was developed by MDNR and adopted by the Missouri Air Conservation Commission (MACC). The Part D nonattainment SIP established control requirements for the secondary smelter operation and measures that would need to be implemented prior to the primary smelter resuming operation. As an additional measure, the rule amendment to 10 CSR 10-6.120 established enforceable emission and throughput limits for both the primary and secondary operations. The part D nonattainment SIP including the consent orders was approved as a revision to the Missouri SIP on August 4, 1995.

Figure 3 - Dent Township Lead Nonattainment Area

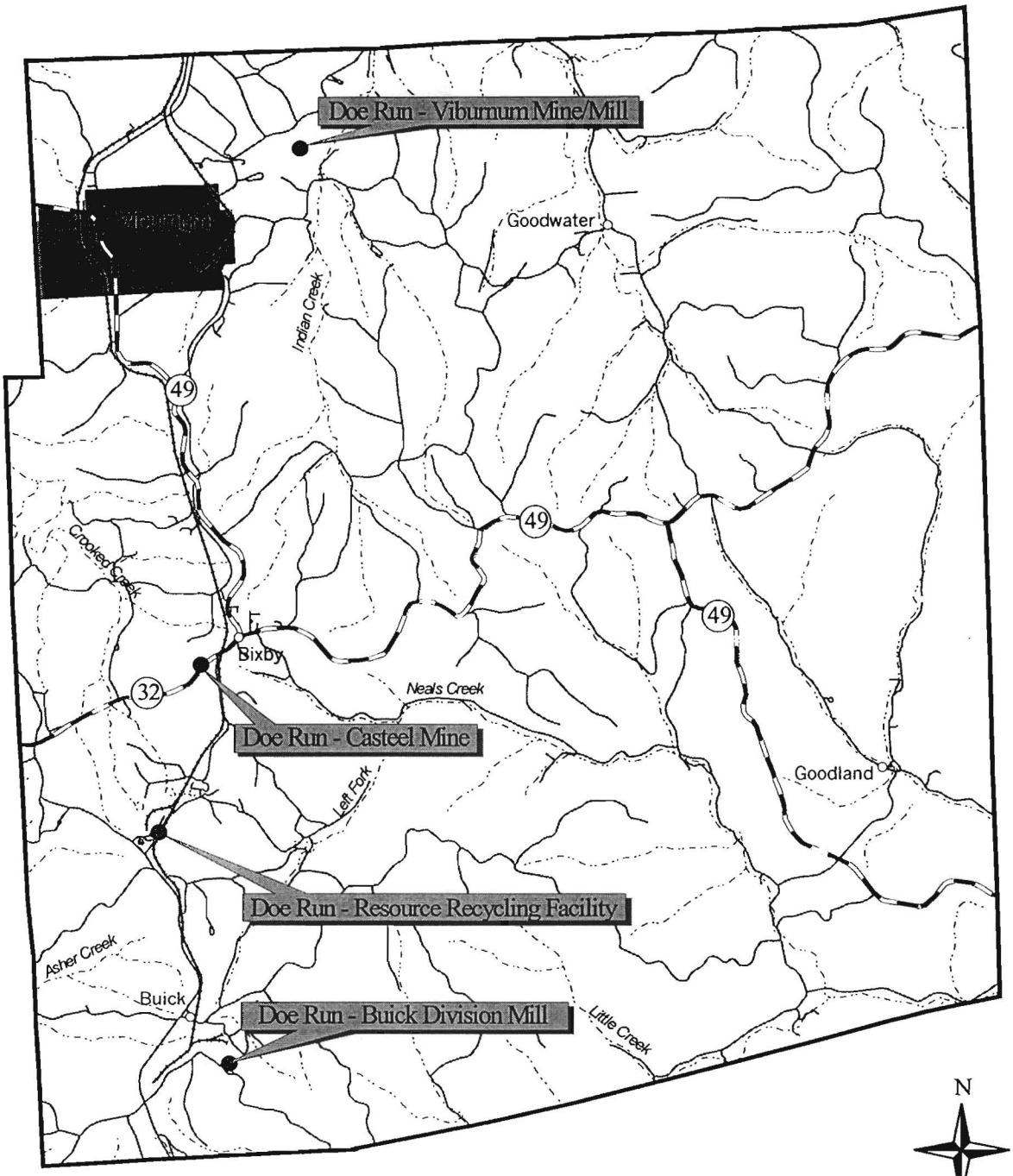

Grayed area represents extent of nonattainment location within Iron County, Missouri.

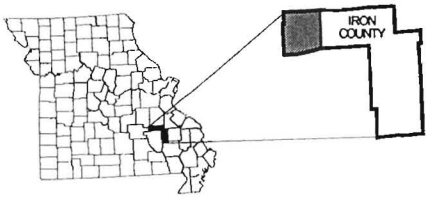

Missouri State Highways
Roads
Rivers and Streams
Railroads

0 1 2 Miles

EPA
REGION 7
ENSV DIVISION

NOTE: The Environmental Protection Agency does not guarantee the accuracy, completeness, or timeliness of the information shown, and shall not be liable for any loss or injury resulting from reliance upon the information shown.

DENT TOWNSHIP LEAD NONATTAINMENT AREA LAYOUT
C:\GIS_work\wo26599\wo26599.apr
Tue Jul 13 11:36:04 1999

The nonattainment SIP included:

1) A revision to rule 10 CSR 10-6.120 Restrictions of Emissions of Lead from Specific Lead Smelter-Refinery Installations which established enforceable throughput and emission point limits at the Doe Run Resource Recycling Facility.

2) A 1993 Consent Order signed by both Doe Run and MDNR which identified emission control projects that the Doe Run Resource Recycling Facility would need to complete prior to processing lead concentrate and producing primary lead. At this time the facility was operating as a secondary smelter and the primary process was on standby. The consent order also identified several emission control contingency measures to be implemented if the need was determined by MDNR based on ambient air quality data. In addition, other requirements relating to notification, access to smelter property, and testing were included as part of this order.

3) A 1994 Consent Order was signed and adopted by the MACC. This order, written as a modification to the 1993 order, replaced the original contingency control measures for the primary smelting process with four new emission control measures that provided sufficient reductions to satisfy the amended Part D requirements in the Clean Air Act. The four new contingency measures addressed operational processes and were designed to reduce fugitive emissions for the secondary process. These control measures would also be implemented if MDNR determined there was a need based on ambient air quality data.

2.3.1 Emission Inventory and Air Dispersion Modeling

Air dispersion modeling was used to determine that the controls established in the Part D nonattainment SIP for the Doe Run Resource Recycling Facility were sufficient to attain the lead NAAQS. The 1992 emissions inventory was developed and used as input data for the modeling analysis required for the attainment demonstration.

The Emission Inventory of 1992 was the baseline for the 1993 SIP Revision. This inventory was quantified through stack testing, personnel samplers for fugitive process emissions, evaluation of equipment and procedures, EPA emission estimation methods and engineering judgement. The emission rates were based upon a continuous production of primary lead at full throughput.

The Doe Run Company performed dispersion modeling using the EPA's ISC2 Long-Term Model, version dated 92273. The dispersion modeling projected the effect of control measures on the ambient air in the near vicinity of the smelter as related to the NAAQS for lead of 1.5 ug/m^3.

The modeling indicated that the maximum concentration for lead would be located north

of the smelter on the north side of Highway 32. After a background value of 0.15 ug/m^3 was added, the modeling determined that the maximum projected air quality value would be 0.86 ug/m^3. This value is below the NAAQS for lead of 1.5 ug/m^3. The background value was determined by examining the monitored values from the 3rd and 4th quarters 1986. During this time no smelting activities occurred. However, some minor activities including process cleanup and vehicle traffic took place. In light of the minor plant activity, the highest value from this period was assumed to represent a conservative and appropriate background level.

2.4 Revision to 10 CSR 10-6.120

On June 26, 1998, the MACC adopted an amendment to regulation 10 CSR 10-6.120 Restrictions of Emissions of Lead from Specific Lead Smelter-Refinery Installations. This revision removed language which allowed the Doe Run Resource Recycling Facility to resume operation as a primary smelter only.

The company retained the right to feed sinter from Doe Run's Herculaneum and Glover primary smelters. Sinter is the pure metallic lead product that results from removing the sulfide components of lead ore. This event would occur if there is an overflow of sinter at either of Doe Run's primary smelters or if there is a significant event impacting the refinery process of either primary smelter. In nether case could the Doe Run Resource Recycling Facility exceed the lead throughput or emission limits.

3.0 Foundation for Redesignation

3.1 Attainment of the NAAQS (Summary of Air Quality Data)

The nonattainment area near the Doe Run Resource Recycling Facility has shown compliance with the NAAQS for lead since the second calendar quarter of 1988. The last exceedance of the lead standard was a concentration of 1.75 $\mu g/m^3$ at monitor #5 which is located north of the facility (See Section 4.1 Air Quality Data).

3.2 Implementation of Controls

The Part D nonattainment SIP control strategy was fully implemented by Doe Run Resource Recycling Facility. In addition, the permanent closure of the primary lead smelting operation, controls on the secondary lead smelting operation, and the installation of reasonable available control technology (RACT) and reasonable available control measures (RACM) controls directly resulted in improvement of the air quality. The attainment of the lead standard is directly related to these permanent and enforceable reductions in emissions.

3.3 RACT and RACM Analysis

As part of the control requirements of the Part D nonattainment SIP submittal, provisions to ensure RACM (including RACT) were implemented. A 1991 RACT analysis to control point source emissions was conducted by Fluor Daniel, Inc. which evaluated the process technology, existing facilities and operating procedures.

Projects identified with this report that focused on the primary smelter operations (i.e. sinter feed systems) were not incorporated as the facility never resumed primary smelting operations after the report submittal.

Those projects that were not incorporated due to closure of the primary plant include the following:

- Installation of a pulse-jet baghouse in the sinter preparation area.
- Installation of a Redler conveyor to transport dust from the sinter preparation area to the baghouse.
- Installation of a dust collector for concentrate and sinter feed bins.
- Installation of a pulse-jet baghouse on the sinter feed machine and sinter handling equipment.
- Construction of an enclosure with a retractable door and water suppression system during sinter discharge.
- Replacement of sinter plant wall panels.
- Bullion transfer pot rotation procedure.

Projects identified and which were completed include the following:

- Installation of water sprays for open pile storage.
- Installation of building enclosures for bulk lead piles.
- Fabrication and installation of kettle covers in the dross and refinery plants.
- Installation of a temperature control system to reduce the baghouse temperature below the dew point.
- Ventilation provided for all kettle hoods to a baghouse system.
- Modification and enlargement of ductwork and tap hood at the blast furnace.

A RACM survey of both area and fugitive emissions was also conducted. Three of the fifteen RACM measures used in the survey were found to be applicable to the then named Buick facility. These applicable measures include:

1) requiring dust control for construction or land-clearing projects,
2) prohibiting permanent unpaved haul roads, and parking or staging areas at commercial, municipal or industrial facilities, and
3) requiring dust control measures for material storage piles.

In response to the identification of these measures, Doe Run incorporated formal written guidelines for construction and demolition projects into the work practices manual. The company paved or chemically stabilized all permanent haul roads, parking areas and staging areas with the exception of one employee parking lot. Doe Run also implemented a plan to enclose their materials storage into bins and bunkers. The secondary lead smelter maximum achievable control technology standard (MACT) required that all material storage piles be enclosed except for blast furnace slag.

By implementing these measures, Doe Run reduced their fugitive emissions by approximately 5 tons of lead/year. Further information regarding this data is included in the 1993 and 1999 emissions inventory questionnaires.

3.4 Current Controls and Requirements

Regulation 10 CSR 10-6.120, Restriction of Emissions of Lead from Specific Lead Smelter-Refinery Installations lists the following throughput limits:

Process Name	Throughput (tons per day)
Blast Furnace	1000 Charge
Reverb Furnace	360 Charge
Rotary Melt	240 Charge
Refinery	648 Lead Cast

This regulation also limits the emissions from the Main Stack at the Doe Run Resource Recycling Facility to 540 lbs of lead per 24 hour. Section (3) of this rule also requires the owner or operator of each specific lead smelting/refining facility to control fugitive emissions of lead from all process and area sources by measures described in a work practice manual. The current work practices manual for the Doe Run Resource Recycling Facility can be found in Appendix A. The current process flow diagrams with appropriate control points are attached in Appendix E.

Effective October 30, 1998, 10 CSR 10-6.120 was amended to remove all references for sinter plant emission limits. The RACT control measures were re-examined for applicability to current smelter operations. As a result, no process or operational changes were necessary for the SIP revision. The regulation's title and purpose were amended to reflect that the Doe Run Resource Recycling Facility was a secondary smelter as the regulation had previously applied to only primary smelter-refinery installations.

3.5 Additional Engineering Projects

Since 1993 Doe Run has implemented the following additional engineering projects to reduce lead emissions from the Resource Recycling Facility. Projects A and B were required to meet to the MACT standards recently promulgated for secondary lead smelting facilities.

A. Feed Storage Buildings - Construction and utilization of building enclosures for blast, reverberatory, and sweat furnace feed/screening processes. These enclosures significantly reduce fugitive lead emissions by keeping the emissions from each of the processes and storage piles confined within the building.

B. Bag Leak Detection Monitoring - Installation of a monitoring unit to detect broken or failed bags at the facility's main baghouse. This system provides real-time data readout at four different locations and includes visual and audible alarm systems.

Projects C, D and E were voluntarily implemented by Doe Run on a company initiated basis to improve operation efficiency and reduce lead emissions. None of these improvements were required by the 1993 SIP.

C. Corrective Action Cleanup - Cleanup of over 100,000 cubic yards of sludges and other lead bearing materials from several earthen impoundments. This cleanup reduced emissions by eliminating windblown exposure from these materials and paving access roads to the impoundments which further reduced airborne dust.

D. De-watering Screw Conveyors - Installation and utilization of three de-watering baths to water quench and screw convey the dry skimmings from the dross and refinery kettle operations, and the drosses generated from the rotary melter. This installation controlled lead emissions by processing the dry skimmings and drosses through water instead of dumping these products directly from the process

into a truck which created a dust cloud.

E. Tuyere Controls - Utilization of an air control system designed to regulate airflow through the bed of the blast furnace. This reduces the potential for unequal air pockets to form inside the furnace, which produced uncontrolled emissions from the front of the furnace. Installation and troubleshooting of this project was completed in late 1996. Based upon airborne data collected since this project was completed, a reduction in the number and severity of monitored "spikes" of airborne lead levels has been observed.

3.6 2000 Consent Order

This submittal includes the 1999 Doe Run Resource Recycling Facility consent order, Appendix B, which consolidates the applicable requirements of the past consent orders and address the current and future operations of the facility. This consent order contains the contingency control measures that would be implemented if MDNR determined there was a need based on ambient air quality data.

4.0 Maintenance Plan

4.1 Monitoring Network

Since 1982, Doe Run has operated a monitoring network which includes four hi-vol. ambient air lead monitors surrounding the Resource Recovery Facility. Three of the monitors are located in the northern forested sector of the smelter vicinity approximately three-quarters to one mile from the smelter and one monitor is located approximately three-quarters of a mile south of the smelter along Rt. KK. The locations of the monitors are shown in Figure 4. Each sampling quarter, Shell Engineering & Associates will perform a performance flow audit following the procedures used for a mass flow controller. The samplers are audited at their normal operating flow. The performance flow audit procedures are referenced in the Standard Operating Procedures for the Doe Run Resource Recycling Facility. In addition to conducting performance audits, Doe Run participates in systems audits that are performed by the Department. These systems audits are the responsibility of the Department and are performed by their personnel or a designated representative. Doe Run also participates in the EPA's National Performance Audit Program for sampler flows and filter analysis.

Table 1 lists the ambient air lead data from 1982 through 1999 for each of the four monitors. The monitors are owned, operated and maintained by the smelter. The smelter shall continue to operate an appropriate air quality monitoring network to verify the attainment status of the area.

4.2 Proposed Network Modification

The current monitoring network is proposed to be modified. Two monitors, the Short and Northwest, are proposed for removal since these monitors have consistently shown low ambient air concentrations. The maximum value monitored at these two stations since 1993 is 0.7 $\mu g/m^3$ of lead, or 47% of the 1.5 $\mu g/m^3$ standard.

The North and the South monitors, while not having a measured exceedance during the past 10 years, have had quarterly lead concentrations that approach the NAAQS limit. These monitors will remain in place and will be used to demonstrate continued attainment of the lead NAAQS during the 10-year demonstration and beyond.

Table 1.
LEAD AMBIENT AIR QUALITY DATA
DOE RUN RESOURCE RECYCLING FACILITY
CALENDAR QUARTERLY VALUES
in micrograms of lead per cubic meter of air (ug/m^3)

Date	#1 South	#4 Short	#5 North	#6 North W
1982				
3rd	1.69	1.80	1.19	.72
4th	.75	3.16	3.09	1.12
1983				
1st	.90	.82	.68	1.54
2nd	2.39	1.74	1.90?	1.21
3rd	.56	1.72	1.46	.91
4th	.39	.70	2.85	.33
1984				
1st	1.26	.99	1.26	1.10
2nd	2.21	.96	.85	.80
3rd	1.70	.49?	.98	.66
4th	.49	.65	.96	.25
1985				
1st	2.38	.56	.96	.54
2nd	2.09	2.19	1.80	.96
3rd	1.32	4.22	2.73	2.32
4th	.24	1.25?	1.12	.82
1986				
1st	1.85	1.49	3.29	.85
2nd	1.17	.95	.88	1.52
3rd	*	*	*	*
4th	.11	.15	.14	.10
1987				
1st	1.78	2.25?	1.23	2.96?
2nd	3.49	1.29	1.07	.94
3rd	2.02	2.96	1.26	2.33
4th	1.79	1.86	.35	.61
1988				
1st	1.52	.76	1.38	.38?
2nd	.68	.70	1.75	.74
3rd	.91	.98	.91	.44
4th	.66	1.00?	.80	.90?
1989				
1st	.39	.18	.31	.11
2nd	.52	.32	.47	.10
3rd	.63	.50	.35	.29
4th	1.16	.36	.44	.14

LEAD AMBIENT AIR QUALITY DATA
DOE RUN RESOURCE RECYCLING FACILITY
CALENDAR QUARTERLY VALUES
in micrograms of lead per cubic meter of air (ug/m^3)

Date	#1 South	#4 Short	#5 North	#6 North W
1990				
1st	.57	.21	.28	.17
2nd	.59	.17	.15	.11
3rd	.33	.29	.25?	.47?
4th	.52	.73	.81	.51
1991				
1st	1.08	1.10	1.29	.97
2nd	.60	.35?	.85	1.49
3rd	.38	.38	.17	.32
4th	.49?	.32	.68	.21
1992				
1st	.89	.38	.46	.41
2nd	.32	.46	.28	.78
3rd	.30	.26	.30	.12
4th	.51	.89	.63	.29?
1993				
1st	.44	.15	.13	.25?
2nd	.75	.65	.41	.35
3rd	.91	.53	.59	.23
4th	.77	.51	1.25	.23
1994				
1st	1.44	.74	.67	.27
2nd	1.27	.46	1.14	.35
3rd	.75	.49	.46	.35
4th	.79	.45	.52	.31
1995				
1st	.54	.42	.52	.40
2nd	.53	.46	.49	.46
3rd	.55	.39	.94	.54
4th	.66	.57	1.18	.10
1996				
1st	.84	.47	.83	.11
2nd	.73	.32	.50	.36
3rd	1.35	.34	.20	.29
4th	.42	.25	.78	.10

LEAD AMBIENT AIR QUALITY DATA
DOE RUN RESOURCE RECYCLING FACILITY
CALENDAR QUARTERLY VALUES
in micrograms of lead per cubic meter of air (ug/m^3)

Date	#1 South	#4 Short	#5 North	#6 North W
1997				
1st	.43	.24	.35	.18
2nd	.51	.54	.23	.47
3rd	1.00	.31	.29	.60
4th	.45	.32	.53	.42
1998				
1st	.78	.34	.42	.21
2nd	.60	.56	.62	.22
3rd	.71	.74	.31	.49
4th	1.14	.43	.30	.46
1999				
1st	.52	.41	.55	.13
2nd	.85	.20	.25	.24
3rd	.75	.20	.22	.42
4th				

Underlined Quarterly Air Quality Values exceed the (NAAQS) National Ambient Air Quality Standard for lead; the NAAQS for Lead is 1.5 ug/m^3 and is the arithmetic mean of a series of daily (24-hour) valves from hi-vol monitors measuring particulate matter, within a 3-month (calendar quarter) period.

Values followed by a question mark (?) indicate that the value does not satisfy monitoring requirements.

Values represented by an asterix (*) indicate that less than 75% of scheduled sampling days were collected.

Figure 4 - Air Monitor Locations

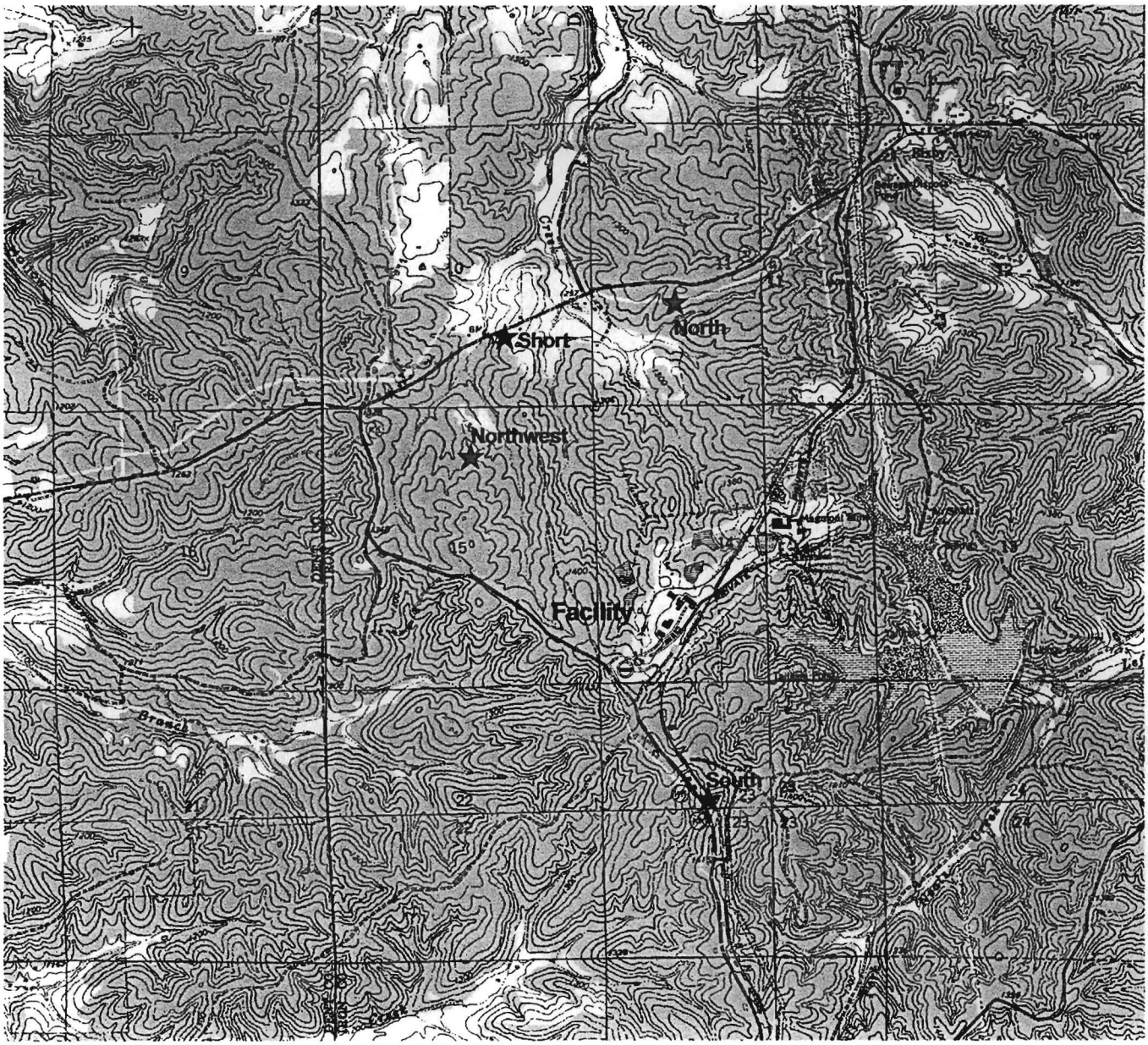

Air Monitors

Highways

Rivers and Streams

Railroads

Missouri Department of Natural Resources
Division of Environmental Quality
Air Pollution Control Program

4.3 Emission Inventory

4.3.1 1997 Modeling Baseline Emission Inventory

The lead smelter emission inventory was developed from numerous references and individual smelter inputs. Fugitive emissions were measured for each smelter process using the actual average process throughputs during the time that measurements were being made. Process emissions were based on the potential to emit using either the emission limits established in the SIP or from operating permits. These inventories show the high degree of control already existing at all point process, process fugitive and open fugitive emission sources in steady-state operation.

The 1997 Emission Inventory updates the 1992 Emission Inventory by eliminating several individual point sources that were removed from the plant following the 1993 SIP. The demolition of the sinter plant and removal of the sinter plant baghouse created the most significant change in emissions. Removal of these two sources reduced the Doe Run Resource Recycling Facility's potential to emit by over 1000 lbs of lead per day.

4.3.2 1997 Emission Inventory Calculations

The emission calculations (Appendix D) used either the SIP limits or the fugitive emissions measured at each process to calculate the lead emissions for the facility processes in both tons per year (tpy) and pounds per day (lbs/day). These values were then used as inputs for the air dispersion modeling analysis to estimate the lead emission impacts in the area surrounding the facility.

Table 2 lists each emission inventory point or area, the appropriate control device and the emissions for each in the 1992 inventory and 1997 inventory. The reason for each change is also described in the last column. The total reduction of potential emissions from 1992 to 1997 equals 1111.85 lbs/day or an equivalent of 202.9 tons/year. This significant emission reduction is mainly related to the closure of the sinter plant.

Table 2.
1997 Lead Emission Inventory

Emission Inventory (Point or Area) Number (EI No.)	Source Name	Control Device	1992 EI lbs/day	1997 EI Potential To Emit lbs/day	Reason for Change
1	#1 Scrubber	N/A	21.80	0.00	Removed Sinter Plant
2	#2 Scrubber	N/A	21.30	0.00	Removed Sinter Plant
3	#6 Scrubber	N/A	93.10	0.00	Removed Sinter Plant
4	#7 Scrubber	N/A	17.50	0.00	Removed Sinter Plant
5	#8 Scrubber	N/A	14.90	0.00	Removed Sinter Plant
6	#9 Scrubber	N/A	11.50	0.00	Removed Sinter Plant
7	Stack Crusher BH	N/A	17.50	0.00	Removed Sinter Plant
8	Main Stack	N/A	1080.90	540.00	Removed Sinter Plant
10	Blast Furnace Fugitives	N/A	27.95	2.18	New Sample
10A	Bag House Fumes	N/A	2.79	0.00	New Dust Agg. Furnace
11	Dross Plant Fugitives	N/A	17.50	1.08	New Sample
12	Refinery fugitives	N/A	27.90	2.90	New Sample
13	Conc. Unloading & Storage	N/A	4.38	4.38	No Change
14	Sinter Plant Fugitives	N/A	176.98	0.00	Removed Sinter Plant
16	Battery Brking Scrubber	Scrubber	0.10	0.10	No Change
17	Paste BH	Baghouse	0.01	0.01	No Change
29	Slag Tower	N/A	0.10	0.00	Ducted to Main Stack
31	Shredder BH	Baghouse	0.00	0.20	Not Modeled in SIP
35	Sinter Transfer	N/A	2.23	0.00	Removed Sinter Plant
36	Sinter Storage	N/A	13.13	10.20	Less Sinter Stored
37	On-Property Resuspension	N/A	112.00	25.70	RCRA Soil Clean Up
53	Screen	H2O Spray	0.00	0.01	Not Modeled in SIP
54	Dust Agglomeration	N/A	0.00	0.00	New Permit
63	Sweat Furnace	Baghouse	0.00	3.29	New Permit
		TOTAL	1702.2	590.25	

Conversion: lbs/day x (365/2000) = tons/year

4.4 Demonstration of Continued Attainment

4.4.1 Development of Dispersion Model Inputs

4.4.1.1 Emissions Inventory

The 1997 emission inventory, which was used as the baseline for the 1997 modeling analysis, was developed from numerous references and individual smelter inputs. Fugitive emissions were measured for each smelter process using the average process throughputs during the time that measurements were being made. This provides an accurate estimation of the actual fugitive potential to emit. The 1997 emission inventory reflects the reductions in lead emissions created by control measures and operational changes following the 1993 SIP.

4.4.1.2 Topography

The Doe Run Resource Recycling Facility is located at the top of a north-south oriented ridge in western Iron County, Missouri at an elevation of approximately 1450 feet above Mean Sea Level. The terrain surrounding the ridge is comprised of low, vegetated hills, with drainage valleys approximately 100 to 200 feet below the hillside. All surface runoff from the facility drains into a lined concrete impoundment.

The surface runoff water in the impoundment is treated using a three-stage water treatment process. The water is adjusted for pH, flows through a flocculent process that uses a coagulant, and then passes through a sand filter before it is released into Crooked Creek, a permanent stream flowing to the southeast.

4.4.2 Model Input Development

In January of 1997, Shell Engineering & Associates, on behalf of the Doe Run Company, submitted a modeling study in support of the Resource Recycling Facility's redesignation request. As submitted, the modeling procedures used in the study did not follow current air quality modeling guidelines. However, only minor changes were required to fulfill the recommendations described in 40 CFR Chapter 1 Part 51, Appendix W entitled "Guideline on Air Quality Models". These changes included the use of the most current version of the Industrial Source Complex Short Term (ISCST) Version 3 dated June 24, 1999. In addition, a number of the emission rates used in the original model were not based upon 365 days of operation per year. To correct this, the model was rerun using the emission rates contained in Section 4.3.2 of this plan. The revised modeling study is described in detail in the following paragraphs.

Current guidance states that the ISCST is the preferred air quality model for determining the maximum quarterly lead concentrations resulting from the operation of major lead sources. The ISCST Version 3 dated June 24, 1999, was used to evaluate the concentration of lead resulting from the operations at the Doe Run Resource Recycling

Facility. The ISCST Version 3 is based upon the Guassian plume equation and can be used to model point, area, volume, and open pit sources. The model allows for the input of multiple sources, terrain elevations, structure effects, various grid receptors, wet and dry depletion calculations, urban or rural terrain, and averaging periods ranging from one hour to one year.

At the Doe Run Resource Recycling Facility emissions of lead result from process fugitives, baghouses, storage, resuspension, and raw material screening. Table 2 entitled "1997 Lead Emission Inventory" contains the emission points and the emission rate input into the ISCST Version 3 model. All of the sources were modeled at their 1997 potential emissions. Emissions from open storage, sinter storage, and resuspension were allowed to vary by wind speed and stability class. Appendix D provides the calculations used to determine fugitive emissions.

In order to determine the maximum impact from the recycling center, a Cartesian grid of coarseness varying from 240 meter to 100-meter spacing was utilized. The grid extended 2400 meters in each cardinal direction from the main stack. Terrain elevations were included as elevated terrain exists in the vicinity of the source.

Because on-site meteorological data was not available, the five latest consecutive years of meteorological data were obtained from the EPA Support Center for Regulatory Air Models web page located at the following address http://www.epa.gov/scram001. The meteorological input files were developed using surface data from Springfield Regional Airport and upper air data from Monett WSMO for the years: 1987-91. An anemometer height of 20 feet was input into the model.

To account for building downwash, the Building Profile Input Program (BPIP) was utilized. The information needed to execute the BPIP are the heights and locations of structures that could contribute to building downwash, and the stack locations in relation to these structures. BPIP serves two main functions. The first function of the program is to determine if a stack is being subjected to wake effects from a surrounding structure or structures. Flags are then set to indicate stacks that are affected by structure wake effects. If a stack is influenced by a structure, then the second function of the program is executed. The second function calculates the building heights and widths to be included in the model-input file so that building downwash effects can be considered.

In order to determine compliance with the NAAQS for lead, a background value must be included in the maximum-modeled quarterly concentration to account for unidentified sources, nearby sources, and natural sources of lead in the vicinity of the source. For this project, a background value of 0.15 μ/m^3 was used. Table 3 contains the maximum quarterly lead concentrations, including background, as predicted by the ISCST Version 3 model. Appendix G contains isopleth maps that show the expected location of the highest lead concentration.

Table 3
Modeling Results**

	First Quarter	Second Quarter	Third Quarter	Fourth Quarter
1987	0.50924	0.55654	0.57375	0.58840
1988	0.61580	0.55895	0.55847	0.57787
1989	0.53957	0.55611	0.48059	0.54208
1990	0.61306	0.64924	0.51146	0.72409
1991	0.63871	0.67190	0.59505	0.71612

**All concentrations are in $\mu g/m^3$

The maximum concentration predicted by the model occurred during the fourth quarter of 1990 with a value of 0.72409 $\mu g/m^3$. Based upon the model results the facility is in compliance with the NAAQS of 1.5 $\mu g/m^3$. The variance in the modeling results does not indicate anything more than production fluctuations and meteorological influences. Currently, the emissions are limited to regulation, work practices, and consent decree. Doe Run would be required to conduct a Prevention of Significant Deterioration (PSD) permit review for the installation of any new equipment to increase capacity. Therefore, emissions are expected to remain consistent for the foreseeable future. This consistency satisfies CAAA section 175A requirements to maintain the air quality for a period of ten years following redesignation. Furthermore, the state of Missouri commits to submit to the EPA, eight years after redesignation, a SIP revision projecting maintenance of the NAAQS for an additional ten years.

In addition to modeling attainment, the source must submit eight quarters of clean air quality data. As shown in Table 1, the monitor network has not measured an exceedence of the NAAQS for Lead in over 40 quarters. The North and South monitors continue to have quarterly averages significantly higher than the model predicted concentrations. These averages occur infrequently, but still indicate the need for further monitoring at these sites.

4.4.3 10-Year Projections and Growth Assumptions

Currently, emissions are limited through regulation, work practices, and consent decree. To forecast the emissions for the next ten years, MDNR addressed the growth assumptions for the facility, the emissions inventory and examined production increases for the prior 5 years.

Doe Run estimates that the Resource Recycling Facility will increase potential production from 140,000 tpy to 175,000 tpy during the next ten years. Currently, the Doe Run Resource Recycling Facility is limited by permit to 140,000 tpy. Doe Run will be required to conduct a PSD permit review for the installation of any new equipment to increase capacity past the 140,000 tpy limit. A condition of granting such a permit is modeling the new potential emissions and showing that the new plant configuration will not exceed the allowable PSD increments.

A "global capture" system designed to reduce process fugitives and improve the environmental performance of the facility is scheduled to be finished May 2003 (See Appendix F.). This "global capture" system will provide additional emission reductions which will partially offset emission increases associated with the potential production increase. Therefore, the facility is expected to continue to stay in attainment with the ambient air quality standards for lead during the next ten years and beyond, which satisfies CAAA section 175A requirements. The state commits to amend the SIP to include the revised production limit and modeling if the Doe Run Resource Recycling Facility receives a PSD permit.

4.5 Annual Tracking and Inventory Updates

Doe Run's Resource Recycling Facility will continue to operate the ambient air monitoring network for lead as described previously. The Short and Northwest monitors are proposed to be removed which will leave the South and North monitors to record ambient air data for lead. Changes in production levels could lead to a re-evaluation of the adequacy of the monitor network.

Annual emission inventory questionnaires will be updated as necessary, and Doe Run will conduct compliance testing of the main stack at a minimum of every two years. If any exceedence of the lead standard is measured, the state will take action to enforce the contingency plan.

4.6 Contingency Plan

4.6.1 Requirements

This plan provides for specific "contingency" lead emission control measures in addition to controls or restrictions identified by 10 CSR 10-6.120 or the SIP. Should the smelter violate the standard following the attainment date herein, these contingency measures shall take effect without further action by the state (Part D, section 172(c)(9), CAAA).

4.6.2 Determination of Need to Implement Contingency Control Measures.

If the air quality data for the calendar quarter following the attainment date exceeds the NAAQS for lead, MDNR shall notify the smelter owner/operator of nonattainment and the maximum air quality value that exceeds the standard. Doe Run shall then implement the contingency control measures sixty (60) days from receipt of MDNR's notice.

4.6.3 Contingency Control Measures

The following contingency control measures shall be implemented when a violation of the NAAQS for lead is monitored:

1. Pave remainder of employee parking area north west of the administrative building.

2. Increase the frequency of facility roadway sweeping and washdown to two shifts daily.

3. Replace bags in main baghouse compartment #1 with teflon coated bags to improve ventilation capacity to the furnace process and process fugitives.

4. Replace compartment #8 bags in main baghouse with teflon coated bags the first full quarter following installation of compartment #1 bags if the standard has not been achieved.

The Contingency Measures listed above are included in a Consent Order for the Doe Run Resource Recycling Facility in Appendix B. This Consent Order replaces all earlier Consent Orders. It retains one contingency control measure from the previous Consent Order in amended form, and includes three new contingency control measures. Finally, the provisions for leased property was deleted from this Consent Order as Doe Run purchased the formerly leased land. The Consent Order will be submitted to EPA to be included in the Missouri SIP.

4.7 Commitment to Submit Subsequent Maintenance Plan Revisions

The state of Missouri commits to submit to the EPA, eight years after redesignation, a plan to project maintenance of the NAAQS for an additional ten years. A SIP revision will also be submitted if significant changes are projected for the facility that would affect the attainment status of the area. Significant changes could include a change in ambient air boundaries, a change in production or a change in ownership of the facility.

5.0 Enforcement Condition Authority

Legal authority for enforcement of the lead control strategy resides with the MACC under the existing Missouri Law RSMo 643 and the currently approved SIP. Point source controls are regulated by the existing Missouri regulation 10 CSR 10-6.120. New source construction is regulated by 10 CSR 10-6.060 and facility operation is regulated by 10 CSR 10-6.065. Control of malfunctions and upsets are regulated by 10 CSR 10-6.050.

The consent orders pertaining to The Doe Run Lead Company of Missouri as adopted pursuant to section 643.050.1(5), RSMo 1996, which provides that the MACC is empowered to:

> "Enter such order or determination as may be necessary to effectuate the purposes of sections 643.010 to 643.190. In making its orders and determinations hereunder, the commission shall exercise a sound discretion in weighing the equities involved and the advantages and disadvantages to the person involved and to those affected by air contaminants emitted by such person as set out in section 643.030. . . ."

The following sections of Missouri Law provide the enforcement condition authority to the MACC. These orders include requiring installation of equipment to reduce emission of air contaminants in order to attain and maintain the NAAQS for lead.

- Section 643.030, RSMo 1996, which provides that the discharge of air contaminants which cause or contribute to air pollution is contrary to the public policy and in violation of Chapter 643 RSMo.

- Section 643.190, RSMo 1996, which empowers the Air Conservation Commission to take all necessary or appropriate action to obtain the benefits of any federal air pollution control act

- Section 643.050.1(5) empowers the Air Conservation to issue orders necessary to effectuate approval of the SIP.

6.0 Summary

This action requests that the EPA change the designation of the Doe Run Resource Recycling Facility from nonattainment to attainment for lead. The state submits to EPA, a revision to the Missouri SIP for Lead addressing requirements necessary for the designation request. The SIP revision and designation request address the 1990 CAAA section 107(d)(3) requirements for redesignation and the section 175A maintenance plan requirements. The attainment demonstration satisfies the CAAA requirements by:

1) showing more than eight (8) consecutive quarters of air data without exceedence of the NAAQS for lead. The Dent Township nonattainment area has not had a monitored exceedence since 1988.
2) performing dispersion modeling based upon the 1997 emission inventory that did not forecast an exceedence of the NAAQS. The highest predicted value using the 1997 emission inventory was 0.725 $\mu g/m^3$.
3) implementing all RACT/RACM as part of the 1993/1994 SIP revision. Those controls provided enforceable and verifiable emission reductions that demonstrated attainment of the NAAQS for Lead.
4) showing air quality improvement that is permanent and enforceable. The 1993/1994 SIP revision established enforceable operating conditions that showed attainment of the NAAQS. This revision includes additional reductions that provide greater assurance of continued attainment and revises the contingency control measures.
5) containing a fully approved maintenance plan. Prior to or concurrent with a redesignation request, the state must have a fully approved maintenance plan as specified by section 175A. The maintenance plan contains the following elements:
   - Attainment Inventory - Shows that the current level of emissions has attained the NAAQS for Lead and confirms by monitored data, the area is in attainment. Lead emission inventory identifies the sources of lead used in the attainment demonstration.
   - Maintenance Demonstration - The maintenance demonstration shows that future emissions will not exceed the present inventory or it must show by modeling that any increase in emissions will not exceed the allowable PSD increments.
   - Monitoring Network - The state will continue to operate an appropriate air quality monitoring network to verify the attainment status of the area.
   - Verification of Continual Attainment - This demonstration shows that future emission inventories will not exceed the attainment inventory, or revised modeling demonstration.
   - Enforceable Contingency Measures - The Consent Order contains a list of contingency control measures that automatically become effective in the event of an exceedence of the NAAQS for lead.

7.0 REFERENCES

1. "Short-Term Lead Monitoring Plan in the Vicinity of Significant Point Sources", Final dated December 1979, based on EPA Guidelines.

2. "An Example Control Strategy for Lead", EPA-450/2-79-002, April 1979.

3. "Control Techniques for Lead Air Emissions", EPA-450/2-77-012, December 1977.

4. "Guideline for Lead Monitoring in the Vicinity of Point Sources", EPA-450/4-81-005, January 1981. (Rev. 7-82).

5. "Evaluation of Lead Emission Controls at the Doe Run Company's Buick Smelter" (near Bixby, Missouri), Fluor Daniel, Inc., June 1991, Volumes (projects) 1, 2, 3, 5, 7, 8 and 9.

6. "Technical Memoranda: Potential Lead Emission Reductions at the Buick Smelter", The Doe Run Company, February 1993.

7. "Baseline Modeling of the Buick Lead Smelter Using ISCLT 2 Model for Primary and Secondary Lead Smelter and Modeling Analysis Report Demonstrating the Effects of Potential Lead Emission Reductions at the Doe Run Company's Buick Smelter", Shell Engineering & Associates, Inc., June 1993, in two volumes.

8. "Modeling Analysis Report Demonstrating the Effects of Potential Lead Emissions from Current (1993) Lead Producing Conditions at the Doe Run Company's Buick Smelter", Shell Engineering & Associates, Inc., June 1993.

9. Froning, D., Technical Report to Doe Run Buick file on 1997 Buick modeling results, Missouri Department of Natural Resources, Air Pollution Control Program, January, 1998

10. 10 CSR 10-6.060 Permits Required (re: CAA Part D).

11. "RACT Analysis for the Buick Smelter", The Doe Run Company, April 1993.

12. "Work Practice Manual" for Buick Smelter, December 1998.

13. "A Report to the Community, The Doe Run Company, Resource Recycling Division/Buick Facility, 1995.

APPENDIX A.

WORK PRACTICE MANUAL

Work Practice Manual

Doe Run Resource Recycling Facility

Table of Contents

Item	Page No.
Purpose, Use and Change	36
Action to Prevent Excess Process Emissions	36
Blast Furnace	36
Refinery	37
Baghouse	37
Yard	37
Battery Breaking Area	38
Record Keeping-General	38
Suspension of Work Practices	38
Ventilation Survey	39
Capital Construction Projects	39

Work Practice Manual

Doe Run Resource Recycling Facility

Appendices

Appendix	Location/Usage	Page
A.1	System Air Flow Diagram	42
A.2	Plan Map of Street Washdown/Sweeping	48
A.3	Plant Operating Logs	50

DOE RUN RESOURCE RECYCLING FACILITY WORK PRACTICE MANUAL

PURPOSE, USE AND CHANGE

This manual is written to comply with the Missouri Air Conservation Commission Rule 10 CSR 10-6.120(3)(B)1. which requires that:

> The owner or operator shall prepare, submit for approval, and then implement a process and area-specific work practice manual that will apply to locations of fugitive lead emissions at the installation;

and 10 CSR 10-6.120(3)(B)2. which requires that:

> The manual shall be the method of determining compliance with the provisions of this subsection. Failure to adhere to the work practices in the manual shall be a violation of this rule.

Any change to the work practices in the manual requires prior written approval from the DNR director before any change becomes effective and goes into practice.

ACTION TO PREVENT EXCESS PROCESS EMISSIONS

Definitions:

> Accumulated materials: lead bearing particulate that has the potential to become easily re-entrained.
>
> Hose Down: to wet or reduce accumulated materials.
>
> Wetting: sufficient water to be used to ensure no visible emission immediately following hose down.

The following schedule of areas and frequencies of hose down to wet or reduce accumulated materials will be implemented. Hose down is to be practiced within the limits of protection of the employee from electrical shock and or protection of the equipment from electrical shorting.

BLAST FURNACE

The blast furnace feed floor operator will hose down the feed floor areas north and south of the charging slots once per shift on a daily basis to wet or reduce accumulated material during furnace operations.

The floor area in front of the blast furnace is to be hosed down once per shift on a daily basis to wet or reduce accumulated material during furnace operations.

Hose down will not be performed when weather conditions prohibit such activity due to slipping hazards created by ice formation or glazing of surfaces. These conditions can exist when the temperature is less than 35 degrees F or whenever the application of water results in the formation of ice, which could result in injury to personnel.

The department operating log will be used to record cleaning activities. Area personnel will record the date and the shift during which the work was performed.

REFINERY

Refinery dock floor will utilize a floor sweeper once per shift on a daily basis to reduce accumulated material.

Refinery department will hose down the kettle floor daily to reduce accumulated material.

Hose down will not be performed when weather conditions prohibit such activity due to slipping hazards created by ice formation or glazing of surfaces. These conditions can exist when the temperature is less than 35 degrees F or whenever the application of water results in the formation of ice, which could result in injury to personnel.

The department operating log will be used to record cleaning activities. Area personnel will record the date and the shift during which the work was performed.

MAIN BAGHOUSE

The main stack baghouse will use a screw conveyor to move captured dust back to the reverberatory and/or blast furnace for recycling purposes. Additionally, a dust agglomeration furnace will be utilized to smelt accumulated dust from the system via feed hopper and conveyor.

The concrete floor beneath the baghouse will be hosed down on a weekly basis to wet or reduce accumulated material.

Hose down will not be performed when weather conditions prohibit such activity due to slipping hazards created by ice formation or glazing of surfaces. These conditions can exist when the temperature is less than 35 degrees F or whenever the application of water results in the formation of ice, which could result in injury to personnel.

The department operating log will be used to record cleaning activities. Area personnel will record the date and the shift during which the work was performed.

YARD

Water truck and sweeper truck will wet and sweep those areas of plant that are accessible by the equipment on a daily basis (Monday through Friday schedule). See Appendix A.2, plant layout, for water/sweeper truck routes.

Truck watering may be suspended during any period when the temperature is less than 35 degrees F, or whenever the application of water results in the formation of ice which could result in injury to plant personnel.

The department operating log will be used to record cleaning activities. Area personnel will record the date and the shift during which the work was performed.

BATTERY BREAKING AREA

Sweeper truck will sweep those areas of the Battery Breaking Area that is accessible by the equipment once per shift on a daily basis (Monday through Friday schedule).

The department operating log will be used to record cleaning activities. Area personnel will record the date and the shift during which the work was performed.

RECORD KEEPING-GENERAL

Records will be maintained of regularly scheduled quarterly inspections made by the environmental department of fugitive emissions such as hoods, airducts and exhaust fans.

The attached forms will be used to document watering/cleaning activities. Additionally, daily pre-shift safety inspections on mobile equipment used in these activities will serve as part of the recordkeeping function. Records will be maintained in the office of the maintenance schedule planner.

Any suspension of work practices (i.e. due to weather conditions) will also be noted in the operating logs.

SUSPENSION OF WORK PRACTICES

A. Adverse Weather

The work practices that use the application of water as described herein may be suspended whenever the application of water results in the formation of ice which could result in injury to plant personnel.

B. Equipment Maintenance and Repair

Sweeping and application of water may also be suspended during those periods

necessary to perform maintenance and repairs of equipment essential to the respective activity. Any maintenance and repair work shall be completed as soon as possible, and upon completion, the respective activity shall be immediately resumed in accordance with the stated practice.

C. Suspension of Production Operations

In the event that department production operations are suspended and shutdown, sweeping and watering applications in the department may be suspended for the duration of such period until normal operations are resumed. Any suspension of work practices (i.e. due to weather conditions) will also be noted in the weekly/monthly records.

D. Recordkeeping of Suspension of Work Practices

The department operating log will be used to record any suspension of work practices. The entry shall include the date of suspension, the reason and the date work practice is reinstated.

VENTILATION SURVEY

The plant ventilation systems listed in the appendices will be surveyed quarterly.

All measurements will be compared with previous quarters to determine need for attention.

Systems air flow diagrams are contained in Appendix A.1.

CAPITAL CONSTRUCTION PROJECTS

1. Prevention of fugitive dust shall be a consideration in the planning of construction projects.

2. Where feasible, old building components will be cleaned by either vacuum or water hose prior to removal. Additional power washing may be performed, once the component has been removed to an area where electrical shock or shorting of existing equipment can be avoided.

3. Where feasible, in-house water and sweeper trucks shall be used during construction projects to address dirt disturbed by trucks.

4. Water hoses/water sprays shall be used to address potential dust emissions during excavations should specific site conditions require such use.

5. Excavated materials shall be managed to minimize dust blowing. Examples include

wetting with water hoses, surface treatment with dust binders, tarping for small and/or temporary piles and establishment of vegetation for long standing piles.

Appendix A.1

SYSTEM AIR FLOW DIAGRAMS

VENTILATION SYSTEMS	PAGE
BDC Scrubber	6
BDC Scrubber	7
Paste Handling Baghouse	8
Reverb Furnace/Dross Area Baghouse	9
Refinery Area West Baghouse	10
Refinery Area East Baghouse	11

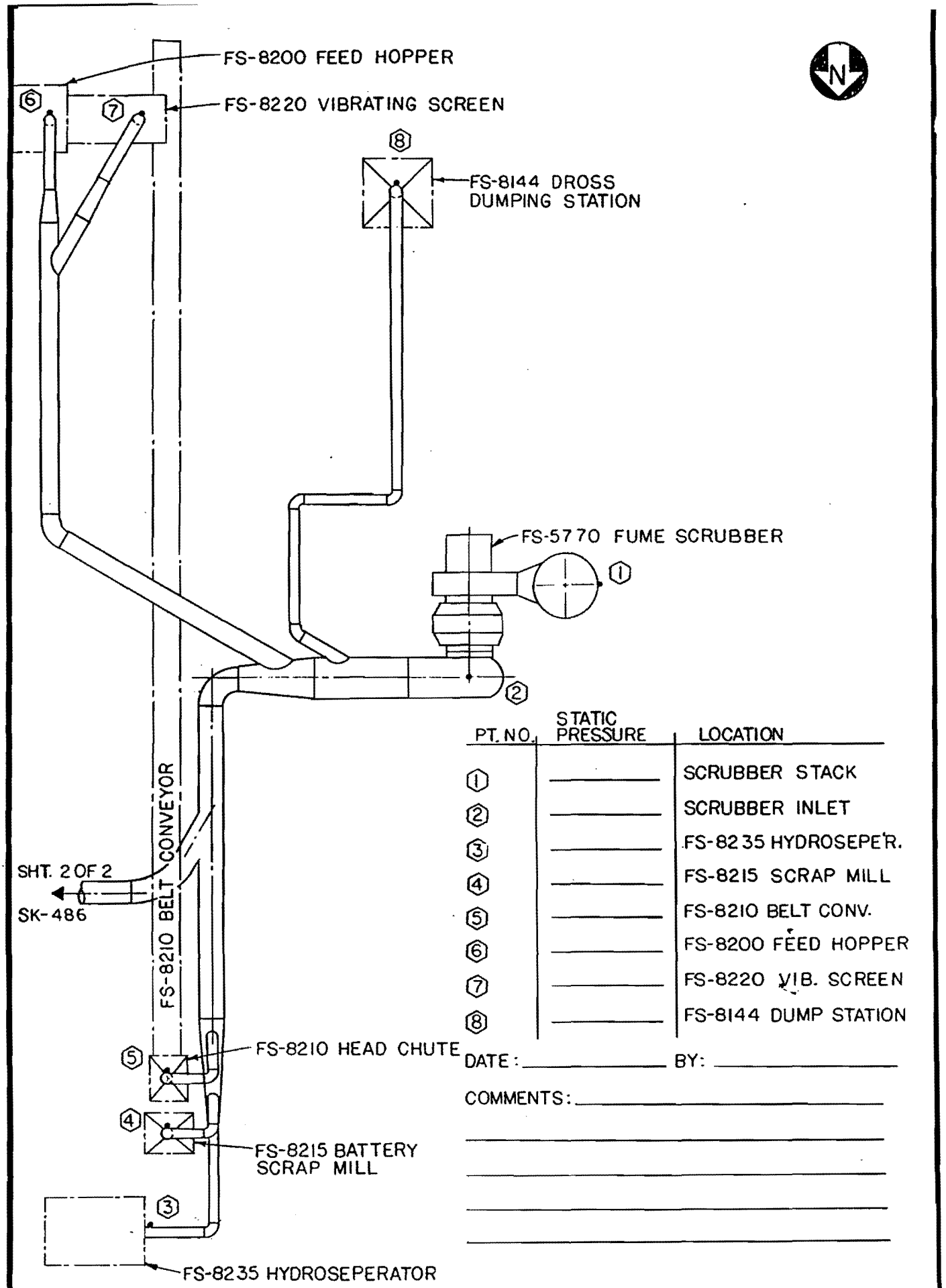

THE DOE RUN COMPANY

BUICK RESOURCE RECYCLING FACILITY

B.D.C. VENTILATION SURVEY

1 OF 2

DWN. MB DATE 1-92

SCALE –

NO. SK-485

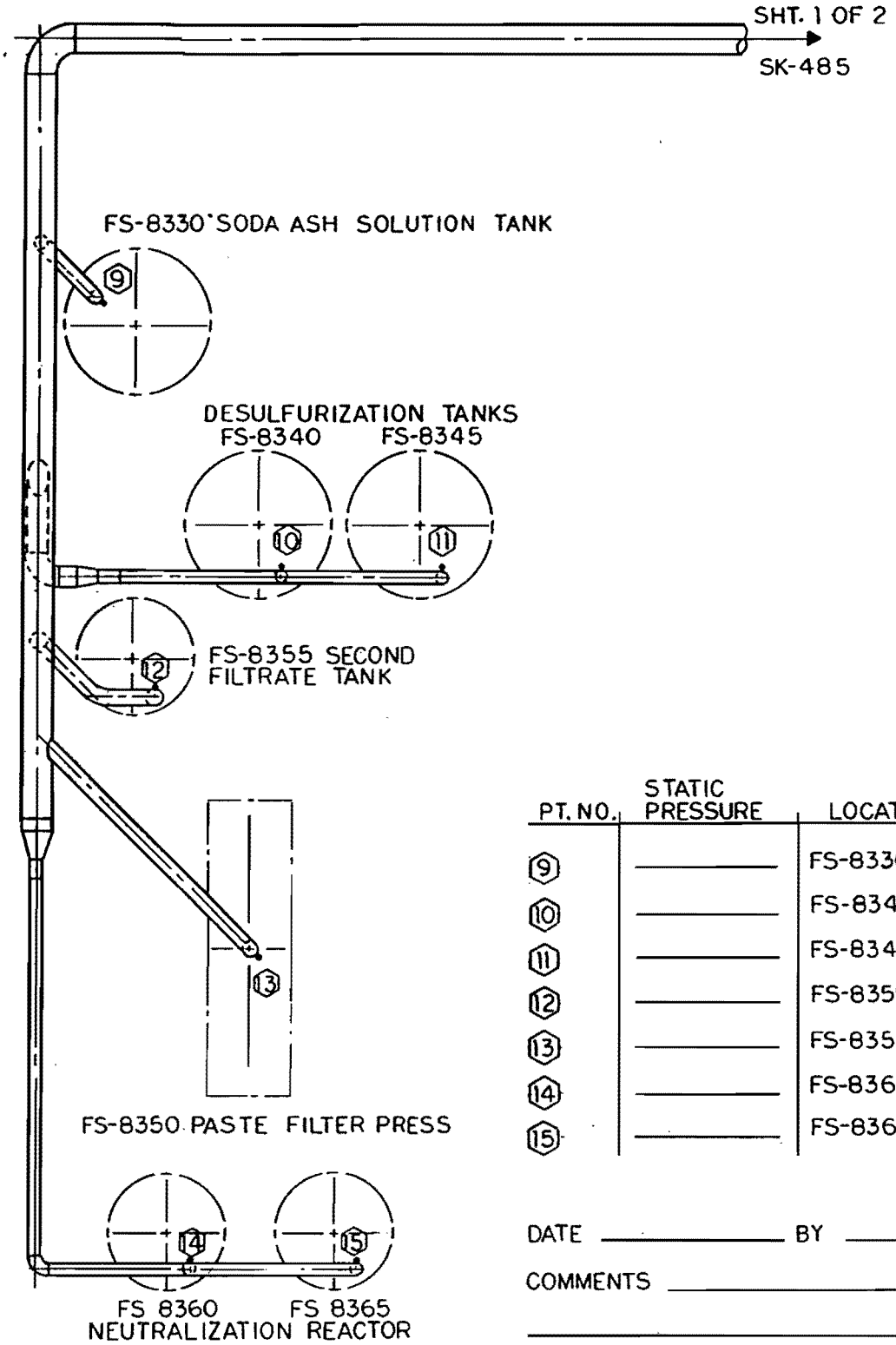

PT. NO.	STATIC PRESSURE	LOCATION
9		FS-8330 SOLUTION TANK
10		FS-8340 DESUL. TANK
11		FS-8345 DESUL. TANK
12		FS-8355 FILTRATE TANK
13		FS-8350 FILTER PRESS
14		FS-8360 NEUT. REACTOR
15		FS-8365 NEUT. REACTOR

DATE _____ BY _____

COMMENTS _____

THE DOE RUN COMPANY BUICK RESOURCE RECYCLING FACILITY	B.D.C. VENTILATION	2 OF 2	DWN. MB DATE 1-92 SCALE – NO. SK 486

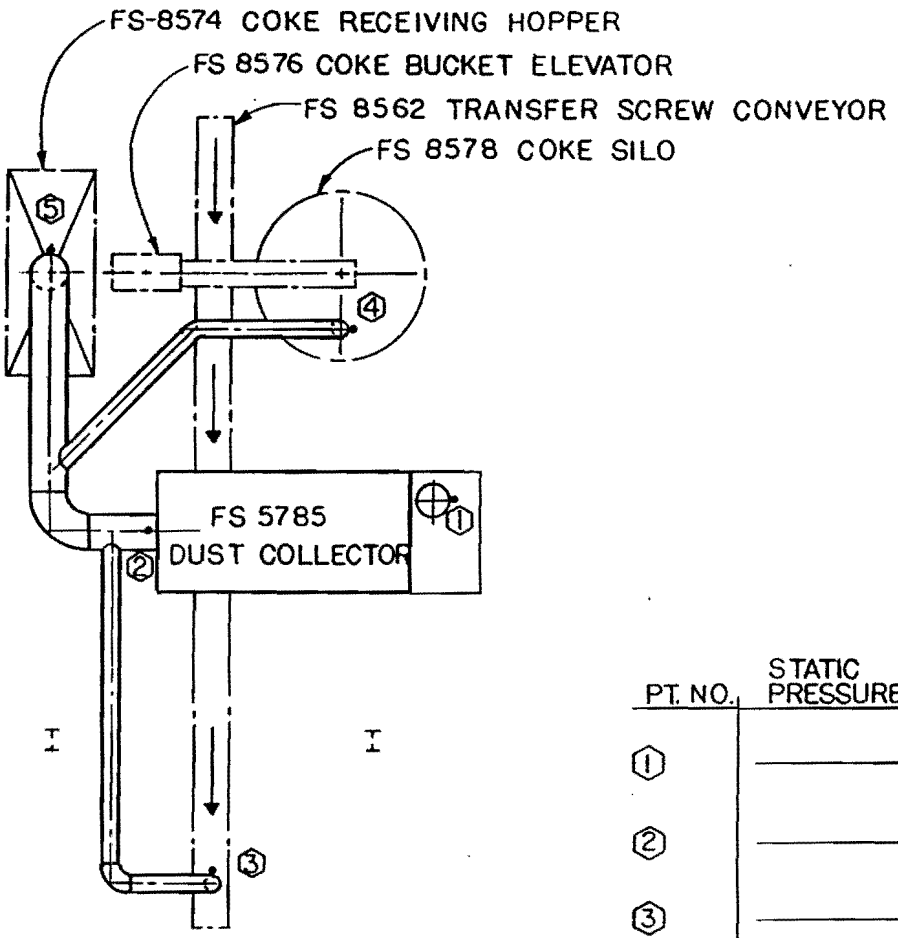

PT. NO.	STATIC PRESSURE	LOCATION
1	_____	COLLECTOR STACK
2	_____	COLLECTOR INLET
3	_____	FS-8562 SCREW CONV.
4	_____	FS-8578 COKE SILO
5	_____	FS 8574 COKE HOPPER

DATE: _____ BY: _____

COMMENTS: _____

THE DOE RUN COMPANY BUICK RESOURCE RECYCLING FACILITY	PASTE HANDLING VENTILATION SURVEY	DWN. MB DATE 1-92 SCALE -

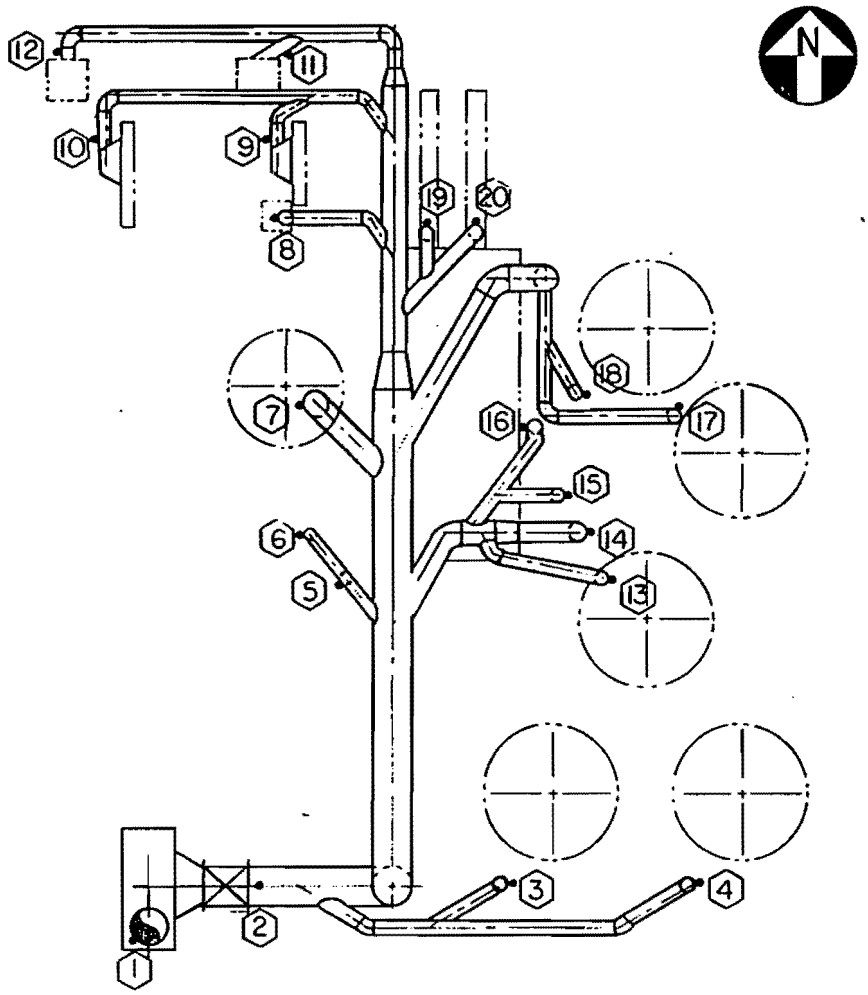

PT. NO.	STATIC PRESSURE	LOCATION	PT. NO.	STATIC PRESSURE	LOCATION
1	———	FS-5832 DUCT OUTLET	11	———	FS-3857 WEIGH SCREW FEEDER
2	———	FS-5832 DUCT INLET	12	———	FS-3854 BIN
3	———	FS-3300 KETTLE	13	———	FS-3310 KETTLE
4	———	FS-3301 KETTLE	14	———	FS-3883 LEAD LAUNDER
5	———	FS-3884 SLAG TAP	15	———	FS-3885 LEAD TAP
6	———	FS-3884 SLAG LAUNDER	16	———	FS-3885 REVERB FCE RABBLE DOOR
7	———	FS-3887 SLAG CASTER	17	———	FS-3311 KETTLE
8	———	FS-3866 COKE CHARGE BALANCE BIN	18	———	FS-3302 KETTLE
9	———	FS-3857 WEIGH SCREW FEEDER	19	———	FS-3874 RAM FEEDER
10	———	FS-3880 WEIGH SCREW FEEDER	20	———	FS-3873 RAM FEEDER

DATE: BY: COMMENTS:

THE DOE RUN COMPANY

BUICK RESOURCE RECYCLING FACILITY

REVERB FURNACE AND DROSS AREA VENTILATION SURVEY

DWN. MB DATE 2-92

SCALE –

NO. SK-488

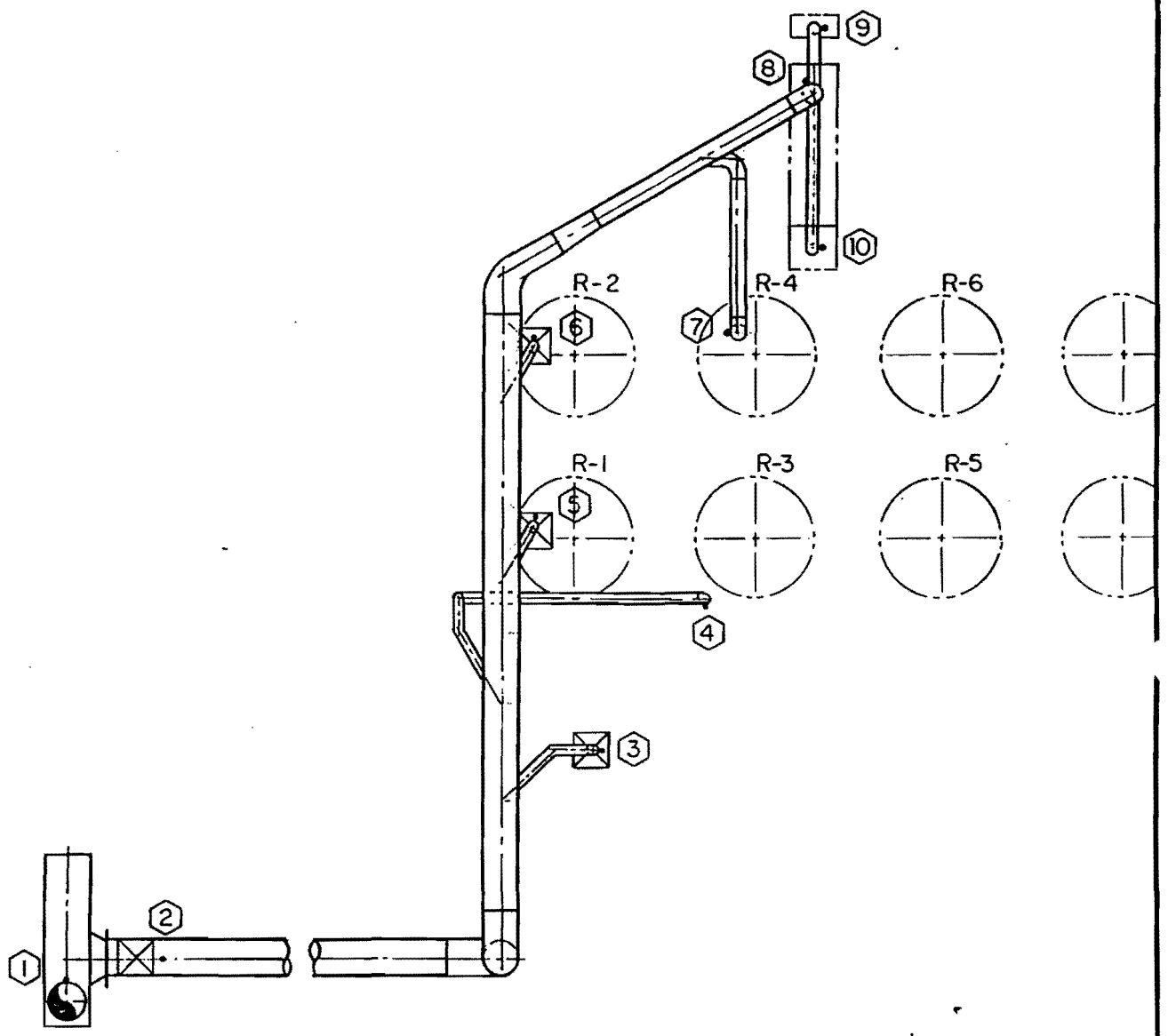

PT. NO.	STATIC PRESSURE	LOCATION	PT. NO.	STATIC PRESSURE	LOCATION
1	_____	FS-5872 DUCT OUTLET	5	_____	FS-4000 KETTLE
2	_____	FS-5872 DUCT INLET	6	_____	FS-4012 KETTLE
3	_____	FS-4840 DROSS DUMPING STATION	7	_____	FS-4010 KETTLE
4	_____	FS-4011 KETTLE	8	_____	FS-4820 ROTARY MELTER
9	_____	FS-4810 HEAD CHUTE	10	_____	FS-4820 DISCHARGE HOOD

DATE: _____ BY: _____ COMMENTS: _____

THE DOE RUN COMPANY BUICK RESOURCE RECYCLING FACILITY	REFINERY AREA - WEST VENTILATION SURVEY	DWN. MB DATE 2-92 SCALE — NO. SK-480

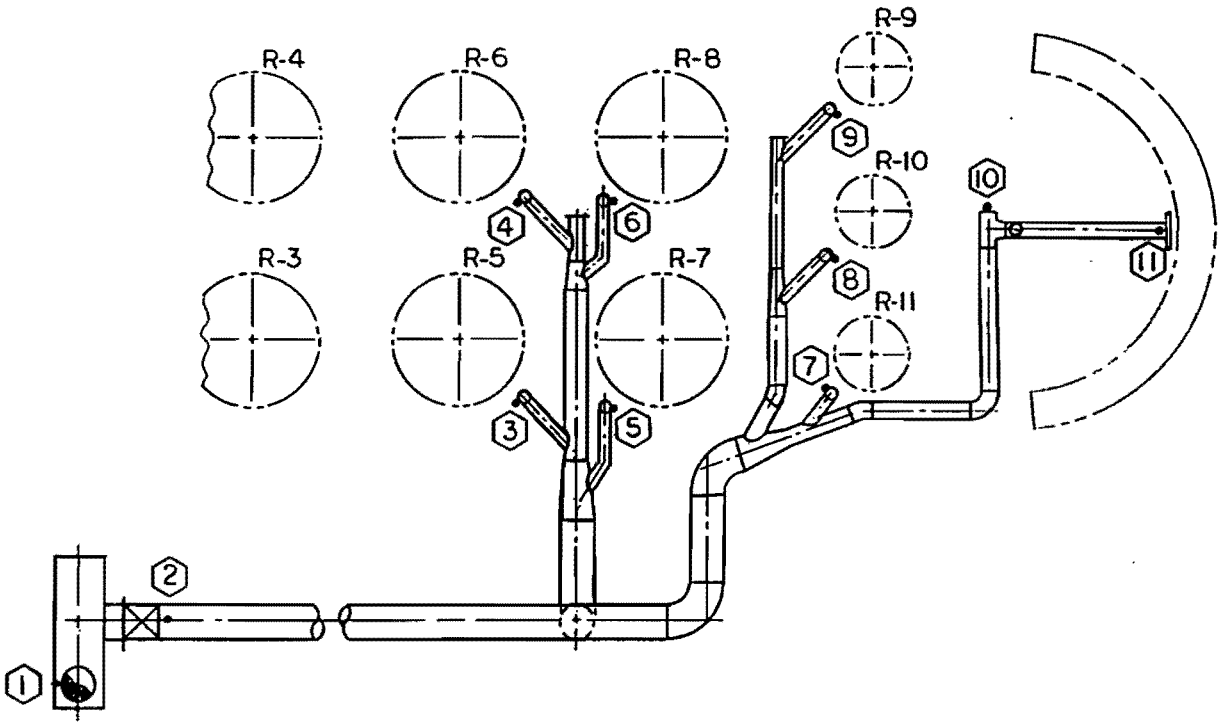

PT. NO.	STATIC PRESSURE	LOCATION	PT. NO.	STATIC PRESSURE	LOCATION
1	_____	FS-5870 DUCT OUTLET	7	_____	FS 4048 KETTLE
2	_____	FS-5870 DUCT INLET	8	_____	FS-4046 KETTLE
3	_____	FS-4030 KETTLE	9	_____	FS-4044 KETTLE
4	_____	FS-4020 KETTLE	10	_____	FS-4080 1 TON CASTING MACH. PIVOT PT.
5	_____	FS-4041 KETTLE	11	_____	FS-4080 1 TON CASTING MACHINE
6	_____	FS 4040 KETTLE			

DATE:_____ BY:_____ COMMENTS:_____

THE DOE RUN COMPANY BUICK RESOURCE RECYCLING FACILITY	REFINERY AREA – EAST VENTILATION SURVEY	DWN. MB DATE 2-92 SCALE – NO SK-490

Appendix A.2

PLAN MAP OF STREET WASHDOWNS/SWEEPING

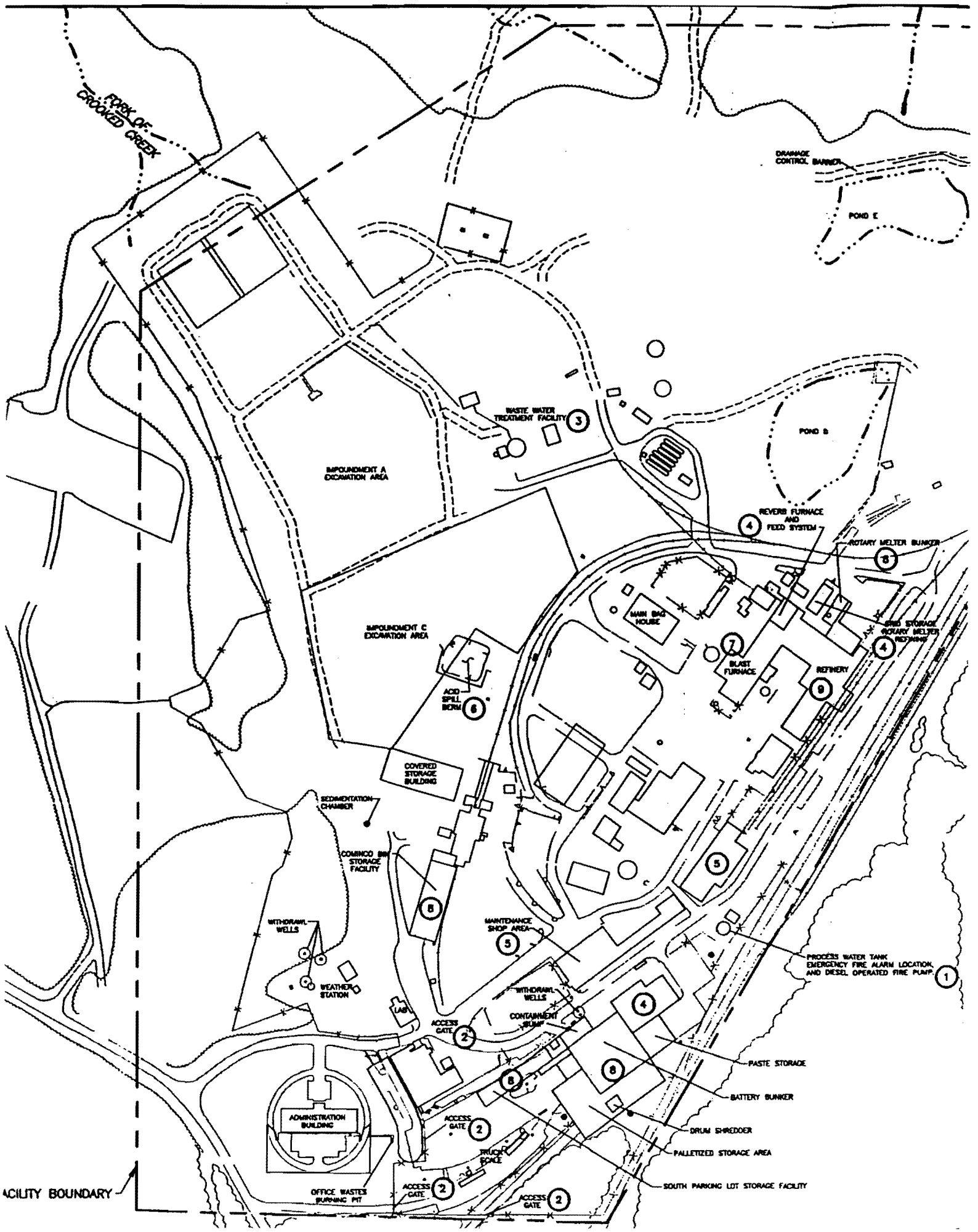
FORK OF CROOKED CREEK
DRAINAGE CONTROL BARRIER
POND E
WASTE WATER TREATMENT FACILITY
3
POND B
IMPOUNDMENT A EXCAVATION AREA
REVERB FURNACE AND FEED SYSTEM
4
ROTARY MELTER BUNKER
8
IMPOUNDMENT C EXCAVATION AREA
MAIN BAG HOUSE
BAG STORAGE ROTARY MELTER REFINING
4
7
BLAST FURNACE
REFINERY
9
ACID SPILL BERM
6
COVERED STORAGE BUILDING
SEDIMENTATION CHAMBER
COMINCO BAG STORAGE FACILITY
8
5
WITHDRAWL WELLS
MAINTENANCE SHOP AREA
5
PROCESS WATER TANK EMERGENCY FIRE ALARM LOCATION AND DIESEL OPERATED FIRE PUMP
1
WEATHER STATION
WITHDRAWL WELLS
LAB
CONTAINMENT SUMP
ACCESS GATE
2
4
PASTE STORAGE
8
8
BATTERY BUNKER
ADMINISTRATION BUILDING
ACCESS GATE
2
DRUM SHREDDER
TRUCK SCALE
PALLETIZED STORAGE AREA
SOUTH PARKING LOT STORAGE FACILITY
OFFICE WASTES BURNING PIT
ACCESS GATE
2
ACCESS GATE
2
ACILITY BOUNDARY

Appendix A.3

PLANT OPERATING LOGS

SWEAT FURNACE LEAD
PRODUCTION REPORT

DATE: _____

	TOLL	DOERUN
LEAD LBS	_____	_____
BLOCKS	_____	_____
DROSS LBS	_____	_____
ASH LBS	_____	_____

DROSS = + 70% LEAD
ASH = LESS THAN 70% LEAD

DUST FURNACE

725 LB. AVERAGE
X _____ MOLDS
TOTAL WEIGHT

Cable Strips received_____

Cable Strips processed_____

Floor Cleaning a.m. ☐ p.m. ☐

REFINERY SHIF. JPERATIONS LOG

DATE: 7 A.M. KETTLE INVENTORY SOFT_____ HARD_____

R1	R2	R3	R4	R5	R6

R7	R8	R9	R10	R11

ALLOY ADDS:
ANTIMONY
ALUMINUM
ARSENIC
COPPER
CADMIUM
CALCIUM
CAUSTIC
LIME
NITER
PHOS
POTASH
SELENIUM
SODIUM
SULFUR
TIN
ZINC
CHARCOAL

LEAD OXIDE USED # OF BAGS _____

REFINERY DROSS OUT # _____

Sb SLAG # _____

RE-MELT HERKY BLOCKS # _____

RE-MELT - NO SPEC. _____

PE Lead Cable Strip Treated In D-1 _____

Floor Cleaning ***a.m.*** ☐ ***p.m.*** ☐

Tennant Sweeper Truck (optional) ***a.m.*** ☐ ***p.m.*** ☐

PRODUCTION	Product #	Lot #	Bundles/Blocks	Pieces	Pounds	Tons	Product

THE DOE RUN COMPANY
RESOURCE RECYCLING DIVISION
Buick Facility

DATE: _____

BLAST FURNACE DAILY LEAD POT REPORT

DAY SHIFT (TIME)	NIGHT SHIFT (TIME)
1. _____	1. _____
2. _____	2. _____
3. _____	3. _____
4. _____	4. _____
5. _____	5. _____
6. _____	6. _____
7. _____	7. _____
8. _____	8. _____
9. _____	9. _____
10. _____	10. _____
11. _____	11. _____
12. _____	12. _____
13. _____	13. _____
14. _____	14. _____
15. _____	15. _____
16. _____	16. _____
17. _____	17. _____
18. _____	18. _____
19. _____	19. _____
20. _____	20. _____

Floor Cleaning *a.m.* ☐ *p.m.* ☐

REVERB CHECK LIST TO BE PERFORMED EACH SHIFT

DATE	TIME	INITIALS
1. CHECK BOLTS IN WEIGHFEEDERS & HYDRAULIC LEVELS.	1.	1.
2. CHECK BOLTS IN STORAGE BINS & HYDRAULIC LEVELS.	2.	2.
3. CHECK FEED OVERFLOW CHUTE ON MAIN FEEDSCREW.	3.	3.
4. CLEAN & CHECK SONIC SPRAYS.	4.	4.
5. CLEAN 90 ELBOW ON SONIC DUCT.	5.	5.
6. CLEAN DROP CHUTES ON SONIC DAY, ON DAY SHIFT.	6.	6.
7. CLEAN THE OLD LOUVER SPOT.	7.	7.
8. CHECK OIL LEVELS IN NORTH & SOUTH AIR COMPRESSORS.	8.	8.
9. CHECK BAGHOUSE DRAFT & CLEAN BUCKET ELEVATOR AT LEAST 4 TIMES EACH SHIFT	9. ◊ _____ ◊ _____ ◊ _____ ◊ _____	9. ◊ _____ ◊ _____ ◊ _____ ◊ _____

RECORD DROSS PLANT KETTLE TEMPERATURE EVERY 2 HOURS

TIME & TEMPERATURE

DATE:

KETTLE	7:00 A.M.	9:00 A.M.	11:00 A.M.	1:00 P.M.	3:00 P.M.	5:00 P.M.	7:00 P.M.	9:00 P.M.	11:00 P.M.	1:00 A.M.	3:00 A.M.	5:00 A.M.
D-1												
D-2												
D-3												
D-4												
D-5												
INITIALS												

ON D-2 KETTLE STATE YES OR NO FOR FIRE

Floor Cleaning ***a.m.*** ☐ ***p.m.*** ☐

PRE-OPERATING CHECKLIST FOR SELF-PROPELLED EQUIPMENT
REFERENCE OSHA STANDARD 1910.178(7)

Date: _____ Location: _____ Shift: _____
Type of Unit: _____ Unit #: FS0158 Hour Meter: _____

NA	BO	OK	WALK AROUND VISUAL INSPECTION	MAINTENANCE ACTION
			Inspect for oil/fuel/water/brake fluid leaks	
			Check engine comp/hyd oil line guards in place	
			Ensure all belts are in place	
			Check air cleaner(s) for external damage and element for cleanliness	
			Check radiator fins/fan for dirt or trash	
			Check all pins and bushings (cylinders etc.)	
			Check tires, lugs and rims	
			Cutting edges	

BEFORE STARTING ENGINE CHECK THE FOLLOWING:

			Fire extinguisher for serviceability	
			Engine oil level (fill if necessary)	
			Hydraulic system oil level (fill if necessary)	
			Transmission fluid level (fill if necessary)	
			Cooling system water level (fill if necessary)	
			Cab and cab components condition	
			Glass Visibility	
			Fuel supply (fill if necessary)	

WHEN STARTING ENGINE DO NOT ACCELERATE TO GOVERNED SPEED OR LOAD ENGINE FOR TWO MINUTES. CHECK THE FOLLOWING WHILE THE ENGINE IS WARMING:

			Engine oil pressure	
			Electrical charging system	
			Air pressure	
			Engine temperature	
			Torque converter temperature	
			All control levers	
			For unusual engine or drive train noises	

SAFETY INSPECTION - CHECK OR TEST THE FOLLOWING:

FOR ANY ITEM(S) BELOW CHECKED BO, EQUIPMENT MUST BE IMMEDIATELY TAKEN TO THE GARAGE AND TAGGED OUT

			Check all lights	
			Check all steps, ladders and hand rails	
			Check all doors, mirrors and glass for breakage	
			Windshield wiper operation	
			Bed down indicator	
			Seat belts	
			Horn	
			Parking brake (Must hold on incline)	
			Wheel Chock on unit (When unit is parked on any incline without operator at controls - Chock Must Be Used)	
			Service brake (Must stop in 5 ft. @ 3 mph)	
			Backup alarm	
			Steering	

COMMENTS: FS0158 = Tennant Truck Sweeper

Operator's Signature _____

PRE-OPERATING CHECKLIST FOR SELF-PROPELLED EQUIPMENT
REFERENCE OSHA STANDARD 1910.178(7)

Date: _____ Location: _____ Shift: _____

Type of Unit: _____ Unit #: FS0248/FS0249/FS0252 Hour Meter: _____

VA	BO	OK	WALK AROUND VISUAL INSPECTION	MAINTENANCE ACTION
			Inspect for oil/fuel/water/brake fluid leaks	
			Check engine comp/hyd oil line guards in place	
			Ensure all belts are in place	
			Check air cleaner(s) for external damage and element for cleanliness	
			Check radiator fins/fan for dirt or trash	
			Check all pins and bushings (cylinders etc.)	
			Check tires, lugs and rims	
			Cutting edges	
			BEFORE STARTING ENGINE CHECK THE FOLLOWING:	
			Fire extinguisher for serviceability	
			Engine oil level (fill if necessary)	
			Hydraulic system oil level (fill if necessary)	
			Transmission fluid level (fill if necessary)	
			Cooling system water level (fill if necessary)	
			Cab and cab components condition	
			Glass Visibility	
			Fuel supply (fill if necessary)	
			WHEN STARTING ENGINE DO NOT ACCELERATE TO GOVERNED SPEED OR LOAD ENGINE FOR TWO MINUTES. CHECK THE FOLLOWING WHILE THE ENGINE IS WARMING:	
			Engine oil pressure	
			Electrical charging system	
			Air pressure	
			Engine temperature	
			Torque converter temperature	
			All control levers	
			For unusual engine or drive train noises	
			SAFETY INSPECTION - CHECK OR TEST THE FOLLOWING:	
			FOR ANY ITEM(S) BELOW CHECKED BO, EQUIPMENT MUST BE IMMEDIATELY TAKEN TO THE GARAGE AND TAGGED OUT	
			Check all lights	
			Check all steps, ladders and hand rails	
			Check all doors, mirrors and glass for breakage	
			Windshield wiper operation	
			Bed down indicator	
			Seat belts	
			Horn	
			Parking brake (Must hold on incline)	
			Wheel Chock on unit (When unit is parked on any incline without operator at controls - Chock Must Be Used)	
			Service brake (Must stop in 5 ft. @ 3 mph)	
			Backup alarm	
			Steering	

COMMENTS: FS0248=Tenant Sweeper Truck FS0249=Johnson Sweeper Truck FS0252=Water Truck

Operator's Signature _____

APPENDIX B.

CONSENT ORDER

BEFORE THE AIR CONSERVATION COMMISSION
STATE OF MISSOURI

DOE RUN COMPANY RESOURCE	)	
RECOVERY FACILITY	)	
CONSENT ORDER	)	NO._____
RESPECTING LEAD EMISSIONS	)	

STIPULATION AND ORDER

COME NOW The Doe Run Company (Doe Run) and the Missouri Department of Natural Resources (MDNR) and stipulate as follows:

1. This Consent Order and Stipulation modifies and supersedes the previous Stipulation executed by Doe Run and the MDNR and entered by the Missouri Air Conservation Commission (Commission) on March 31,1994.

2. In accordance with the federal Clean Air Act, 42 U.S.C. § 7401, et seq., as amended, the State of Missouri submitted a State Implementation Plan for the attainment and maintenance of the National Ambient Air Quality Standard for Lead in the air quality control region located in the vicinity of Doe Run's Resource Recovery Facility which smelter is located near Bixby, Iron County, Missouri (the facility).

3. Pursuant to the federal Clean Air Law, 42 U.S.C. § 7401, et seq., as amended, the State of Missouri is in the process of revising said State Implementation Plan, which revision the state will submit to the EPA for its review and approval.

4. The parties, by their signatures hereto, acknowledge that they have read and understand the terms of this Stipulation and Order and agree to be bound thereby. The parties further acknowledge and agree that the terms of the Order may be enforced by suit

for injunctive relief and/or civil penalties pursuant to § 643.151, RSMo, as amended. The parties further agree and acknowledge that this Stipulation and Order is binding upon the parties hereto, their successors, assigns, agents, and employees.

5. Doe Run's Resource Recycling Facility consists of a lead smelter that may operate on either a primary or secondary feed stock and a resource recycling operation.

6. Since 1990, the air monitoring demonstrates that the facility meets the National Ambient Air Quality Standard for lead as specified in 40 C.F.R. 50.12.

ORDER

This matter comes before the Commission on the stipulation of the parties and after public comment and a public hearing, the Commission having jurisdiction over the subject matter and the parties hereto pursuant to § 643.050, RSMo, as amended, being fully advised in the premises:

IT IS HEREBY ORDERED that, in order to demonstrate attainment and maintenance of the National Ambient Air Quality Standard for lead as specified in 40 C.F.R. 50.12, Doe Run shall:

A. In the event the air quality data for any calendar quarter following October 3, 1995 (the attainment date for the National Ambient Air Quality Standard for lead), exceeds said National Ambient Air Quality Standard for lead as specified in 40 C.F.R. § 50.12, the MDNR will notify Doe Run. Doe Run shall then implement the following contingency control measures sixty (60) days from the date of its receipt of MDNR's

notification:

(1.) Pave the remainder of the employee parking area northwest of the Doe Run administrative building.

(2.) Increase the frequency of facility roadway sweeping and washdown to two (2) shifts daily.

(3.) Replace bags in the main baghouse compartment number 1 with Teflon coated bags to improve ventilation capacity to the furnace process.

(4.) If the National Ambient Air Quality Standard for lead has not been achieved within the first full quarter following installation of Teflon-coated bags in main baghouse compartment number 1, Doe Run shall replace the main baghouse compartment number 8 bags with Teflon-coated bags during the next full quarter.

(B) Other requirements:

(1.) Doe Run shall maintain the fence or use some other physical barrier to enclose the Doe Run property within the 1.5 ug/m^3 isopleth for its current resource recovery operations.

(2) Doe Run shall comply with the provisions at 10 CSR 10-6.120(2)(C), as amended.

The schedule set forth above will not apply in the event Doe Run does not

complete the emission control projects during the time periods specified above as the result of an Act of God , war, strike, riot or other catastrophe. The completion dates will be extended for the period of time corresponding to the time said circumstances are occurring. Doe Run shall have the burden of proof to establish that it is entitled to utilize the provisions of this paragraph.

THE DOE RUN COMPANY

By: Jerry Z. Pyatt Date: 3/1/00

Title: Vice President Secondary Smelting

MISSOURI DEPARTMENT OF NATURAL RESOURCES

By: Date: 5-11-00

Title:

ENTERED:

MISSOURI AIR CONSERVATION COMMISSION

David C. Zimmermann
Chair

Michael R. Fournie
Vice Chair

Date: 4-27-00

APPENDIX C.

10 CSR 10-6.120 Restriction of Emissions of Lead from Specific Lead Smelter-Refinery Installations

Title 10 - DEPARTMENT OF NATURAL RESOURCES

Division 10 - Air Conservation Commission

Chapter 6 - Air Quality Standards, Definitions, Sampling and Reference Methods and Air Pollution Control Regulations for the Entire State of Missouri

10 CSR 10-6.120 Restriction of Emissions of Lead From Specific Lead Smelter-Refinery Installations

PURPOSE: This rule establishes maximum allowable rates of emissions of lead from stacks in specific lead-smelter installations, except where New Source Performance Standards apply (as provided in 10 CSR 10-6.070). It also provides for the operation and maintenance of equipment and procedures specific to controlling lead emissions to the ambient air, both from stacks and from the fugitive emissions that escape stack collection systems at these installations.

(1) General Provisions.

(A) Application. This rule shall apply to specific existing installations in Missouri engaged in smelting and refining for the production of lead.

(B) Operation and Maintenance of Lead Emissions Control Equipment and Procedures. The owner or operator of any specific lead smelter shall operate and maintain all lead emissions control equipment and perform all procedures as required by this rule.

(C) Methods of Measurement of Lead Emissions.

1. The method of determining the concentration of visible emissions from stack sources shall be as specified in 10 CSR 10-6.030(9).

2. The method of measuring lead in stack gases shall be the sampling method as specified in 10 CSR 10-6.030(12).

3. The method of quantifying the determination of compliance with the emission limitations from stacks in this rule shall be as follows:

A. Three (3)-stack samplings shall be planned to be conducted for any one (1) stack within a twenty-four (24)-hour period in accordance with paragraph (1)(C)2. If this cannot be done due to weather, operating or other preventative conditions that develop during the twenty-four (24)-hour period, then the remaining samplings may be conducted in a reasonable time determined by the director following the twenty-four (24)-hour period;

B. Each stack sample shall have a sampling time of at least one (1) hour;

C. The process(es) producing the emissions to that stack being tested shall be operating at a minimum of ninety percent (90%) of capacity of the process(es) for the full duration of the samplings; and

D. The emission rate to be used for compliance determination shall be quantified by using the following formula:
Ec = T avg lbs per hour x 24 hours = lbs per 24 hours
Where:
Ec = 24-hour emission rate extrapolated from stack sampling results used for compliance determination; and
T avg = Summation of hourly emission rates of three (3) stack sampling results, divided by three (3) for the average hourly rate.

4. The method of measuring lead in the ambient atmosphere shall be the reference method as specified in 10 CSR 10-6.040(4)(G).

(D) Operational Malfunction.

1. The owner or operator shall maintain a file which identifies the date and time of any significant malfunction of plant process operations or of emission control equipment which results in increased lead emissions. The file also shall contain a description of any corrective action taken, including the date and time. 10 CSR 10-6.050 Start-Up, Shutdown and Malfunction Conditions shall apply.
2. All of these files relating to operational malfunction shall be retained for a minimum of two (2) years and, upon request, shall be made available to the director.

(2) Provisions Pertaining to Limitations of Lead Emissions from Specific Installations.

(A) ASARCO Primary Lead Smelter-Refinery at Glover, Missouri.

1. This installation shall limit lead emissions into the atmosphere to the allowable amount as shown in Table IA.

Table IA

Stack Names	**Emissions Limitation (lbs per 24 hours)**
Main Ventilation Baghouse	184.2
Blast Furnace	125.4
	82.3

2. Fugitive lead emissions from lead production processes.

A. This installation shall limit production of lead from processes that emit lead to the ambient air to the allowable amount as shown in Table IB and Table IC.

Table IB

Process Name	**Throughput (tons per calendar quarter)**

Sinter Plant—Material across Sinter Machine	202,000
Blast Furnace—Lead Bearing Material	75,000

Table IC

Process Name	Throughput (tons per day)
Sinter Plant-Material across Sinter Machine	3120

B. Recordkeeping. The operator shall keep records of daily process throughput corresponding with the processes in Table IB in subparagraph (2)(A)2.A. These records shall be maintained on-site for at least three (3) years and made available upon request of the director.

(B) Doe Run Primary Lead Smelter-Refinery in Herculaneum, Missouri. This installation shall limit lead emissions into the atmosphere to the allowable amount as shown in Table II.

Table II

Stack Name	Emissions Limitation[1] (lbs per 24 hours)
Sinter Plant Southend Baghouse	3.6
Main Stack	446.6
Sinter Plant Crusher Stack	21.8
Smooth Rolls Baghouse	2.2

(C) Doe Run Lead Smelter-Refinery near Buick, Missouri. The following applies to Doe Run's 1998 and ongoing lead producing operations at this installation.

1. Lead emissions from stacks. This installation shall limit lead emissions into the atmosphere to the allowable amount as shown in Table III.

Table III

Stack Name	Emissions Limitation (lbs per 24 hours)
Main Stack	540.0

2. Fugitive lead emissions from lead production processes. This installation shall limit production from processes that emit lead to the ambient air to the allowable amount as shown in Table IV.

Table IV

Process Name	Throughput (tons per day)
Blast Furnace	1000 Charge
Reverb Furnace	360 Charge
Rotary Melt	240 Charge
Refinery	648 Lead Cast

3. Recordkeeping. The operator shall keep records of daily process throughput corresponding with the processes in Table IV in paragraph (2)(C)2 of this rule. These records shall be maintained on-site for at least three (3) years and made available upon the request of the director.

(3) Provisions Pertaining to Limitations of Lead Emissions From Other Than Stacks at All Installations.

(A) The owner or operator shall control fugitive emissions of lead from all process and area sources at an installation by measures described in a work practice manual identified in subsection (3)(B). It shall be a violation of this rule to fail to adhere to the requirements of these work practices.

(B) Work Practice Manual.

1. The owner or operator shall prepare, submit for approval and then implement a process and area-specific work practice manual that will apply to locations of fugitive lead emissions at the installation.
2. The manual shall be the method of determining compliance with the provisions of this section. Failure to adhere to the work practices in the manual shall be a violation of this rule.
3. Any change to the manual proposed by the owner or operator following the initial approval shall be requested in writing to the director. Any proposed change shall demonstrate that the change in the work practice will not lessen the effectiveness of the fugitive emission reductions for the work practice involved. Written approval by the director is required before any change becomes effective in the manual.
4. If the director determines a change in the work practice manual is necessary, the director will notify the owner or operator of that installation. The owner or operator shall revise the manual to reflect these changes and submit the revised manual within thirty (30) days of receipt of notification. These changes shall become effective following written approval of the revised manual by the director.

(C) Recordkeeping.

1. The operator shall keep records and files generated by the work practice manual's implementation.

2. The work practice manual shall contain the requirement that records of inspections made by the operator of fugitive emissions control equipment such as hoods, air ducts and exhaust fans be maintained by the operator.
3. Records shall be kept for a minimum of two (2) years at the installation and shall be made available upon request of the director for purposes of determining compliance.

APPENDIX D.

EMISSION INVENTORY CALCULATIONS

APPENDIX D
EMISSION INVENTORY CALCULATIONS

Blast Furnace Fugitives

Assumptions
9.7 mph wind speed
459 square feet exposed open area
0.000062 g/cu. m. indoor lead levels

Emission Calculations

Emissions = (0.000062 g/cu.m.)(0.0283 cu.m./cu.ft.)(0.0022 lb/g)(9.7 mph)(5280 ft/mile)(459 sq.ft.)(365 d/y)(24 h/d)(0.0005 t/lb)
Emissions = 0.397 tpy = average 2.18 lb/day based on 365 days per year.

Dross Fugitives

Assumptions
9.7 mph average wind speed
208 square feet exposed open area
0.000068 g/cu. m. indoor lead levels

Emission Calculations

Emissions = (0.000068 g/cu.m.)(0.0283 cu.m./cu.ft.)(0.0022lb/g)(9.7 mph)(5280 ft/mile)(208 sq.ft.)(365 d/y)(24 hr/d)(0.0005 t/lb)
Emissions = 0.197 tpy = average 1.08 lb/day based on 365 days per year.

Refinery Fugitives

Assumptions
9.7 mph wind speed
505 square feet exposed open area
0.000075 g/cu. m. indoor lead levels

Emission Calculations

Emissions = (0.000075 g/cu.m.)(0.0283 cu.m./cu.ft.)(0.0022 lb/g)(9.7 mph)(5280 ft/mile)(505 sq.ft.)(365 d/y)(24 hr/d)(0.0005 t/lb)
Emissions = 0.529 tpy = average 2.90 lb/day based on 365 days per year.

Paste Baghouse

Assumptions
5000CFM air flow
0.0013 grains/cu.ft.
99% Control Efficiency for the Baghouse

Emissions = (0.0013 gr/cu.ft.)(5000 cu.ft./min)(60 min/hr)(24 hr/d)(1 lb/7000gr)(0.01 eff) = 0.01 lb/day

Shredder Baghouse

Permit limit of 74.81 lb/y
Potential Emissions = (74.81 lb/y) / (365 d/y) = 0.20 lb/day

Sinter Storage

Assumptions

Retain Capacity of Storing 1/12 Annual Throughput = 281,000 / 12 = 23,415 tons
Sinter fugitives contain 0.53 lb Pb per lb particulate
0.3 lb/t emission factor for sinter storage

Emissions = (0.3 lb/t)(0.53 lb PB/lb Particulate)(23,415 t/y) / (365 d/y) = 10.2 lb/day

Resuspension

Sinter storage has been reduced with the shut down of the sinter plant. Also, RCRA activities (cleaning the soil of lead) has reduced the amount of lead available for reentrainment (estimated 80%). Truck related emissions have been calculated.

Assumptions

Wind Related Resuspension = (112 lb/d)(0.20 = 22.4 lb/day
Traffic Related Resuspension = 3.3 lb/d including Primary Traffic, 1.6 lb/d for Secondary Traffic only.

Potential Emissions = 22.4 + 3.3 = 25.7 lb/day

Sweat Furnace Emissions

Emissions are based on permit conditions.

Emissions = (0.60 tpy)(2000 lb/t) / (365 d/yr) = 3.29 lb/d

Screen Raw Materials

Assumptions

Based on SCC Factor 3-05-020-02 and 12,000tpy
Emissions = (0.00085 lb/T)(0.53 lb PB/Part)(12,000 tpy) / (365 d/yr) = 0.01 lb/d

APPENDIX E.

PROCESS FLOW DIAGRAMS

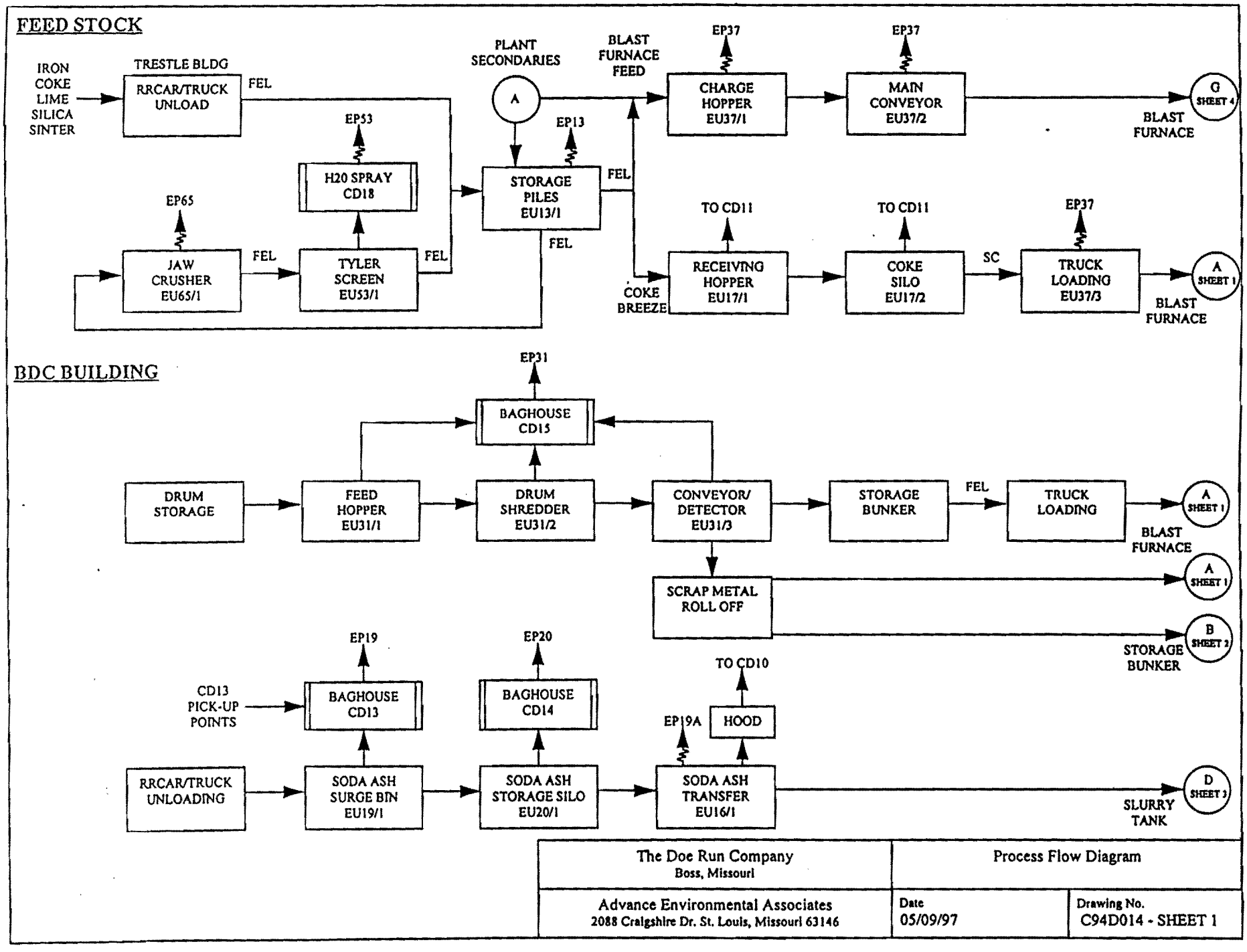
FEED STOCK
IRON
COKE
LIME
SILICA
SINTER
TRESTLE BLDG
RRCAR/TRUCK UNLOAD
FEL
EP53
H20 SPRAY CD18
EP65
JAW CRUSHER EU65/1
FEL
TYLER SCREEN EU53/1
FEL
PLANT SECONDARIES
A
EP13
STORAGE PILES EU13/1
FEL
FEL
BLAST FURNACE FEED
EP37
CHARGE HOPPER EU37/1
EP37
MAIN CONVEYOR EU37/2
G SHEET 4
BLAST FURNACE
TO CD11
RECEIVING HOPPER EU17/1
COKE BREEZE
TO CD11
COKE SILO EU17/2
SC
EP37
TRUCK LOADING EU37/3
A SHEET 1
BLAST FURNACE
BDC BUILDING
EP31
BAGHOUSE CD15
DRUM STORAGE
FEED HOPPER EU31/1
DRUM SHREDDER EU31/2
CONVEYOR/ DETECTOR EU31/3
STORAGE BUNKER
FEL
TRUCK LOADING
A SHEET 1
BLAST FURNACE
SCRAP METAL ROLL OFF
A SHEET 1
B SHEET 2
STORAGE BUNKER
EP19
EP20
TO CD10
CD13 PICK-UP POINTS
BAGHOUSE CD13
BAGHOUSE CD14
EP19A
HOOD
RRCAR/TRUCK UNLOADING
SODA ASH SURGE BIN EU19/1
SODA ASH STORAGE SILO EU20/1
SODA ASH TRANSFER EU16/1
D SHEET 3
SLURRY TANK
The Doe Run Company
Boss, Missouri
Process Flow Diagram
Advance Environmental Associates
2088 Craigshire Dr. St. Louis, Missouri 63146
Date
05/09/97
Drawing No.
C94D014 - SHEET 1

BDC BUILDING CONT.

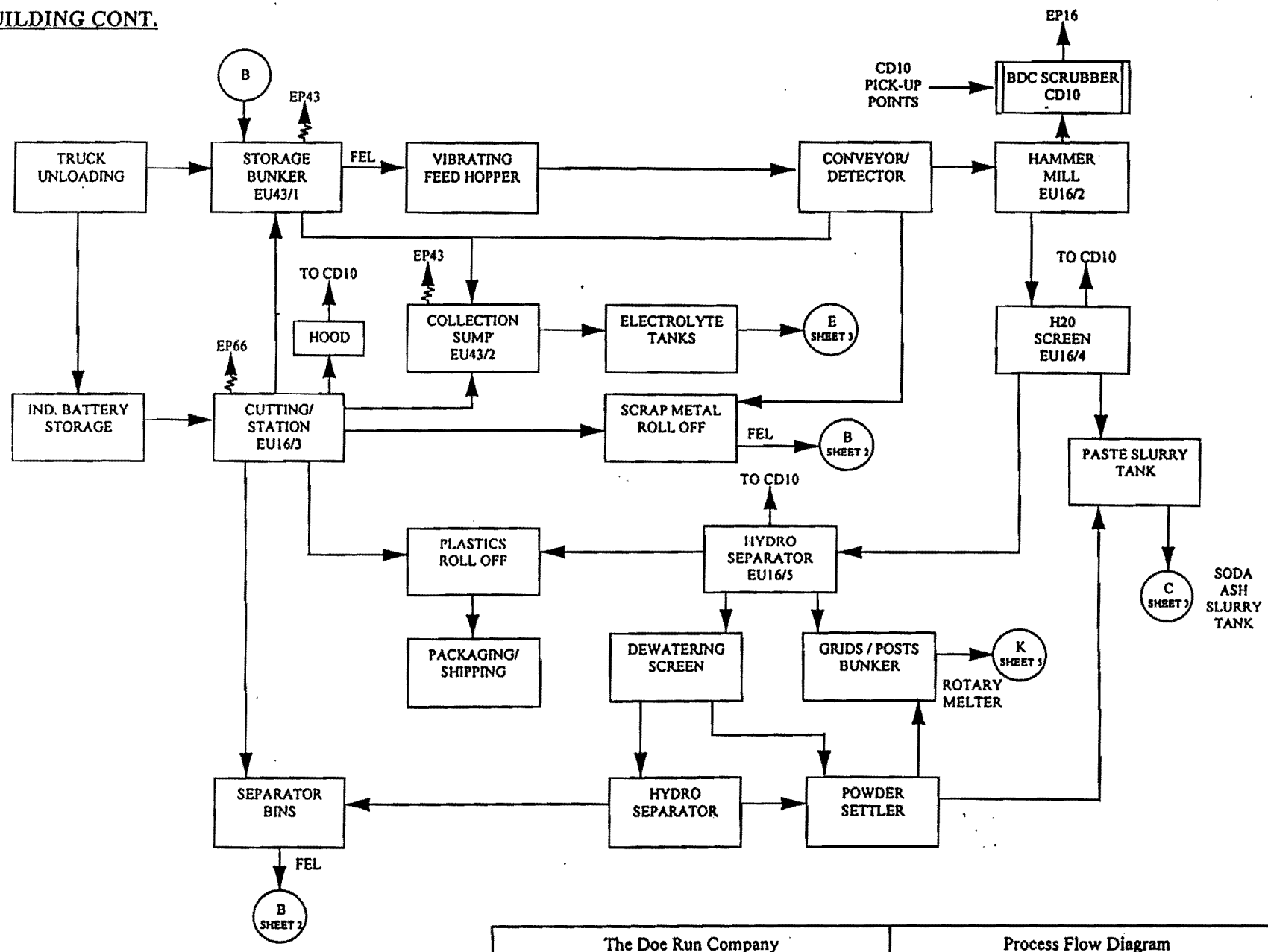

The Doe Run Company Boss, Missouri	Process Flow Diagram	
Advance Environmental Associates 2088 Craigshire Dr. St. Louis, Missouri 63146	Date 05/09/97	Drawing No. C94D014 - SHEET 2

BDC BUILDING CONT.

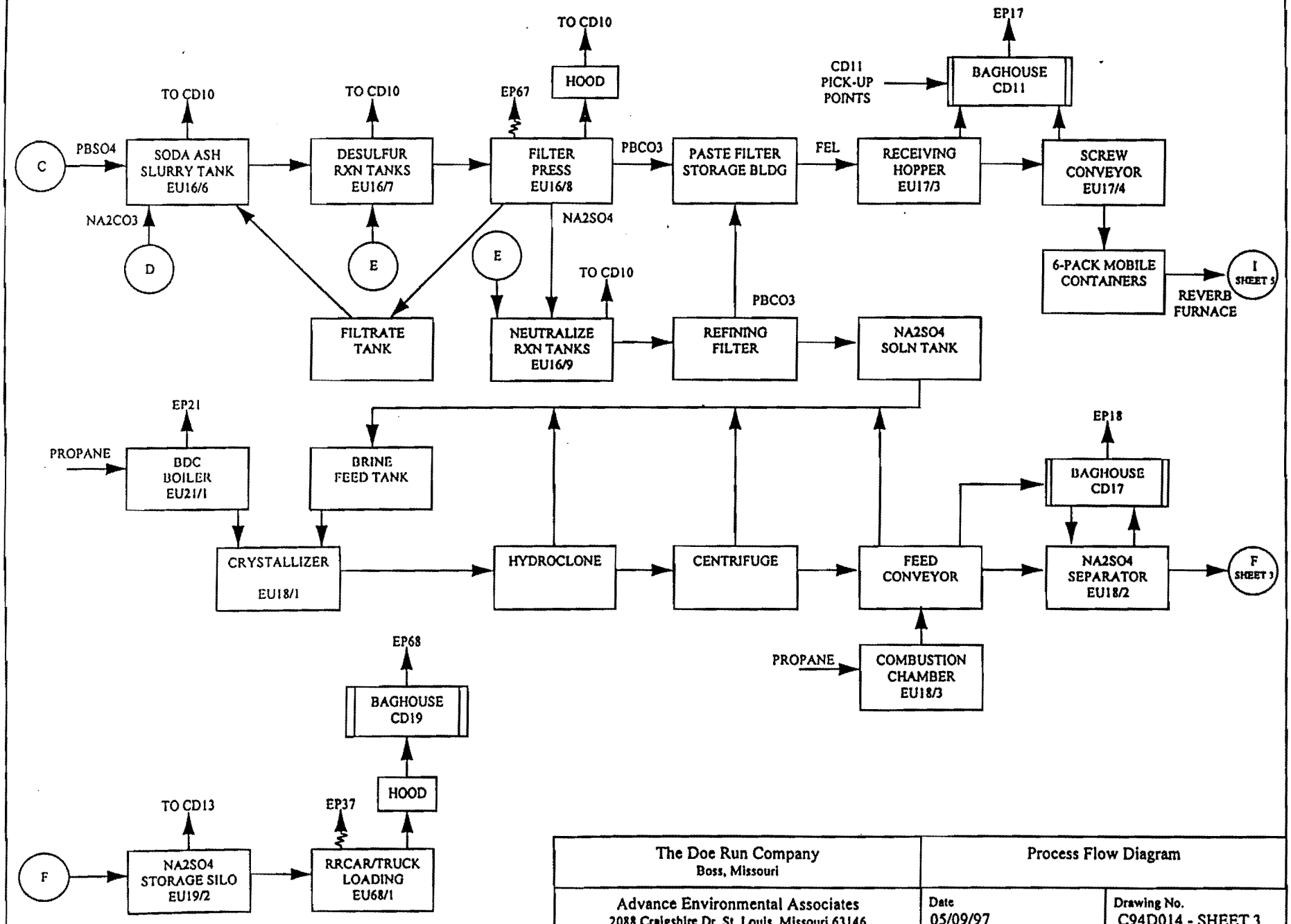

The Doe Run Company Boss, Missouri	Process Flow Diagram	
Advance Environmental Associates 2088 Craigshire Dr. St. Louis, Missouri 63146	Date 05/09/97	Drawing No. C94D014 - SHEET 3

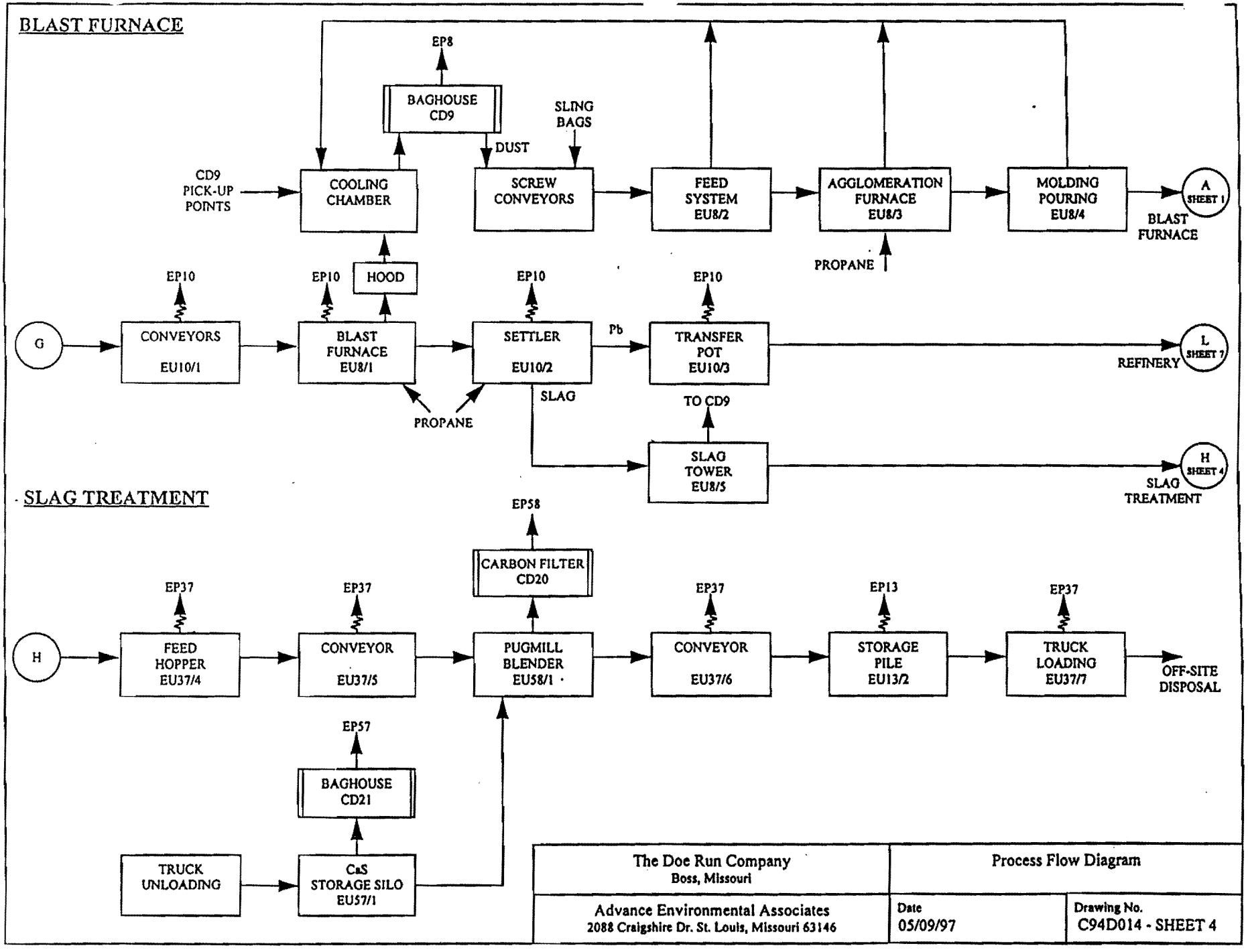
BLAST FURNACE
EP8
BAGHOUSE CD9
DUST
SLING BAGS
CD9 PICK-UP POINTS
COOLING CHAMBER
SCREW CONVEYORS
FEED SYSTEM EU8/2
AGGLOMERATION FURNACE EU8/3
MOLDING POURING EU8/4
A SHEET 1
BLAST FURNACE
PROPANE
EP10
HOOD
G
CONVEYORS EU10/1
BLAST FURNACE EU8/1
SETTLER EU10/2
Pb
TRANSFER POT EU10/3
L SHEET 7
REFINERY
SLAG
TO CD9
PROPANE
SLAG TOWER EU8/5
H SHEET 4
SLAG TREATMENT
SLAG TREATMENT
EP58
CARBON FILTER CD20
EP37
EP13
H
FEED HOPPER EU37/4
CONVEYOR EU37/5
PUGMILL BLENDER EU58/1
CONVEYOR EU37/6
STORAGE PILE EU13/2
TRUCK LOADING EU37/7
OFF-SITE DISPOSAL
EP57
BAGHOUSE CD21
TRUCK UNLOADING
CaS STORAGE SILO EU57/1
The Doe Run Company
Boss, Missouri
Process Flow Diagram
Advance Environmental Associates
2088 Craigshire Dr. St. Louis, Missouri 63146
Date
05/09/97
Drawing No.
C94D014 - SHEET 4

REVERBERATORY FURNACE

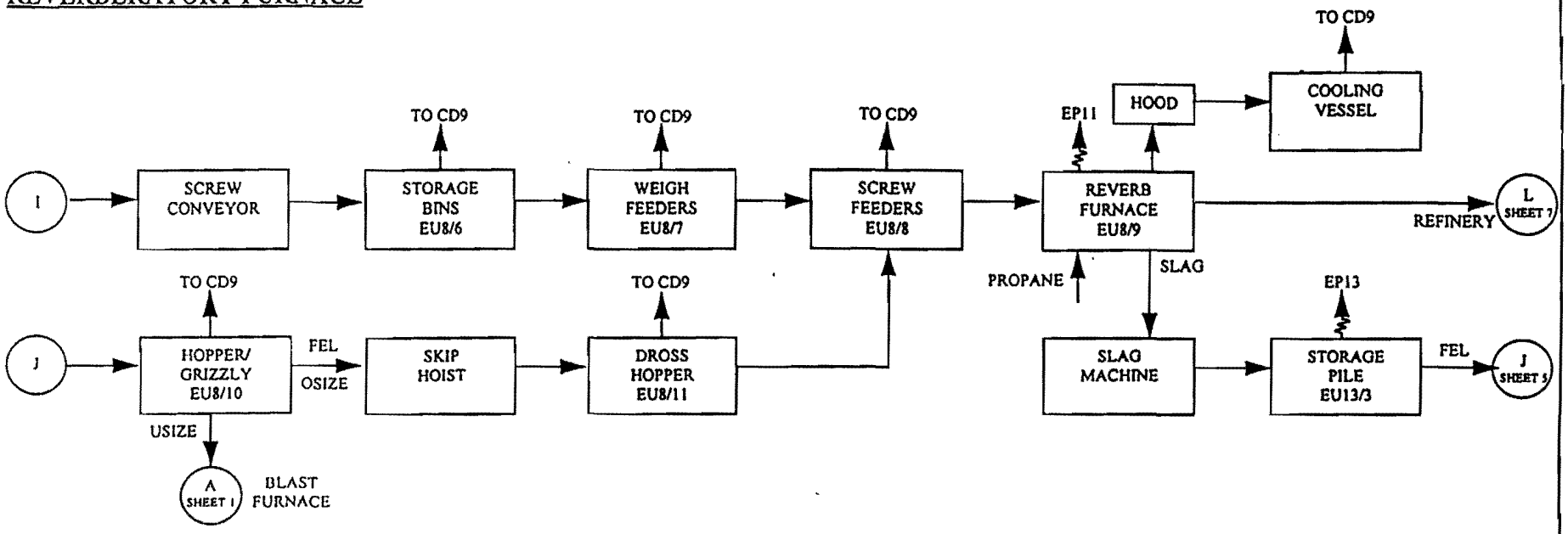

ROTARY MELTER

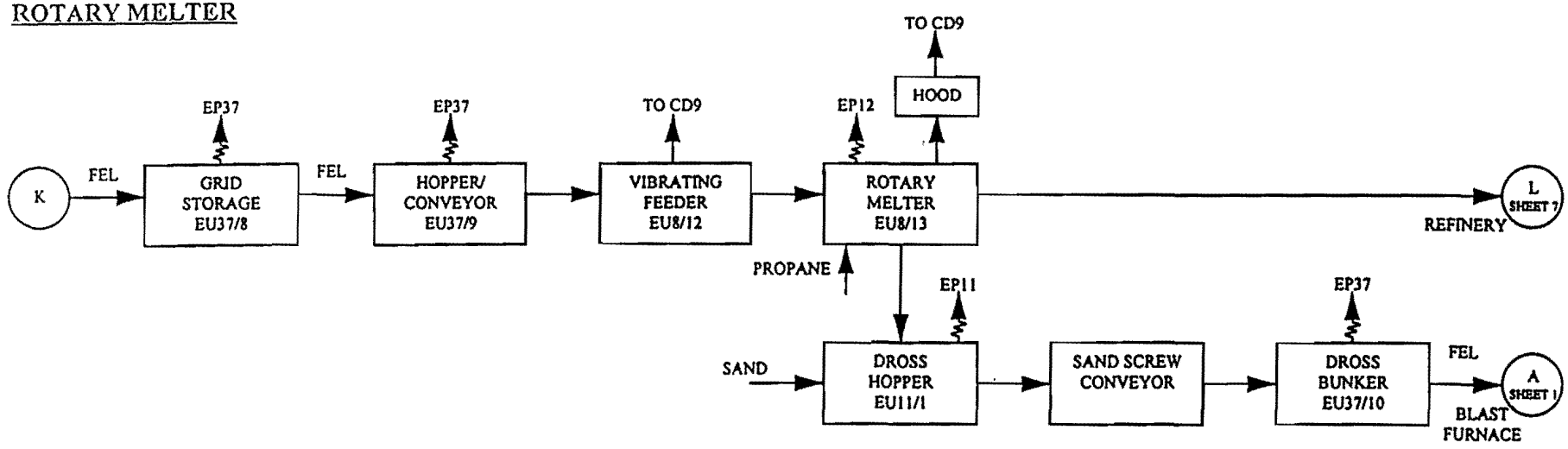

The Doe Run Company Boss, Missouri	Process Flow Diagram	
Advance Environmental Associates 2088 Craigshire Dr. St. Louis, Missouri 63146	Date 05/09/97	Drawing No. C94D014 - SHEET 5

RECLAMATION (SWEAT) FURNACE

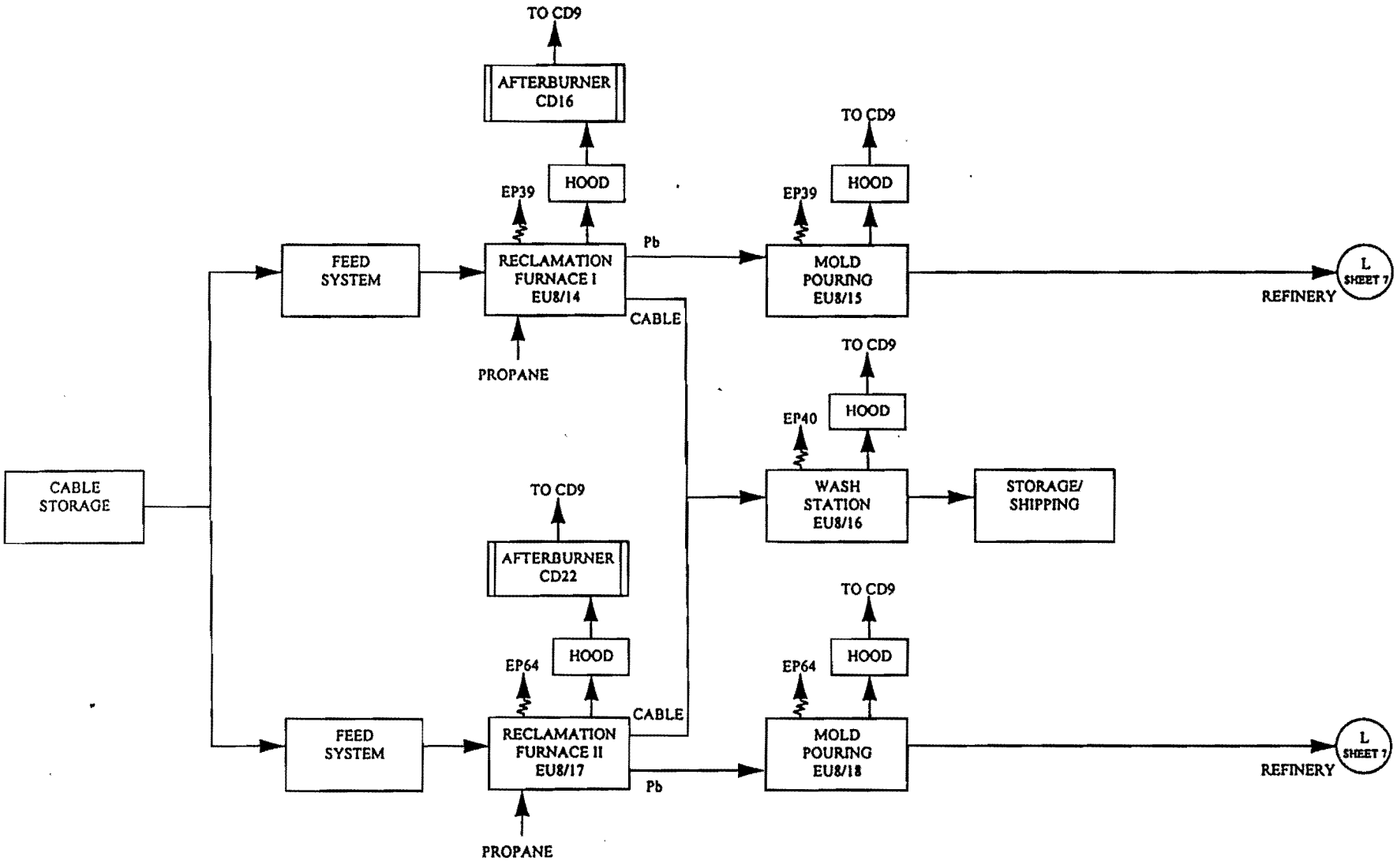

The Doe Run Company Boss, Missouri	Process Flow Diagram	
Advance Environmental Associates 2088 Craigshire Dr. St. Louis, Missouri 63146	Date 05/09/97	Drawing No. C94D014 - SHEET 6

REFINERY

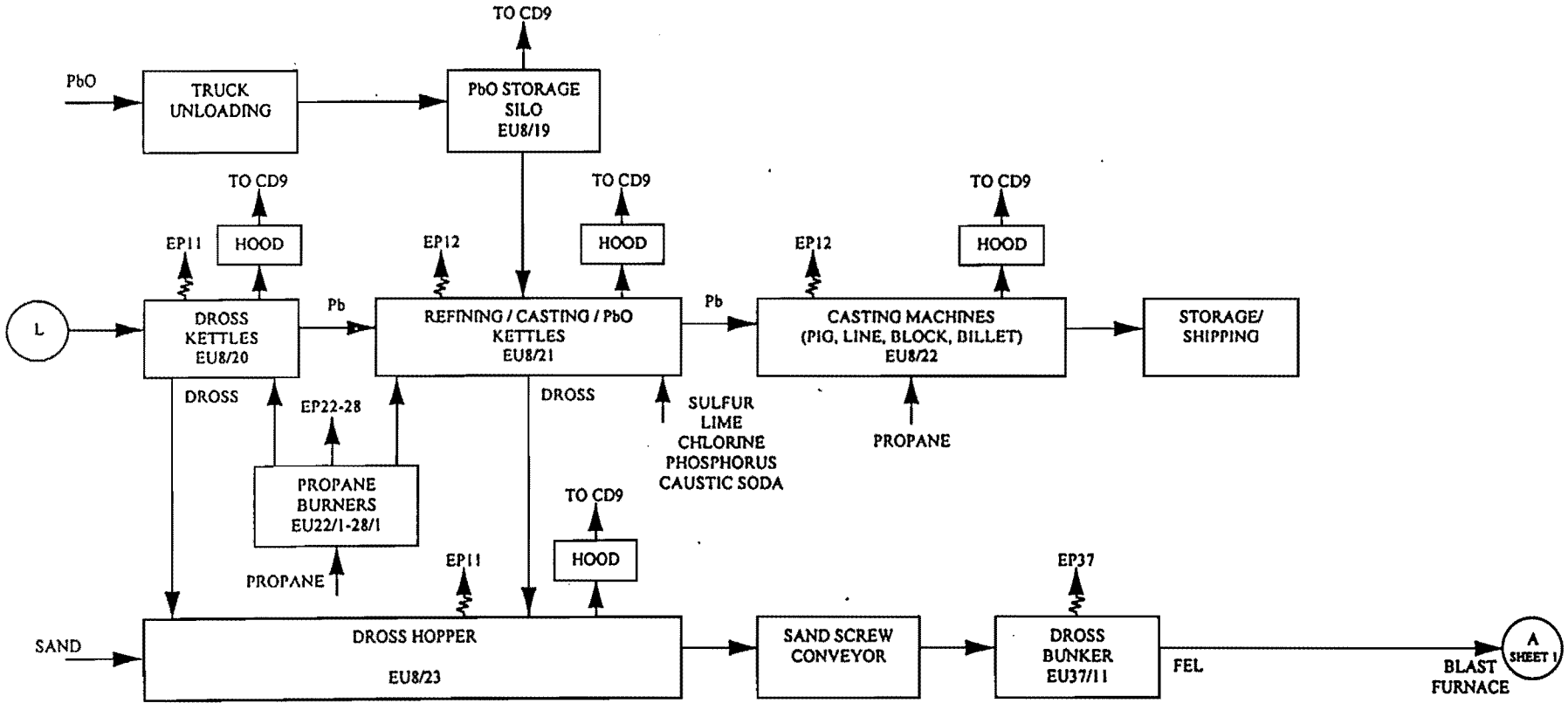

The Doe Run Company Boss, Missouri	Process Flow Diagram	
Advance Environmental Associates 2088 Craigshire Dr. St. Louis, Missouri 63146	Date 05/09/97	Drawing No. C94D014 - SHEET 7

MISCELLANEOUS SOURCES

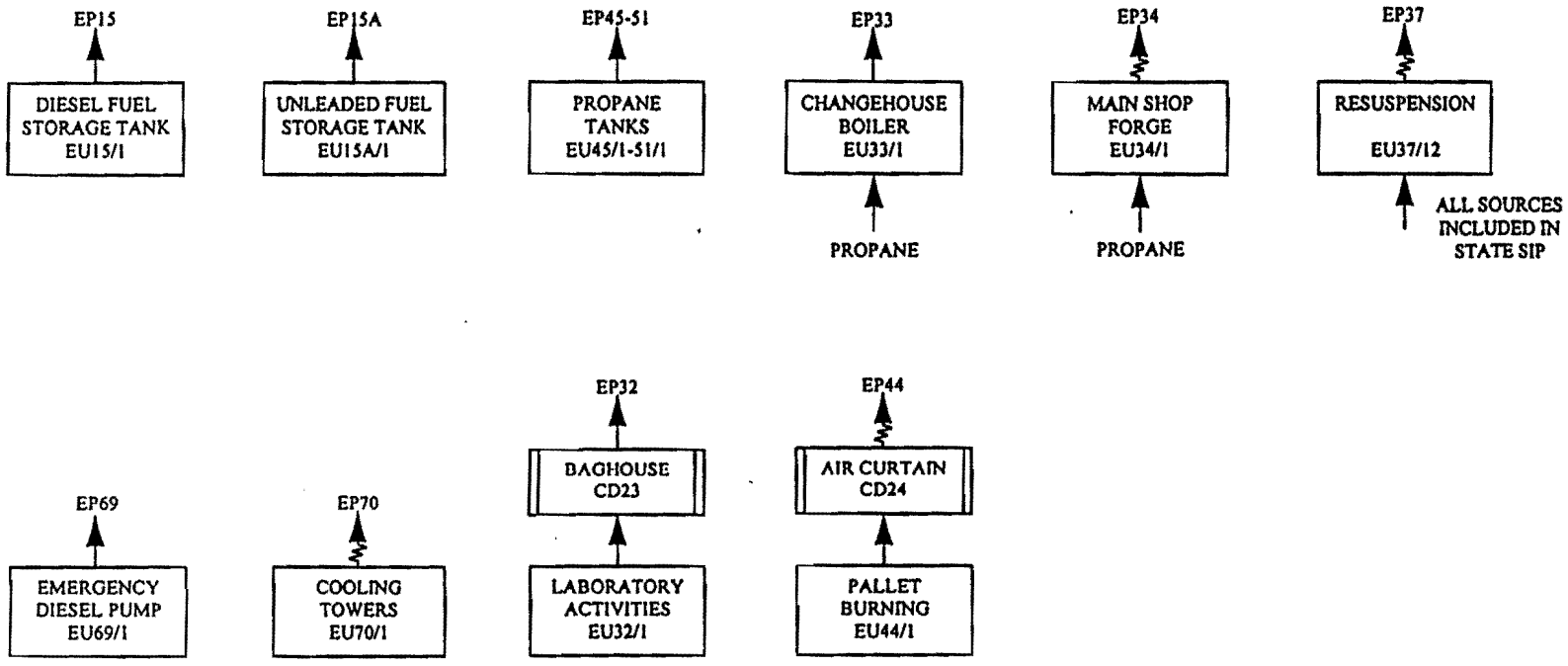

KEY
EP - EMISSION POINT
EU - EMISSION UNIT
CD - CONTROL DEVICE
FEL - FRONT END LOADER
SC - SCREW CONVEYOR

The Doe Run Company Boss, Missouri	Process Flow Diagram	
Advance Environmental Associates 2088 Craigshire Dr. St. Louis, Missouri 63146	Date 05/09/97	Drawing No. C94D014 - SHEET 8

TABLE 1
LIST OF EMISSION POINTS AND EMISSION UNITS

EP NUMBER	EU NUMBER	EU DESCRIPTION	STACK ID NUMBER
8		MAIN STACK	8
	8/1	BLAST FURNACE	
	8/2	FEED SYSTEM	
	8/3	AGGLOMERATION FURNACE	
	8/4	MOLD POURING	
	8/5	SLAG TOWER	
	8/6	STORAGE BINS	
	8/7	WEIGH FEEDERS	
	8/8	SCREW FEEDERS	
	8/9	REVERB FURNACE	
	8/10	HOPPER/GRIZZLY	
	8/11	DROSS HOPPER	
	8/12	VIBRATING FEEDER	
	8/13	ROTARY MELTER	
	8/14	RECLAMATION FURNACE I	
	8/15	MOLD POURING	
	8/16	WASH STATION	
	8/17	RECLAMATION FURNACE II	
	8/18	MOLD POURING	
	8/19	PbO STORAGE SILO	
	8/20	DROSS KETTLES	
	8/21	REFINING/CASTING/PbO KETTLES	
	8/22	CASTING MACHINES	
	8/23	DROSS HOPPER/SAND SCREW	
10		BLAST FURNACE FUGITIVES	FUGITIVE
	8/1	BLAST FURNACE	
	10/1	CONVEYORS	
	10/2	SETTLER	
	10/3	TRANSFER POT	
11		DROSS PLANT FUGITIVES	FUGITIVE
	11/1	DROSS HOPPER/SAND SCREW	
	8/9	REVERB FURNACE	
	8/20	DROSS KETTLES	
	8/23	DROSS HOPPER/SAND SCREW	
12		REFINERY FUGITIVES	FUGITIVE
	8/13	ROTARY MELTER	
	8/21	REFINING/CASTING/PbO KETTLES	
	8/22	CASTING MACHINES	

EP NUMBER	EU NUMBER	EU DESCRIPTION	STACK ID NUMBER
13		OPEN STORAGE FUGITIVES	FUGITIVE
	13/1	STORAGE PILES	
	13/2	STORAGE PILE	
	13/3	STORAGE PILE	
15	15/1	DIESEL FUEL STORAGE TANK	NA
15A	15A/1	UNLEADED FUEL STORAGE TANK	NA
16		BDC SCRUBBER	16
	16/1	SODA ASH TRANSFER	
	16/2	HAMMER MILL	
	16/3	CUTTING STATION	
	16/4	H2O SCREEN	
	16/5	HYDRO SEPARATOR	
	16/6	SODA ASH SLURRY TANK	
	16/7	DESULFUR TANKS	
	16/8	FILTER PRESS	
	16/9	NEUTRALIZE TANKS	
17		PASTE HANDLING BAGHOUSE	17
	17/1	RECEIVING HOPPER	
	17/2	COKE SILO	
	17/3	RECEIVING HOPPER	
	17/4	SCREW CONVEYOR	
18		NA2SO4 CRYSTALLIZER	18
	18/1	NA2SO4 CRYSTALLIZER	
	18/2	NA2SO4 SEPARATOR	
	18/3	COMBUSTION CHAMBER	
19		NA2CO3 UNLOADING/TRANSFER	19
	19/1	SODA ASH SURGE BIN	
	19/2	NA2SO4 STORAGE SILO	
19A	16/1	SODA ASH TRANSFER FUGITIVES	FUGITIVE
20	20/1	SODA ASH STORAGE SILO	20
21	21/1	BDC BOILER	21
22	22/1	PROPANE BURNERS (D1,D2)	22
23	23/1	PROPANE BURNERS (D3,D4,D5)	23
24	24/1	PROPANE BURNERS (R1,R2)	24
25	25/1	PROPANE BURNERS (R3,R4)	25
26	26/1	PROPANE BURNERS (R5,R6)	26
27	27/1	PROPANE BURNERS (R7,R8)	27
28	28/1	PROPANE BURNERS (R9,R10,R11)	28
31		SHREDDER BAGHOUSE	31
	31/1	FEED HOPPER	
	31/2	DRUM SHREDDER	
	31/3	CONVEYOR	

EP NUMBER	EU NUMBER	EU DESCRIPTION	STACK ID NUMBER
32	32/1	LABORATORY ACTIVITIES	32
33	33/1	CHANGEHOUSE BOILER	33
34	34/1	MAIN SHOP FORGE	FUGITIVE
37		RESUSPENSION	FUGITIVE
	37/1	CHARGE HOPPER	
	37/2	MAIN CONVEYOR	
	37/3	TRUCK LOADING	
	37/4	FEED HOPPER	
	37/5	CONVEYOR	
	37/6	CONVEYOR	
	37/7	TRUCK LOADING	
	37/8	GRID STORAGE	
	37/9	HOPPER/CONVEYOR	
	37/10	DROSS BUNKER	
	37/11	DROSS BUNKER	
	37/12	RESUSPENSION (STATE SIP)	
	68/1	RRCAR/TRUCK LOADING	
39		RECLAMATION FURNACE I FUGITIVES	
	8/14	RECLAMATION FURNACE I	
	8/15	MOLD POURING	
40	8/16	WASH STATION FUGITIVES	FUGITIVE
43		SECONDARY SO2 FUGITIVES	FUGITIVE
	43/1	STORAGE BUNKER	
	43/2	COLLECTION SUMP	
44	44/1	PALLET BURNING	FUGITIVE
45	45/1	PROPANE TANKS (57.5' x 30')	NA
46	46/1	PROPANE TANKS (57.5' x 30')	NA
47	47/1	PROPANE TANKS (57.5' x 30')	NA
48	48/1	PROPANE TANKS (64.5' x 30')	NA
49	49/1	PROPANE TANKS (64.5' x 30')	NA
50	50/1	PROPANE TANKS (64.5' x 30')	NA
51	51/1	PROPANE TANKS (15' x 11')	NA
53	53/1	TYLER SCREEN	FUGITIVE
57	57/1	CaS STORAGE SILO	57
58	58/1	PUGMILL BLENDER	58
64		RECLAMATION FURNACE II FUGITIVES	FUGITIVE
	8/17	RECLAMATION FURNACE II	
	8/18	MOLD POURING	
65	65/1	JAW CRUSHER	FUGITIVE
66	16/3	CUTTING STATION FUGITIVES	FUGITIVE
67	16/8	FILTER PRESS FUGITIVES	FUGITIVE
68	68/1	RRCAR/TRUCK LOADING	68
69	69/1	EMERGENCY DIESEL PUMP	69
70	70/1	COOLING TOWERS	FUGITIVE

APPENDIX F.

FUGITIVE EMISSION CAPTURE PROPOSAL

ENGINEERS

1720 Walton Road Blue Bell, PA 19422 610-828-3078 Fax 610-828-7842

RECEIVED
1999 JUL 16 AM 10: 30
AIR POLLUTION
CONTROL PGM

THE DOE RUN COMPANY
BOSS, MISSOURI

FEASIBILITY STUDY TO ACHIEVE MACT COMPLIANCE FOR SECONDARY LEAD SMELTING AND REFINING OPERATIONS

IES PROJECT NO. 165.9902

JUNE 30, 1999

DoeRun/165/9902.1/lrw

ENGINEERS

TABLE OF CONTENTS

1.0 EXECUTIVE SUMMARY 1

2.0 INTRODUCTION 3

2.1 Project Background 3
2.2 Project Objectives 5

3.0 MACT REQUIREMENTS 6

4.0 TESTING DATA 8

4.1 Air Flow Measurements 8
4.2 Lead Testing Results 10

5.0 TECHNICAL EVALUATION 11

5.1 Capture System 11

- Option 1 - Local Capture
- Option 2 - Global Capture
- Option 3 - Local and Global Capture

5.2 Baghouse Upgrade 19

5.3 Total Hydrocarbon Compliance 20
5.3.1 Existing Blast Furnace Operations and Observations 20
5.3.2 Installing an Afterburner on the Existing Blast Furnace 21
5.3.3 Installing One/Two Blast Furnaces Equipped with Afterburner(s) 24
5.3.4 Installing Two Rotary Furnaces vs a Blast Furnace 25

6.0 CAPITAL AND OPERATING COSTS 26

6.1 Furnace Equipment Cost 26
6.2 Capture System Costs 27

7.0 PERMITTING 28

TABLE OF CONTENTS (Continued)

8.0 RECOMMENDATIONS 29

9.0 PROJECT SCHEDULE 31

TABLES

Table 4-1 Summary Table of Testing Data 9
Table 6-1 Operating Cost Assumptions 26
Table 6-2 Capital and Operating Costs 26
Table 6-3 Capture System Capital Costs 27

APPENDICES

Appendix A Test Results and Calculations
Appendix B Blast Furnace Calculations
Appendix C Concept Drawings and Figures
Appendix D Cost Estimate Breakdowns

2.0 INTRODUCTION

2.1 PROJECT BACKGROUND

The operations of Doe Run lead acid battery recycling and secondary lead smelter in Boss, Missouri, can be segregated into three major areas: raw material preparation and pretreatment (sweating area), smelting, and refining.

The raw material preparation and pretreatment area receives used automobile and industrial batteries, lead dross, lead fume, and other lead-bearing scrap materials. The materials are sorted for efficient processing in the plant. The Breaking/Desulfurization/Crystallization (BDC) area contains two desulfurization units to reduce the sulfur content of the battery paste for ease of smelting in the reverberatory furnace and to minimize emissions of sulfur dioxide to the atmosphere. In addition, the sweating area contains a reclamation furnace that is used to remove metal and non-metal contaminants from lead-bearing scrap cables. The exhaust from this reclamation furnace is first vented to an afterburner to control VOC emissions and then vented to the main baghouse to remove particulates.

Smelting is performed in three furnaces: blast furnace, reverberatory furnace, and rotary melter. The blast furnace uses coke as an energy source and produces hard lead that contains a high antimony content. The exhaust from the blast furnace is vented to a cooling chamber and then to the main baghouse for particulate control. The dust captured in the main baghouse is sent to the agglomeration furnace, where the particulate matter is melted, cooled, and recycled to the blast furnace feed. The slag from the blast furnace is shipped offsite for disposal.

The reverberatory furnace is equipped with three propane-fired burners each rated at 10 MMBtu/hr and produces soft lead that contains a low antimony content. The gases exit this furnace at 2,300 to 2,400 F and are cooled to 550 F to 650 F with a sonic brand air/water spray system. They are further cooled in a cooling chamber before entering the main baghouse for particulate removal.

The rotary melter uses propane and produces hard lead that has a high antimony content. The exhaust from this furnace enters an afterburner and a cooling chamber before being sent to the main baghouse for particulate removal.

The refining area receives cooled lead from the smelting area and processes it through a series of steps to produce the desired types of lead alloys. Processing equipment in this area consists of drossing kettles, refining kettles, and casting machines. Emissions from the kettles and casting machines are captured and sent to the main baghouse for particulate control.

The main baghouse system is rated at approximately 450,000 cfm and handles the facility's furnace exhaust and process fugitive (hygiene) emissions.

During 1995, the U.S. Environmental Protection Agency (EPA) promulgated Maximum Achievable Control Technology (MACT) Standards for process sources, process fugitive sources, and fugitive dust sources for secondary lead smelting operations. The compliance deadline for the MACT Standards was June 23, 1998. These regulations require that secondary lead smelters with collocated blast and reverberatory furnaces not emit more than 20 ppm of hydrocarbons by volume expressed as propane corrected to 4 percent carbon dioxide in the exhaust gases. For standalone blast furnaces, the requirement for hydrocarbons is 360 ppm by volume expressed as propane corrected to 4 percent carbon dioxide in the exhaust gases.

During 1996, Doe Run was able to convince the EPA that its operations were unique and received permission to use the 360 ppm standard for the blast furnace. The reasons for this exception are the size of the blast furnace that was converted from primary to secondary lead smelting and its distant location from the reverberatory furnace, making ductwork connections difficult and expensive, the exhaust gas flow rate from the existing blast furnace, which (is approximately 55,000 cfm is significantly higher than a typical secondary lead smelter (10,000 to 15,000 cfm range), and the prohibitive operating cost of retrofitting the blast furnace with an afterburner.

In addition to the MACT Total Hydrocarbon (THC) Standard, other provisions of the Standard require that lead emissions from process sources and process fugitive sources be reduced to 0.00087 grains of lead per dry standard cubic foot. The Standard also imposes velocity requirements for capturing emissions from process fugitive sources, including refining kettles, smelting furnace and lead taps, charging hoppers, slag taps, etc. Although the main baghouse stack meets the MACT Lead Standard of 0.00087 gr/dscf, the capture system for process fugitive sources needs to be upgraded to meet the requirements.

Doe Run has completed the performance test for THC emissions required under 40 CFR § 63.547 and demonstrated compliance with the emission limit of 360 ppm as set forth in 40 CFR § 63.543. Doe Run has elected to demonstrate continuous compliance with the THC limitation by means of a continuous emissions monitor (CEM) that is located in the main stack of the baghouse. Monitoring results indicate that the emissions exceed the allowable limitation during a significant percentage of the facility's operation. This exceedance appears to be due to the connection of the various process fugitive sources, which affects the carbon dioxide concentration and increases the correction factor for the THC adjustment of 4 percent carbon dioxide.

Under a separate project, Doe Run is looking into either revising the THC emission limitation or changing the testing and monitoring method for demonstrating the compliance of the blast furnace. If Doe Run fails to convince the EPA to accept the alternate THC emission limit or the testing and monitoring method, then an engineering solution such as installing an afterburner on the existing blast furnace or installing a new, well-designed blast furnace must be implemented to meet production requirements and the MACT Standards.

This feasibility study addresses the engineering and technological solutions to bring the facility into compliance with the MACT Standards at the lowest possible cost, consistent with good engineering practices, so that Doe Run can remain competitive in the lead marketplace.

2.2 PROJECT OBJECTIVES

This feasibility study answers the following questions related to achieving compliance with the MACT Standards:

1. What is the most economical method for achieving blast furnace compliance with the MACT THC Standard? i.e., a new, well-designed secondary blast furnace or a new afterburner on the existing blast furnace.

2. What is the most economical method for achieving process fugitive source compliance with the lead standard? i.e., localized capture system vs. total building enclosure; upgrading the main baghouse system to increase its capacity, or installing separate baghouse systems for handling hygiene emissions and hot gas process emissions.

In answering these questions, this feasibility study has considered operational flexibility, future business growth, maintenance, space requirements, capital and operating costs, as well as permitting and regulatory issues.

3.0 MACT REQUIREMENTS

Under Title III of the Clean Air Act as amended, the EPA promulgated the National Emission Standards for Hazardous Air Pollutants (NESHAP) for Secondary Lead Smelters. These regulations use Maximum Achievable Control Technology (MACT) to control Total Hydrocarbon (THC) and lead emissions. The rules were promulgated on June 23, 1995, and subsequently amended on June 3, 1996, June 13, 1997, and August 24, 1998. These regulations are applicable to both major HAP as well as area HAP sources and address emissions from process sources, process fugitive sources, and dust sources. The regulations require compliance by June 23, 1998. Highlights of these regulations as they pertain to Doe Run are as follows:

1. This should only apply to "collocated" RV/BF operation. THC emissions from the reverberatory furnace shall not exceed 20 ppm by volume, expressed as propane, corrected to 4 percent carbon dioxide.

2. THC emissions from the existing blast furnace shall not exceed 360 ppm by volume, expressed as propane, corrected to 4 percent carbon dioxide.

3. THC emissions from a new blast furnace shall not exceed 70 ppm by volume, expressed as propane, corrected to 4 percent carbon dioxide or 20 ppm if collocated with the reverberatory furnace.

4. The THC Standard does not apply to rotary furnaces, reverb (standalone), or electric furnaces.

5. Lead emissions from the existing and new furnaces, the processes, and the process fugitives shall not exceed 0.00087 grains per dry standard cubic foot.

6. Capture velocity from the process fugitive sources must be maintained as set forth in 40 CFR § 63.544:

Enclosure Hoods (except refining kettles and dryer transition)	300 ft/min
Enclosure Hoods for refining kettles	250 ft/min
Dryer Transition	350 ft/min

7. In addition, Doe Run's facility is subject to performance testing to demonstrate compliance with the THC emission limitation, to monitoring and recordkeeping requirements to demonstrate continuous compliance, and to reporting and notification requirements.

4.0 TESTING DATA

4.1 AIR FLOW MEASUREMENTS

IES conducted air measurements at the Doe Run facility in Boss, Missouri, to obtain airflow information on the existing hygiene ventilation and furnace exhaust systems. Prior to taking the measurements, IES' engineers surveyed the ductwork network and determined the best measurement locations. Doe Run provided 1/2-inch to 3/8-inch diameter holes through the existing ductwork to allow the airflow measurements to be taken. Measurements from the reverberatory furnace were taken down stream from the sonic cooler and upstream of the cooling chamber. All airflow measurements were taken prior to the cooling chamber and are reported in the Appendix A. A summary of the results is provided at the end of this section.

IES used EPA test methods with a calibrated pitot tube instrument to measure airflows. IES performed 10- and 20-point pitot tube traverses in accordance with the EPA test methods.

The following test methods were used during the course of the testing.

Parameter	Method
Sample Point	EPA Method 1 - Sample and Velocity Traverses for Stationary Sources
Flow Rate	EPA Method 2 - Determination of Stack Gas Velocity and Volumetric Flow Rate (Type S Pitot Tube)

The measurements were conducted on eight air streams prior to their entry into the cooling chamber. The following streams were measured:

Blast Furnace Exhaust
Blast Furnace Hygiene
Reverb Furnace Exhaust
Reverb Hygiene
Refinery Kettles Hygiene
Rotary Melter Hygiene
Sweat Furnace Exhaust
Dust Furnace Duct Hygiene

The dust furnace exhaust airflow was not measured because of limited accessability for the testing crew, concerns about damaging the pitot tube, and concerns about damaging the refractory-lined exhaust stack. Due to these restrictions, Doe Run provided the dust furnace exhaust airflow information from prior testing information.

TABLE 4-1

SUMMARY TABLE OF TESTING DATA

AIR STREAM	AIRFLOW (ACFM)	TEMP. (°F)
Blast Furnace Exhaust	52,413	123
Blast Furnace Hygiene	45,537	235
Reverb Furnace Exhaust	31,948	505
Reverb Hygiene	58,700	161
Refinery Kettles Hygiene	41,360	70
Rotary Melter Hygiene	62,963	380
Sweat Furnace Exhaust	21,990	195
Dust Furnace Duct Hygiene	5,382	174
Dust Furnace Exhaust	6,200	----
Total Measured Airflow	**326,493**	----

The baghouse fan amperage was measured from the 4160 V panel. The North fan was operating at 88 amps and the South fan at 71 amps. The average amperage is taken as 79.5 amps. Calculating the brake horsepower with an assumed power factor of 1 yields 330.72 KW or 443.5 brake horsepower.

IES has not obtained the fan data for the North or South fans as of this writing. The fan curves will provide the information that shows what loading the fans are currently operating at and surplus capacity available, if any, for future use.

4.2 LEAD TESTING RESULTS

Testing conducted by Doe Run during May 1998 indicates that the total exhaust gas flow rate stack was approximately 365,144 ACFM at 151 F, while our testing indicates a total exhaust gas flow rate of 326,497 ACFM. The difference is approximately 12 percent and is accounted for because not all sources were measured by IES.

Actual emissions (7/1/98) from the stack test were 0.0004 gr/dscf = < ½ the allowable level.

5.0 TECHNICAL EVALUATION

5.1 CAPTURE SYSTEM

Existing System

Doe Run's existing ventilation system services furnace exhaust as well as general hygiene ventilation. The hygiene and furnace exhaust systems converge at the cooling chamber before entering the baghouse. The hygiene system services most of the kettles, some bins, hoppers, and taps; however, modifications are needed to bring the system up to compliance standards. The modifications include additional hoods, kettle covers, and increased airflow rates on equipment with existing hoods. In addition, the existing ductwork is partially filled with material. In general, the duct should be replaced with new ductwork around the kettles and innovative duct design concepts should be explored to allow duct cleaning to be performed more easily.

The modifications to the existing system are described below within each of the three options. The design basis for the capture system is stated below:

Basis of Design - Local Capture System

The local capture system was sized based upon the velocity requirements set forth under the MACT Standards in 40 CFR § 63.544. The local capture requirements are stated within the Standard in Table 3 titled "Summary of Standards for Process Fugitive Sources." The face velocity requirements that determine the air requirements are stated under Control Option I of the Standard. Listed below are the values applied to this feasibility study for reference.

DESCRIPTION	FACE VELOCITY
Enclosed / Covered Kettles	250 FPM (75 M/m)
Charging Hoods at Furnaces	300 FPM (90 M/m)
Tap and Molds Hoods at Furnaces	300 FPM (90 M/m)

Basis of Design - Global Ventilation

The global ventilation system was sized based upon the velocity requirements set forth under the MACT Standards in 40 CFR Parts 265, 51, and 63. The basis of design used in this study is as follows:

DESCRIPTION	DESIGN VALUE
Natural Draft Openings (NDOs)	< 5% of bldg surface
NDOs ave. facial velocity	200 FPM
Differential Press. Across NDOs	0.007 in. H_2O

Option 1 - Local Capture (Ref. Drawing M100)

While at the facility, IES reviewed the existing local capture system and determined that all of the kettles need to be enclosed. The dross kettles lacked enclosures and ventilation hoods, which need to be added. The reverberatory furnace requires a canopy hood to capture emissions from the furnace, and the sweat furnace requires canopies for the charging doors and taps. The existing ductwork is partially filled with material and will need to be cleaned and some sections replaced with a better design for ease of maintenance.

Air Requirements with Existing Kettle Hood Design

The local capture system was reviewed using the existing kettle hoods and increasing the airflow to meet MACT Standards. Presently the total ventilation requirement for the furnace exhaust and process fugitive emissions is 326,500 ACFM, which consists of 130,700 ACFM for the furnace exhaust and 195,800 ACFM for the process fugitives. Our calculations show the total ventilation requirement must be increased from 326,500 ACFM to 740,000 ACFM to meet the MACT requirements. This airflow will consist of the same 130,700 ACFM for the furnace exhaust, 240,000 ACFM for the canopy hood over the reverb furnace (see Figures 1 and 2), and another 369,300 ACFM from the kettles and other ancillary equipment. The airflow requirement from the 16 kettles has to be doubled from the flows shown on the Fluor Daniel flow drawings (D2-800, D2-801, D3-801) to meet the MACT requirements. The sweat furnace airflow requirements are shown in Figures 3 and 4.

To accommodate this additional air, Doe Run would have to either replace all the ductwork and fans with equipment sized for twice the existing capacity or install a parallel duct network to additional fans. IES considered this to be a very expensive proposition, which was dictated by the kettle hood design. Therefore, IES considered modifications to the existing kettle hoods that would meet MACT requirements.

Air Requirements with Modified Kettle Hood Design

Modification of the existing kettle hoods as shown in attached Figure 5, will allow for a 6-inch slot around the perimeter of the hood. The face velocity of the slot will be 250 feet per minute and require 6,000 ACFM of air. The total air requirement for the kettles reduces to 96,000 ACFM; the sweat furnace and reverb canopy hood are the same as stated above, which yields a total air requirement of 643,000 ACFM. This airflow will allow both the existing duct work and fans to be reused. If this option is selected, the detailed design needs to consider maintenance of the ductwork that will be easy to clean and maintain. Transport velocity alone will not maintain a clean duct in certain locations, such as the kettle floor.

EQUIPMENT DESCRIPTION	REQUIRED ACFM
FURNACE EXHAUSTS	
DUST FURNACE	6,200
BLAST FURNACE	54,000
REVERBERATORY FURNACE	32,000
ROTARY FURNACE	16,500
SWEAT FURNACE	22,000
TOTAL FURNACE EXHAUSTS	**130,700**

Airflow requirements for each piece of equipment are shown on drawings P101, P102, and P103 and in Figures 1, 2, 3, 4, and 5 in Appendix C.

EQUIPMENT DESCRIPTION	REQUIRED ACFM
HYGIENE VENTILATION	
DROSS AREA	87,000
REFINERY AREA	51,800
ROTARY HYGIENE	30,000
BLAST FURNACE HYGIENE	58,700
DUST FURNACE HYGIENE	5,800
SWEAT FURNACE HYGIENE (NEW)	38,700
REVERB. FURNACE CANOPY (NEW)	240,000
TOTAL HYGIENE VENTILATION	**512,000**

Total ventilation requirements for Option 1 - Local Capture are listed below and the proposed new equipment is shown on drawing C100.

EQUIPMENT DESCRIPTION	REQUIRED ACFM
FURNACE EXHAUST	130,700
HYGIENE VENTILATION	512,000
TOTAL	**642,700**

Option 2 - Global Capture (Ref. Drawing M101)

IES surveyed the existing structures to assess the existing openings and doorways. All openings and doors were identified in the smelting area and the refinery area and are tabulated below.

GLOBAL BUILDING VENTILATION SUMMARY - SMELTING AREA	
AREA DESCRIPTION	**AREA (SF)**
EAST FACE SMELTING AREA	1,320
WEST FACE SMELTING AREA	552
SOUTH FACE SMELTING AREA	640
NORTH FACE SMELTING AREA	708
CUPOLA SMELTING AREA	2,400
TOTAL	**5,620**

The amount of open area should not exceed 5 percent of the building's surface area. The surface area of the smelting building is 80,000 square feet. Therefore, to comply with Part 51 of the Standard, this area cannot exceed 4,000 square feet (SF). Under this option, if the cupola is closed in and a duct header is installed within the building to mechanically draft the whole space, then open area would become 5,620 SF less the 2,400 SF, giving a net 3,220 SF of open area, which meets the 5 percent requirement. The ventilation airflow required for this space is 644,000 ACFM.

GLOBAL BUILDING VENTILATION SUMMARY - REFINERY AREA	
AREA DESCRIPTION	**AREA (SF)**
EAST FACE REFINERY AREA	NO OPENINGS
WEST FACE REFINERY AREA	INTERNAL WALL
SOUTH FACE REFINERY AREA	360
NORTH FACE REFINERY AREA	48
CUPOLA REFINERY AREA	1,850
TOTAL	**2,258**

The amount of open area should not exceed 5 percent of the building's surface area. The surface area of the refining building is 69,880 square feet. Therefore, to comply with Part 51 of the Standard, this area can not exceed 3,500 SF. Under this option, if the cupola is closed in and a duct header is installed within the building to mechanically draft the whole space, then the open area would become 2,258 SF less the 1,850 SF giving a net 408 SF of open area, which meets the 5 percent requirement. The ventilation airflow required for this space is 81,600 ACFM. The combined airflow for both buildings would be 644,000 + 81,600 equaling 725,600 ACFM.

The regulations allow the door areas to be subtracted from the area calculations if the doors are kept closed during normal operations. By allowing for the doors to be kept closed during operations, the net square feet becomes 2,764 SF in the smelting building and 408 SF in the refinery building, for a total net 3,172 SF of open area. The global airflow requirement becomes 634,400 ACFM, which meets the 5 percent requirement.

To obtain the total exhaust requirements, it is necessary to add the furnace exhausts to the global ventilation requirements, which yields the following total air requirement.

GLOBAL VENTILATION	ACFM
SMELTING AND REFINERY BLDGs	634,400
FURNACE EXHAUST	130,700
TOTAL	**765,100**

Option 3 - Local and Global Capture (Ref. Drawing M102)

IES reviewed a third concept that provides for containment over the dross and refinery areas using global ventilation and the use of local capture for the other areas of the process. This option was considered to allow for easier materials handling with the use of overhead cranes and still provide ventilation for general hygiene.

In the dross area as shown on Ref. Drawing M102, a full height partition wall would be erected at column line G, which would separate the dross area from the blast furnace area. The partition will extend from the kettle floor to the roof line. The partition along column line G could be relocated to column line H if new smaller blast furnaces are added to the smelting area. Additional partitions would be erected along column line 10 separating the dross area from the refinery area, and along column line 15 adjacent to the reverberatory furnace. An 8-foot by 8-foot opening is proposed for the partitions separating the dross area from the blast furnace area and the reverb furnace area. Outside doors used to move kettles inside and out of the area to grade level would remain closed during normal operation. The partition wall between the dross area and the refinery area would have two 12-foot-high by 20-foot- wide openings at the kettle floor elevation. In the refinery area, a full-height partition wall would be erected at column lines 5, D', and 6 as shown on concept drawing M102. The outside openings would remain the same as they are currently. Doors would be needed for access to the casting area. Using the global ventilation concept in the dross area and the refinery area will not require the local capture system requirements for each individual kettle. The design airflow that is currently designated for the kettles would be diverted to a global ventilation system.

Areas of the process that would still have local capture are the sweat furnace, the casting area, dust furnace, the existing blast furnace hygiene, and all the furnace exhaust. Listed below are the airflow requirements.

EQUIPMENT DESCRIPTION	REQUIRED ACFM
DROSS & REFINERY AREA (NEW)	250,000
DROSS & REFINERY KETTLES	0
SWEAT FURNACE HYGIENE (NEW)	38,700
BLAST FURNACE HYGIENE	58,700
DUST FURNACE HYGIENE	5,800
FURNACES	130,700
CASTING AND REVERB HYGIENE	22,000
TOTAL HYGIENE VENTILATION	**505,900**

IES considered the regulations covering lead exposure, 29 CFR 1910.1025, and added back the refinery and dross kettle ventilation system to the local capture aspect of this option. The added air volume brings the total airflow requirement to 601,900 ACFM as shown in the table below. This is within the capability of the baghouse's capacity and is recommended to provide adequate personnel protection.

EQUIPMENT DESCRIPTION	REQUIRED ACFM
DROSS & REFINERY AREA (NEW)	250,000
DROSS & REFINERY KETTLES	96,000
SWEAT FURNACE HYGIENE (NEW)	38,700
BLAST FURNACE HYGIENE	58,700
DUST FURNACE HYGIENE	5,800
FURNACES	130,700
CASTING AND REVERB HYGIENE	22,000
TOTAL VENTILATION	**601,900**

Impact of New Blast Furnaces on Ventilation

The new blast furnace requirements were reviewed and are described in subsequent sections of this report. Each new furnace would require 10,000 ACFM. When two new blast furnaces are considered and compared against the existing blast furnace requirements, there is a net reduction of 34,000 ACFM.

SUMMARY OF OPTIONS	ACFM WITH OLD BLAST FURN.	ACFM WITH TWO NEW BLAST FURN.
OPTION 1 - LOCAL CAPTURE	643,000	609,000
OPTION 2 - GLOBAL CAPTURE	765,000	731,000
OPTION 3 - LOCAL & GLOBAL CAPTURE	602,000	568,000

Note: Airflows are rounded to the nearest thousands.

IES recommends a combination of local capture and global capture as the most effective and efficient method of implementing the MACT Standards because it provides greater operational flexibility, allows for easier materials handling with the overhead cranes, and reduces lead exposure to the employees. Taking Option 3 one step further, IES considered the impact to segregate the furnace exhaust from the general ventilation requirements of the facility.

Segregation of Furnace Exhaust from Hygiene Ventilation

If the ventilation air is directed to the existing baghouse and furnace gases are directed to a new baghouse, the particulate loading is likely to remain the same or decrease, thus not requiring the existing baghouse to be upgraded with new high-efficiency filter bags. Therefore, the existing baghouse could potentially be left alone and modifications to the fans would be minimal as shown in Figure 8. The ventilation air required would be 471,200 ACFM, which is a 5 percent increase over the 450,000 ACFM stated capacity of the baghouse. Fan curves were not available at the time of this writing; however, this small increase is within the capability of the existing system without major modifications. This represents an avoided cost potential of $715,000 from not having to install Gore bags.

The high temperature exhaust streams from the furnaces would be directed to a new baghouse located next to the existing baghouse, as shown in drawing C101. IES obtained the cost for a new high temperature baghouse by Wheelabrator with Nomex bags and with a new 400 HP fan to move 130,700 ACFM. If the costs of a new transformer, switchgear, feeder, furnace gas coolers, and duct modifications are considered, the total installed cost is estimated to be $2,600,000. However, Doe Run is able to make a product for market with the desulfurization process and recycle material from the tailings of the baghouse. The high temperature baghouse would need a lime injection system and the desulfurization system could be decommissioned from service at the expense of losing a revenue stream. The high temperature baghouse would need calcium carbonate or precoat on the bags to compensate for the elimination of the desulfurization process. This precoat would not allow Doe Run to cost effectively recover material from a high temperature baghouse operated in this manner. There does not seem to be any advantage to separate the hot furnace gases into a separate high temperature baghouse. However, there is an advantage of combining the gas streams into a single baghouse; the dilution effect aids in meeting compliance standards. Therefore, IES recommends keeping the existing baghouse with the combined gas streams.

Fan Requirements

Common to all of the above options is the requirement to increase the air handling capacity by as much as 50 percent. The fans can be rebuilt, upgraded, or replaced with fans of increased capacity. For this study, IES chose not to consider increasing the capacity of the existing fans because capacity increases above 20 percent are difficult to achieve. IES considered the addition of a third fan to increase the air handling capacity at the baghouse. This fan would be the same or similar to the two existing fans. The existing fans are approximately 800 horsepower each and a third fan of equal

capacity is needed. This new fan would be located between the two existing fans with a split discharge chute to direct the air to both sides of the baghouse. IES assumed a new 4160 V transformer, feeder, and switchgear would be required for this additional fan. An additional hygiene fan would also be needed to assist the air movement from the building enclosure of the dross and refinery area prior to the cooling chamber.

In addition, IES considered relocating all the fans to be after the baghouse, thus putting the baghouse under negative pressure. The horsepower fan requirements would be greater than for the existing fans because of the additional static pressure requirements from the cooling chamber to the baghouse exhaust. However, because IES believes that this option has higher capital and operating costs with little benefit, this option was not developed.

5.2 BAGHOUSE UPGRADE

The existing Wheelabrator baghouse has 14 compartments with 416 bags per compartment for a total of 5,824 polyester bags and a cloth area of 232,960 square feet. The rated air capacity of the baghouse is 450,000 ACFM. The air-to-cloth ratio for the original design and purchase specification is 1.93 ACFM/SF. The baghouse has a pressure design limit of ± 12 inches water gauge.

With the technology that is available today, this air-to-cloth ratio is conservative and can be increased to achieve higher capacity. IES checked the inlet grain loading to the baghouse by collecting the tonnage of particulate going to the dust furnace. Doe Run reported that 12,730 tons of material was collected during a one year period. Based upon a 7-day/week, 3 shift operation, the inlet grain loading per cubic feet per minute is calculated to be 0.75 gr/cfm at the design flow of 450,000 ACFM. If the IES-measured flow is used for this calculation, the grain loading becomes 1.04 gr/cfm. It is typical for a baghouse to have inlet grain loadings between 5 to 10. The flow rate through the baghouse can be increased from 450,000 to a maximum of 800,000 ACFM. However, this is not required nor recommended by IES. Under Option 3, MACT compliance can be achieved with an airflow rate of 602,000 ACFM. The air-to-cloth ratio would then become 2.5, which is still very reasonable. The grain loading would increase slightly with better capture systems but should not increase dramatically. Therefore, IES does not see a any reason why the baghouse throughput cannot be increased because of particulate loading.

IES reviewed the stack test data provided by Doe Run. The test information indicated that the existing polyester bags marginally meet compliance standards. To show a good faith effort to conform with the MACT Standards, Doe Run should change the filter medium to a more efficient filter. Changing the bags to Gore-type bags will allow Doe Run to improve the performance of the baghouse at reduced emission levels. However, changing the bags in the baghouse to higher efficient filters may take away any incentive to segregate the furnace exhaust by installing a high temperature baghouse.

To achieve better filtration over the existing polyester bags, Doe Run should consider using a coated bag. Doe Run has made inquiries regarding these bags with W.L. Gore and has discussed potential capacity increases. W.L. Gore has successfully supplied Doe Run's primary smelter known as the Herculaneum Facility with 8-inch-diameter, 21-foot 4-inch-long Gore bags bonded to polyester fabric. Although the Herculaneum Facility is a primary smelter, Gore has a substantial reference list of successful applications in the smelting industry.

The Gore bags are hung and strapped with a felted snap band at the Herculaneum Facility with good performance results and good bag life. It was reported to IES that this arrangement gives the Herculaneum Facility a bag life of 48 to 60 months between changes. In comparison to the Boss Facility, the bag life is reported to be between 24 to 30 months with standard polyester bags. The bags at the Boss Facility are 8 inches in diameter and 20 feet long. The bags are hung and have a cap top design. The typical failure mode of the bag is reported to be bottom bag cuff failure.

Wheelabrator did not use the cap design on 8-inch bags and many manufactures avoid the cap design because of the problems that it can cause with bag life. The bottom cuff failure can be avoided and bag life extended by using the Wheelabrator strapped bag design. There is no reason that Doe Run cannot change to the Gore-style bag and modify the baghouse to accept the strapped bag and achieve higher efficiency with double the bag life. Changing to the strapped bag design with polyester bags should also have the benefits of extended bag life. This is estimated to add $75,000 to $100,000 additional cost.

The estimated cost of a Gore bag is $115/bag, and the bags can be installed in approximately 5 working days at a labor cost of approximately $45,000. The total cost for to replace the 5,824 existing bags with new Gore bags is $815,000, which includes an allowance of $100,000 for strapped bag design for extended life.

5.3 TOTAL HYDROCARBON COMPLIANCE

5.3.1 Existing Blast Furnace Operations and Observations

Doe Run owns and operates one blast furnace to produce elemental lead as a secondary lead smelter. The blast furnace, designated F.S. 3130, is a vertical, water-cooled furnace that was originally used as a primary lead smelter. It is now used to produce molten lead from reclaimed batteries, ballistic sand, lead-lined television screens, lead shielding from x-ray equipment, lead paint chips, and other lead-containing products. The blast furnace is charged with a mixture of coke, lead oxide, and lead products. Heat for the process is provided by the combustion of the coke in the charge.

Air is provided for combustion, along with approximately 10 percent additional pure oxygen. The combustion of the coke is incomplete, so carbon monoxide (CO) is produced. This CO serves to provide the reducing atmosphere for the reduction of the lead oxide to lead.

The furnace is charged at the top through charging doors that are fed from a belt conveyor. The combustion gases pass up through the charge, preheating it, and cooling the combustion gases. The charge opening also inspirates air into the exhaust stream. Recent testing conducted by Doe Run in February 1999 shows the flow in blast furnace exhaust is approximately 55,000 ACFM at 68 F, which is essentially the SCFM flow rate. This flow includes combustion gases and air inspirated into the charge door and hoods. Since the furnace was originally used as a primary blast furnace, the inspirated air quantity is much larger than that for a furnace designed as a new secondary lead smelter.

In addition to the significantly higher airflow rate, the blast furnace has some other mechanical aspects that are common to primary lead smelting but cause operational problems when used in secondary lead smelting. To begin with, the tuyeres used to feed combustion air into the burning mass to sustain combustion are approximately 18 inches apart. Normal spacing in secondary lead smelting operations is significantly less than 18 inches.

Although Doe Run has demonstrated compliance with the limitation of 360 ppm as set forth in 40 CFR §63.543, it has difficulty in meeting this limit continuously as recorded by the CEM in the main baghouse stack. Due to the age of the furnace and the extensive rework that would be required to correct these mechanical aspects, IES does not recommend "repairing" the furnace to meet the MACT Standards.

Finally, due to the present location of the blast furnace in relation to the reverberatory furnace and the excessive exhaust airflow, co-mingling the blast furnace exhaust with the reverberatory furnace exhaust is impractical. By co-mingling the exhausts, the Total Hydrocarbons (THC) in the blast furnace could be reduced, potentially eliminating the need for an afterburner.

5.3.2 Installing an Afterburner on the Existing Blast Furnace

The first option reviewed was to install a new afterburner after the existing blast furnace. This option includes an afterburner that would take the furnace exhaust to 1,450 F to destroy the THCs. After the burner, a cooling section would be added to reduce the exhaust gas temperature to approximately 550 F before discharge to the existing cooling chamber. It was assumed the existing chamber could handle the combustion byproducts if they were discharged at 550 F. If this option is chosen, further review of the cooling chamber will be required.

Three components are required for proper combustion of THC: temperature, time, and turbulence. Since no residence time is specified in the MACT Standard, IES recommends providing a minimum residence time of 1 second at 1,400 F. This residence time should be more than adequate for controlling the THC emissions from the blast furnace and meeting the MACT requirements. Turbulence is obtained by designing the system to thoroughly mix the gases and products of combustion.

The airflow measured at the outlet of the blast furnace is the basis for the system design. If the system is designed for this flow, the afterburner parameters will be as indicated below.

Afterburner Design Parameters

Parameter	Units	Quantities
Airflow	SCFM	55,000
Burner Capacity	MMBTU/hr	58.5
Afterburner Vessel Volume	cu ft	5,385

System Design Considerations

The conditions in which the afterburner system will be operating are difficult. Potential concerns include:

1. Particulate fouling of the system and abrasion of refractories
2. SO_2 and HCl content of the gases attacking the materials of construction
3. CO content of the blast furnace exhaust may be high enough to cause burn back, which will manifest itself as puffing or explosions, depending on the concentration and the duct configuration

The particulate fouling of the system can be controlled by good design. IES recommends a down flow afterburner, with the burners at the top on a platform. The afterburner should be provided with an access door at the bottom for periodically cleaning out accumulated particulate matter. Alternatively, the afterburner could be provided with a hopper bottom and an air lock. However, construction of this type of system will be difficult due to the elevated temperatures and chemical resistance requirements.

Particulate abrasion and attack from SO_2 and HCl can be controlled by careful materials selection. The refractory liner should probably be a hard type, and any refractory supports or anchors should be reviewed to see if Inconel or other resistant alloys are required.

The CO content of the blast furnace gases is a concern. If the CO content is relatively high, then there may be a flammable mixture in the duct from the blast furnace to the afterburner. This mixture could be ignited by the afterburner and burn back, causing pulsing or an explosion. If this is the case, a flame arrester and explosion venting doors will be required.

Alternatively, if the blast furnace can be sealed to ensure that there is very little oxygen in the exhaust, air can be safely added in the afterburner to provide sufficient oxygen for combustion. This alternative can probably reduce capital and operating costs, as it would reduce the quantity of air processed in the afterburner. The oxygen content is approximately 19 percent, which is on the border of providing a stable flame. Depending on moisture content, this change could reduce propane gas operating costs by approximately 40 percent. Further investigation of the CO content of the blast furnace exhaust gas is recommended, along with an investigation of potential methods of providing sealing at the charge opening.

Cooling System Requirements

The cooling system must cool the gases exiting the afterburner from approximately 1,400 F to approximately 550 F prior to the existing cooling chamber. The exhaust must then be further cooled to approximately 250 F in the existing cooling chamber prior to entering the baghouse. The baghouse is capable of withstanding temperatures up to 250 F (or 350 if new bags are installed as recommended). The cooling required is approximately 50 MMBTU/hr. Doe Run has had success with a sonic cooler for the reverberatory furnace exhaust gas cooling. For comparative purposes, IES has estimated a sonic cooler for the cooling of the blast furnace gases, although there are several options available that should be reviewed carefully if this option is pursued. As with the afterburner, materials of construction, particularly acid resistance, is a major concern.

Energy and Environmental Impacts

To meet the MACT Standard of 360 ppm, IES calculates that 9.5 pounds per hour (lb/hr) or 41.6 tons of THC has to be removed from the exhaust gas stream. During this THC removal process, IES estimates that approximately 32 tons per year (tpy) of carbon monoxide (CO) and 36 tpy of oxides of nitrogen (NO_x) will be formed and emitted to outdoor atmosphere. In addition, there will also be a small amount of products of incomplete combustion (PICs) emitted to outdoor air. Furthermore, the afterburner will consume 728,500 Mcf of propane and 565,000 kilowatt hours of electricity to overcome additional pressure drops. The total installed cost is estimated at approximately $3 million. IES does not see any significant environmental benefit in installing an afterburner because of the large amount of the byproducts generated, the high energy requirements, and high capital cost.

5.3.3 Installing One/Two Blast Furnaces Equipped with Afterburner(s)

IES reviewed the feasibility of installing one or two new blast furnaces at the Boss Facility to replace the existing blast furnace currently in operation.

A new blast furnace designed for secondary lead smelting would be smaller in size and designed to handle a more diverse charge, produce product at lower cost, and meet the MACT requirements with less energy expenditure. It would also be more efficient because it exhausts a significantly smaller (in this case almost 5 times less) exhaust airflow, which greatly reduces the size of the afterburner. This compact size and more efficient operation would allow Doe Run to process a more diverse charge with significantly reduced exposure to exceeding emission limits.

Also, the new furnace(s) could be located in close proximity to the reverberatory furnace, which could allow the two exhaust streams to be co-mingled. The co-mingling of the furnace exhausts could reduce the THC emission, potentially eliminating the need for an afterburner. However, for this to occur, the reverberatory furnace would have to be running whenever the blast furnace(s) are running, or afterburners would have to be installed as backup units. In order to provide flexibility, IES has included two new afterburners, one for each blast furnace to meet the MACT THC requirements. Each afterburner will be sized to handle furnace exhaust gas flow rate of 10,000 ACFM and will use propane as auxiliary fuel. The system will be ducted and permitted in such a way that if the reverberatory furnace is operating the afterburners will not be, thus reducing energy costs. The exhausts from these afterburners will be ducted to a gas cooler to reduce the gas temperature to below 400F prior to mixing with the other gas streams and entering into the baghouse system.

IES believes that one afterburner with a volumetric turndown range of 2:1 can serve both blast furnaces and be designed to continuously meet the THC requirements. There is a slight possibility that the gas cooler can be eliminated or substantially reduced in size because the airflow from the process fugitive sources may be able to cool the total exhaust temperature to a level that the bags in the baghouse system can withstand. The detailed analysis should be conducted during the engineering phase of the project to determine the feasibility of installing only one afterburner and either eliminating or reducing the size of the gas cooler. A dropout chamber may be required depending on the final gas temperature. If these efforts are successful, the capital cost of project can be reduced significantly. The blast furnace(s) will be considered a new source and hence will be required to comply with the 20 ppm THC limitation for collocated furnaces. For the purposes of the cost estimate, IES assumed the installation of two blast furnaces and one gas cooler.

Blast furnace technology is old and very popular in the USA, and operators are very familiar with its operation. The capital outlay for two blast furnaces, each rated at a capacity of 75 tpd, is more than $3 million.

One of the major drawbacks of blast furnaces is that they are regulated under the MACT Standards and required to demonstrate continuous compliance through monitoring and recordkeeping systems.

5.3.4 Installing Two Rotary Furnaces vs a Blast Furnace

This option evaluates the feasibility of installing two rotary furnaces to phase out the use of the existing large blast furnace. Two rotary furnaces, each with a capacity of 75 tpd, will be installed.

Rotary furnaces consist of a steel drum that is 6 to 14 feet in diameter and 8 to 19 feet in length. The drum is refractory-lined and mounted on rollers. Variable-speed motors rotate the drum. The charge material and refractory lining on the drum are heated with an oxygen-enriched natural gas or fuel oil jet at one end.

Rotary furnaces are operated on a batch basis, with each batch taking 5 to 12 hours to process, depending on the size of the furnace. A sliding door at the end of the furnace allows charging of the furnace.

Rotary furnaces are not subject to the MACT THC Standard, thus eliminating the need for afterburners. These furnaces are operated in a batch mode, providing the flexibility to adjust the amount of fluxing agents. Rotary furnaces are very popular in Europe and are efficient in producing product at low cost. The capital outlay for two furnaces is more than $5 million. Therefore, it appears that the incremental investment of installing two rotary furnaces vs. two blast furnaces will be approximately 6 years. Although installing the rotary furnaces is not economically attractive, this option must be discussed with the operations personnel to determine whether the better product quality, the ability to handle diverse raw materials, and other regulatory factors justifies the excess cost.

6.0 CAPITAL AND OPERATING COSTS

6.1 FURNACE EQUIPMENT COSTS

IES has estimated equipment costs for the three system options. Equipment includes afterburners, evaporative coolers, piping, pumps, stack, associated controls, and freight as applicable. A summary of the operating cost assumption is presented in Table 6.1 and a summary of the capital and operating costs of the three systems is presented in Table 6.2. These costs should be considered for comparative purposes to select the best system to achieve compliance with the MACT THC Standards. Detailed cost breakdowns are shown in Appendix D.

TABLE 6-1
Operating Cost Assumptions

Item	Cost	Units
Electricity	$0.039*	Per KWH
Propane	$0.39	Per MCF
Labor	$14.50	Per Hr
Annual Operating Hours	6,600	Hr/yr

*Average of summer and winter electric costs.

TABLE 6-2
Capital and Operating Costs

Item	Capital Cost	Yearly Operating Cost
New Afterburner on Existing Blast Furnace	$3,158,000	$3,152,000
Two (2) New Blast Furnaces and Afterburners	$3,152,000	$663,000
Two (2) New Rotary Furnaces	$5,688,000	$375,000

It is clear that an afterburner on the existing blast furnace is both very expensive to install and operate.

It appears that installing two blast furnaces with afterburners is the logically economic choice to pursue. Attempts should be made during the engineering phase of this project to install only one afterburner for both furnaces and a properly sized gas cooler to reduce the capital cost of the project.

6.2 CAPTURE SYSTEM COSTS

IES has estimated the capital costs for the three capture system options in Table 6.3. The costs shown below include upgrading the existing baghouse system with gore bags that will increase the airflow capacity as well as enhance lead particulate removal. Detailed cost breakdowns are shown in Appendix D.

TABLE 6-3
Capture System Capital Costs

Item	Capital Cost
OPTION 1 - Local Capture	$2,060,000
OPTION 2 - Global Capture	$2,370,000
OPTION 3 - Local & Global Capture	$2,436,000

The annual operating costs for each of the above options are the same. The increase in operating costs are due to the increased air requirements. The operating costs for the additional horsepower consumption is calculated to be $135,000 annually.

7.0 PERMITTING

Upgrading the existing baghouse system and installing one or two new furnaces at the Doe Run facility will require a construction permit from the Missouri Department of Natural Resources (Department), the issuance of which may take three to four months after submission of a complete application. In addition, Doe Run will be required to amend its Title V operating permit application, which is currently pending with the Department, to incorporate these changes. Therefore, it may be prudent to identify the noncompliance issues in the Title V application and present a compliance plan along with a schedule to obtain the permit shield and to expedite receipt of the operating permit.

8.0 RECOMMENDATIONS

Based on the results of the feasibility study, IES recommends the following:

THC COMPLIANCE

1. Aggressively pursue an alternate testing and monitoring method or THC Emission Limit for the existing blast furnace with the EPA and the Department to demonstrate continuous compliance with the THC Standard of 360 ppm. The potential for obtaining an alternate emission limit is low unless the Rule is opened through legal channels.

2. If the negotiating efforts with the agencies are unsuccessful, then install either two new, well-designed blast or rotary furnaces to meet production requirements and the MACT Standard.

   Even though MACT THC Standards do not apply to rotary furnaces, the capital cost for these furnaces is significantly higher than for blast furnaces and the payback period on the incremental investment is more than 6 years. This makes the blast furnaces more economically attractive, but this issue must be thoroughly discussed with the operations personnel to determine whether the rotary furnaces will provide better product quality that can result in larger profit margins and the ability to handle diverse raw materials before a final decision on the type of furnace is made.

PROCESS FUGITIVE EMISSION COMPLIANCE

1. Install a hybrid system of local and global capture to achieve compliance with the process fugitive standards. IES recommends this option even though it has a higher capital cost than either the local or global systems alone. The reason for recommending this option is that it provides flexibility in equipment and material handling and reduces lead exposures to plant workers. It basically utilizes the advantages of both the local and global capture systems. IES does not recommend the global capture system because of the higher airflow requirements that push the capability of the baghouse and the higher potential for lead exposure to the plant workers, nor the local capture system because it is not flexible for equipment and material handling and has the potential for being damaged during operations. The operating costs for all three options are similar because the additional air requirements are similar.

2. Upgrade the main baghouse to increase its capacity from 450,000 cfm to 602,000 cfm by changing the polyester bags to high-efficiency gore or other coated bags, which will enhance the removal of lead particulate.

3. Change the baghouse's bag support design to obtain longer bag life. This can be accomplished by changing from a can style hung bag to a strapped style hung bag.

PERMITTING

1. Obtain the construction permits for installing the new blast or rotary furnaces and upgrading the capture and baghouse system from the Department.

2. Amend the Title V operating permit application, which is currently pending with the Department, to incorporate the equipment changes to achieve compliance with the MACT Standards. The amendments should also address the MACT noncompliance issues, the compliance plan along with the schedule in order to obtain the permit shield and expedite the Title V permit's issuance.

9.0 PROJECT SCHEDULE

The detailed project schedule to execute the installation of the new blast/rotary furnaces and to upgrade the baghouse and capture system is shown below.

The Doe Run Company
MACT Compliance Project
IES Job No. 165.9902

ID	Task Name	Duration
1	Concept Report Issued	1d
2	Concept Report Reviewed	2w
3	Comments Submitted to IES	1w
4	Comments Incorporated into Report	2w
5	Concept Report Finalized	1d
6	Authorization to Proceed with Preliminary Engineering	1d
7	Preliminary Engineering	8w
8	Guaranteed Maximum Price (GMP) Proposal Submitte	1d
9	GMP Reviewed	2w
10	Authorization to Proceed with GMP	1d
11	Major Equipment Ordered	2w
12	Shop Drawings	4w
13	Major Equipment Delivery	32w
14	Environmental Permitting	8w
15	Final Engineering	24w
16	Environmental Permit Submitted	1d
17	Permit Reviewed	16w
18	Permit Approved	1d
19	Contracts Bid	6w
20	Bid Award	4w
21	Mobiliization	2w
22	Installation	24w
23	Start-up and Comissioning	4w
24	System Check-out	4w

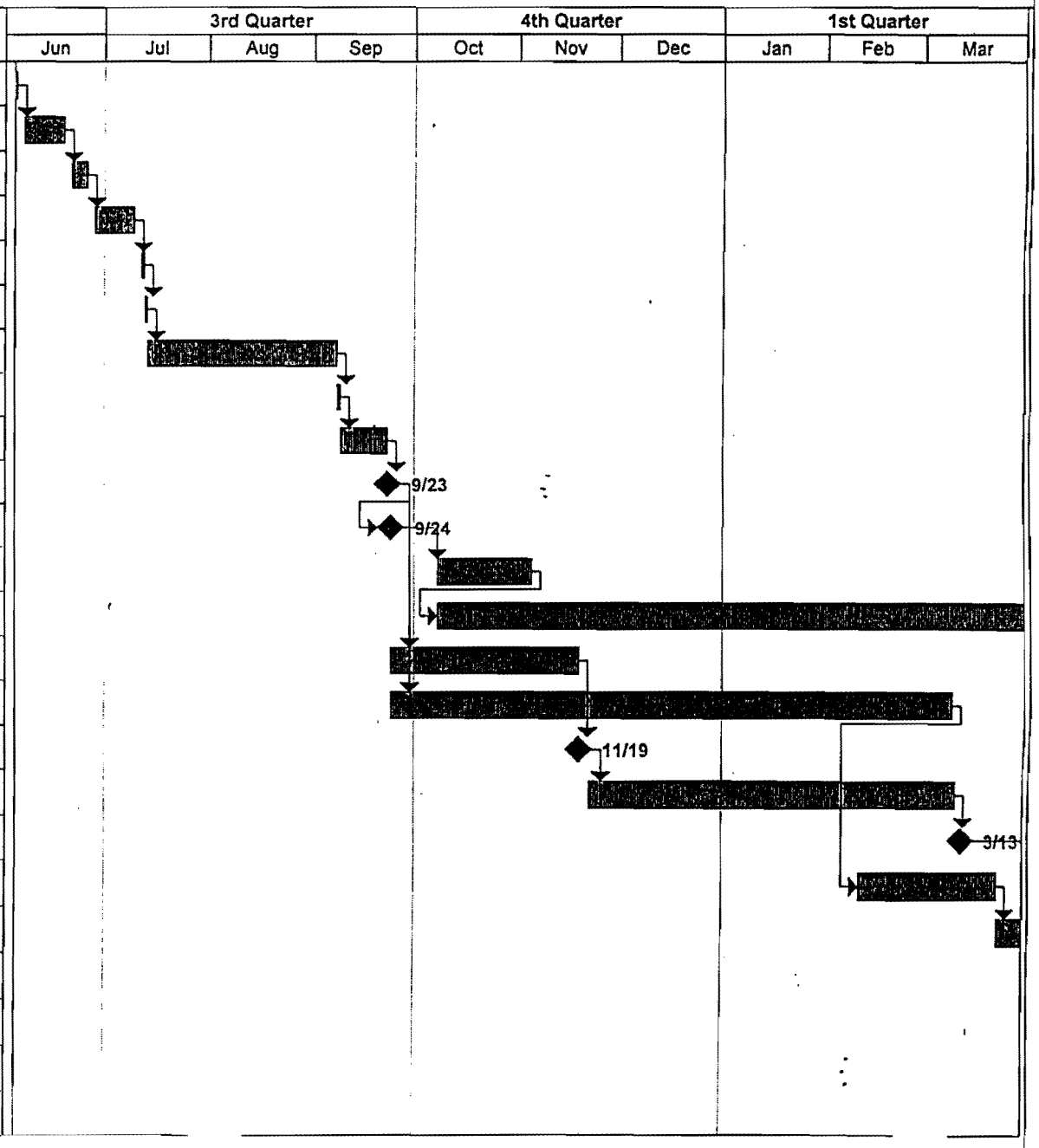

The Doe Run Company
MACT Compliance Project
IES Job No. 165.9902

ID	Task Name	Duration
1	Concept Report Issued	1d
2	Concept Report Reviewed	2w
3	Comments Submitted to IES	1w
4	Comments Incorporated into Report	2w
5	Concept Report Finalized	1d
6	Authorization to Proceed with Preliminary Engineering	1d
7	Preliminary Engineering	8w
8	Guaranteed Maximum Price (GMP) Proposal Submitte	1d
9	GMP Reviewed	2w
10	Authorization to Proceed with GMP	1d
11	Major Equipment Ordered	2w
12	Shop Drawings	4w
13	Major Equipment Delivery	32w
14	Environmental Permitting	8w
15	Final Engineering	24w
16	Environmental Permit Submitted	1d
17	Permit Reviewed	16w
18	Permit Approved	1d
19	Contracts Bid	6w
20	Bid Award	4w
21	Mobiliization	2w
22	Installation	24w
23	Start-up and Comissioning	4w
24	System Check-out	4w

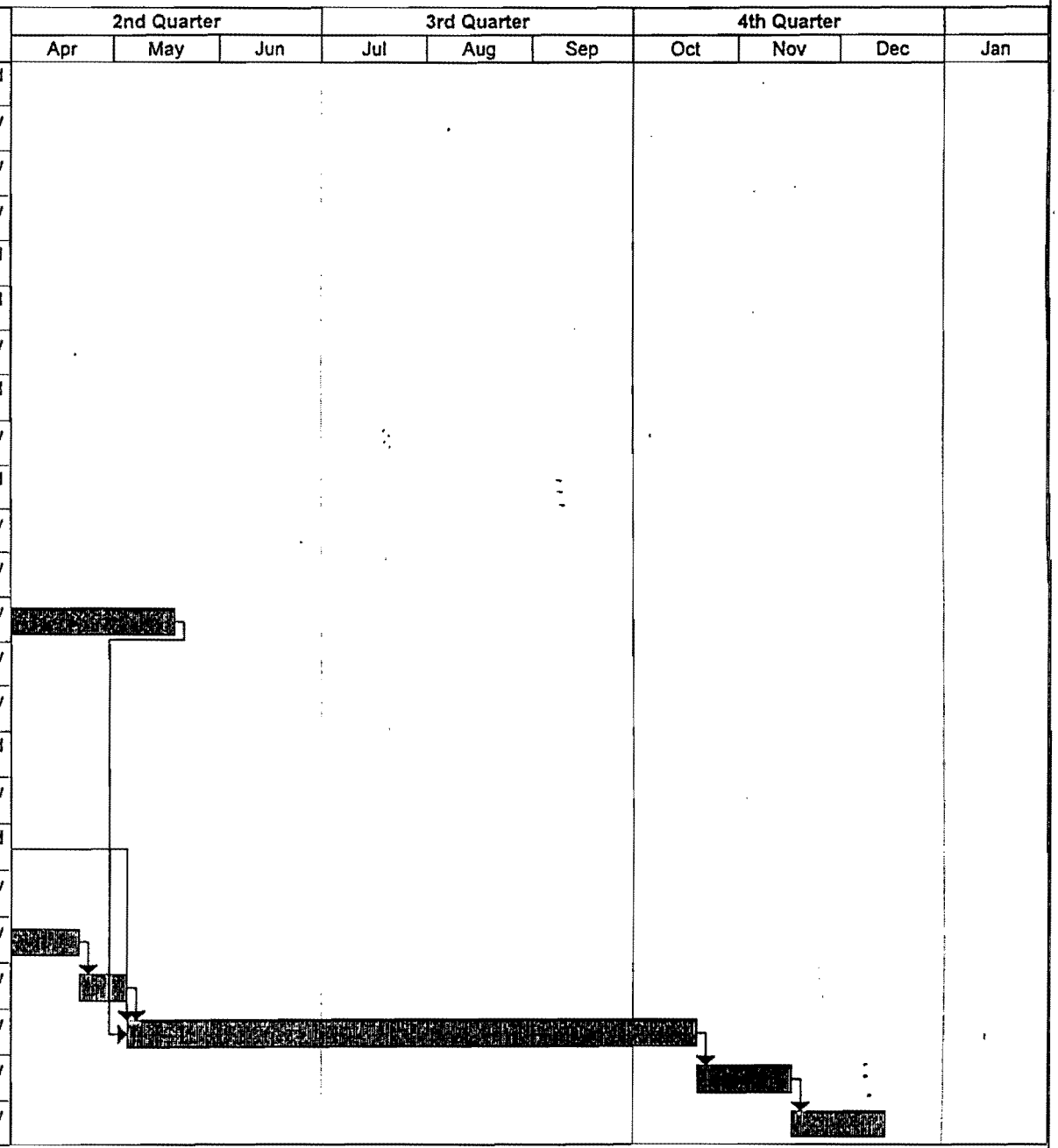

The Doe Run Company
MACT Compliance Project
IES Job No. 165.9902

Project: concept.MPP
Date: Fri 6/4/99

Task		Summary		Rolled Up Progress	
Progress		Rolled Up Task			
Milestone	◆	Rolled Up Milestone	◇		

APPENDIX A

TEST RESULTS

TABLE OF CONTENTS

- BLAST FURNACE EXHAUST
- REVERBERATORY FURNACE EXHAUST
- SWEAT FURNACE EXHAUST
- DUST FURNACE EXHAUST

- BLAST FURNACE HYGIENE
- REFINERY KETTLES
- ROTARY MELTER HYGIENE
- DUST FURNACE DUCT
- COOLING CHAMBER CALCULATION

IES ENGINEERS
CALCULATION SHEET

CLIENT:	DOE RUN	DATE:	5/20/99
PROJECT NO.:	165.9902	BY:	FJS
TITLE:	LOCAL CAPTURE REQUIREMENTS	REV	1
SUBJECT:	HYGIENE VENTILATION		

EQUIPMENT	MACT VEL. FPM	AREA S.F.	QTY	AIR SCFM	NOTES
KETTLES					
DROSS KETTLE	250	24	3	18,000	(1)(3)
BURN KETTLE	250	24	2	12,000	(1)(3)
REFINERY KETTLE	250	24	11	66,000	(1)(3)
				96,000	TOTAL
REVERB FURNACE					
HYGIENE CANOPY	200	1200	1	240,000	
HYGIENE HOODS	300	6	3	5,400	
TAP CHUTE	300	17	1	5,100	
				250,500	TOTAL
SWEAT FURNACE					
CHARGING CANOPY	300	81	1	24,300	(2)
TAP & MOLD CANOPY	300	24	2	14,400	
				38,700	TOTAL
TOTAL HYGIENE VENTILATION REQUIREMENTS				385,200	TOTAL

NOTES:

(1) THE EXISTING KETTLE HOOD DESIGN WAS USED FOR AIR FLOW CALCULATIONS

(2) THERE ARE A TOTAL OF FOUR (4) CHARGING DOORS. AIR FLOW IS CALCULATED ON THE BASIS OF ONE CHARGING DOOR OPENED AT A TIME AND A CONTROL DAMPER BEING USED TO DIRECT THE HOOD DRAFT.

(3) THE EXISTING KETTLE HOODS ARE MODIFIED TO MEET MACT FACE VELOCITY

IES ENGINEERS
CALCULATION SHEET

CLIENT:	DOE RUN	DATE:	5/15/99
PROJECT NO.:	165.9902	BY:	FJS
TITLE:	LOCAL CAPTURE REQUIREMENTS	REV.	0
SUBJECT:	HYGIENE VENTILATION		

EQUIPMENT	MACT VEL. FPM	AREA S.F.	QTY	AIR SCFM	NOTES
KETTLES					
DROSS KETTLE	250	47	3	35,250	(1)
BURN KETTLE	250	47	2	23,500	(1)
REFINERY KETTLE	250	47	11	129,250	(1)
				188,000	TOTAL
REVERB FURNACE					
HYGIENE CANOPY	200	1200	1	240,000	
HYGIENE HOODS	300	6	3	5,400	
TAP CHUTE	300	17	1	5,100	
				250,500	TOTAL
SWEAT FURNACE					
CHARGING CANOPY	300	81	1	24,300	(2)
TAP & MOLD CANOPY	300	24	2	14,400	
				38,700	TOTAL
TOTAL HYGIENE VENTILATION REQUIREMENTS				477,200	TOTAL

NOTES:

(1) THE EXISTING KETTLE HOOD DESIGN WAS USED FOR AIR FLOW CALCULATIONS

(2) THERE ARE A TOTAL OF FOUR (4) CHARGING DOORS. AIR FLOW IS CALCULATED ON THE BASIS OF ONE CHARGING DOOR OPENED AT A TIME AND A CONTROL DAMPER BEING USED TO DIRECT THE HOOD DRAFT.

ES ENGINEERS, INC.
DATA SHEET

CLIENT:	DOE RUN	DATE:	4/23/99
PROJECT NO.:	165.9902	BY:	FJS/REM
TITLE:	AIR FLOW SURVEY	TEMP=	123.5 F
SUBJECT:	LOCATION - BLAST FURNACE EXHAUST	DUCT SIZE	72"X48" (24 S.F.)

LOC	POINT	VEL (FPM)	LOC	POINT	VEL (FPM)
1	1	1590	2	1	3564
	2	2167		2	4065
	3	3489		3	3924
	4	3323		4	3956
	5	3175		5	3932
	6	2925		6	2877
	7	2134		7	2354
	8	1948		8	2364
	9	2139		9	1549
	10	1409		10	1471
	11	1497		11	1150
	12	1122		12	1083
	13	339		13	700
	14	328		14	600
	15	457		15	759
1	TOT VEL	28042	2	TOT VEL	34348
1	AVE VEL	1869	2	AVE VEL	2290

LOC.	PT.	VEL (FPM)	LOC.	PT.	VEL (FPM)
3	1	3891	4	1	4455
	2	4111		2	3997
	3	4097		3	4175
	4	3980		4	2253
	5	3850		5	1963
	6	3793		6	2266
	7	2541		7	882
	8	1888		8	1163
	9	768		9	525
	10	837		10	944
	11	1018		11	1846
	12	765		12	517
	13	431		13	617
	14	492		14	464
	15	526		15	517
3	TOT VEL	32988	4	TOT VEL	26584
3	AVE VEL	2199	4	AVE VEL	1772

IES ENGINEERS, INC.
DATA SHEET

CLIENT:	DOE RUN	DATE:	4/23/99
PROJECT NO.:	165.9902	BY:	FJS/REM
TITLE:	AIR FLOW SURVEY	TEMP=	123.5 F
SUBJECT:	LOCATION - BLAST FURNACE EXHAUST	DUCT SIZE	72"X48" (24 S.F.)

LOC	POINT	VEL (FPM)	LOC	POINT	VEL (FPM)
5	1	3840	6	1	3844
	2	4108		2	3435
	3	4676		3	3737
	4	3934		4	3429
	5	4149		5	3740
	6	3817		6	3051
	7	3247		7	3069
	8	2633		8	2120
	9	2687		9	1874
	10	1551		10	1295
	11	669		11	1759
	12	1281		12	1663
	13	1363		13	971
	14	1849		14	594
	15	415		15	461
5	TOT VEL	40219	6	TOT VEL	35042
5	AVE VEL	2681	6	AVE VEL	2336

LOC.	PT.	VEL (FPM)	LOC.	AVE. VEL (FPM)
7	1	3097	1	1869
	2	3307	2	2290
	3	3129	3	2199
	4	2891	4	1772
	5	2217	5	2681
	6	2572	6	2336
	7	2196	7	2139
	8	2526		
	9	1357	TOT VEL	15287
	10	1836	AVE VEL	2184
	11	1741		
	12	1340	ACFM=	52413
	13	1535	MASS FLOW RATE (PPH)=	213882
	14	1271		
	15	1068		
7	TOT VEL	32083		
7	AVE VEL	2139		

IES ENGINEERS, INC.
DATA SHEET

CLIENT:	DOE RUN	DATE:	4/23/99
PROJECT NO.:	165.9902	BY:	FJS/REM
TITLE:	AIR FLOW SURVEY	TEMP=	161.3 F
SUBJECT:	LOCATION - REVERB HYGIENE	DUCT SIZE=	57 INCH DIAM.

FAN LOCATION (FAN A) AREA= 17.72 SQ. FT.

LOC.	PT.	VEL (FPM)	LOC.	PT.	VEL (FPM)
SIDE	1	1992	TOP	1	1369
	2	2640		2	1008
	3	2695		3	3039
	4	2861		4	3230
	5	2738		5	3007
	6	2895		6	3149
	7	2804		7	3303
	8	2486		8	3308
	9	3287		9	2886
	10	3464		10	3217
	11	3077		11	2881
	12	3404		12	3248
	13	3227		13	2321
	14	3199		14	2240
	15	3071			
1	TOT VEL	43840	2	TOT VEL	38206
1	AVE VEL	2923	2	AVE VEL	2729

TOTAL AVE. VELOCITY POINTS 1 & 2=	2826
SCFM=	50074
TEMPERATURE CORRECTION=	1.17
ACFM=	58700
MASS FLOW RATE (PPH)=	224964

APPENDIX B.

CONSENT ORDER

BEFORE THE AIR CONSERVATION COMMISSION
STATE OF MISSOURI

DOE RUN COMPANY RESOURCE	)	
RECOVERY FACILITY	)	
CONSENT ORDER	)	NO._____
RESPECTING LEAD EMISSIONS	)	

STIPULATION AND ORDER

COME NOW The Doe Run Company (Doe Run) and the Missouri Department of Natural Resources (MDNR) and stipulate as follows:

1. This Consent Order and Stipulation modifies and supersedes the previous Stipulation executed by Doe Run and the MDNR and entered by the Missouri Air Conservation Commission (Commission) on March 31,1994.

2. In accordance with the federal Clean Air Act, 42 U.S.C. § 7401, et seq., as amended, the State of Missouri submitted a State Implementation Plan for the attainment and maintenance of the National Ambient Air Quality Standard for Lead in the air quality control region located in the vicinity of Doe Run's Resource Recovery Facility which smelter is located near Bixby, Iron County, Missouri (the facility).

3. Pursuant to the federal Clean Air Law, 42 U.S.C. § 7401, et seq., as amended, the State of Missouri is in the process of revising said State Implementation Plan, which revision the state will submit to the EPA for its review and approval.

4. The parties, by their signatures hereto, acknowledge that they have read and understand the terms of this Stipulation and Order and agree to be bound thereby. The parties further acknowledge and agree that the terms of the Order may be enforced by suit

for injunctive relief and/or civil penalties pursuant to § 643.151, RSMo, as amended. The parties further agree and acknowledge that this Stipulation and Order is binding upon the parties hereto, their successors, assigns, agents, and employees.

5. Doe Run's Resource Recycling Facility consists of a lead smelter that may operate on either a primary or secondary feed stock and a resource recycling operation.

6. Since 1990, the air monitoring demonstrates that the facility meets the National Ambient Air Quality Standard for lead as specified in 40 C.F.R. 50.12.

ORDER

This matter comes before the Commission on the stipulation of the parties and after public comment and a public hearing, the Commission having jurisdiction over the subject matter and the parties hereto pursuant to § 643.050, RSMo, as amended, being fully advised in the premises:

IT IS HEREBY ORDERED that, in order to demonstrate attainment and maintenance of the National Ambient Air Quality Standard for lead as specified in 40 C.F.R. 50.12, Doe Run shall:

A. In the event the air quality data for any calendar quarter following October 3, 1995 (the attainment date for the National Ambient Air Quality Standard for lead), exceeds said National Ambient Air Quality Standard for lead as specified in 40 C.F.R. § 50.12, the MDNR will notify Doe Run. Doe Run shall then implement the following contingency control measures sixty (60) days from the date of its receipt of MDNR's

notification:

(1.) Pave the remainder of the employee parking area northwest of the Doe Run administrative building.

(2.) Increase the frequency of facility roadway sweeping and washdown to two (2) shifts daily.

(3.) Replace bags in the main baghouse compartment number 1 with Teflon coated bags to improve ventilation capacity to the furnace process.

(4.) If the National Ambient Air Quality Standard for lead has not been achieved within the first full quarter following installation of Teflon-coated bags in main baghouse compartment number 1, Doe Run shall replace the main baghouse compartment number 8 bags with Teflon-coated bags during the next full quarter.

(B) Other requirements:

(1.) Doe Run shall maintain the fence or use some other physical barrier to enclose the Doe Run property within the 1.5 ug/m^3 isopleth for its current resource recovery operations.

(2) Doe Run shall comply with the provisions at 10 CSR 10-6.120(2)(C), as amended.

The schedule set forth above will not apply in the event Doe Run does not

complete the emission control projects during the time periods specified above as the result of an Act of God , war, strike, riot or other catastrophe. The completion dates will be extended for the period of time corresponding to the time said circumstances are occurring. Doe Run shall have the burden of proof to establish that it is entitled to utilize the provisions of this paragraph.

THE DOE RUN COMPANY

By: Jay Z. Lyatt Date: 3/1/00

Title: Vice President Secondary Smelting

MISSOURI DEPARTMENT OF NATURAL RESOURCES

By: Date: 5-11-00

Title:

ENTERED:

MISSOURI AIR CONSERVATION COMMISSION

David C. Zimmermann
Chair

Michael R. Fournie
Vice Chair

Date: 4-27-00

APPENDIX C.

10 CSR 10-6.120 Restriction of Emissions of Lead from Specific Lead Smelter-Refinery Installations

APPENDIX C

CONCEPT
DRAWINGS AND FIGURES

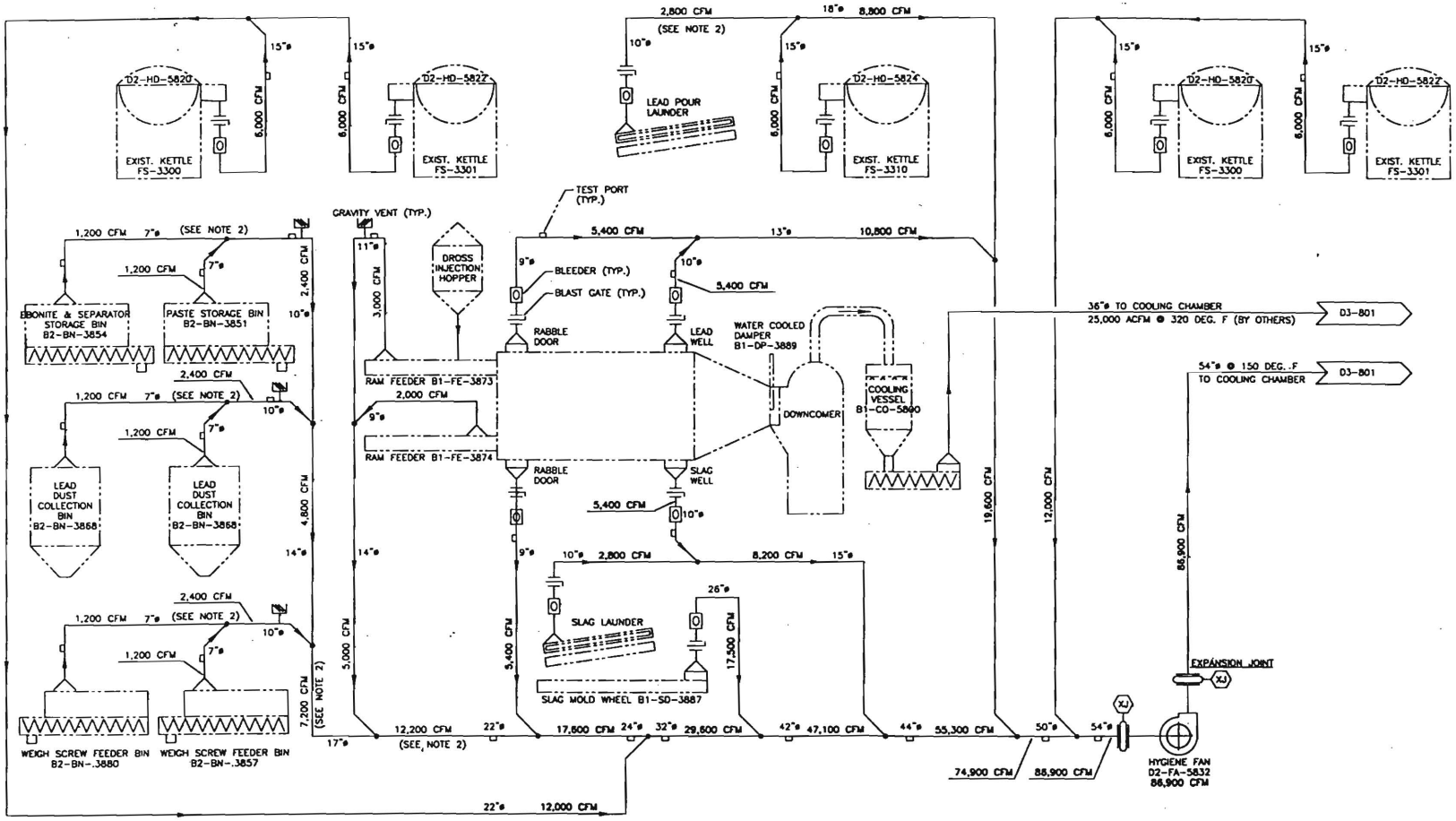

LEGEND

EXISTING

NEW

NOTES:

1. THIS DRAWING DOES NOT ADDRESS "OTHER COMMODOITIES" TO OR FROM KETTLES.
2. EXISTING DESIGN FLOWS, SEE REFERENCE DRAWING.
3. ALL DUCTWORK IS EXISTING.
4. REFERENCE DRAWING FLUOR DANIEL DRAWING NO. D2-800 REV. 0.

PRELIMINARY
NOT FOR CONSTRUCTION

ENGINEERS

ENGINEERING FOR INDUSTRY

REV.	DATE	DESCRIPTION	BY	APP
0	5-28-99	PRELIMINARY		

NOTE:
THE CONTRACTOR SHALL FIELD VERIFY ALL DIMENSIONS AND EXISTING CONDITIONS PRIOR TO PROCEEDING WITH ANY WORK. WHERE DISCREPANCIES OCCUR BETWEEN THESE DOCUMENTS AND EXISTING CONDITIONS, THE DISCREPANCY SHALL BE REPORTED TO THE OWNER AND/OR ENGINEER FOR EXPEDITING AND RESOLUTION.

CLIENT
THE DOE RUN COMPANY
BOSS, MISSOURI

PROJECT TITLE
FEASIBILITY STUDY
MACT COMPLIANCE FOR
SECONDARY LEAD SMELTER

DRAWING TITLE
LOCAL CAPTURE
PROCESS FLOW DIAGRAM

LAST UPDATE 5-27-99	ENGINEER FJS	IES REFERENCE No. 165.9902
DATE 5/25/99	DRAWER SM	CAD FILE No. 1652P103
SCALE NONE	DRAWING DRS	REVISION / WORK PLAN —

DRAWING NUMBER
103

REVISION LEVEL

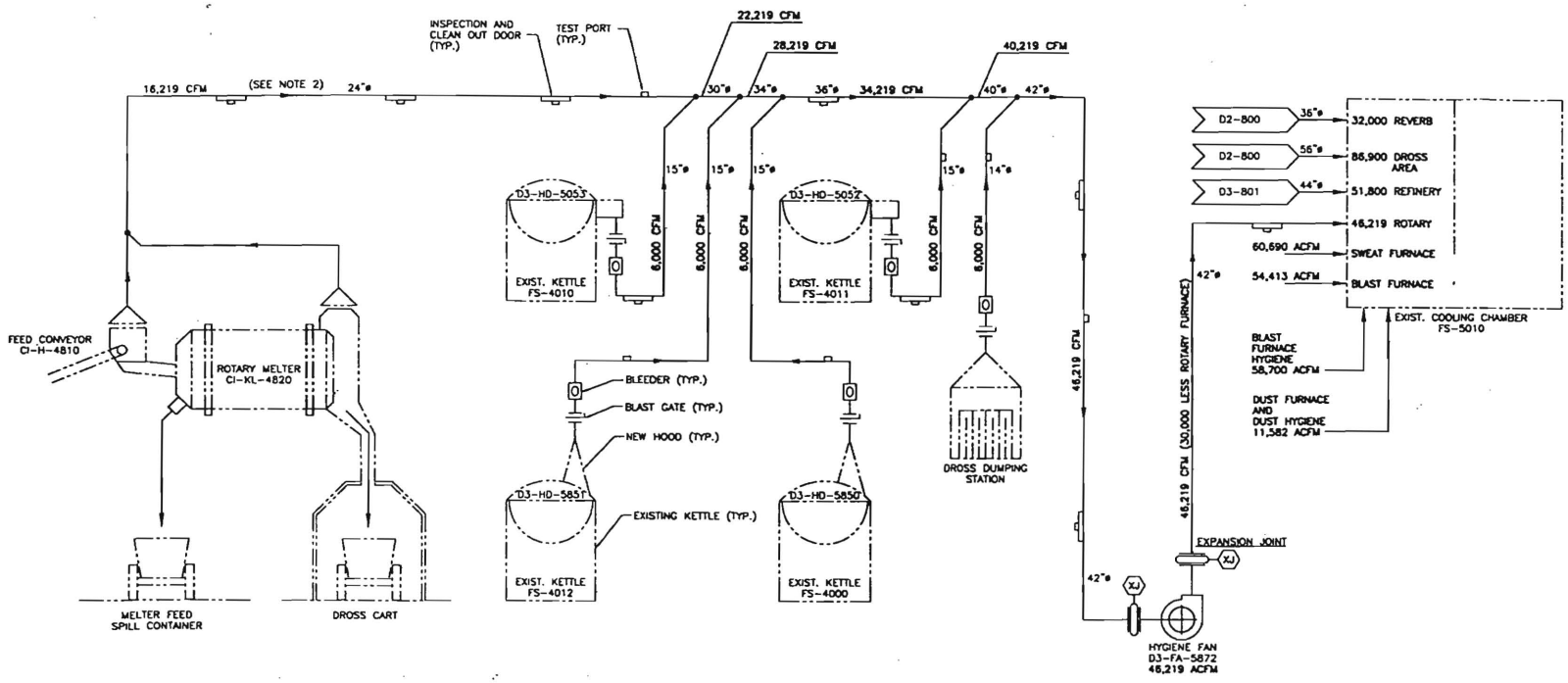

LEGEND

EXISTING

NEW

NOTES:

1. THIS DRAWING DOES NOT ADDRESS "OTHER COMMODOITIES" TO OR FROM KETTLES.
2. EXISTING DESIGN FLOWS, SEE REFERENCE DRAWING.
3. ALL DUCTWORK IS EXISTING.
4. REFERENCE DRAWING FLUOR DANIEL DRAWING NO. D3-800 REV. 1.

PRELIMINARY
NOT FOR CONSTRUCTION

IES ENGINEERS
ENGINEERING FOR INDUSTRY

REV	DATE	DESCRIPTION	BY	APP
0	5-28-99	PRELIMINARY		

NOTE:
THE CONTRACTOR SHALL FIELD VERIFY ALL DIMENSIONS AND EXISTING CONDITIONS PRIOR TO PROCEEDING WITH ANY WORK. WHERE DISCREPANCIES OCCUR BETWEEN THESE DOCUMENTS AND EXISTING CONDITIONS, THE DISCREPANCY SHALL BE REPORTED TO THE OWNER AND/OR ENGINEER FOR EXPEDITING AND RESOLUTION.

CLIENT
THE DOE RUN COMPANY
BOSS, MISSOURI

PROJECT TITLE
FEASIBILITY STUDY
MACT COMPLIANCE FOR
SECONDARY LEAD SMELTER

DRAWING TITLE
LOCAL CAPTURE
PROCESS FLOW DIAGRAM

LAST UPDATE 5-27-99	ENGINEER FJS	IES CONTRACT No. 165.9902
DATE 5/25/99	DESIGNER SM	FORD PLT No. 1652P102
SCALE NONE	DRAWN DRS	SHEET PAGE(S) —

DRAWING NUMBER
P102

REVISION LEVEL
—

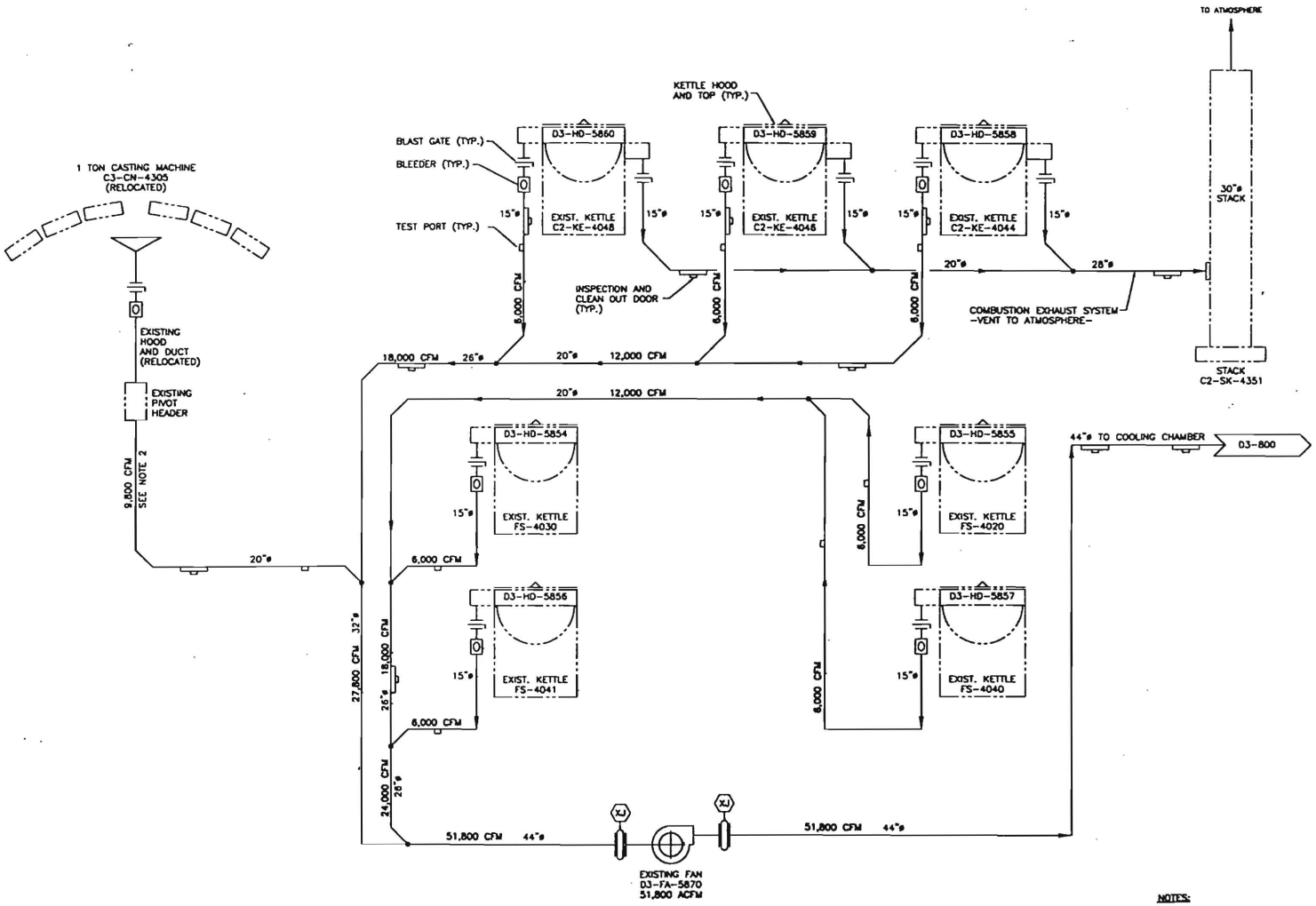

LEGEND

——— EXISTING
——— NEW

NOTES:

1. THIS DRAWING DOES NOT ADDRESS "OTHER COMMODDITIES" TO OR FROM KETTLES.
2. EXISTING DESIGN FLOWS, SEE REFERENCE DRAWING.
3. ALL DUCTWORK IS EXISTING.
4. REFERENCE DRAWING FLUOR DANIEL DRAWING NO. D3-801 REV. 0

PRELIMINARY
NOT FOR CONSTRUCTION

IES ENGINEERS
ENGINEERING FOR INDUSTRY

REV.	DATE	DESCRIPTION	BY	APP
0	5-28-99	PRELIMINARY		

NOTE:
THE CONTRACTOR SHALL FIELD VERIFY ALL DIMENSIONS AND EXISTING CONDITIONS PRIOR TO PROCEEDING WITH ANY WORK. WHERE DISCREPANCIES OCCUR BETWEEN THESE DOCUMENTS AND EXISTING CONDITIONS, THE DISCREPANCY SHALL BE REPORTED TO THE OWNER AND/OR ENGINEER FOR EXPEDITING AND RESOLUTION.

CLIENT
THE DOE RUN COMPANY
BOSS, MISSOURI

PROJECT TITLE
FEASIBILITY STUDY
MACT COMPLIANCE FOR
SECONDARY LEAD SMELTER

DRAWING TITLE
LOCAL CAPTURE
PROCESS FLOW DIAGRAM

LAST UPDATE 5-27-99	ENGINEER FJS	IES CONTRACT No. 165.9902
DATE 5-20-99	REDRAWN SW	CADD FILE No. 1652P101
SCALE NONE	DRAWN DRS	SHEET PLACED —

DRAWING NUMBER
P101

REVISION LEVEL
—

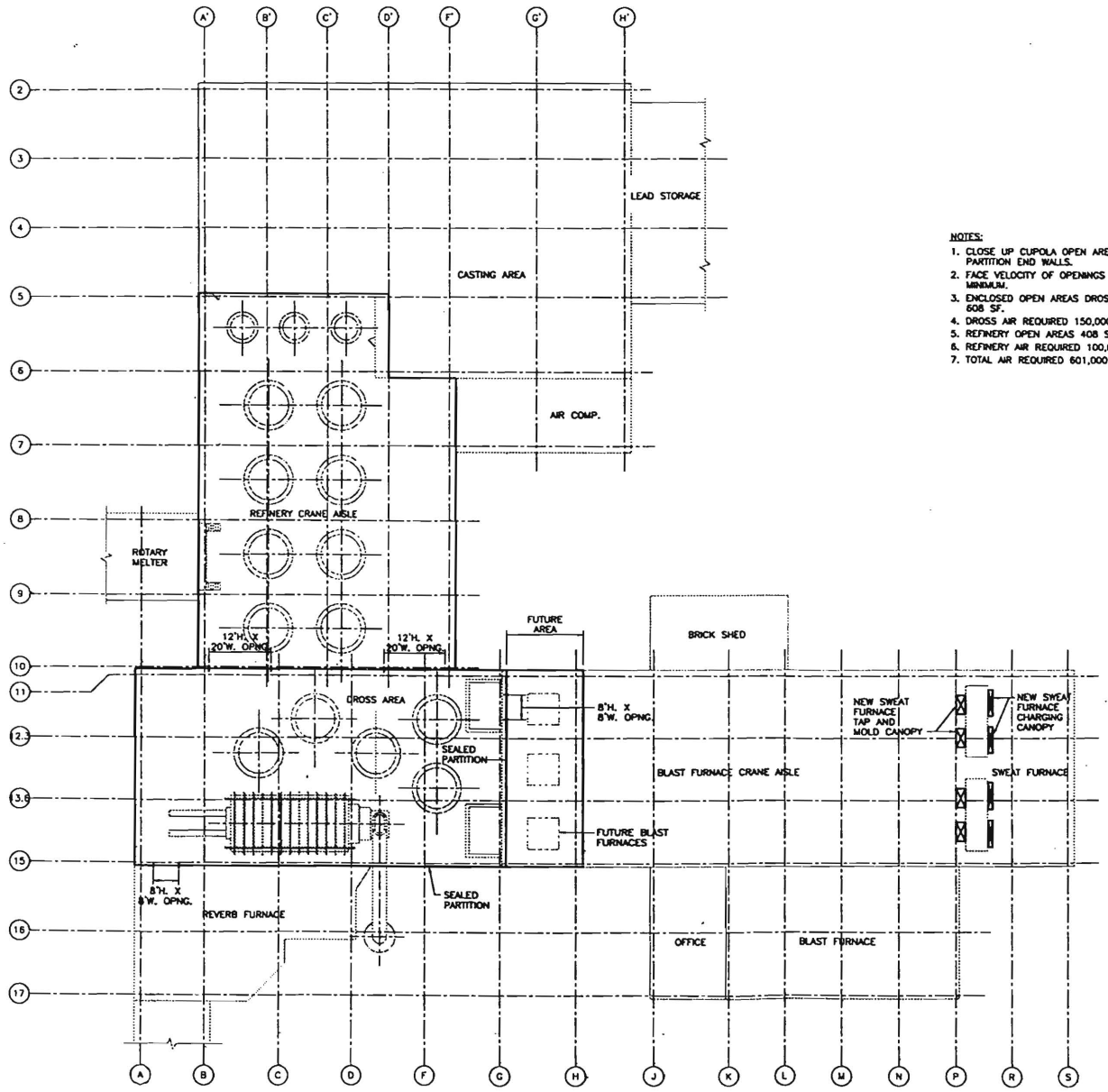

NOTES:

1. CLOSE UP CUPOLA OPEN AREA TO PARTITION END WALLS.
2. FACE VELOCITY OF OPENINGS 200 FPM MINIMUM.
3. ENCLOSED OPEN AREAS DROSS AREA= 608 SF.
4. DROSS AIR REQUIRED 150,000 ACFM.
5. REFINERY OPEN AREAS 408 SF.
6. REFINERY AIR REQUIRED 100,000 ACFM.
7. TOTAL AIR REQUIRED 601,000 ACFM.

PROGRESS PRINT

PRELIMINARY
NOT FOR CONSTRUCTION

IES ENGINEERS
ENGINEERING FOR INDUSTRY

REV.	DATE	DESCRIPTION	BY	APP
0	5-28-99	PRELIMINARY		

NOTE:
THE CONTRACTOR SHALL FIELD VERIFY ALL DIMENSIONS AND EXISTING CONDITIONS PRIOR TO PROCEEDING WITH ANY WORK. WHERE DISCREPANCIES OCCUR BETWEEN THESE DOCUMENTS AND EXISTING CONDITIONS, THE DISCREPANCY SHALL BE REPORTED TO THE OWNER AND/OR ENGINEER FOR EXPEDITING AND RESOLUTION.

CLIENT
THE DOE RUN CO.
BOSS, MISSOURI

PROJECT TITLE
BUICK SMELTER
BUICK RESOURSE
RECOVERY FACILITY

DRAWING TITLE
OPTION 3
GLOBAL & LOCAL CAPTURE

LAST UPDATE 5-28-99	ENGINEER FJS	IES CONTRACT No. 1659902
DATE 5-17-99	DESIGNER REP	DWG FILE No. 1652M100
SCALE AS NOTED	DRAWN DRS	MAST FILEID —

DRAWING NUMBER
M102

REVISION LEVEL
—

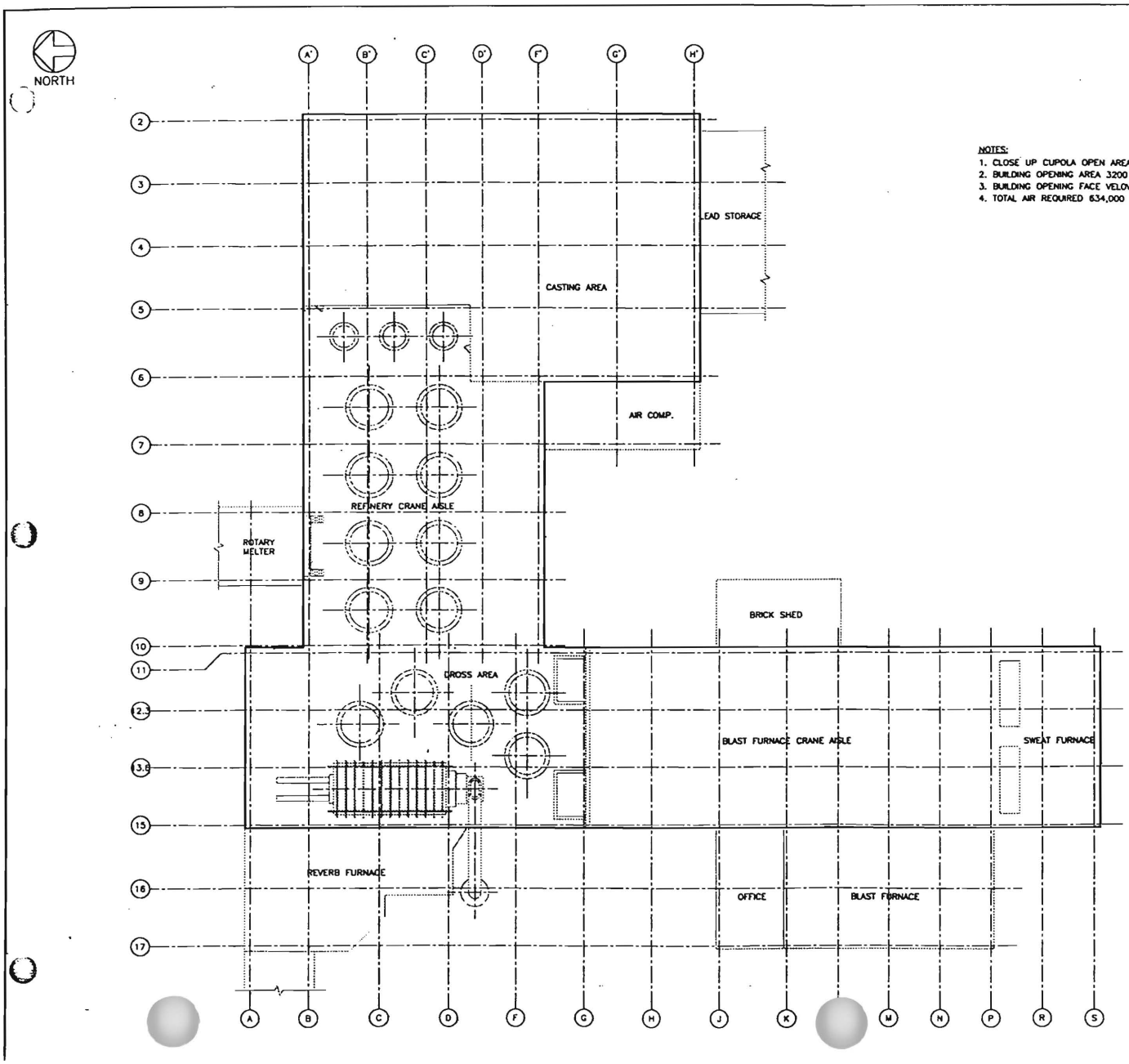

NOTES:
1. CLOSE UP CUPOLA OPEN AREA.
2. BUILDING OPENING AREA 3200 SF.
3. BUILDING OPENING FACE VELOCITY 200 FPM.
4. TOTAL AIR REQUIRED 634,000 ACFM.

PROGRESS PRINT

PRELIMINARY
NOT FOR CONSTRUCTION

ENGINEERS
ENGINEERING FOR INDUSTRY

REV.	DATE	DESCRIPTION	BY	APP
0	5-28-99	PRELIMINARY		

NOTE:
THE CONTRACTOR SHALL FIELD VERIFY ALL DIMENSIONS AND EXISTING CONDITIONS PRIOR TO PROCEEDING WITH ANY WORK. WHERE DISCREPANCIES OCCUR BETWEEN THESE DOCUMENTS AND EXISTING CONDITIONS, THE DISCREPANCY SHALL BE REPORTED TO THE OWNER AND/OR ENGINEER FOR EXPEDITING AND RESOLUTION.

CLIENT
THE DOE RUN CO.
BOSS, MISSOURI

PROJECT TITLE
BUICK SMELTER
BUICK RESOURSE
RECOVERY FACILITY

DRAWING TITLE
OPTION 2
GLOBAL CAPTURE

LAST UPDATE 5-28-99	ENGINEER FJS	IES CONTRACT No. 1659902
DATE 5-17-99	DRAWING REP	CAD FILE No. 1652M100
SCALE AS NOTED	DRAWN DRS	SHOP FILE# —

DRAWING NUMBER
M101
REVISION LEVEL
—

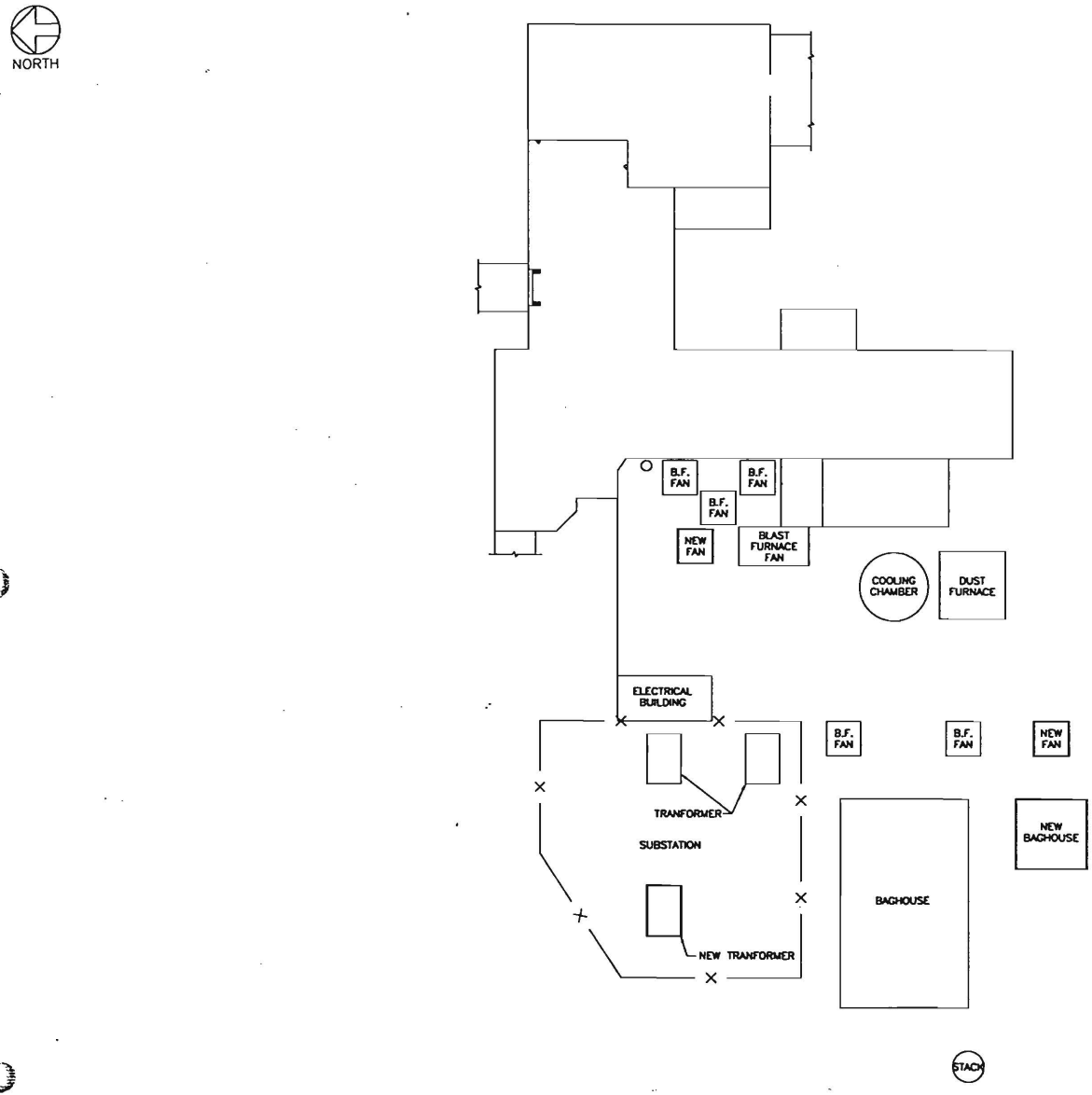

PARTIAL PLAN

PRELIMINARY
NOT FOR CONSTRUCTION

ENGINEERS
ENGINEERING FOR INDUSTRY

REV.	DATE	DESCRIPTION	BY	APP
--		--		

NOTE:
THE CONTRACTOR SHALL FIELD VERIFY ALL DIMENSIONS AND EXISTING CONDITIONS PRIOR TO PROCEEDING WITH ANY WORK. WHERE DISCREPANCIES OCCUR BETWEEN THESE DOCUMENTS AND EXISTING CONDITIONS, THE DISCREPANCY SHALL BE REPORTED TO THE OWNER AND/OR ENGINEER FOR EXPEDITING AND RESOLUTION.

CLIENT
THE DOE RUN CO.
BOSS, MISSOURI

PROJECT TITLE
BUICK SMELTER
BUICK RESOURSE
RECOVERY FACILITY

DRAWING TITLE
EQUIPMENT LOCATION
HIGH TEMPERATURE BAGHOUSE

LAST UPDATE --	DRAWN FJS	IES CONTRACT No. 1659902
DATE 6/2/99	DESIGNED FJS	CADD FILE No. 1652C101
SCALE 1" = 30'	DRAWN KDR	SHEET PLACED --

DRAWING NUMBER
C101
REVISION LEVEL

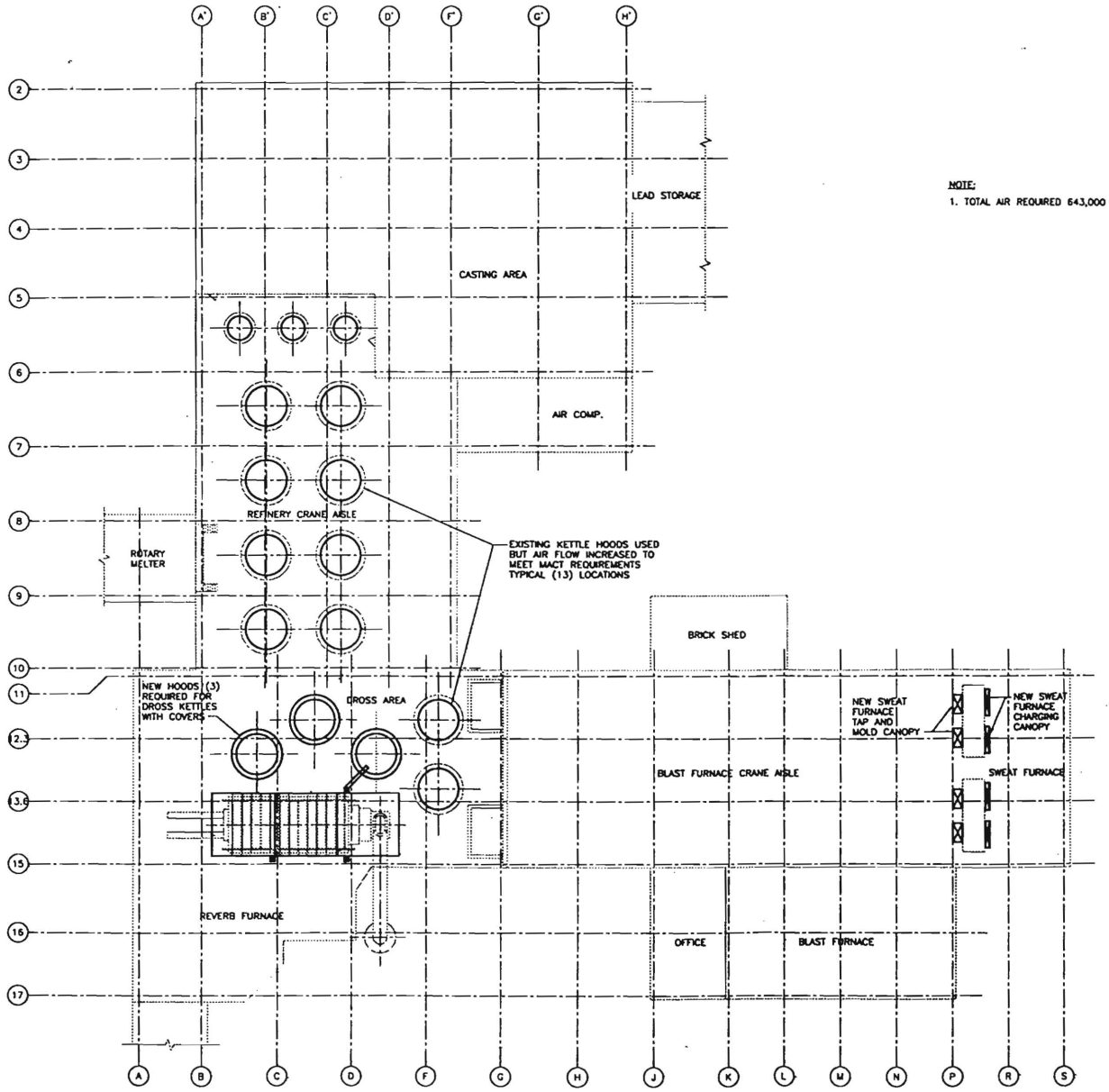

LEGEND

- NEW CANOPY HOOD
- NEW KETTLE HOOD
- EXISTING KETTLE HOOD UPDATED

NOTE:

1. TOTAL AIR REQUIRED 643,000 ACFM.

PROGRESS PRINT

PRELIMINARY
NOT FOR CONSTRUCTION

iES ENGINEERS — ENGINEERING FOR INDUSTRY

REV.	DATE	DESCRIPTION	BY	APP
0	5-28-99	PRELIMINARY		

NOTE:
THE CONTRACTOR SHALL FIELD VERIFY ALL DIMENSIONS AND EXISTING CONDITIONS PRIOR TO PROCEEDING WITH ANY WORK. WHERE DISCREPANCIES OCCUR BETWEEN THESE DOCUMENTS AND EXISTING CONDITIONS, THE DISCREPANCY SHALL BE REPORTED TO THE OWNER AND/OR ENGINEER FOR EXPEDITING AND RESOLUTION.

CLIENT
THE DOE RUN CO.
BOSS, MISSOURI

PROJECT TITLE
BUICK SMELTER
BUICK RESOURSE
RECOVERY FACILITY

DRAWING TITLE
OPTION 1
LOCAL CAPTURE CONCEPT

LAST UPDATE 5-28-99	ENGINEER FJS	IES CONTRACT No. 1859902
DATE 5-17-99	DRAWING REP	CADD FILE No. 1652M100
SCALE AS NOTED	DRAWN DRS	

DRAWING NUMBER
M100

REVISION LEVEL
—

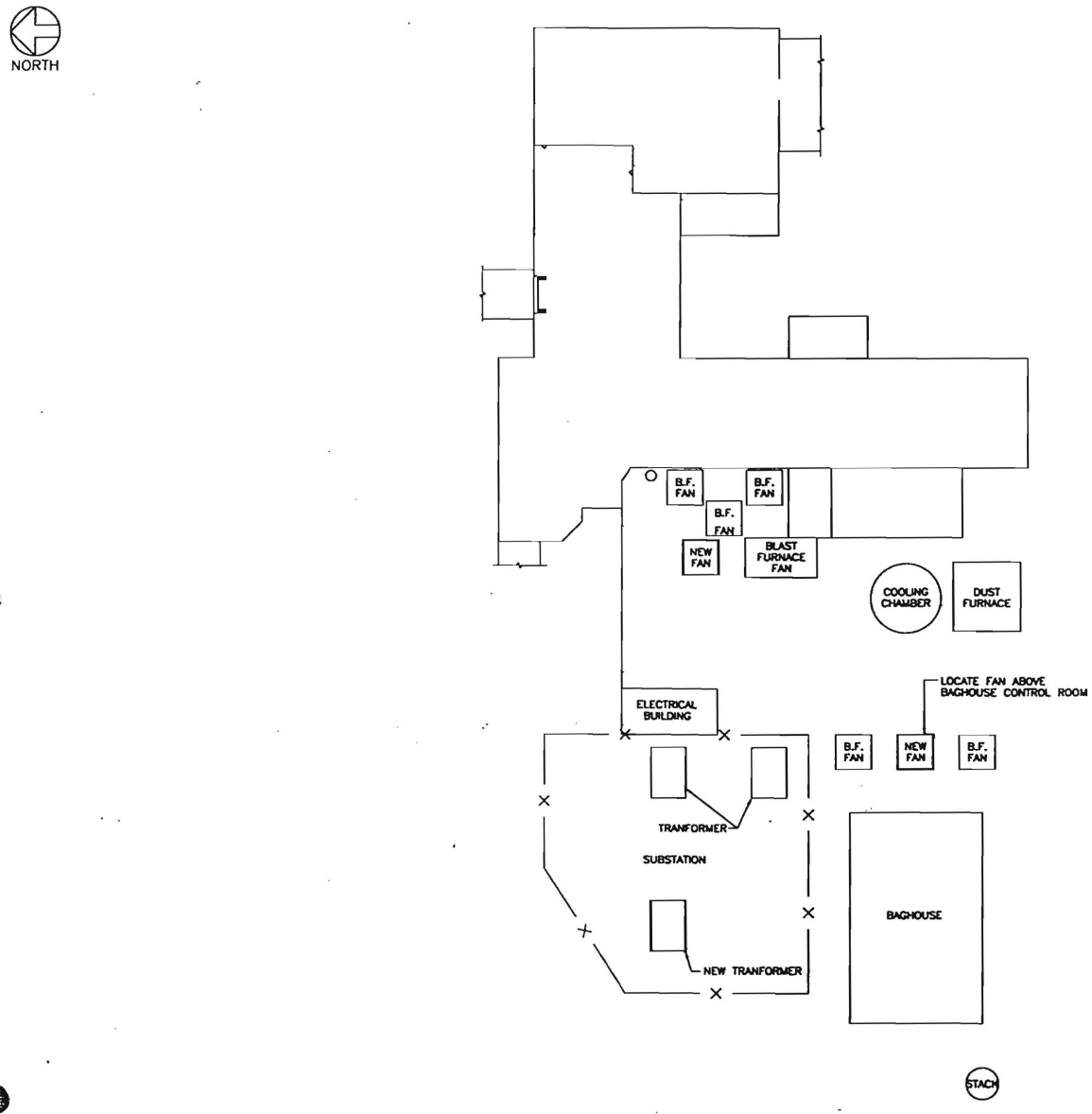

PARTIAL PLAN

PRELIMINARY
NOT FOR CONSTRUCTION

IES ENGINEERS
ENGINEERING FOR INDUSTRY

REV.	DATE	DESCRIPTION	BY	APP
--		--		

NOTE:
THE CONTRACTOR SHALL FIELD VERIFY ALL DIMENSIONS AND EXISTING CONDITIONS PRIOR TO PROCEEDING WITH ANY WORK. WHERE DISCREPANCIES OCCUR BETWEEN THESE DOCUMENTS AND EXISTING CONDITIONS, THE DISCREPANCY SHALL BE REPORTED TO THE OWNER AND/OR ENGINEER FOR EXPEDITING AND RESOLUTION.

CLIENT
THE DOE RUN CO.
BOSS, MISSOURI

PROJECT TITLE
BUICK SMELTER
BUICK RESOURSE
RECOVERY FACILITY

DRAWING TITLE
EQUIPMENT LOCATION
OPTIONS 1, 2 AND 3

LAST UPDATE --	ENGINEER FJS	IES DRAWING No. 1659902
DATE 6/2/99	DESIGNER FJS	DWG FILE No. 1652C100
SCALE 1" = 30'	DRAWN KDR	ANSI PLOTS --

DRAWING NUMBER
C100

REVISION LEVEL

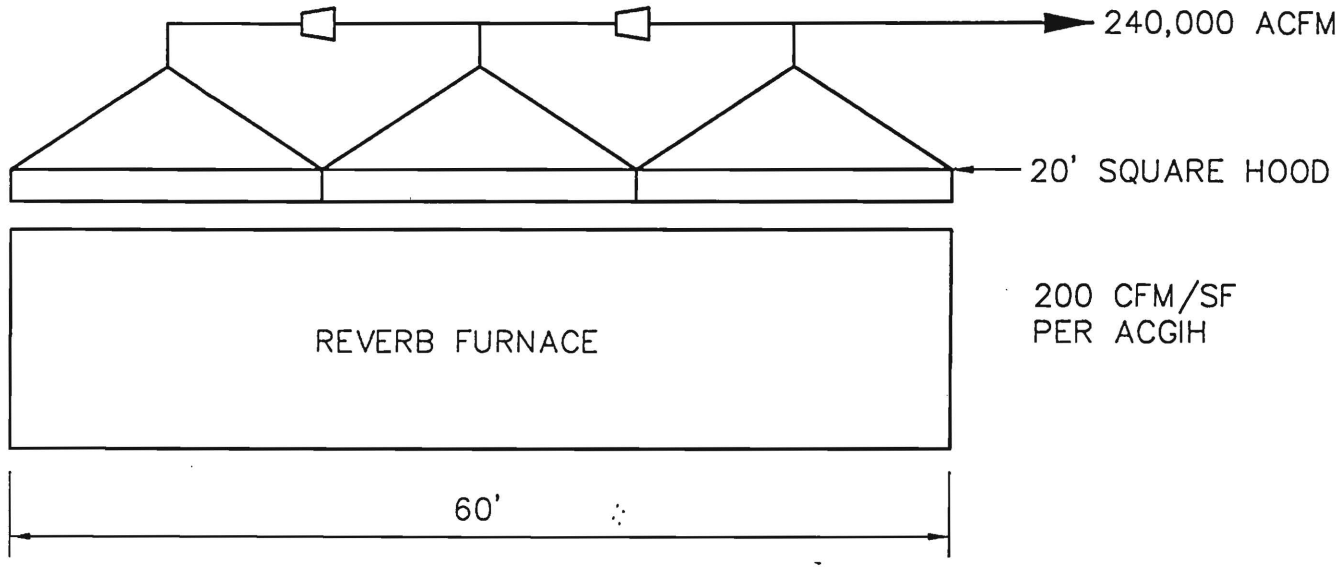

ELEVATION

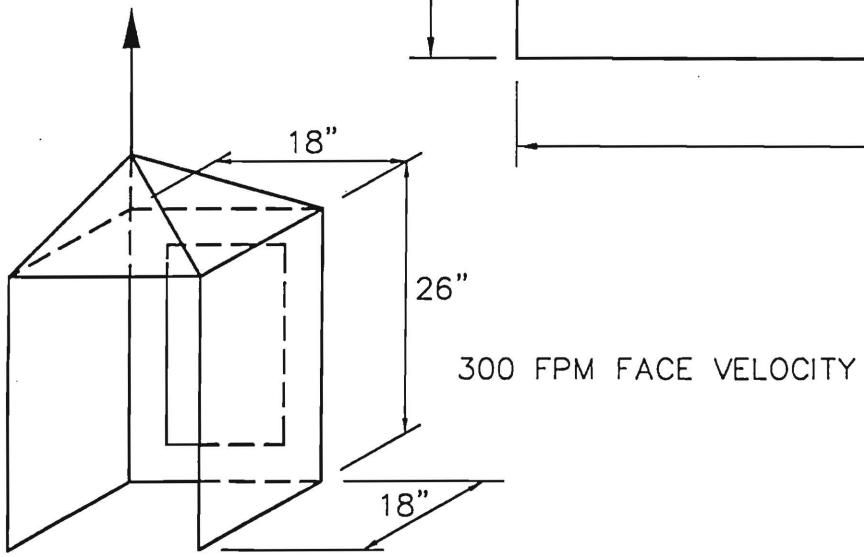

REVERB FURNACE
OPENING CANOPY

NOTE:
THE CONTRACTOR SHALL FIELD VERIFY ALL DIMENSIONS AND EXISTING CONDITIONS PRIOR TO PROCEEDING WITH ANY WORK. WHERE DISCREPANCIES OCCUR BETWEEN THESE DOCUMENTS AND EXISTING CONDITIONS, THE DISCREPANCY SHALL BE REPORTED TO THE OWNER AND/OR ENGINEER FOR EXPEDITING AND RESOLUTION.

PRELIMINARY
NOT FOR CONSTRUCTION

iES ENGINEERS

Date: 5/17/99 | File: 1652FIG1

Figure 1

DOE RUN COMPANY
BOSS, MO

OPTION 1 – LOCAL CAPTURE
REVERB FURNACE HOOD

IES ENGINEERS, INC.
DATA SHEET

CLIENT:	DOE RUN	DATE:	4/23/99
PROJECT NO.:	165.9902	BY:	FJS/REM
TITLE:	AIR FLOW SURVEY	TEMP=	505 F
SUBJECT:	LOCATION - REVERB FURNACE	DUCT SIZ	36 INCHES

FAN LOCATION (FAN B) AREA= 7.1 SQ. FT.

LOC.	PT.	VEL (FPM)	LOC.	PT.	VEL (FPM)
SIDE	1	1153	TOP	1	2748
	2	1427		2	2901
	3	1476		3	2650
	4	2285		4	2690
	5	2711		5	2547
	6	2810		6	2758
	7	2861		7	2875
	8	3082		8	2806
	9	3065		9	2258
	10	2759		10	1785
	11	0		11	0
	12	0		12	0
	13	0		13	0
	14	0		14	0
	15	0		15	0
1	TOT VEL	23629	2	TOT VEL	26018
1	AVE VEL	2363	2	AVE VEL	2602

TOTAL AVE. VELOCITY POINTS 1 & 2=	2482
SCFM=	17547
TEMPERATURE CORRECTION=	1.82
ACFM=	31948
MASS FLOW RATE (PPH)=	78831

IES ENGINEERS, INC.
DATA SHEET

CLIENT:	DOE RUN	DATE:	4/23/99
PROJECT NO.:	165.9902	BY:	FJS/REM
TITLE:	AIR FLOW SURVEY	TEMP=	195 F
SUBJECT:	SWEAT FURNACE	DUCT SIZ	36 INCHES

AREA= 7.1 SQ. FT.

LOC.	PT.	VEL (FPM)	LOC.	PT.	VEL (FPM)
SIDE	1	1743	BOTTOM	1	1514
	2	2209		2	2358
	3	2505		3	2349
	4	2673		4	2682
	5	2646		5	2748
	6	2814		6	2657
	7	2741		7	2885
	8	2869		8	2885
	9	2843		9	2687
	10	2748		10	2698
	11	2697		11	2673
	12	2648		12	2449
	13	2610		13	2142
	14	2460		14	0
	15	2540		15	0
	16	2533		16	0
	17	2606		17	0
	18	2218		18	0
	19	1968		19	0
	20	2268		20	0

1	TOT VEL	50339	2	TOT VEL	32727
1	AVE VEL	2517	2	AVE VEL	2517

TOTAL AVE. VELOCITY POINTS 1 & 2=	2517
SCFM=	17793
TEMPERATURE CORRECTION=	1.24
ACFM=	21990
MASS FLOW RATE (PPH)=	79938

IES ENGINEERS, INC.
DATA SHEET

CLIENT:	DOE RUN	DATE:	4/23/99
PROJECT NO.:	165.9902	BY:	FJS/REM
TITLE:	AIR FLOW SURVEY	TEMP=	235 F
SUBJECT:	LOCATION - BLAST FURNACE HYGIENE	DUCT SIZE=	42"X58" (16.9 S.F.)

LOC.	PT.	VEL (FPM)	LOC.	PT.	VEL (FPM)
# 1	1	2409	# 2	1	2591
	2	2375		2	2437
	3	2347		3	2094
	4	2258		4	1981
	5	2116		5	1859
	6	2128		6	1824
	7	2002		7	1897
	8	1713		8	1625
	9	1913		9	1563
	10	1493		10	1494
	11	1617		11	1399
	12	1452		12	1303
	13	0		13	0
	14	0		14	0
	15	0			
1	TOT VEL	23823	2	TOT VEL	22067
1	AVE VEL	1985	2	AVE VEL	1839

LOC.	PT.	VEL (FPM)	LOC.	PT.	VEL (FPM)
# 3	1	2402	# 4	1	2548
	2	2190		2	2375
	3	2014		3	2056
	4	1895		4	1906
	5	1603		5	1935
	6	1584		6	1842
	7	1618		7	1789
	8	1499		8	1739
	9	1349		9	1584
	10	1501		10	1620
	11	1033		11	1576
	12	969		12	752
	13	0		13	0
	14	0		14	0
	15	0			
3	TOT VEL	19657	4	TOT VEL	21722
3	AVE VEL	1638	4	AVE VEL	1810

IES ENGINEERS, INC.
DATA SHEET

CLIENT:	DOE RUN	DATE:	4/23/99
PROJECT NO.:	165.9902	BY:	FJS/REM
TITLE:	AIR FLOW SURVEY	TEMP=	235 F
SUBJECT:	LOCATION - BLAST FURNACE	DUCT SIZE=	42"X58" (16.9 S.F.)

LOC.	PT.	VEL (FPM)	LOC.	PT.	VEL (FPM)
# 5	1	2625	# 6	1	2478
	2	2403		2	2374
	3	2232		3	2224
	4	2122		4	2192
	5	1907		5	2014
	6	1982		6	2048
	7	1863		7	2011
	8	2054		8	1893
	9	1801		9	1857
	10	1651		10	1813
	11	1539		11	1728
	12	1358		12	1433
	13	0		13	0
	14	0		14	0
	15	0			
5	TOT VEL	23537	6	TOT VEL	24065
5	AVE VEL	1961	6	AVE VEL	2005

LOC.	PT.	VEL (FPM)	LOC.	PT.	VEL (FPM)
# 7	1	1433	# 8	1	1869
	2	2267		2	2156
	3	2346		3	1994
	4	2135		4	1869
	5	2162		5	1857
	6	2057		6	1750
	7	1916		7	1731
	8	1783		8	1895
	9	1700		9	1791
	10	1721		10	1753
	11	1788		11	1812
	12	1707		12	1659
	13	0		13	0
	14	0		14	0
	15	0			
7	TOT VEL	23015	8	TOT VEL	22136
7	AVE VEL	1918	8	AVE VEL	1845

IES ENGINEERS, INC.
DATA SHEET

CLIENT:	DOE RUN	DATE:	4/23/99
PROJECT NO.:	165.9902	BY:	FJS/REM
TITLE:	AIR FLOW SURVEY	TEMP=	235 F
SUBJECT:	LOCATION - BLAST FURNACE HYGIENE	DUCT SIZE=	42"X58" (16.9 S.F.)

LOC.	PT.	VEL (FPM)	LOC.	PT.	AVE VEL
# 9	1	1910		1	1985
	2	3411		2	1839
	3	4401		3	1638
	4	4418		4	1810
	5	4397		5	1961
	6	4973		6	2005
	7	4574		7	1918
	8	4029		8	1845
	9	3405		9	3492
	10	2538			
	11	351	TOTAL VELOCITY=		18493
	12	0	AVE VEL=		2055
	13	0	SCFM=		34726
	14	0	TEMPERATURE CORRECTION=		1.31
	15	0	ACFM=		45537
			MASS FLOW RATE (PPH)=		156010
9	TOT VEL	38407			
9	AVE VEL	3492			

IES ENGINEERS, INC.
DATA SHEET

CLIENT:	DOE RUN	DATE:	4/23/99
PROJECT NO.:	165.9902	BY:	FJS/REM
TITLE:	AIR FLOW SURVEY	TEMP=	70 F
SUBJECT:	LOCATION - REFINERY KETTLES	DUCT SIZE=	44"

FAN LOCATION (FAN B) AREA= 10.6 SQ. FT.

LOC.	PT.	VEL (FPM)	LOC.	PT.	VEL (FPM)
SIDE	1	2460	TOP	1	3119
	2	2607		2	3202
	3	2813		3	3077
	4	5973		4	3031
	5	5924		5	2932
	6	5801		6	2847
	7	5846		7	2879
	8	5872		8	2772
	9	5910		9	2651
	10	5892		10	2732
	11	0		11	0
	12	0		12	0
	13	0		13	0
	14	0		14	0
	15	0			

1	TOT VEL	49098	2	TOT VEL	29242
1	AVE VEL	4910	2	AVE VEL	2924

TOTAL AVE. VELOCITY POINTS 1 & 2=	3917
SCFM=	41360
TEMPERATURE CORRECTION=	1.00
ACFM=	41360
MASS FLOW RATE (PPH)=	185814

IES ENGINEERS, INC.
DATA SHEET

CLIENT:	DOE RUN	DATE:	4/23/99
PROJECT NO.:	165.9902	BY:	FJS/REM
TITLE:	AIR FLOW SURVEY	TEMP=	380 F
SUBJECT:	ROTARY MELTER HYGIENE	DUCT SIZ	41 INCHES DIAM

FAN LOCATION (FAN C) AREA= 9.168 SQ. FT.

LOC.	PT.	VEL (FPM)	LOC.	PT.	VEL (FPM)
TOP	1	5088	SIDE	1	2178
	2	5508		2	4415
	3	4832		3	4385
	4	4714		4	4248
	5	4660		5	4112
	6	4332		6	4136
	7	4380		7	4122
	8	4662		8	4030
	9	4641		9	4003
	10	4564		10	4038
	11	4312		11	3970
	12	0		12	0
	13	0		13	0
	14	0		14	0
	15	0		15	0
1	TOT VEL	51693	2	TOT VEL	43637
1	AVE VEL	4699	2	AVE VEL	3967

TOTAL AVE. VELOCITY POINTS 1 & 2=	4333
SCFM=	39727
TEMPERATURE CORRECTION=	1.58
ACFM=	62963
MASS FLOW RATE (PPH)=	178478

IES ENGINEERS, INC.
DATA SHEET

CLIENT:	DOE RUN	DATE:	4/23/99
PROJECT NO.:	165.9902	BY:	FJS/REM
TITLE:	AIR FLOW SURVEY	TEMP=	174 F
SUBJECT:	DUST FURNACE (DUCT)	DUCT SIZ	16 INCHES

AREA= 1.4 SQ. FT.

LOC.	PT.	VEL (FPM)	LOC.	PT.	VEL (FPM)
SIDE	1	1854	BOTTOM	1	2628
	2	2526		2	3019
	3	3068		3	3748
	4	3452		4	3932
	5	3577		5	3880
	6	3652		6	3333
	7	0		7	0
	8	0		8	0
	9	0		9	0
	10	0		10	0
	11	0		11	0
	12	0		12	0
	13	0		13	0
	14	0		14	0
	15	0			

1	TOT VEL	18129	2	TOT VEL	20540
1	AVE VEL	3022	2	AVE VEL	3423

TOTAL AVE. VELOCITY POINTS 1 & 2=	3222
SCFM=	4499
TEMPERATURE CORRECTION=	1.20
ACFM=	5382
MASS FLOW RATE (PPH)=	20214

IES ENGINEERS, INC.
DATA SHEET

CLIENT:	DOE RUN	DATE:	4/23/99
PROJECT NO.:	165.9902	BY:	FJS/REM
TITLE:	AIR FLOW SURVEY		
SUBJECT:	COOLING CHAMBER TEMPERATURE CALCULATION		

	Mass Flow (pph)	x	Temperature (F)	=	(MF)(T)
Blast Furn. Ex.	213882		123.5		26414447.08
Reverb Furn. Ex.	78831		505.0		39809706.91
Reverb Hygiene	224964		161.3		36286645.75
Refinery Kttls. Hy.	185814		70.0		13006983.75
Rotary Melter Hy.	178478		380.0		67821487.34
Sweat Furn. Ex.	79938		195.0		15587910.98
Blast Furn. Hy.	156010		235.0		36662461.79
Dust Furn. Hy.	20214		174.0		3517227.776
Dust Furn. Ex.	6013		1995.0		11995935
Total	1144144.057				251102806.4

Cooling Chamber Temperature = (MF)(T) / (MF)

Cooling Chamber Temperature = 219.5 F

APPENDIX B

BLAST FURNACE CALCULATIONS

Summary of Operating Cost
Existing Blast Furnace Scenario
Afterburner and Sonic Cooler Energy Costs Only

Electrical Energy Calculations

Booster Fan Performance		
Fan Efficiency	65%	
Flow	55,000	acfm
Pressure Drop	10	in w.c.
Booster Fan Hp	133.3	HP
Other Hp (Pumps etc.)	15	
Air Compressor HP	250	
Total Hp	398.3	
Combustion Air Blower	100	hp
Misc. Controls	1	hp
Assumed additional Fan Power	180	hp
Motor Efficiency	92%	
Total Kw	550.6	KWH

Water Usage

Cooling required	105000000	MMBTU/hr.
(For New Sonic Cooler)		(from manf.)
Water usage	210	gpm

Propane Use Calculations

Process flow	73,679	acfm
Pressure	14.7	psia
Temperature	250	F
Moisture content	10.5%	by Vol

Summary of Operating Cost
Existing Blast Furnace Scenario
Afterburner and Sonic Cooler Energy Costs Only

Airflow			
70 F	14.7 psia		55,000 scfm
This breaks down to			
Mass of air			3,692 lb/m
Mass of water			278 lb/m
Total mass			3,970 lb/m
Desired combustion temperature			1,500 F
Heat required			1,381,626 btu/m
			82,897,585 btu/hr
Heat provided from the exhaust gases			0.00%
Heat required from the burner and or solvent			1,381,626 btu/m
			82,897,585 btu/hr
VOC load			0
VOC LHV			12,000 btu/lb
Heat provided by VOC			0 btu/m
			0 btu/hr
Additional heat req	0 scfm	Heat Req'd	0 btu/m
Total Supplemental Heat Requirement			82,897,585 btu/hr
Fuel LHV			2,325 btu/scf
Propane Density			0.1137 lb/cu ft at stp
Is air pulled from outside the process stream?			no
Excess air			10%
Weight of air required to burn 1 scf of fuel			0.0000 lb
Approximate net heat provided by the fuel			2,200 btu/scf

Summary of Operating Cost
Existing Blast Furnace Scenario
Afterburner and Sonic Cooler Energy Costs Only

Total fuel flow	37,686	scfh
Mass of gas	71.41	lb/m
Outside air mass required	0.00	lb/m
Total mass flow (approximate)		
Nitrogen	2,835.4	lb/m
Oxygen	785.1	
Carbon dioxide	182.1	
Water	423.4	
Total	4,226.0	
Heat from exhaust	0	btu/m
Approximate exhaust temperature from afterburner	1,500	F

Summary of Operating Cost
Two New Blast Furnaces and Two (2) New Afterburners
Afterburner and Sonic Cooler Operating Costs Only

Electrical Energy Calculations

Booster Fan Performance	
Fan Efficiency	65%
Flow	21,012 acfm
Pressure Drop	10 in w.c.
Booster Fan Hp	50.9 HP
Other Hp (Pumps etc.)	15
Air Compressor HP	250
Total Hp	315.9
Total Kw	256.2

Water Usage

Cooling required	21000000 MMBTU/hr (from manf.)
Water usage	42 gpm

Propane Use Calculations (for Afterburner only)

Process flow	21,012 acfm
Pressure	14.7 psia
Temperature	250 F
Moisture content	10.5% by Vol
Airflow	
70 F 14.7 psia	15,685 scfm
This breaks down to	
Mass of air	1,053 lb/m
Mass of water	79 lb/m
Total mass	1,132 lb/m
Desired combustion temperature	1,500 F

Summary of Operating Cost
Two New Blast Furnaces and Two (2) New Afterburners
Afterburner and Sonic Cooler Operating Costs Only

Heat required			394,015	btu/m
			23,640,884	btu/hr
Heat provided from the exhaust gases			0.00%	
Heat required from the burner and or solvent			394,015	btu/m
			23,640,884	btu/hr
VOC load			0	
VOC LHV			12,000	btu/lb
Heat provided by VOC			0	btu/m
			0	btu/hr
Additional heat req.	0 scfm	Heat Req'd	0	btu/m
Total Supplemental Heat Requirement			23,640,884	btu/hr
Fuel LHV			2,325	btu/scf
Propane Density			0.1137	lb/cu ft at stp
Is air pulled from outside the process stream?			no	
Excess air			10%	
Weight of air required to burn 1 scf of fuel			0.0000	lb
Approximate net heat provided by the fuel			2,200	btu/scf
Total fuel flow			10,747	scfh
Mass of gas			20.37	lb/m
Outside air mass required			0.00	lb/m
Total mass flow (approximate)				
Nitrogen	808.6	808.6	808.6	lb/m
Oxygen	244.3	244.3	223.9	
Carbon dioxide	0.0	0.0	51.9	
Water	79.4	79.4	120.7	
Total	1,132.3	1,132.3	1,205.2	
Heat from exhaust			0	btu/m

Summary of Operating Cost
Two New Blast Furnaces and Two (2) New Afterburners
Afterburner and Sonic Cooler Operating Costs Only

Approximate exhaust temperature from afterburner	1,500 F

NOTES:

1. Costs to bring the unit to temperature are considered to be negligible.

2. This mass calculation shows that fuel is required to maintain temperature for combustion of the THCs. However, the system may be self sustaining due to CO generation. Therefore 1/2 of the gas consumption was used in the operating costs.

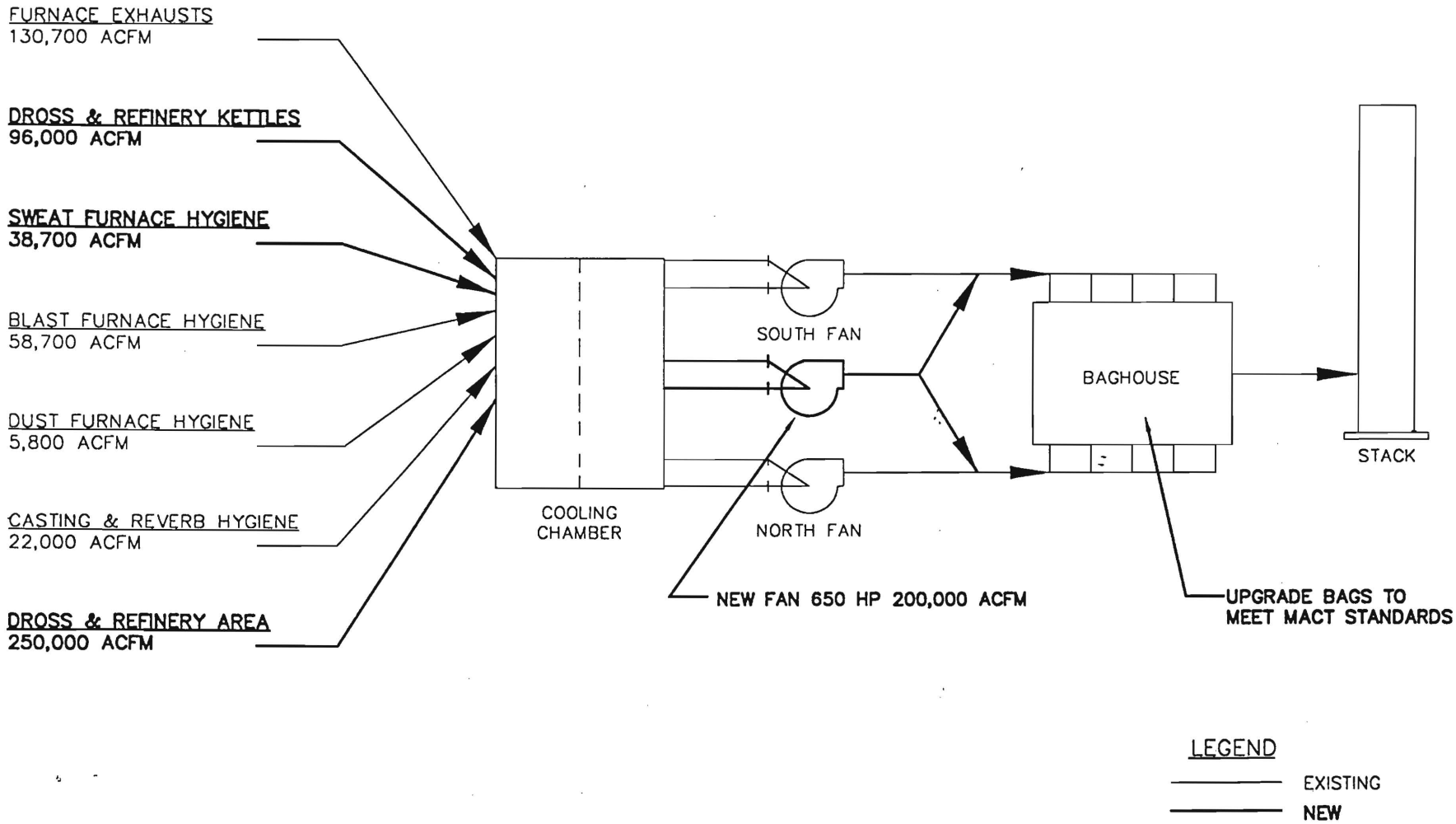

NOTE:
THE CONTRACTOR SHALL FIELD VERIFY ALL DIMENSIONS AND EXISTING CONDITIONS PRIOR TO PROCEEDING WITH ANY WORK. WHERE DISCREPANCIES OCCUR BETWEEN THESE DOCUMENTS AND EXISTING CONDITIONS, THE DISCREPANCY SHALL BE REPORTED TO THE OWNER AND/OR ENGINEER FOR EXPEDITING AND RESOLUTION.

PRELIMINARY
NOT FOR CONSTRUCTION

ENGINEERS

Date:	File:
6/2/99	1652FIG7

Figure 7

DOE RUN COMPANY
BOSS, MO

AIR FLOW DIAGRAM
OPTION 3

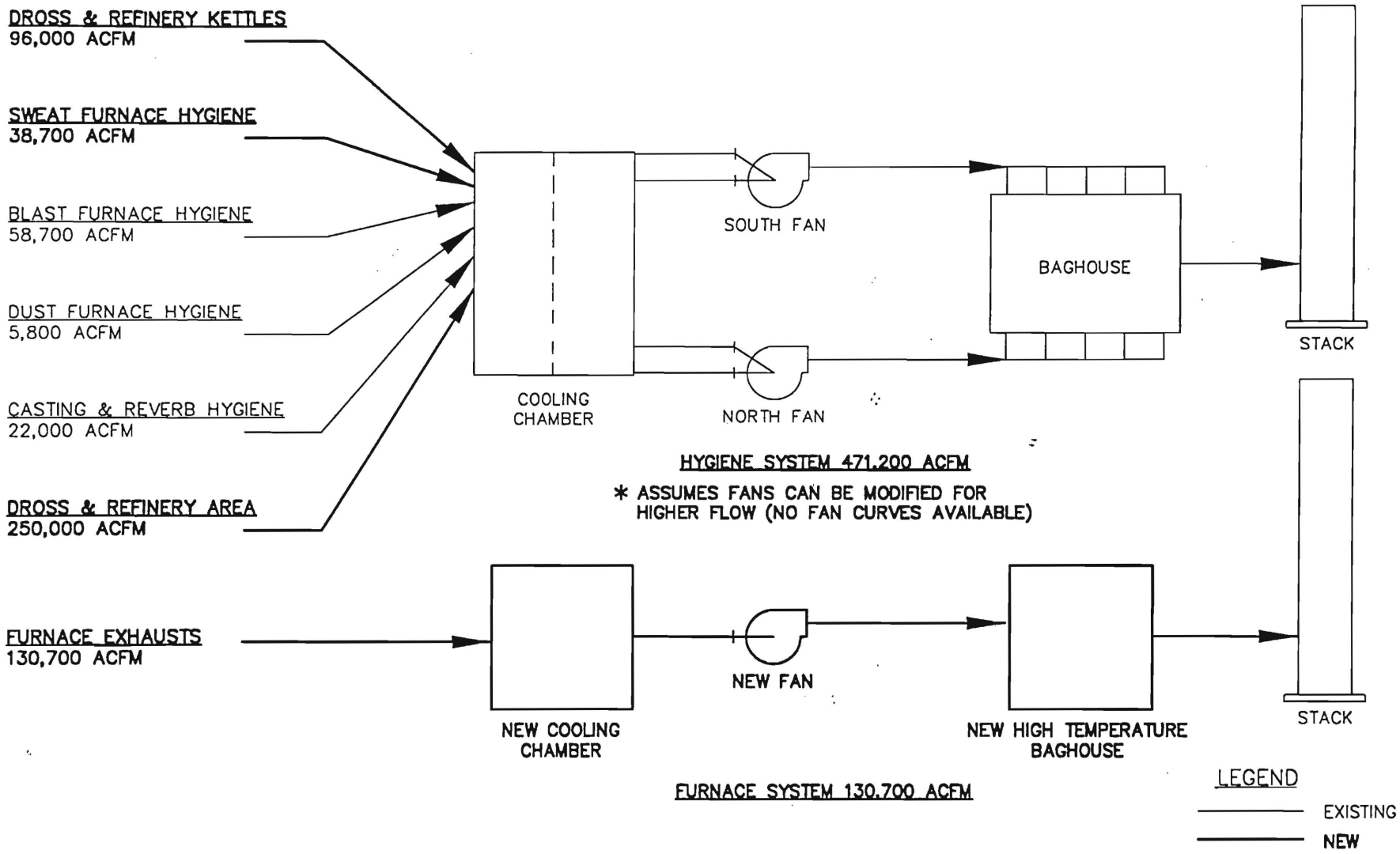

NOTE:
THE CONTRACTOR SHALL FIELD VERIFY ALL DIMENSIONS AND EXISTING CONDITIONS PRIOR TO PROCEEDING WITH ANY WORK. WHERE DISCREPANCIES OCCUR BETWEEN THESE DOCUMENTS AND EXISTING CONDITIONS, THE DISCREPANCY SHALL BE REPORTED TO THE OWNER AND/OR ENGINEER FOR EXPEDITING AND RESOLUTION.

PRELIMINARY
NOT FOR CONSTRUCTION

IES ENGINEERS

Date: 6/2/99 File: 1652FIG8

Figure 8

DOE RUN COMPANY
BOSS, MO

AIR FLOW DIAGRAM
HIGH TEMPERATURE BAGH

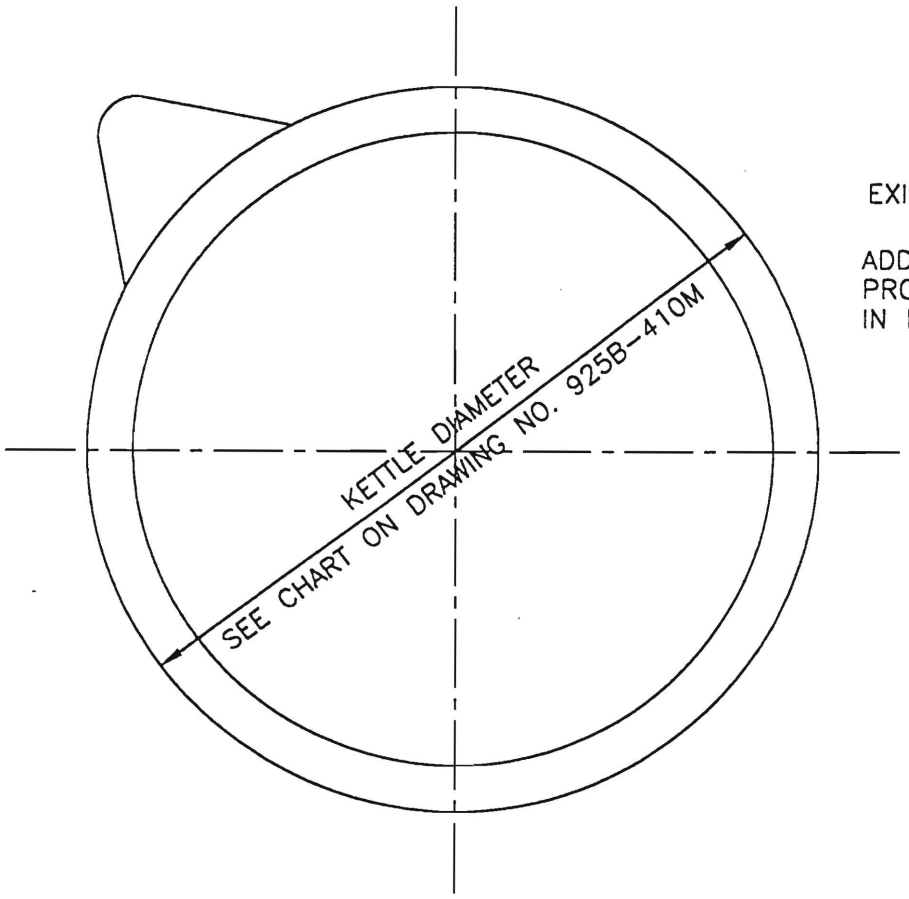

PLAN – KETTLE

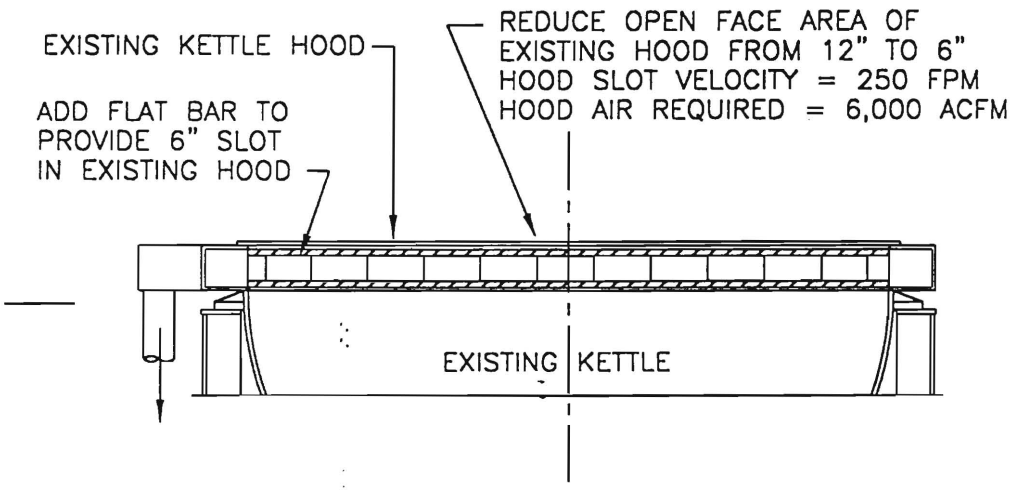

SECTION THRU EXISTING KETTLE

NOTE:
THE CONTRACTOR SHALL FIELD VERIFY ALL DIMENSIONS AND EXISTING CONDITIONS PRIOR TO PROCEEDING WITH ANY WORK. WHERE DISCREPANCIES OCCUR BETWEEN THESE DOCUMENTS AND EXISTING CONDITIONS, THE DISCREPANCY SHALL BE REPORTED TO THE OWNER AND/OR ENGINEER FOR EXPEDITING AND RESOLUTION.

PRELIMINARY
NOT FOR CONSTRUCTION

iES ENGINEERS

Date: 5/28/99 | File: 1652FIG6

Figure 5

DOE RUN COMPANY
BOSS, MO

REVISED/MODIFIED
REFINERY KETTLE HOOD

APPENDIX D

COST ESTIMATE BREAKDOWNS

DOE RUN RESOURCE RECYCLING DIVISION
COST ESTIMATE
OPTION 1 - LOCAL CAPTURE

DIRECT COSTS

Direct Equipment Purchases:

Exhaust Fans	280000
Dampers	7800
Filter Bags	678500
Controls	14000
Electrical	67000
Supports	30000
Sub-Total	$ 1,077,300.00

Direct Installation Costs:

Ductwork Supply and Install	181500
Hood Suppply & Installation	83650
Labor to Install Filter Bags	45000
Controls	5000
Electrical	25000
Site Work	113000
Sub-Total	$ 453,150.00

INDIRECT COSTS

Engineering	$ 250,000.00
Contingency	$ 280,000.00
	$ 530,000.00

TOTAL CONCEPTUAL COSTS	$ 2,060,450.00

DOE RUN RESOURCE RECYCLING DIVISION
COST ESTIMATE
OPTION 2 - GLOBAL CAPTURE

DIRECT COSTS

Direct Equipment Purchases:

Exhaust Fans	280000
Dampers	3000
Filter Bags	678500
Controls (Incl. with electrical)	0
Electrical	67000
Supports	13000
Sub-Total	$ 1,041,500.00

Direct Installation Costs:

Ductwork Supply and Install	344000
Partitions & Supports	201500
Labor to Install Filter Bags	45000
Controls (Incl. with electrical)	0
Electrical	25000
Site Work	113000
Sub-Total	$ 728,500.00

INDIRECT COSTS

Engineering	$ 280,000.00
Contingency	$ 320,000.00
	$ 600,000.00

TOTAL CONCEPTUAL COSTS $ 2,370,000.00

DOE RUN RESOURCE RECYCLING DIVISION
COST ESTIMATE
OPTION 3 - LOCAL GLOBAL CAPTURE

DIRECT COSTS

Direct Equipment Purchases:

Exhaust Fans		280000
Dampers		7800
Filter Bags		678500
Controls		14000
Electrical		67500
Supports		12000
Sub-Total	$	1,059,800.00

Direct Installation Costs:

Ductwork Supply and Install		311400
Hood Suppply & Installation		29400
Partitions & Supports		257820
Labor to Install Filter Bags		45000
Controls		5000
Electrical		25000
Site Work	$	113,000.00
Sub-Total	$	786,620.25

INDIRECT COSTS

Engineering	$	270,000.00
Contingency	$	320,000.00
	$	590,000.00
TOTAL CONCEPTUAL COSTS	$	2,436,420.25

The Doe Run Co.
Buick Facility
Summary of Operating and Capital Costs

Assumed			
Operating Hours	6600 hrs/year		
Utility Costs			
Propane	$0.39 $/gal	or	$10.67 /1000 scf
Electric	$0.0390 /KWH (average)		
Water	$2.40 /1000 gallons (est.)		

Cost Summary:	Existing Blast Furnace Afterburner and Cooler	New Blast Furnaces & Afterburners	New Rotary Furnaces
Capital Cost	$3,158,000	$3,579,000	$5,688,000
Operating Costs	$3,152,000	$663,000	$375,000
Annualized Costs (@ 10 years @ 5%)	$3,554,000	$1,119,000	$1,099,000

Assumptions:
1. Furnace operation costs are neglected. Furnace operational costs are assumed to be similar.
2. Blast furnace cost data provided by Doe Run. Standard units not readily available.
3. Cost estimates contain a 20% contingency.
4. Maintenance costs are assumed to be 5% of equipment costs.
5. Refractory replacement costs for the furnaces and the cooling chambers is not considered in the estimate.
6. Utility upgrades, if required, are not included in the estimates.

Summary of Capital and Operating Costs

	Existing Blast Furnace New Afterburner	New Blast Furnace and Afterburner	New Rotary Furnace
Electric Requirements (KWH)	551	256	69
Hourly Operating Cost ($/KWH)	0.0390	0.0390	0.0390
Annual Electricity Costs ($/yr)	$141,700	$65,900	$17,700
Water Useage Rate (gpm)	210.00	42.00	76.36
Hourly Operating Cost ($/1000 gal)	2.40	2.40	2.40
Annual Operating Costs	$199,600	$39,900	$72,600
Propane for Treament Device	37,686	5,374 *	0
Cost of propane ($/MCF)	10.67	10.67	10.67
Annual propane Cost	$2,653,200	$378,300	$0
Total Annual Utility Costs	$2,994,500	$484,100	$90,300
Estimated Yearly Maintenance Costs	$157,911	$178,941	$284,400
Total Estimated Operating Costs	$3,152,411	$663,041	$374,700
Equipment and Installation Costs	$3,158,213	$3,578,820	$5,687,943
Annualized Equipment and Installation (@ 10 years @ 5%)	$402,000	$455,500	$724,000
Total Annualized Costs	**$3,554,411**	**$1,118,541**	**$1,098,700**

THE DOE RUN COMPANY
New Afterburner on Existing Blast Furnace
Conceptual Cost Estimate
IES Job No. 165.9902

DIRECT COSTS	
Direct Equipment Purchases:	
Equipment	
Afterburner	604,000
Booster Fan	50,000
Cooling Chamber	546,000
Air Compressor System	164,000
Ductwork	121,300
Dampers, supports, isolators	104,600
Direct Installation Costs	
Sitework	151,000
Mechanical Installation	
Afterburner	131,900
Cooling Chamber	335,000
Booster Fan	16,000
Electrical Installation	66,000
Contractor Fees, Supervision., O/H and Profit	150,400
Sub-Total Direct Costs	**2,440,200**
INDIRECT COSTS	
Preliminary Engineering	34,500
Final Engineering	80,500
Start-up	8,800
Permitting	16,000
Sub-Total Indirect Costs	**139,800**
Contingency	578,000
TOTAL CONCEPTUAL COSTS	**$3,158,000**

DOE RUN EXISTING BLAST FURNACE AND NEW AFTERBURNER CONCEPTUAL COST ESTIMATE					
COST CODE	DESCRIPTION	QUANTITY	UNIT	UNIT COST	SUBTOTAL

BASIS OF ESTIMATE:

- See attached report for engineering data, drawing list and specifications.
- See attached schedule for milestone dates and durations.

EXCLUSIONS:

- Remedies for concealed conditions - costs associated with removal, correction or avoidance of conditions not readily identifiable from visual inspection or identified in record documents issued to IES Engineers.
- All costs associated with hazardous materials other than those delineated in the project scope of work
- Builder's risk insurance, pollution insurance and other forms of insurance related to protection of onwer's property and personnel.
- Reagents, chemicals, lubricants or other form of process consumables.
- Spare parts or stock materials
- All costs associated with changes in schedule or plan of approach caused by reason beyond the control of IES Engineers.
- The following work is to be performed by others:
  None
- The following items are included in this estimate as allowances:
  None

THE DOE RUN COMPANY
Two (2) New Blast Furnaces
Conceptual Cost Estimate
IES Job No. 165.9902

DIRECT COSTS	
Direct Equipment Purchases:	
Equipment	
Blast Furnaces (2)	580,000
Charging System	232,000
Jacket Cooling System	232,000
Afterburners (2)	111,300
Cooling Chamber	410,000
Air Compressor System	60,000
Booster Fans (2)	36,000
Ductwork	23,200
Dampers, supports, isolators	44,400
Direct Installation Costs	
Sitework	271,400
Miscellaneous Metals	50,700
Mechanical Installation	
Blast Furnaces	75,250
Piping	102,300
Afterburner	38,650
Cooling Chamber	125,200
Booster Fan	14,100
Electrical Installation	174,500
Contractor Fees, Supervision., O/H and Profit	170,400
Sub-Total Direct Costs	**2,751,400**
INDIRECT COSTS	
Preliminary Engineering	39,300
Final Engineering	91,700
Start-up	17,600
Permitting	24,000
Sub-Total Indirect Costs	**172,600**
Contingency	655,000
TOTAL CONCEPTUAL COSTS	**$3,579,000**

DOE RUN TWO BLAST FURNACES AND NEW AFTERBURNERS CONCEPTUAL COST ESTIMATE					
COST CODE	DESCRIPTION	QUANTITY	UNIT	UNIT COST	SUBTOTAL

BASIS OF ESTIMATE:

- See attached report for engineering data, drawing list and specifications.
- See attached schedule for milestone dates and durations.
- Owner must provide final authorization for any excavation
- Union or non-union labor is acceptable.
- Estimate assumes normal working hours
- Estimate assumes Doe Run's acceptance of the terms and conditions in A191

EXCLUSIONS:

- Remedies for concealed conditions - costs associated with removal, correction or avoidance of conditions not readily identifiable from visual inspection or identified in record documents issued to IES Engineers.
- All costs associated with hazardous materials other than those delineated in the project scope of work
- Builder's risk insurance, pollution insurance and other forms of insurance related to protection of onwer's property and personnel.
- Reagents, chemicals, lubricants or other form of process consumables.
- Spare parts or stock materials
- All costs associated with changes in schedule or plan of approach caused by reason beyond the control of IES Engineers.
-

We assume that utilities are easily relocated from the existing blast furnace area to the new. We further assuime that the new tuyere feed control system can be retrofitted for this operation. Costs for the retrofit are not included.

DOE RUN TWO BLAST FURNACES AND NEW AFTERBURNERS CONCEPTUAL COST ESTIMATE					
COST CODE	DESCRIPTION	QUANTITY	UNIT	UNIT COST	SUBTOTAL

- The following items are to be provided by the owner:
  Electrical Power
  Water
  Use of sanitary facilities
  Use of office space
  Use of telephones
  Parking and area for storage of materials
  If these faciltities cannot be provided, space for a trailor is required with access to a local elecrical and phone connections. General conditions costs will have to be adjusted accordingly.

- Safety equipment and PPE provided by Doe Run

- Site plan fees, permit fees, and other regulatory costs are excluded

- The following work is to be performed by others:
  Cleaning
  Supplying Dumpsters

- The following items are included in this estimate as allowances:
  Selective demolition

- IES assumes that Doe Run or IES will purchase the equipment

THE DOE RUN COMPANY
Two (2) New Rotary Furnaces
Concpetual Cost Estimate
IES Job No. 165.9902

DIRECT COSTS	
Direct Equipment Purchases:	
Equipment	
Rotary Furnaces (2)	2,088,000
Charging System	174,000
Cooling Chamber	410,000
Air Compressor (2)	60,000
Ductwork	76,600
Dampers, supports, isolators	50,800
Direct Installation Costs	
Sitework	310,700
Mechanical Installation	
Rotary Furnaces	102,700
Piping	121,700
Cooling Chamber	450,000
Electrical Installation	290,000
Contractor Fees, Supervision., O/H and Profit	270,800
Sub-Total Direct Costs	**4,405,300**
INDIRECT COSTS	
Preliminary Engineering	55,700
Final Engineering	130,000
Start-up	18,500
Permitting	37,500
Sub-Total Indirect Costs	**241,700**
Contingency	1,041,000
TOTAL CONCEPTUAL COSTS	**$5,688,000**

Summary of Operating Cost

Energy Calculations

Electricty Useage

Rotating Motor HP	75 HP (estimated)
Misc. Electical Requirements	10 HP (estimated)
Total HP Requirements	85
Motor efficiencies	92%
Total Electricity Useage	69 KWH

Water usage

Approximate cooling required	38,000,000 MMBtu/hr (from Manf.)
Water usage=	76 gpm

Propane Usage 0 scfh

No Afterburner required. Fuel consumption is assumed to be comparable to new blast furnace.

APPENDIX G.

ISOPLETH MAPS 1987-1991

Project Name: **DOE RUN BUICK LEAD SIP MET DATA SET 1987 SHORT TERM 1 SGF MET**

POST/PLOT FILE OF PERIOD VALUES FOR SOURCE GROUP: ALL

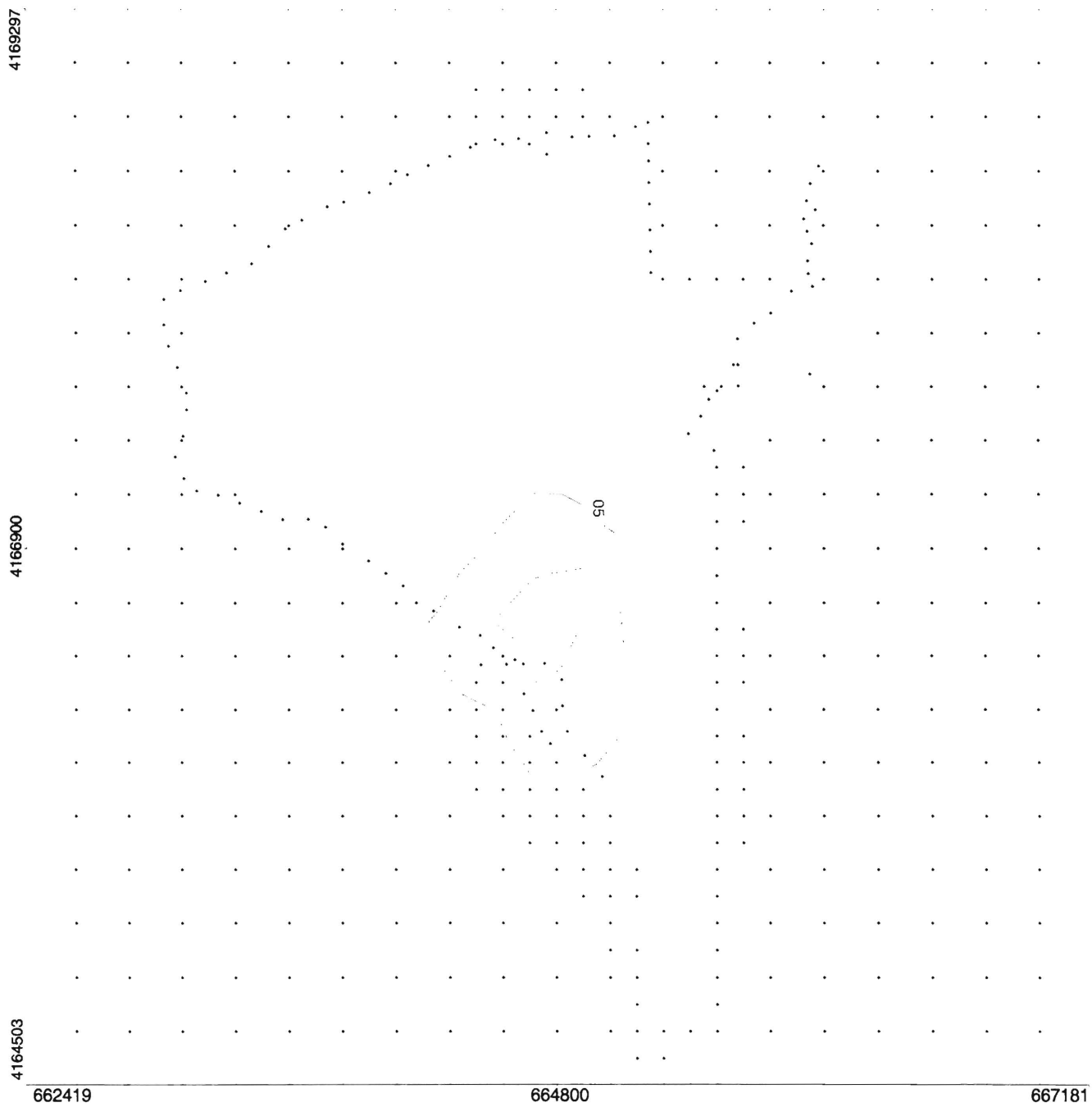

OUTPUT TYPE: **Concentration**	**NO. RECEPTORS : 524**	**DOE RUN BUICK**
MODELING OPTIONS: **CONC, RURAL, ELEV, DFAULT**	MODELER: **1987 1st QUARTER MODEL RESULTS**	
	DATE: **1/10/2000**	

ISC3 View - Ver 1.2 - Lakes Environmental Software

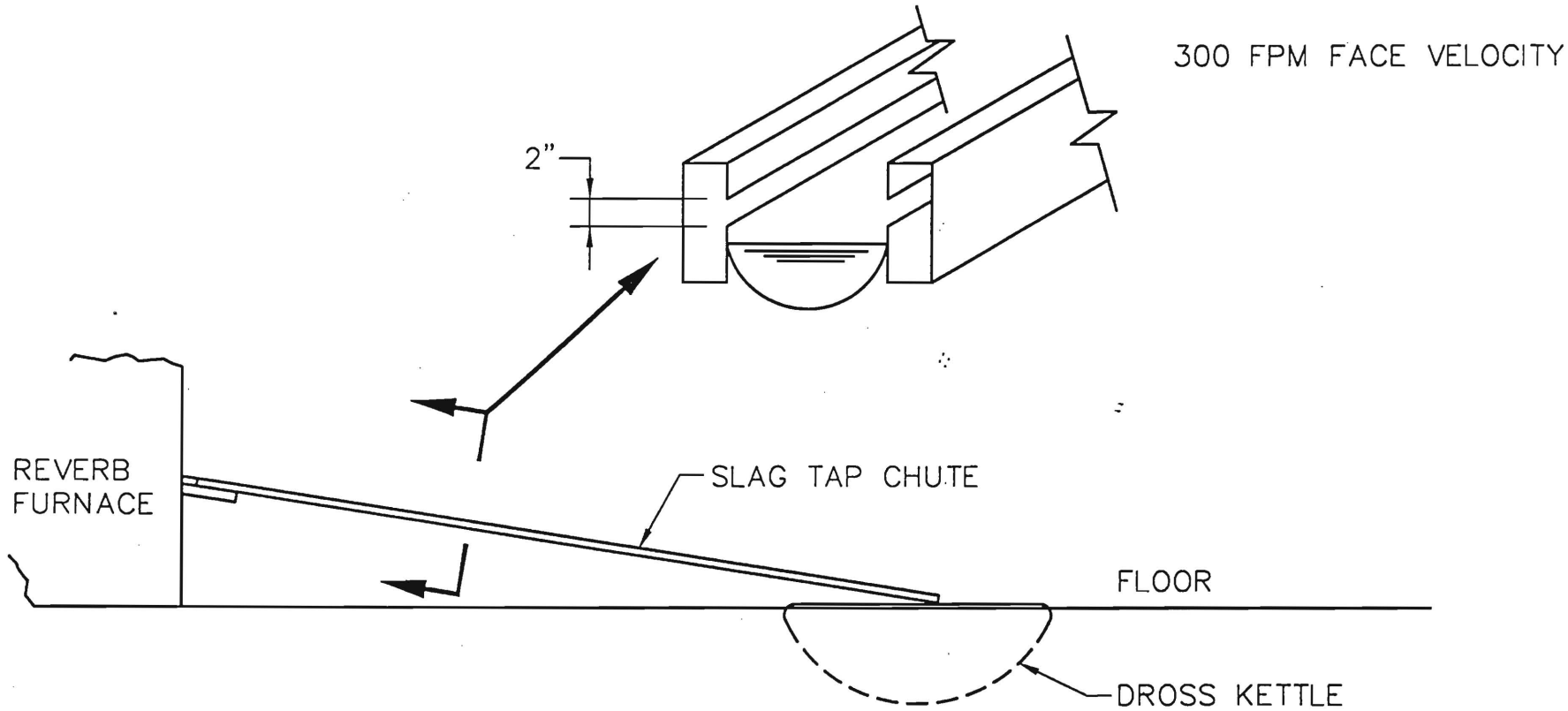

NOTE:
THE CONTRACTOR SHALL FIELD VERIFY ALL DIMENSIONS AND EXISTING CONDITIONS PRIOR TO PROCEEDING WITH ANY WORK. WHERE DISCREPANCIES OCCUR BETWEEN THESE DOCUMENTS AND EXISTING CONDITIONS, THE DISCREPANCY SHALL BE REPORTED TO THE OWNER AND/OR ENGINEER FOR EXPEDITING AND RESOLUTION.

PRELIMINARY
NOT FOR CONSTRUCTION

IES ENGINEERS

Date: 5/17/99 | File: 1652FIG2

Figure 2

DOE RUN COMPANY
BOSS, MO

OPTION 1 – LOCAL CAPTURE
SLAG TAP CHUTE

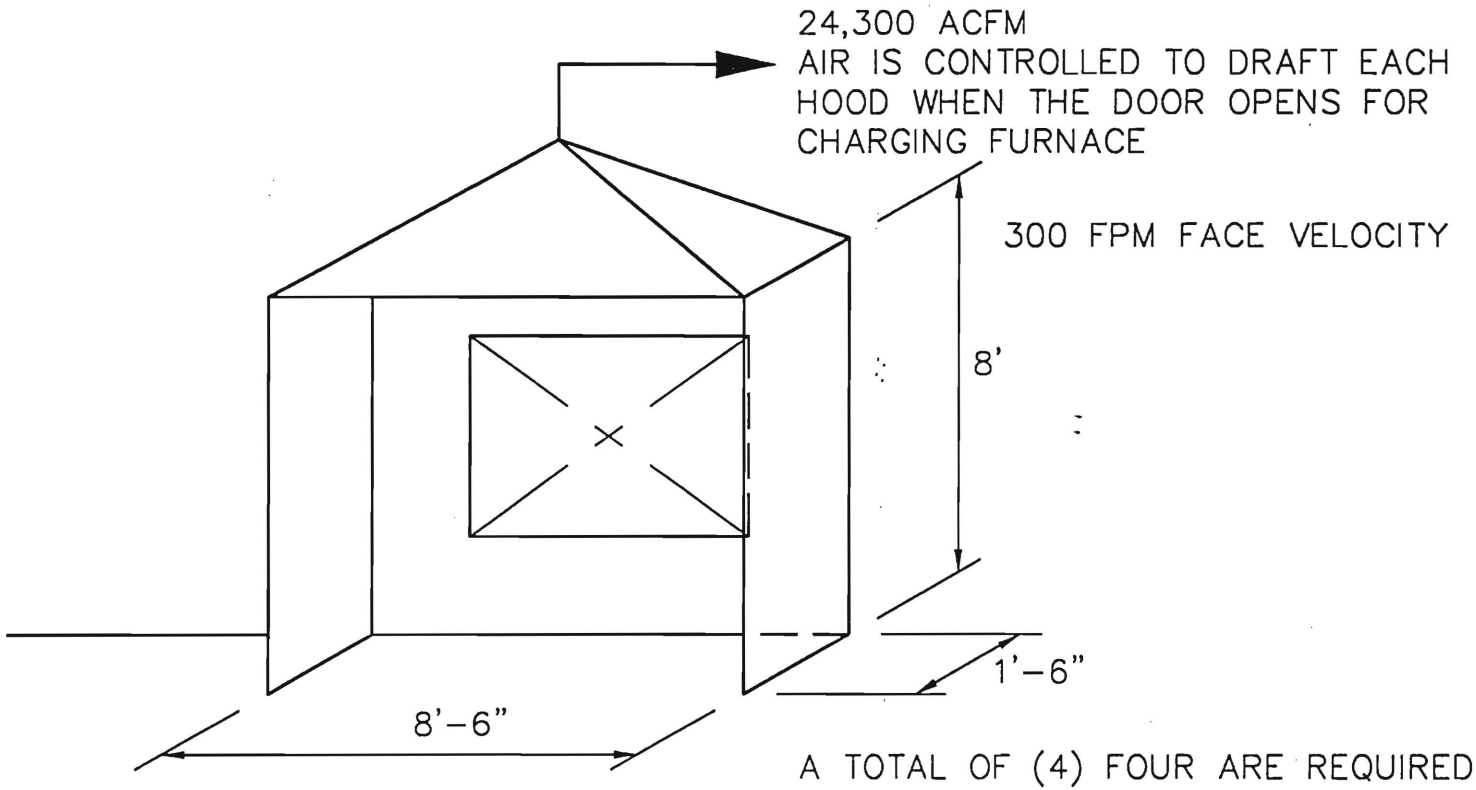

NOTE:
THE CONTRACTOR SHALL FIELD VERIFY ALL DIMENSIONS AND EXISTING CONDITIONS PRIOR TO PROCEEDING WITH ANY WORK. WHERE DISCREPANCIES OCCUR BETWEEN THESE DOCUMENTS AND EXISTING CONDITIONS, THE DISCREPANCY SHALL BE REPORTED TO THE OWNER AND/OR ENGINEER FOR EXPEDITING AND RESOLUTION.

PRELIMINARY
NOT FOR CONSTRUCTION

ENGINEERS

Date:	File:
5/17/99	1652FIG3

Figure 3

DOE RUN COMPANY
BOSS, MO

OPTION 1 – LOCAL CAPTURE
SWEAT FURNACE CHARGING CAPACITY

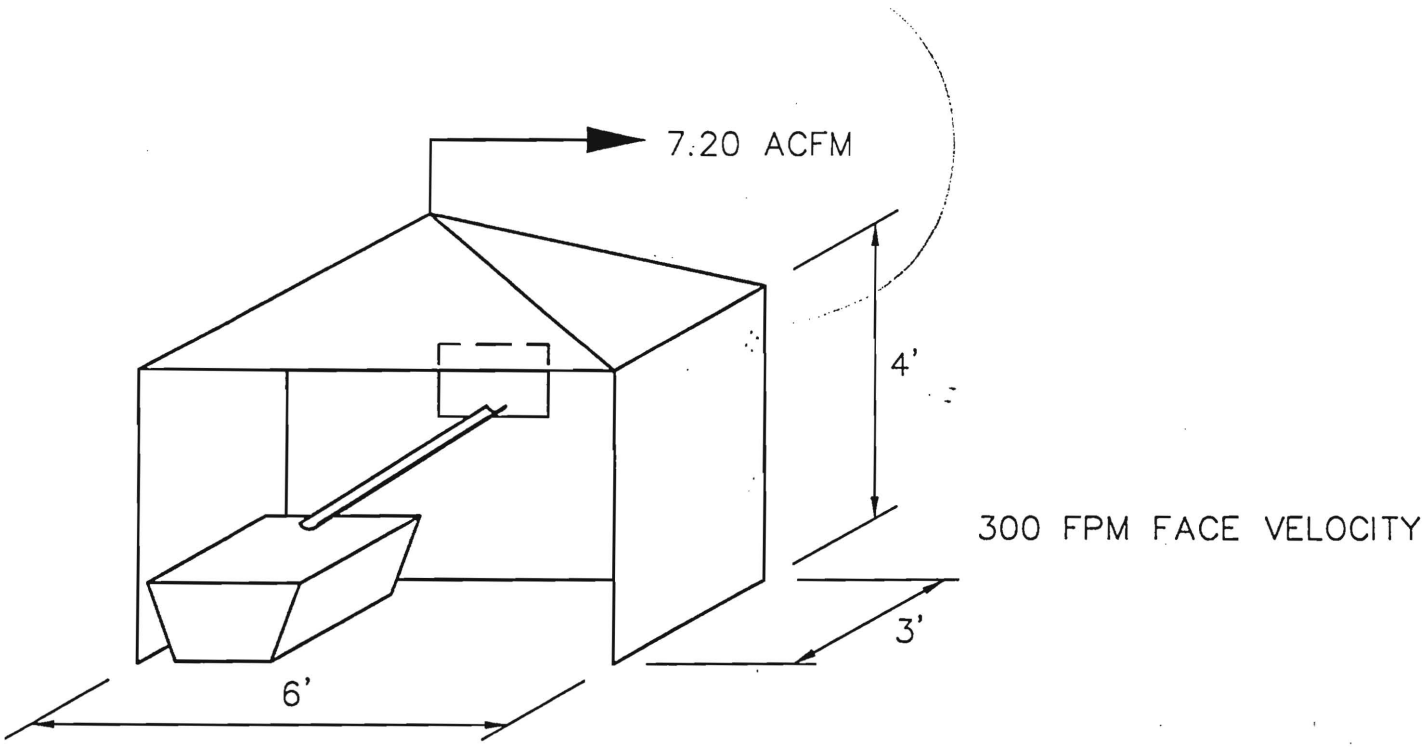

NOTE:
THE CONTRACTOR SHALL FIELD VERIFY ALL DIMENSIONS AND EXISTING CONDITIONS PRIOR TO PROCEEDING WITH ANY WORK. WHERE DISCREPANCIES OCCUR BETWEEN THESE DOCUMENTS AND EXISTING CONDITIONS, THE DISCREPANCY SHALL BE REPORTED TO THE OWNER AND/OR ENGINEER FOR EXPEDITING AND RESOLUTION.

PRELIMINARY
NOT FOR CONSTRUCTION

iES ENGINEERS

Date:	File:
5/17/99	1652FIG4

Figure 4

DOE RUN COMPANY
BOSS, MO

OPTION 1 – LOCAL CAPTURE
SWEAT FURNACE TAP AND MOLD CANOPY

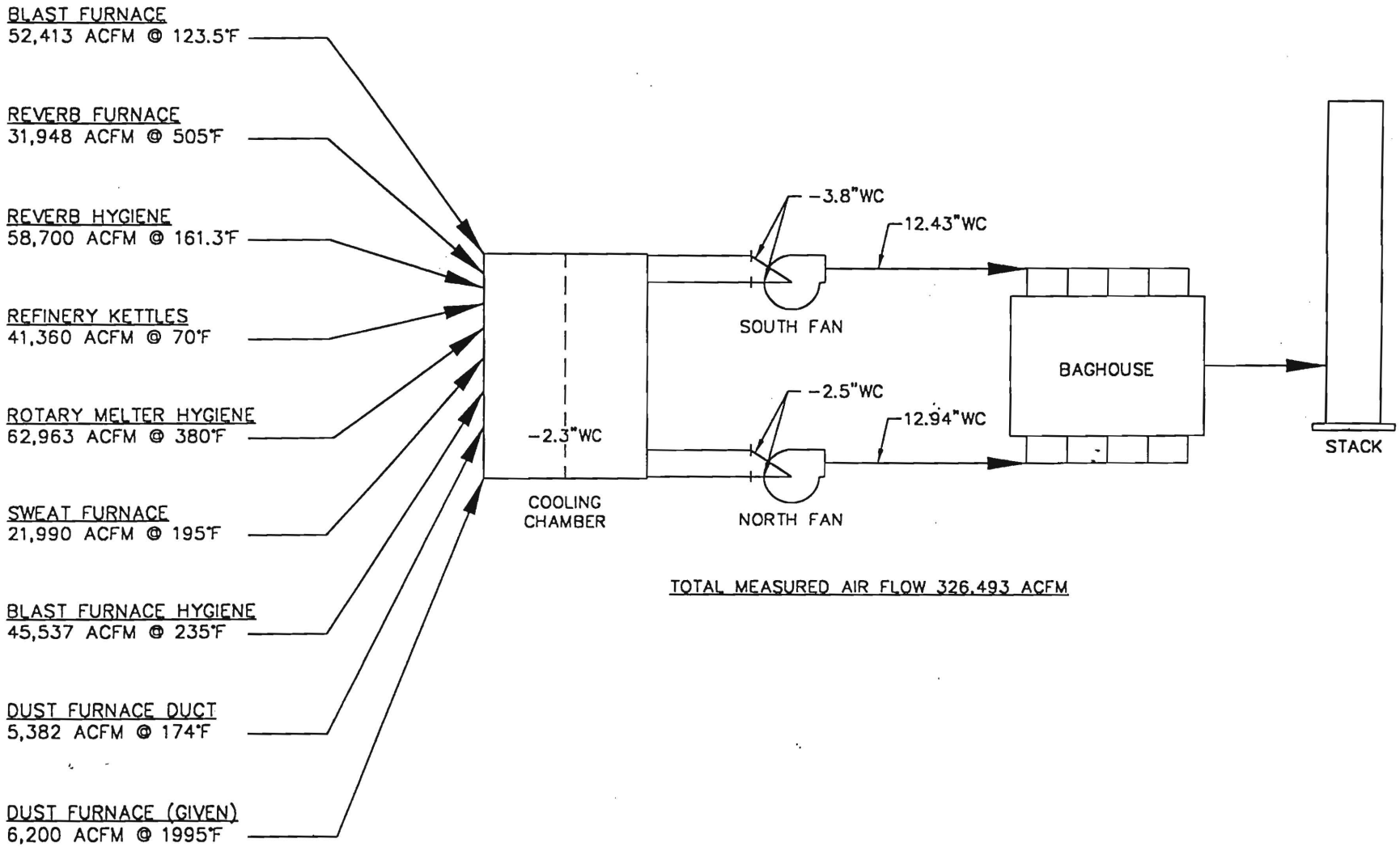

NOTE:
THE CONTRACTOR SHALL FIELD VERIFY ALL DIMENSIONS AND EXISTING CONDITIONS PRIOR TO PROCEEDING WITH ANY WORK. WHERE DISCREPANCIES OCCUR BETWEEN THESE DOCUMENTS AND EXISTING CONDITIONS, THE DISCREPANCY SHALL BE REPORTED TO THE OWNER AND/OR ENGINEER FOR EXPEDITING AND RESOLUTION.

PRELIMINARY
NOT FOR CONSTRUCTION

IES ENGINEERS

Date: 5/18/99 | File: 1652FIG6

Figure 6

DOE RUN COMPANY
BOSS, MO

AIR FLOW SURVEY
FLOW DIAGRAM

Project Name: **DOE RUN BUICK LEAD SIP MET DATA SET 1987 SHORT TERM 1 SGF MET**

POST/PLOT FILE OF PERIOD VALUES FOR SOURCE GROUP: ALL

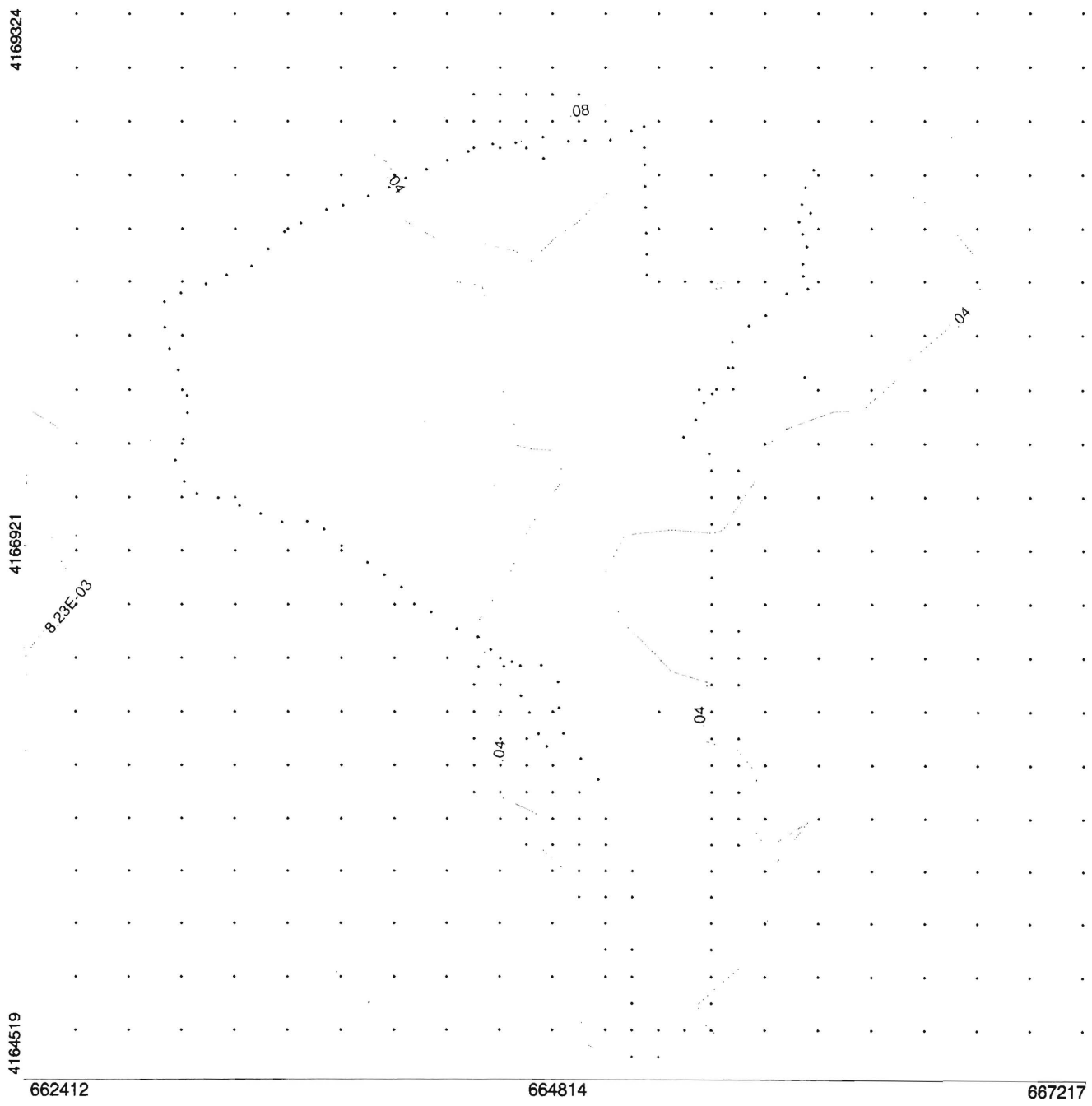

OUTPUT TYPE: **Concentration**	**NO. RECEPTORS : 525**	**DOE RUN BUICK**
MODELING OPTIONS: **CONC, RURAL, ELEV, DFAULT**	MODELER: **1987 2nd QUARTER MODEL RESULTS**	
	DATE: **1/10/2000**	

ISC3 View - Ver 1.2 - Lakes Environmental Software

Project Name: **DOE RUN BUICK LEAD SIP MET DATA SET 1987 SHORT TERM 1 SGF MET**

POST/PLOT FILE OF PERIOD VALUES FOR SOURCE GROUP: ALL

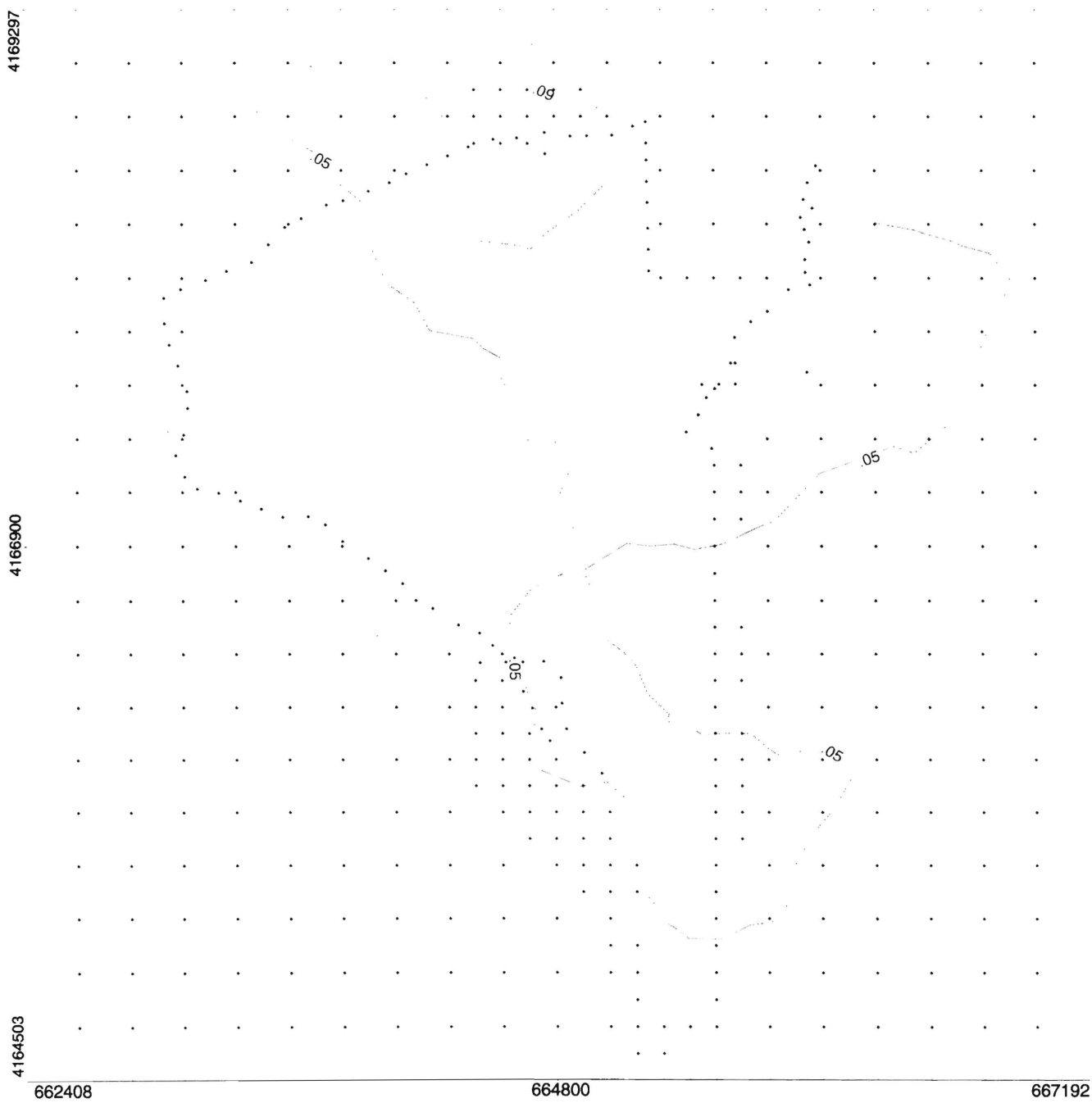

OUTPUT TYPE: **Concentration**	**NO. RECEPTORS : 524**	**DOE RUN BUICK**
MODELING OPTIONS: **CONC, RURAL, ELEV, DFAULT**	MODELER: **1987 3rd QUARTER MODEL RESULTS**	
	DATE: **1/10/2000**	

ISC3 View - Ver 1.2 - Lakes Environmental Software

Project Name: **DOE RUN BUICK LEAD SIP MET DATA SET 1987 SHORT TERM 1 SGF MET**

POST/PLOT FILE OF PERIOD VALUES FOR SOURCE GROUP: ALL

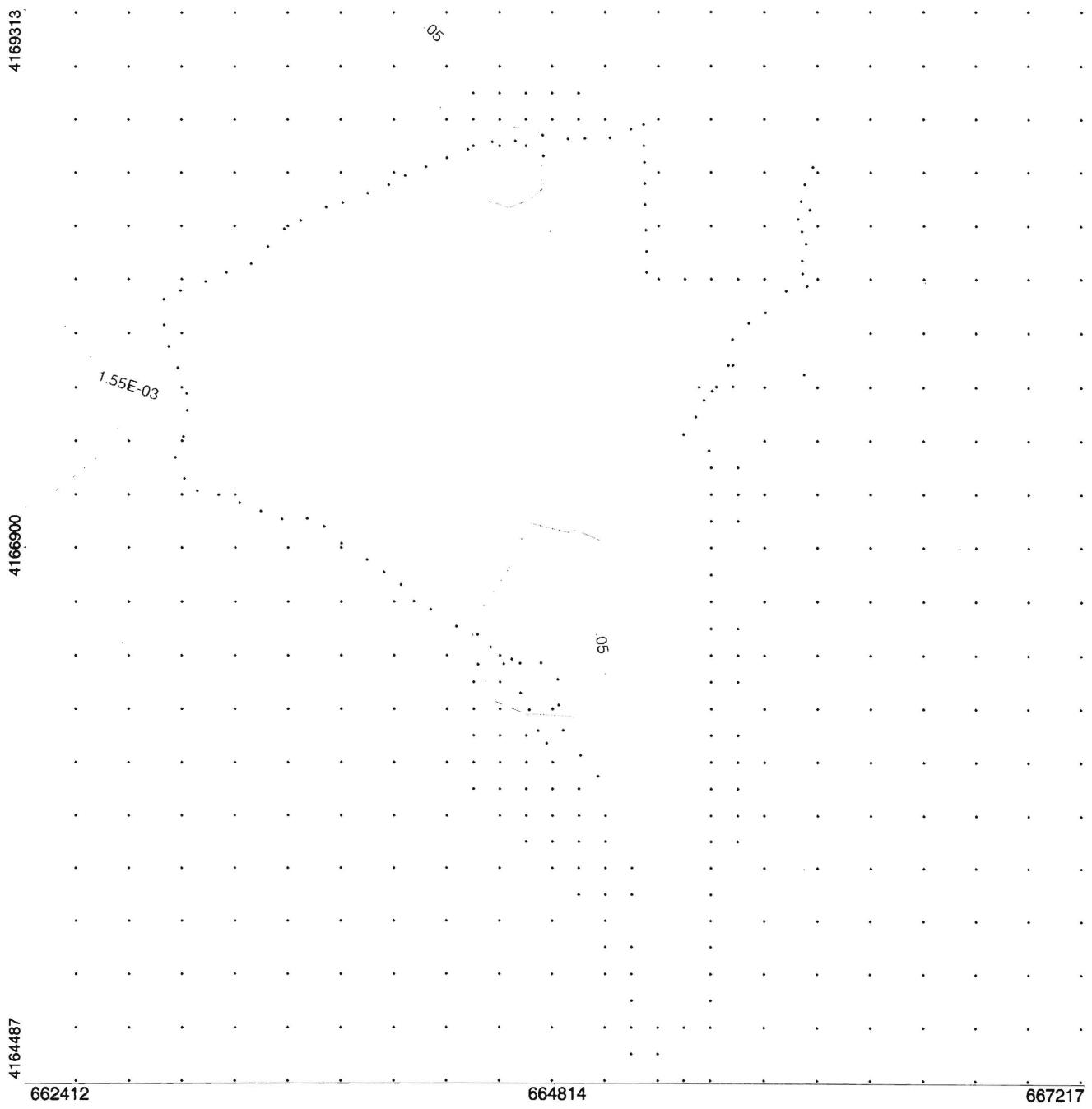

OUTPUT TYPE: **Concentration**	**NO. RECEPTORS : 525**	**DOE RUN BUICK**
MODELING OPTIONS: **CONC, RURAL, ELEV, DFAULT**		MODELER: **1987 4th QUARTER MODEL RESULTS**
		DATE: **1/10/2000**

ISC3 View - Ver 1.2 - Lakes Environmental Software

Project Name: **DOE RUN BUICK LEAD SIP MET DATA SET 1988 SHORT TERM 1 SGF MET**

POST/PLOT FILE OF PERIOD VALUES FOR SOURCE GROUP: ALL

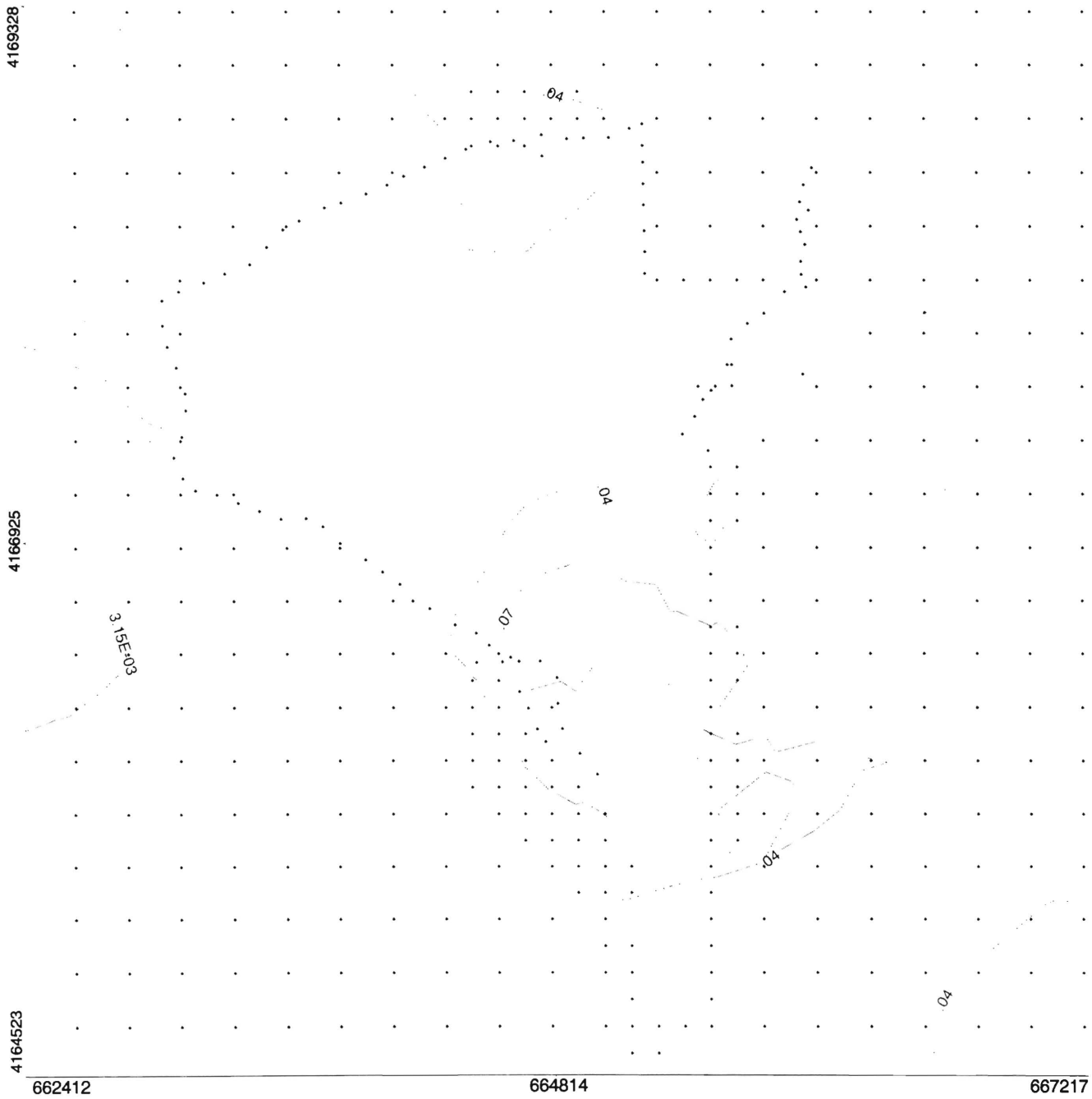

OUTPUT TYPE: **Concentration**	**NO. RECEPTORS : 524**	**DOE RUN BUICK**
MODELING OPTIONS: **CONC, RURAL, ELEV, DFAULT**		MODELER: **1988 1st QUARTER MODEL RESULTS**
		DATE: **1/10/2000**

ISC3 View - Ver 1.2 - Lakes Environmental Software

Project Name: **DOE RUN BUICK LEAD SIP MET DATA SET 1988 SHORT TERM 1 SGF MET**

POST/PLOT FILE OF PERIOD VALUES FOR SOURCE GROUP: ALL

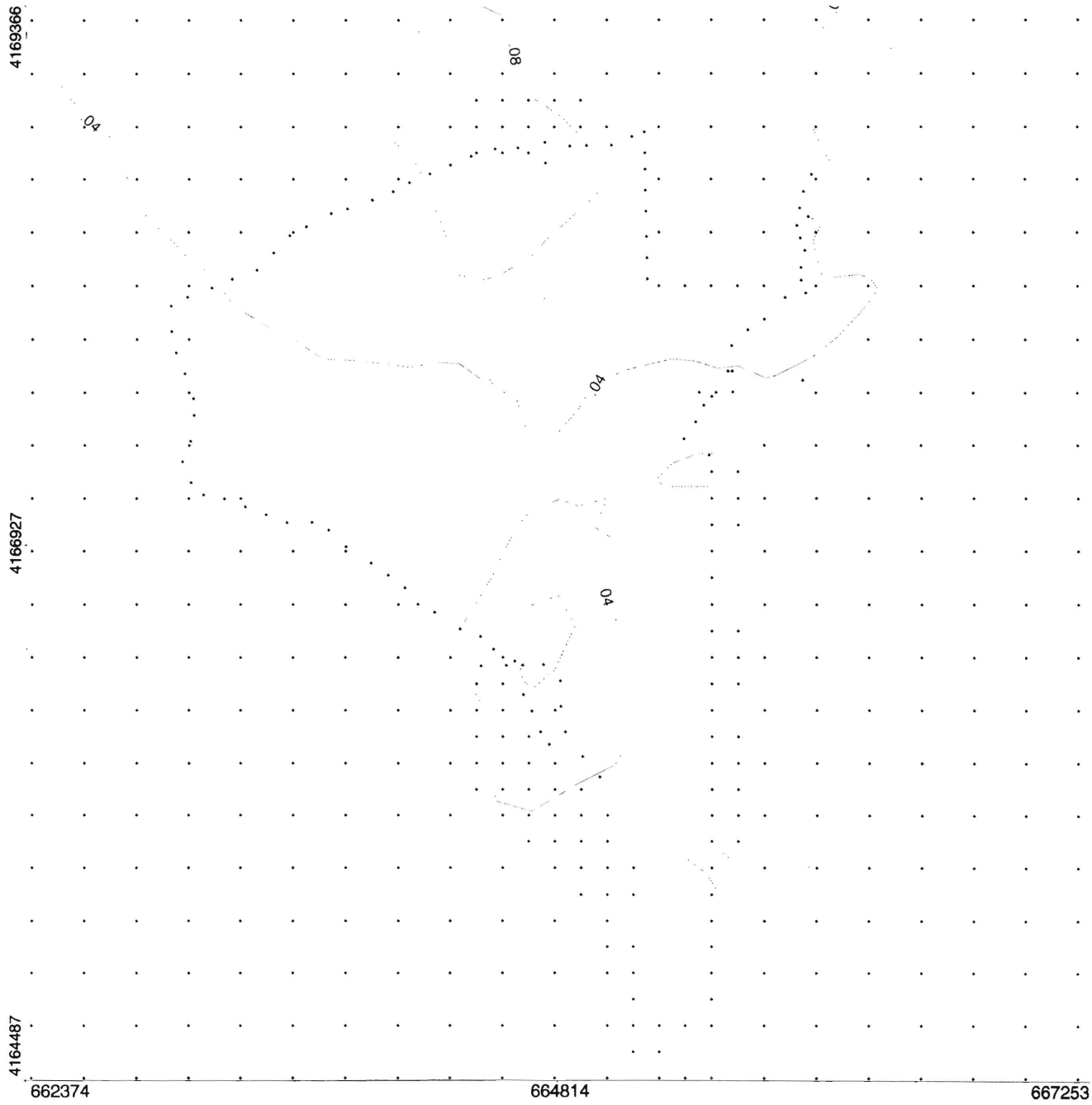

OUTPUT TYPE: **Concentration**	**NO. RECEPTORS : 524**	**DOE RUN BUICK**
MODELING OPTIONS: **CONC, RURAL, ELEV, DFAULT**	MODELER: **1988 2nd QUARTER MODEL RESULTS**	
	DATE: **1/10/2000**	

ISC3 View - Ver 1.2 - Lakes Environmental Software

Project Name: **DOE RUN BUICK LEAD SIP MET DATA SET 1988 SHORT TERM 1 SGF MET**

POST/PLOT FILE OF PERIOD VALUES FOR SOURCE GROUP: ALL

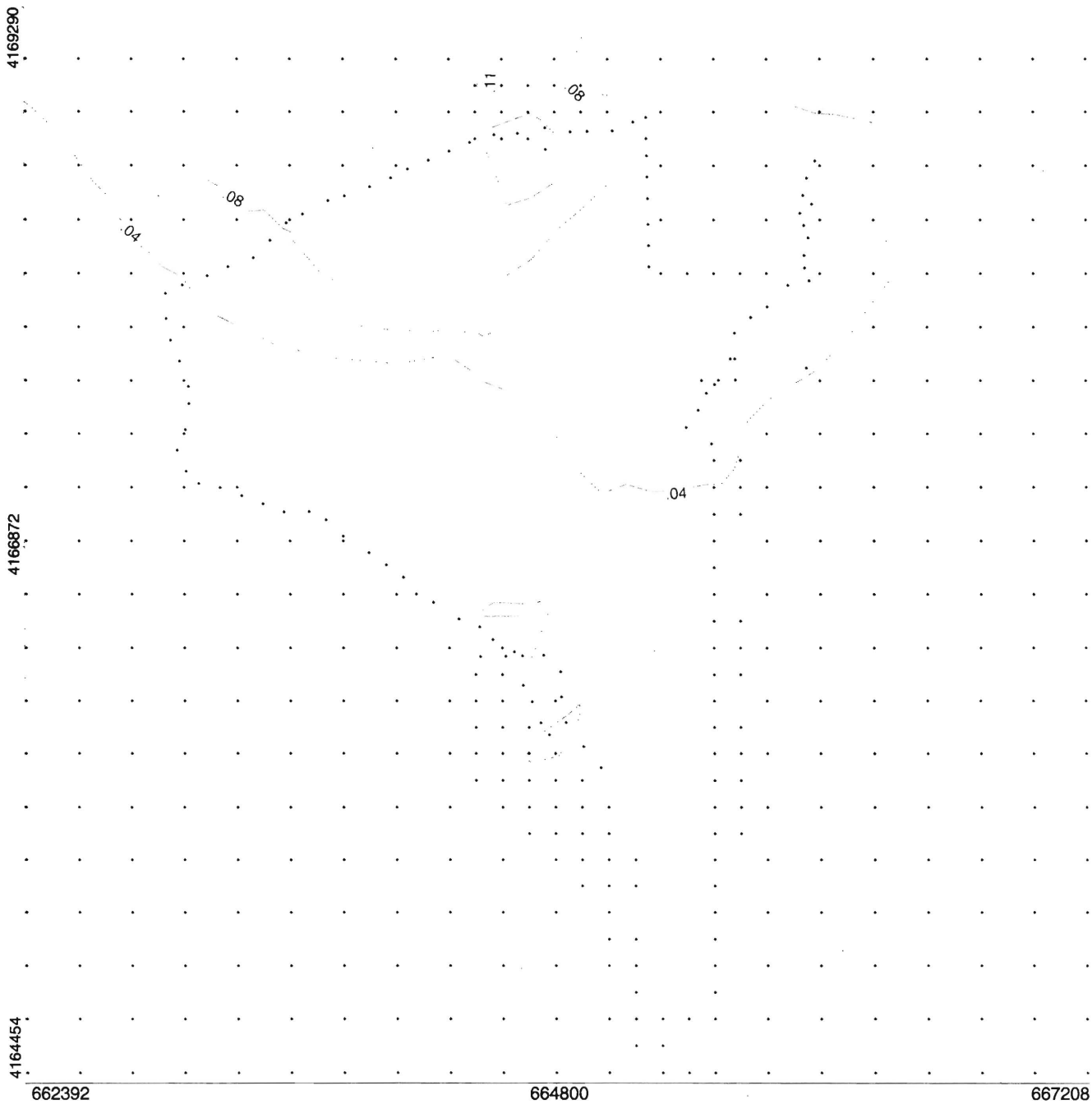

OUTPUT TYPE: **Concentration**	**NO. RECEPTORS : 524**	**DOE RUN BUICK**
MODELING OPTIONS: **CONC, RURAL, ELEV, DFAULT**	MODELER: **1988 3rd QUARTER MODEL RESULTS**	
	DATE: **1/10/2000**	

ISC3 View - Ver 1.2 - Lakes Environmental Software

Project Name: **DOE RUN BUICK LEAD SIP MET DATA SET 1988 SHORT TERM 1 SGF MET**

POST/PLOT FILE OF PERIOD VALUES FOR SOURCE GROUP: ALL

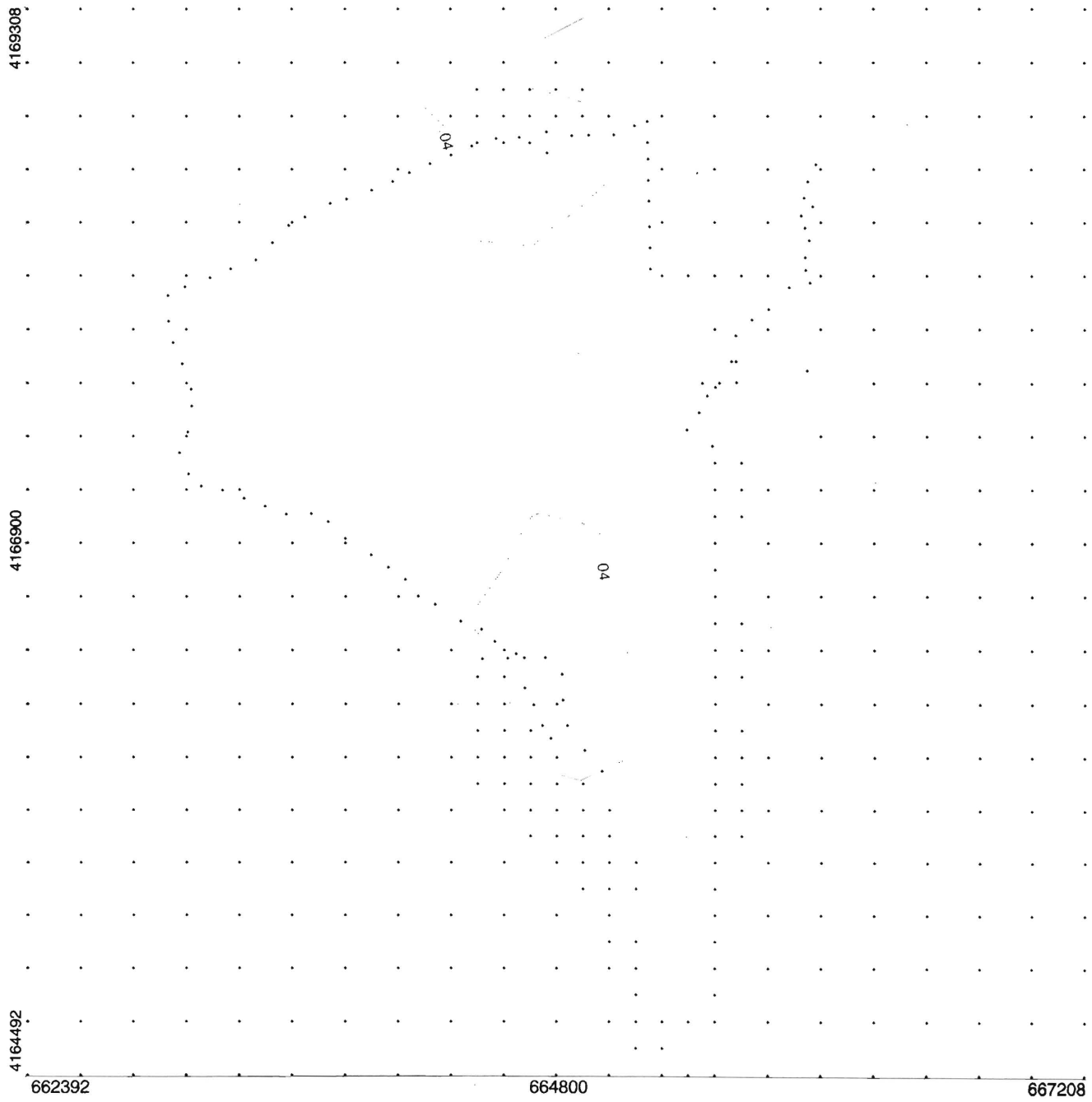

OUTPUT TYPE: **Concentration**	**NO. RECEPTORS : 525**	**DOE RUN BUICK**
MODELING OPTIONS: **CONC, RURAL, ELEV, DFAULT**	MODELER: **1988 4th QUARTER MODEL RESULTS**	
	DATE: **1/10/2000**	

ISC3 View - Ver 1.2 - Lakes Environmental Software

Project Name: **DOE RUN BUICK LEAD SIP MET DATA SET 1989 SHORT TERM 1 SGF MET**

POST/PLOT FILE OF PERIOD VALUES FOR SOURCE GROUP: ALL

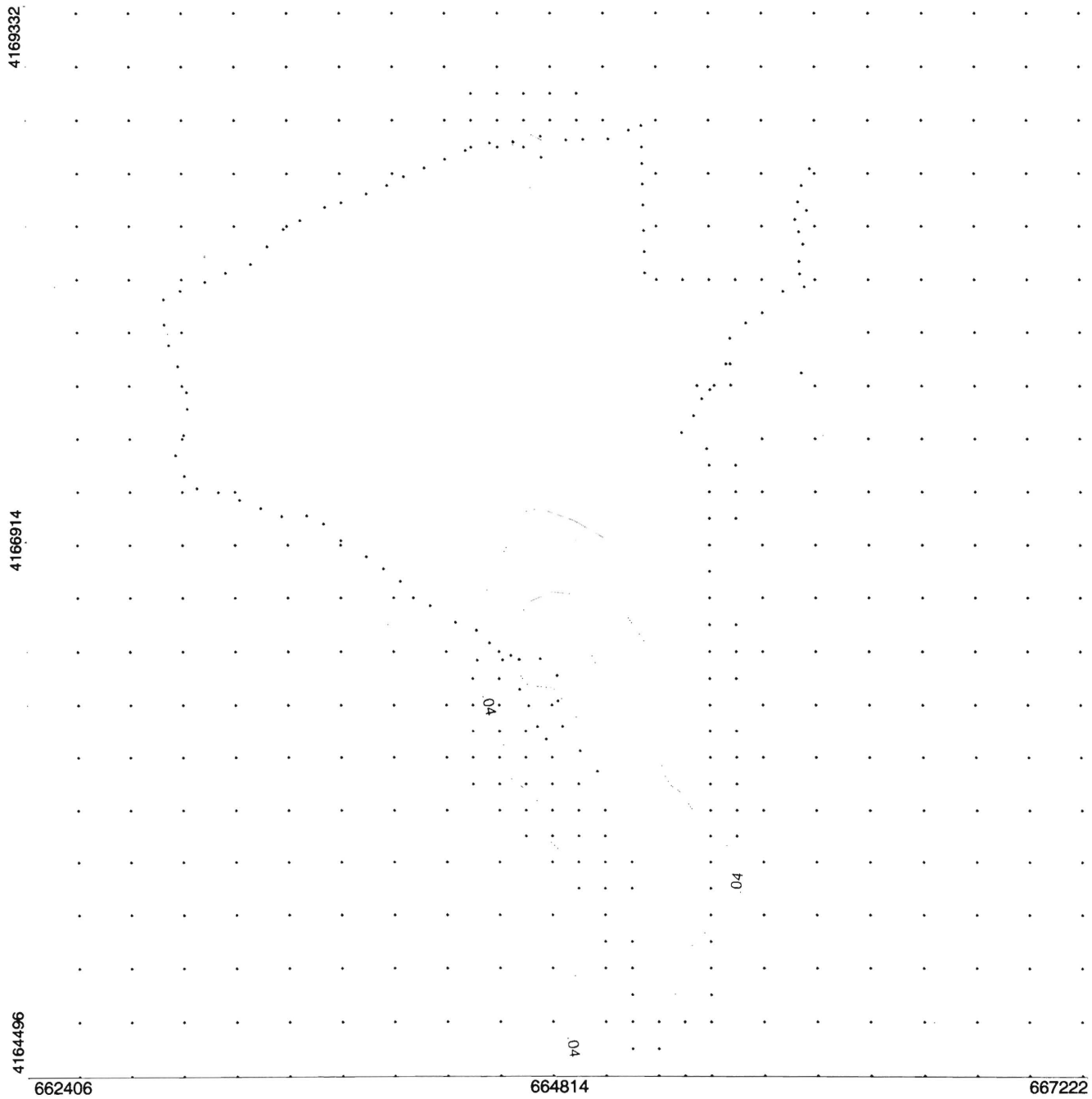

OUTPUT TYPE: **Concentration**	**NO. RECEPTORS : 524**	**DOE RUN BUICK**
MODELING OPTIONS: **CONC, RURAL, ELEV, DFAULT**	MODELER: **1989 1st QUARTER MODEL RESULTS**	
	DATE: **1/10/2000**	

ISC3 View - Ver 1.2 - Lakes Environmental Software

Project Name: **DOE RUN BUICK LEAD SIP MET DATA SET 1989 SHORT TERM 1 SGF MET**

POST/PLOT FILE OF PERIOD VALUES FOR SOURCE GROUP: ALL

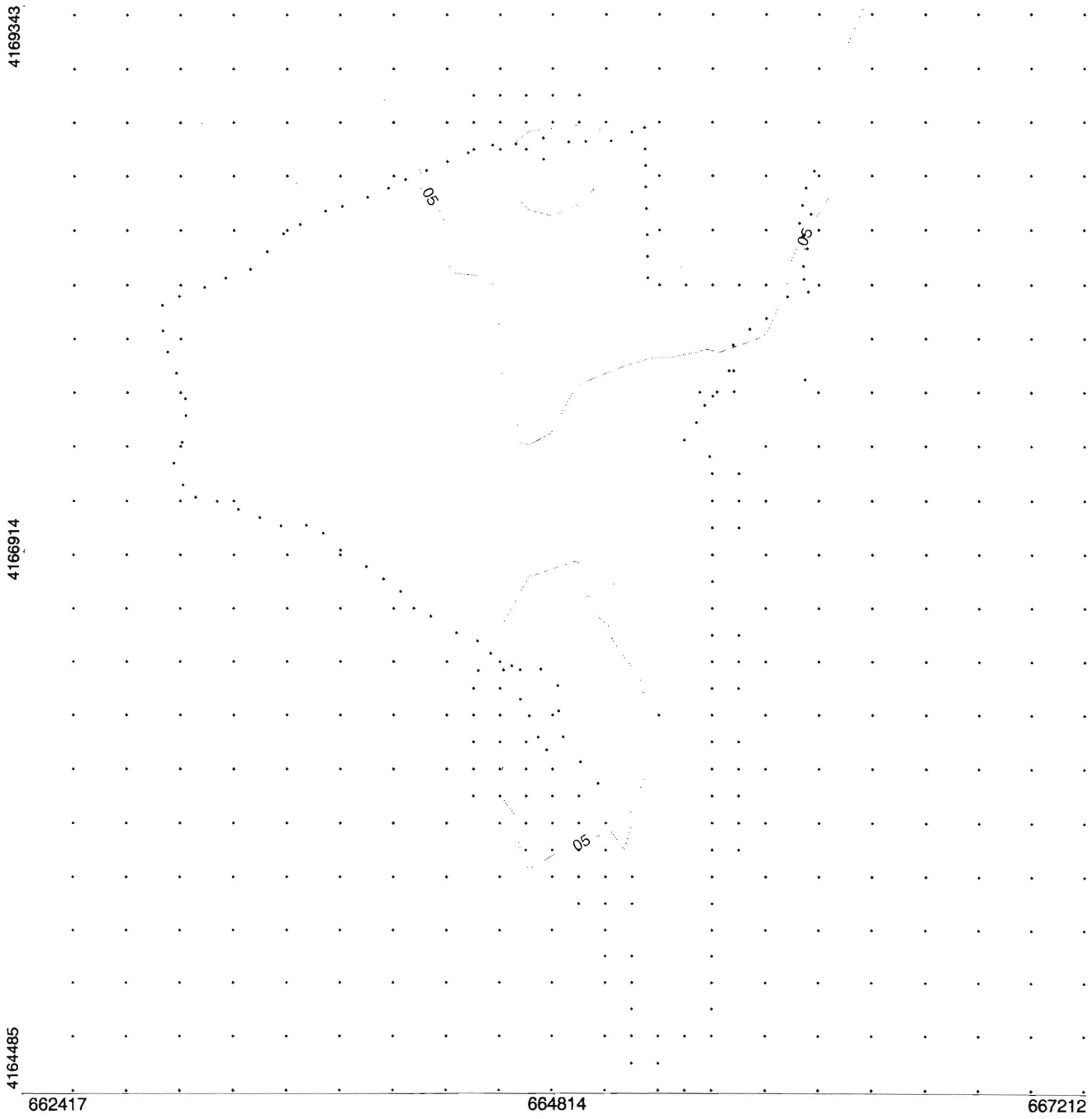

OUTPUT TYPE: **Concentration**	**NO. RECEPTORS : 525**	**DOE RUN BUICK**
MODELING OPTIONS: **CONC, RURAL, ELEV, DFAULT**	MODELER: **1989 2nd QUARTER MODEL RESULTS**	
	DATE: **1/10/2000**	

ISC3 View - Ver 1.2 - Lakes Environmental Software

Project Name: **DOE RUN BUICK LEAD SIP MET DATA SET 1989 SHORT TERM 1 SGF MET**

POST/PLOT FILE OF PERIOD VALUES FOR SOURCE GROUP: ALL

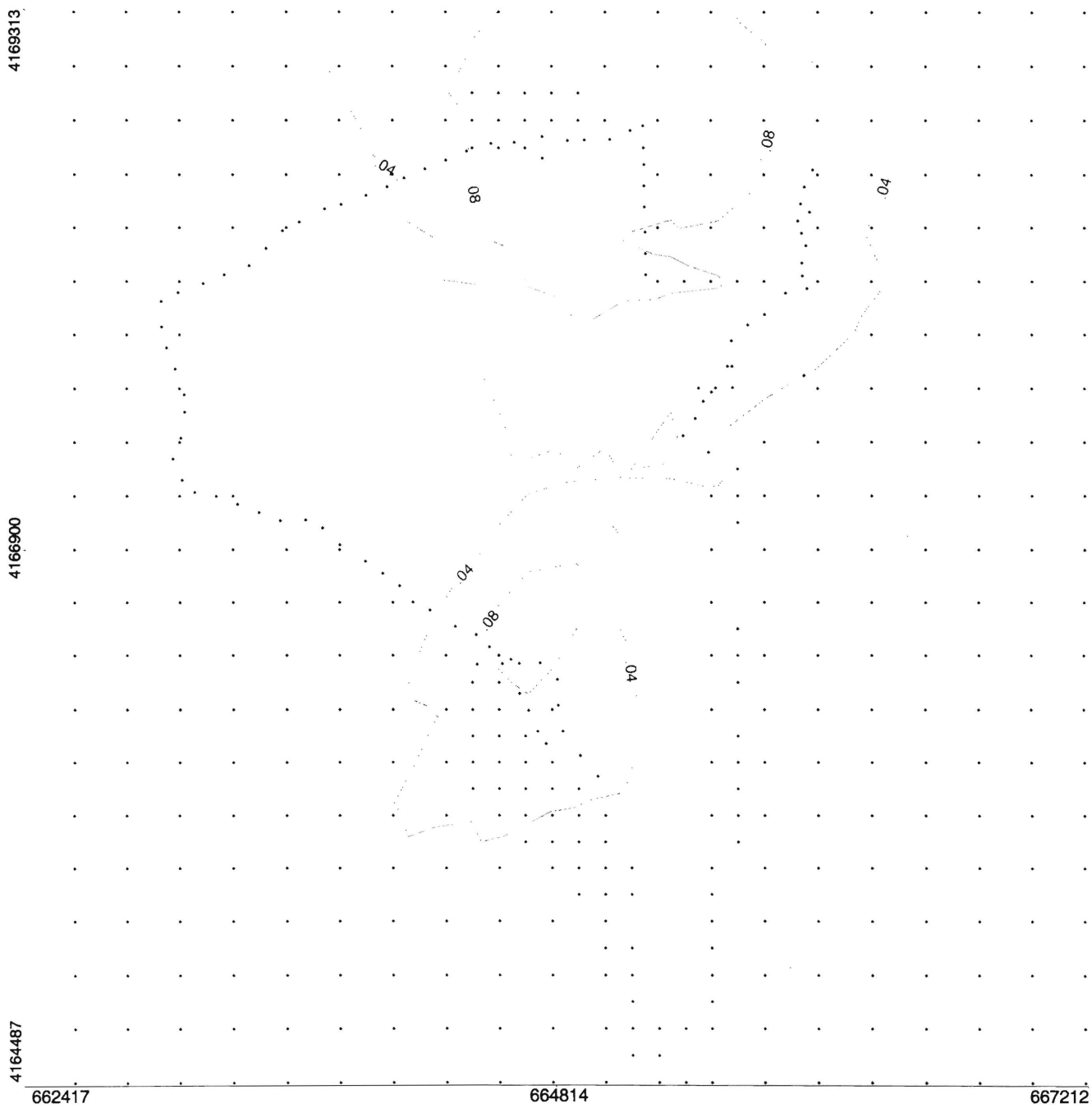

OUTPUT TYPE: **Concentration**	**NO. RECEPTORS : 516**	**DOE RUN BUICK**
MODELING OPTIONS: **CONC, RURAL, ELEV, DFAULT**	MODELER: **1989 3rd QUARTER MODEL RESULTS**	
	DATE: **1/10/2000**	

ISC3 View - Ver 1.2 - Lakes Environmental Software

Project Name: **DOE RUN BUICK LEAD SIP MET DATA SET 1989 SHORT TERM 1 SGF MET**

POST/PLOT FILE OF PERIOD VALUES FOR SOURCE GROUP: ALL

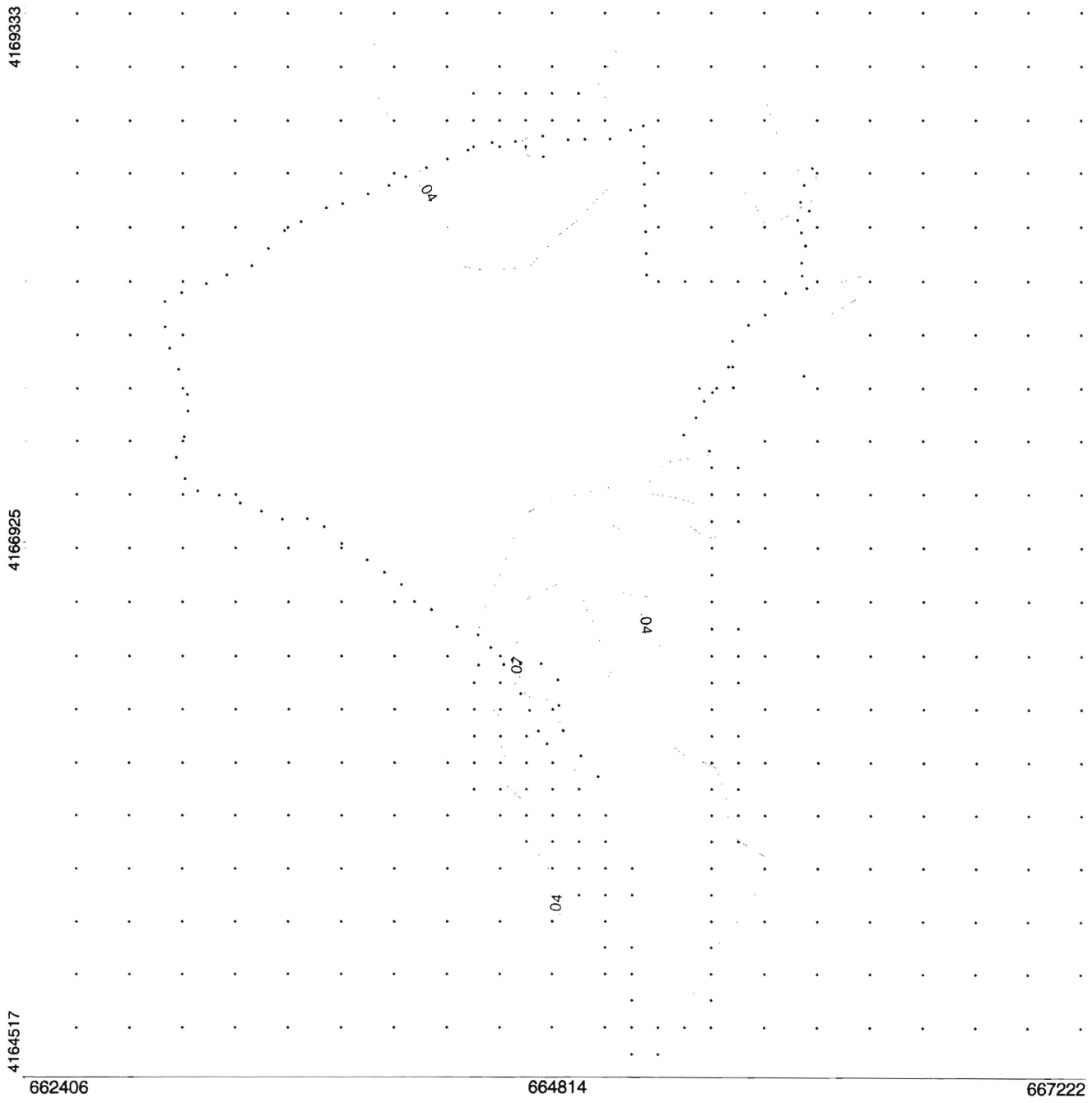

OUTPUT TYPE: **Concentration**	**NO. RECEPTORS : 524**	**DOE RUN BUICK**
MODELING OPTIONS: **CONC, RURAL, ELEV, DFAULT**	MODELER: **1989 4th QUARTER MODEL RESULTS**	
	DATE: **1/10/2000**	

ISC3 View - Ver 1.2 - Lakes Environmental Software

Project Name: **DOE RUN BUICK LEAD SIP MET DATA SET 1990 SHORT TERM 1 SGF MET**

POST/PLOT FILE OF PERIOD VALUES FOR SOURCE GROUP: ALL

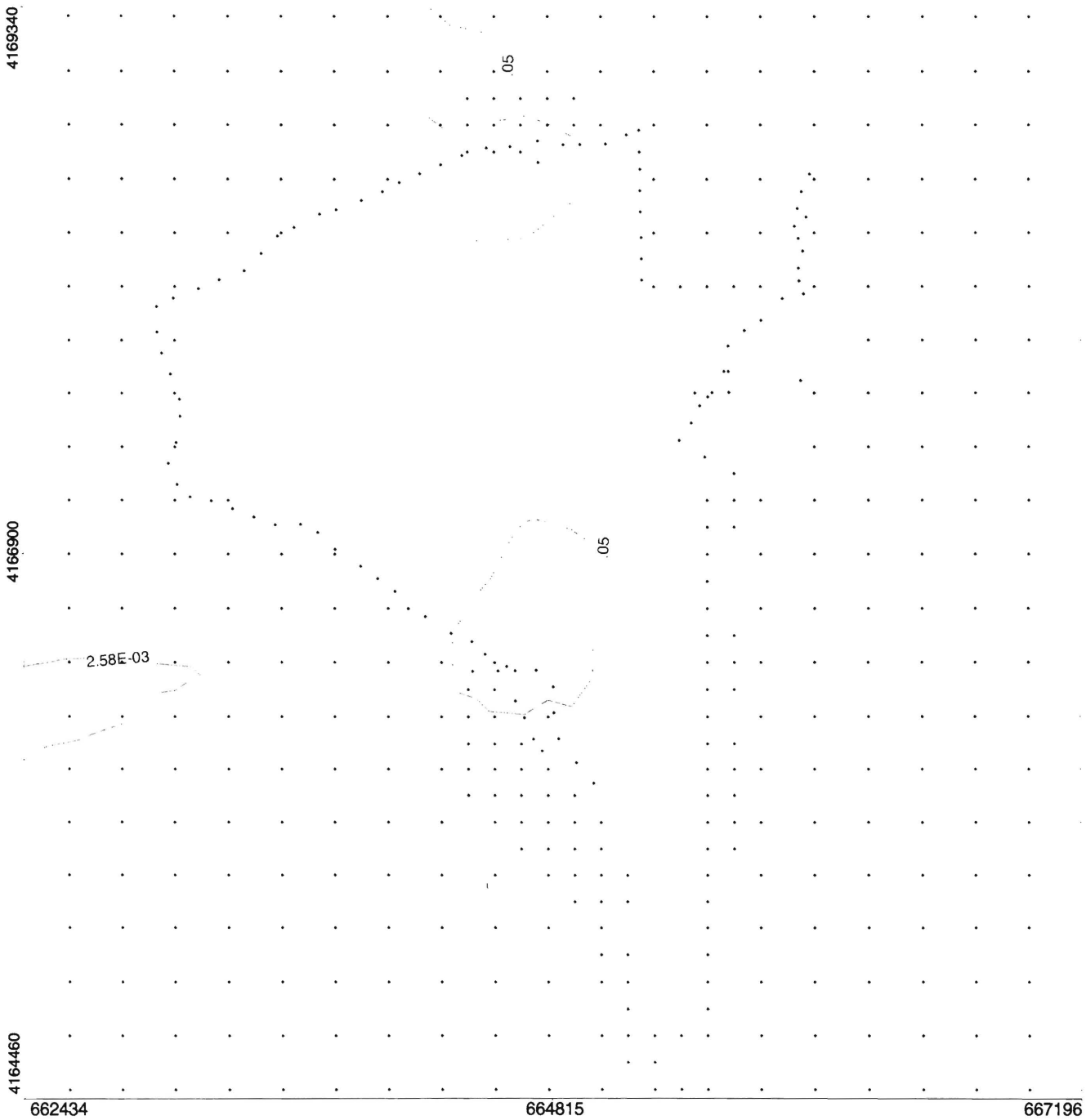

OUTPUT TYPE: **Concentration**	**NO. RECEPTORS : 522**	**DOE RUN BUICK**
MODELING OPTIONS: **CONC, RURAL, ELEV, DFAULT**	MODELER: **1990 1st QUARTER MODEL RESULTS**	
	DATE: **1/10/2000**	

ISC3 View - Ver 1.2 - Lakes Environmental Software

Project Name: **DOE RUN BUICK LEAD SIP MET DATA SET 1990 SHORT TERM 1 SGF MET**

POST/PLOT FILE OF PERIOD VALUES FOR SOURCE GROUP: ALL

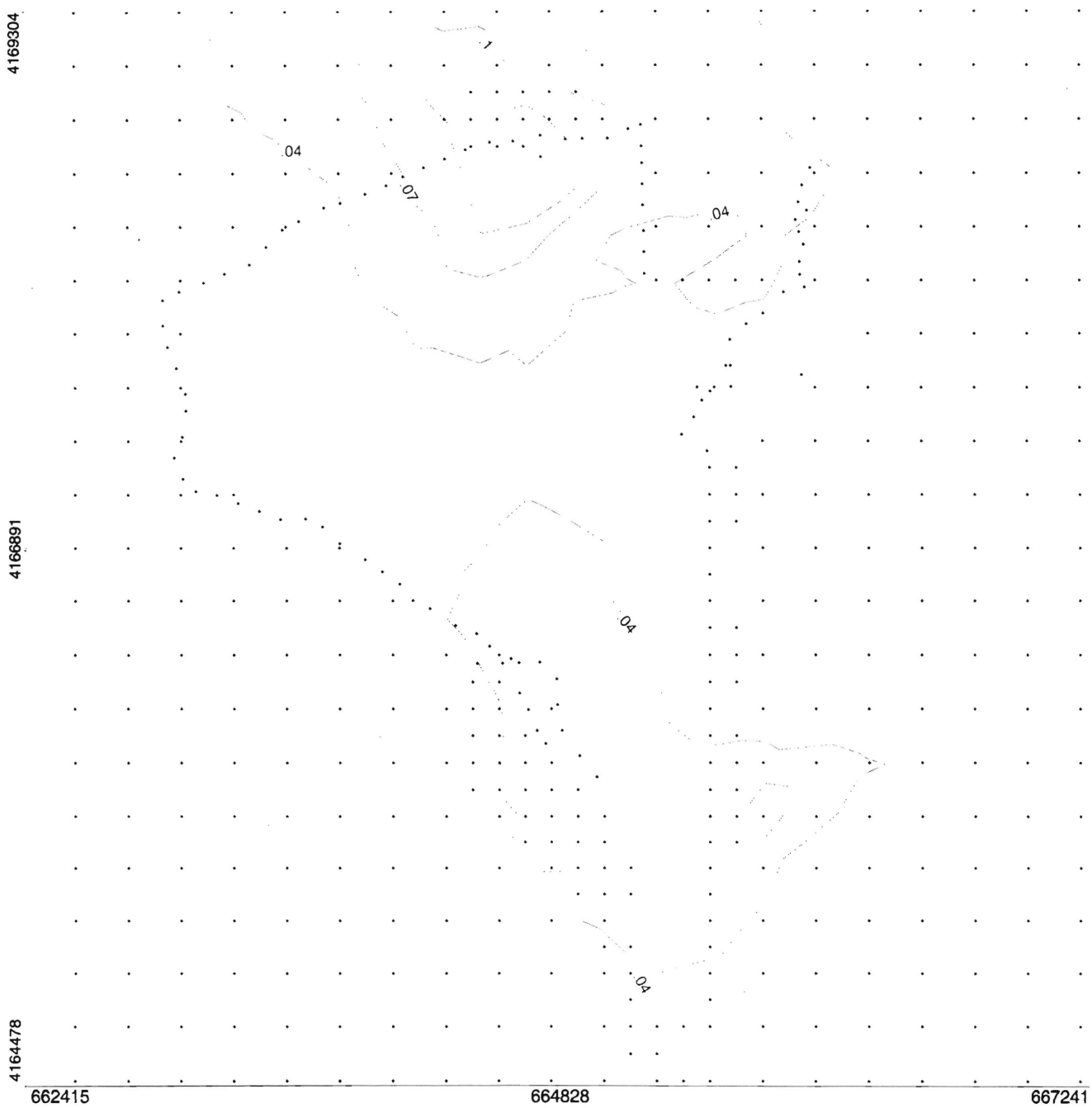

OUTPUT TYPE: **Concentration**	**NO. RECEPTORS : 524**	**DOE RUN BUICK**
MODELING OPTIONS: **CONC, RURAL, ELEV, DFAULT**	MODELER: **1990 2nd QUARTER MODEL RESULTS**	
	DATE: **1/10/2000**	

ISC3 View - Ver 1.2 - Lakes Environmental Software

Project Name: **DOE RUN BUICK LEAD SIP MET DATA SET 1990 SHORT TERM 1 SGF MET**

POST/PLOT FILE OF PERIOD VALUES FOR SOURCE GROUP: ALL

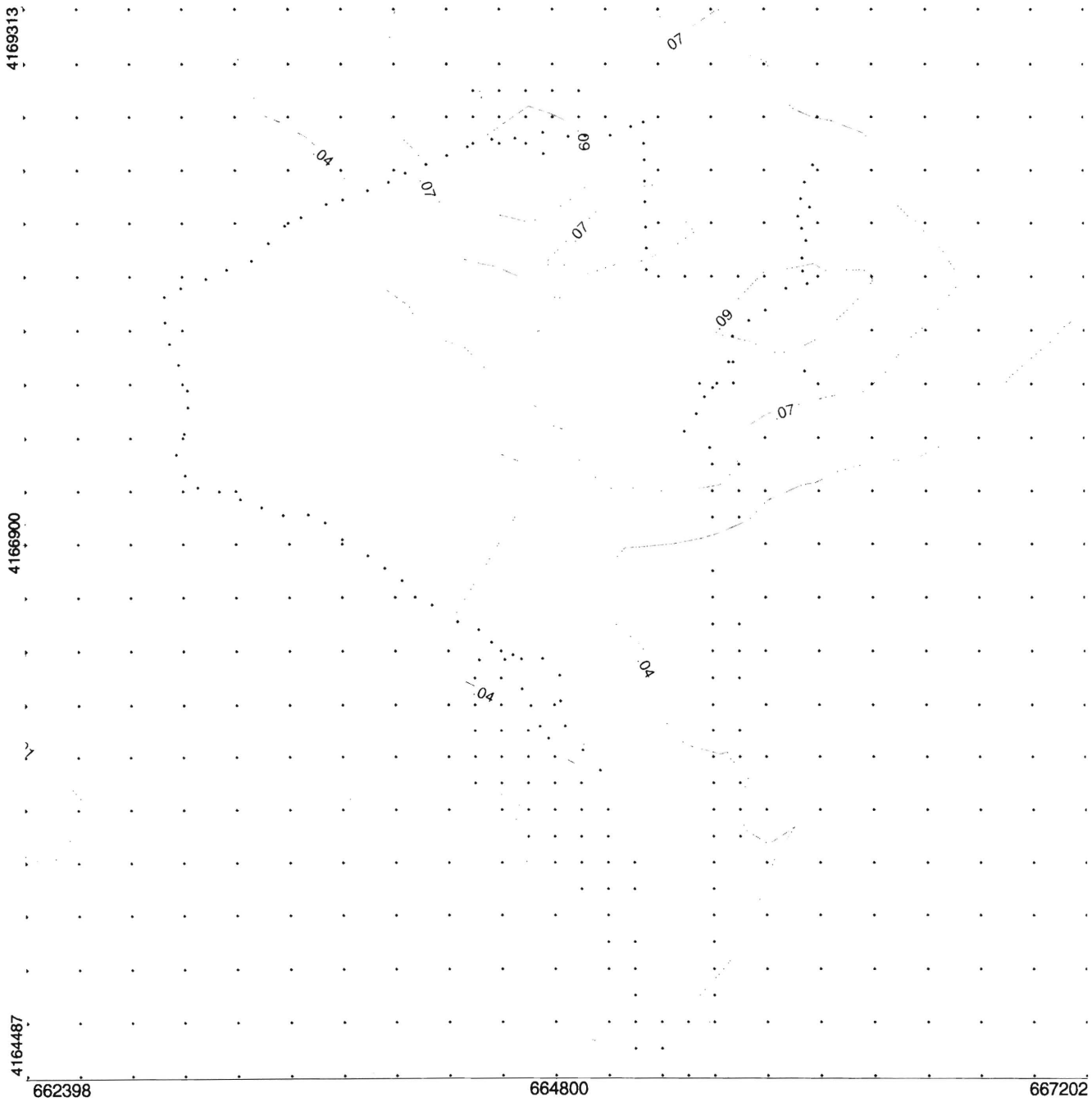

OUTPUT TYPE: **Concentration**	**NO. RECEPTORS : 523**	**DOE RUN BUICK**
MODELING OPTIONS: **CONC, RURAL, ELEV, DFAULT**	MODELER: **1990 3rd QUARTER MODEL RESULTS**	
	DATE: **1/10/2000**	

ISC3 View - Ver 1.2 - Lakes Environmental Software

Project Name: **DOE RUN BUICK LEAD SIP MET DATA SET 1990 SHORT TERM 1 SGF MET**

POST/PLOT FILE OF PERIOD VALUES FOR SOURCE GROUP: ALL

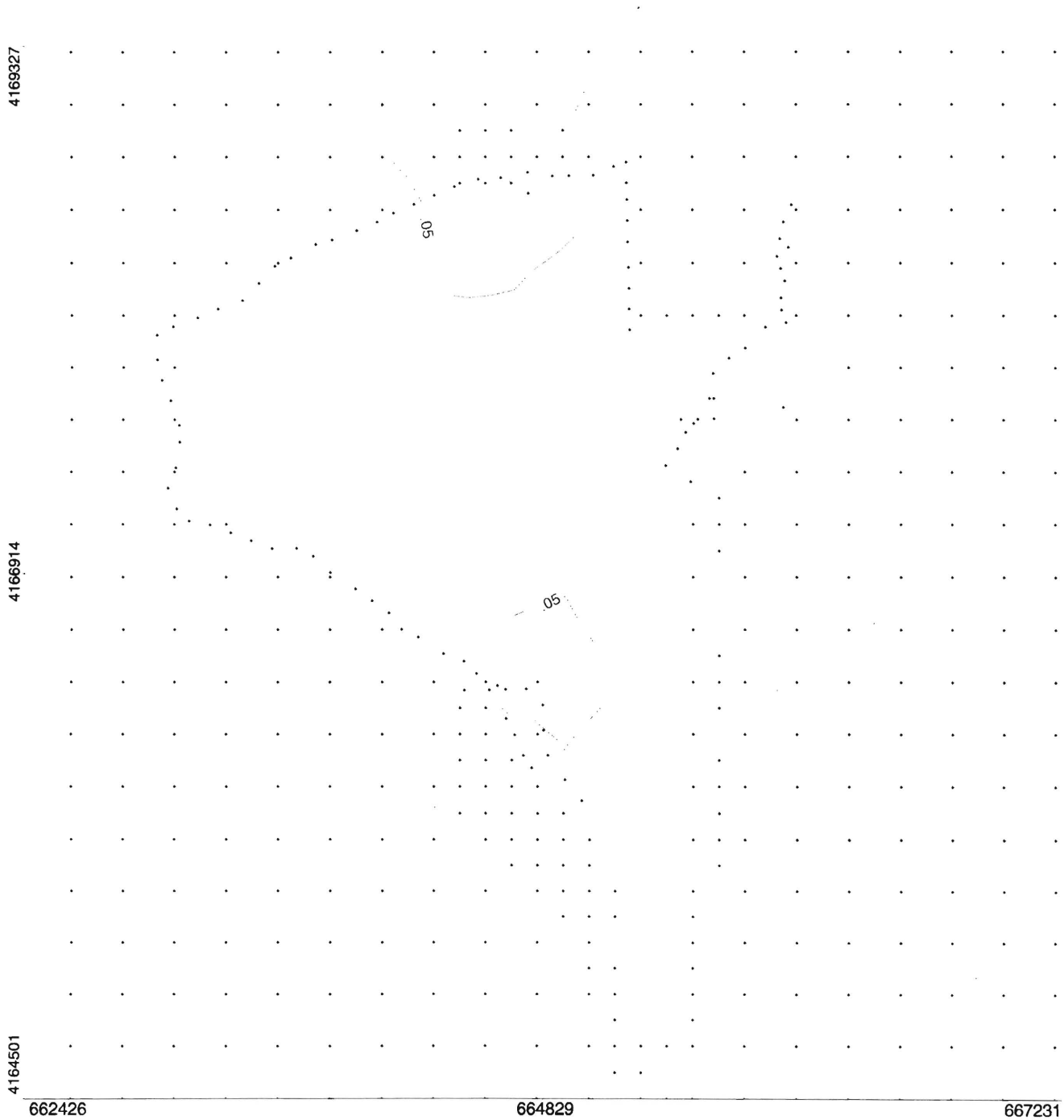

OUTPUT TYPE: **Concentration**	**NO. RECEPTORS : 517**	**DOE RUN BUICK**
MODELING OPTIONS: **CONC, RURAL, ELEV, DFAULT**		MODELER: **1990 4th QUARTER MODEL RESULTS**
		DATE: **1/10/2000**

ISC3 View - Ver 1.2 - Lakes Environmental Software

Project Name: **DOE RUN BUICK LEAD SIP MET DATA SET 1991 SHORT TERM 1 SGF MET**

POST/PLOT FILE OF PERIOD VALUES FOR SOURCE GROUP: ALL

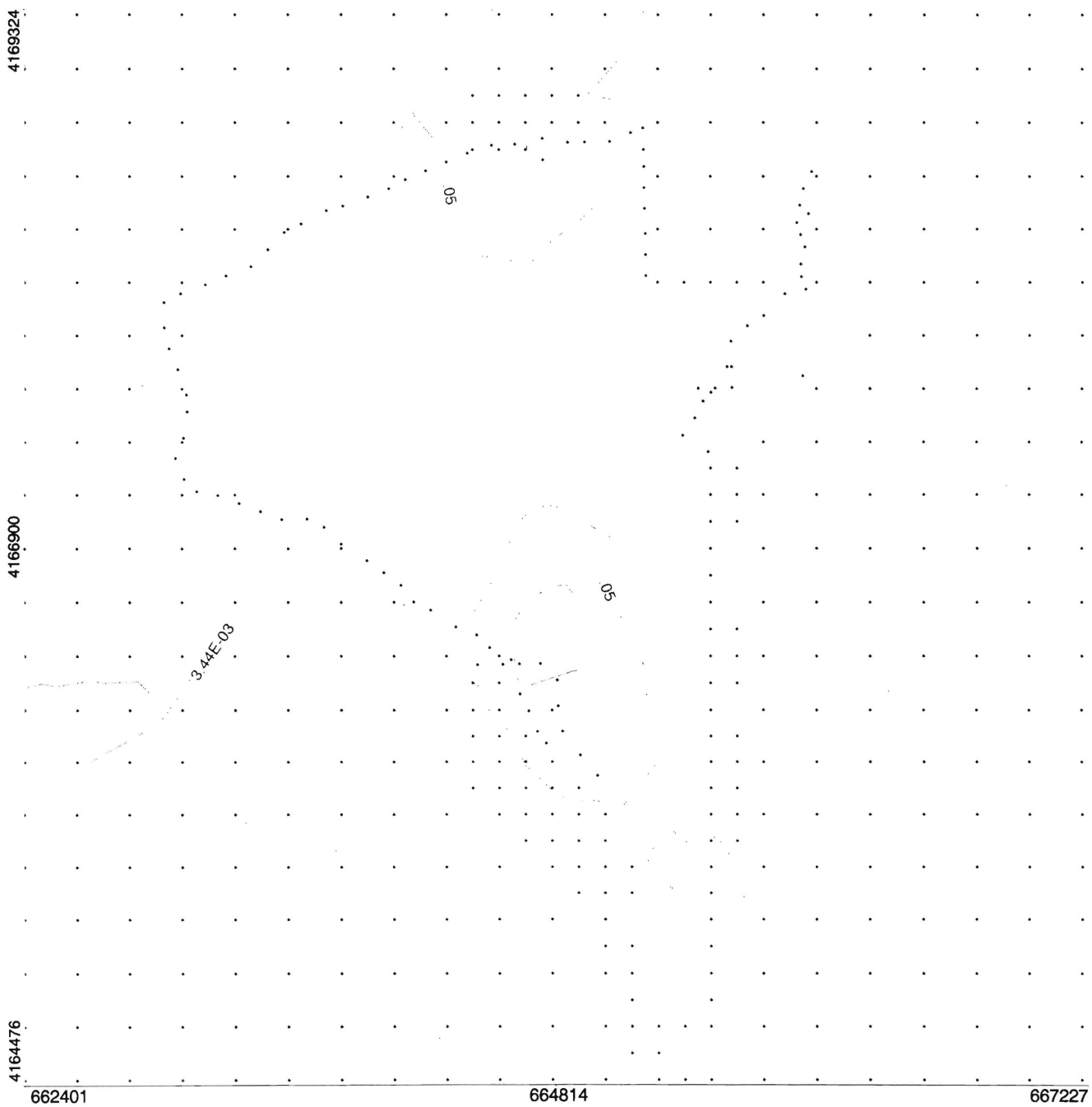

OUTPUT TYPE: **Concentration**	**NO. RECEPTORS : 524**	**DOE RUN BUICK**
MODELING OPTIONS: **CONC, RURAL, ELEV, DFAULT**	MODELER: **1991 1st QUARTER MODEL RESULTS**	
	DATE: **1/10/2000**	

ISC3 View - Ver 1.2 - Lakes Environmental Software

Project Name: **DOE RUN BUICK LEAD SIP MET DATA SET 1991 SHORT TERM 1 SGF MET**

POST/PLOT FILE OF PERIOD VALUES FOR SOURCE GROUP: ALL

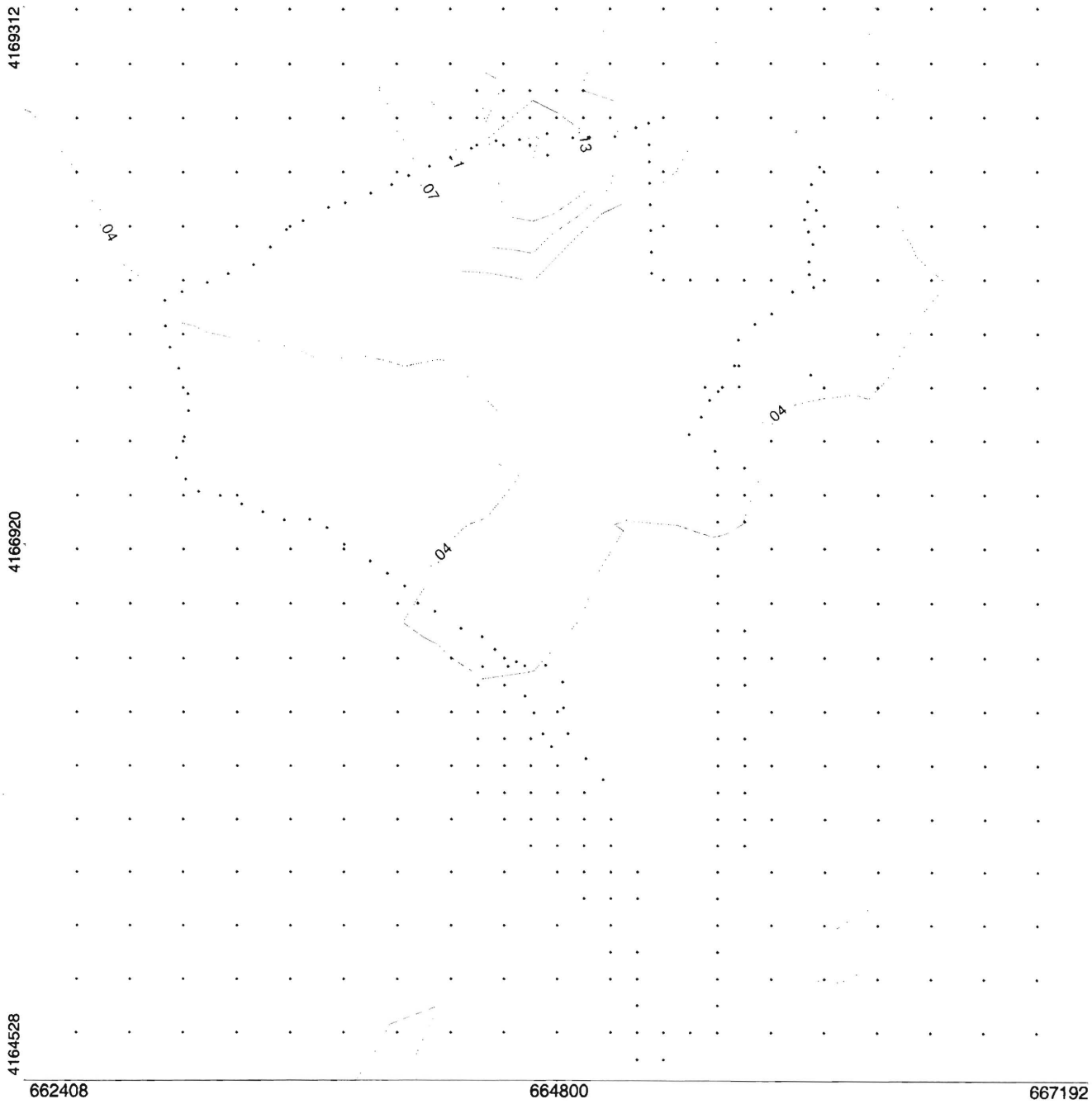

OUTPUT TYPE: **Concentration**	**NO. RECEPTORS : 524**	**DOE RUN BUICK**
MODELING OPTIONS: **CONC, RURAL, ELEV, DFAULT**	MODELER: **1991 2nd QUARTER MODEL RESULTS**	
	DATE: **1/10/2000**	

ISC3 View - Ver 1.2 - Lakes Environmental Software

Project Name: **DOE RUN BUICK LEAD SIP MET DATA SET 1991 SHORT TERM 1 SGF MET**

POST/PLOT FILE OF PERIOD VALUES FOR SOURCE GROUP: ALL

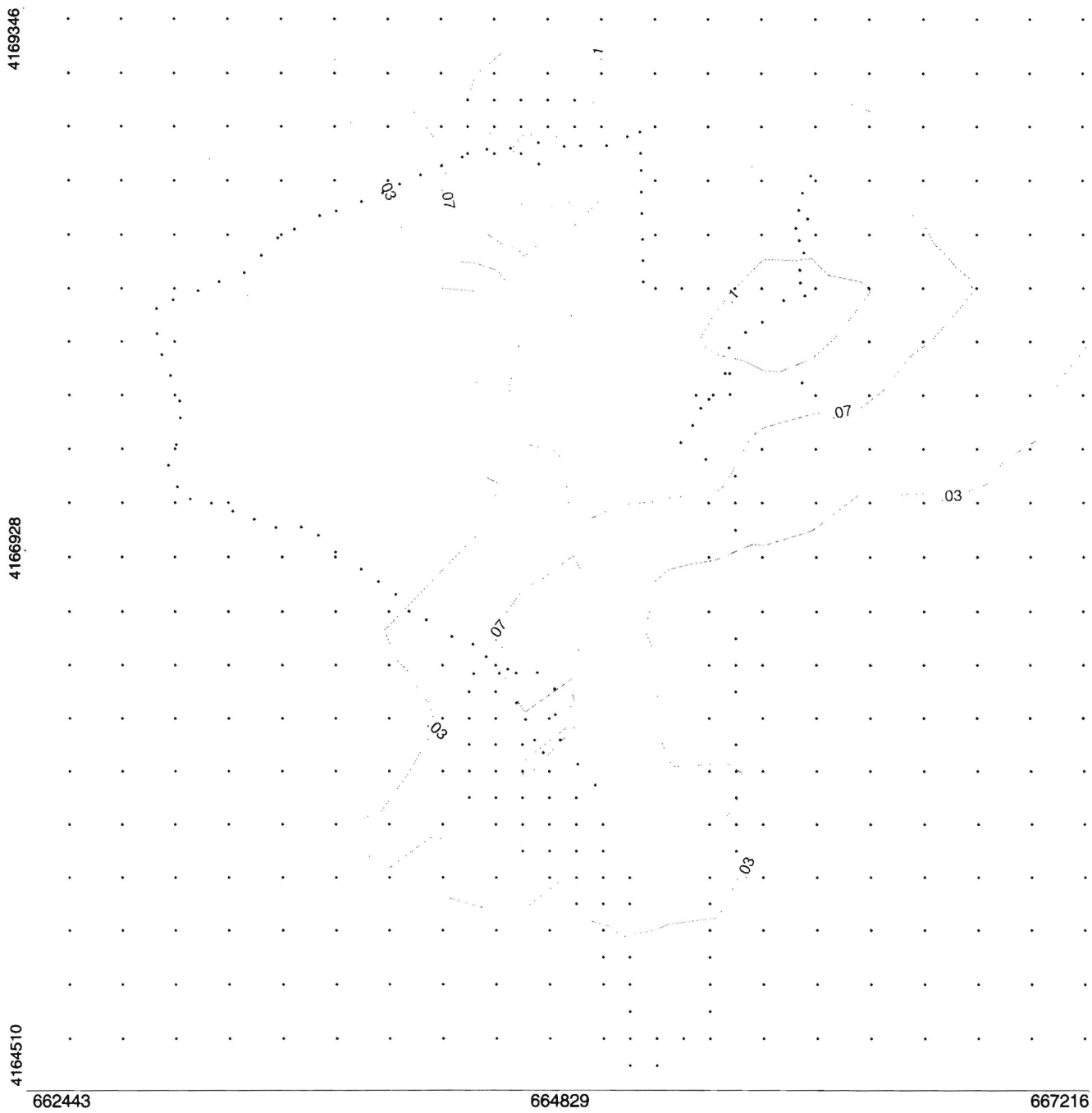

OUTPUT TYPE: **Concentration**	**NO. RECEPTORS : 516**	**DOE RUN BUICK**
MODELING OPTIONS: **CONC, RURAL, ELEV, DFAULT**	MODELER: **1991 3rd QUARTER MODEL RESULTS**	
	DATE: **1/10/2000**	

ISC3 View - Ver 1.2 - Lakes Environmental Software

Project Name: **DOE RUN BUICK LEAD SIP MET DATA SET 1991 SHORT TERM 1 SGF MET**

POST/PLOT FILE OF PERIOD VALUES FOR SOURCE GROUP: ALL

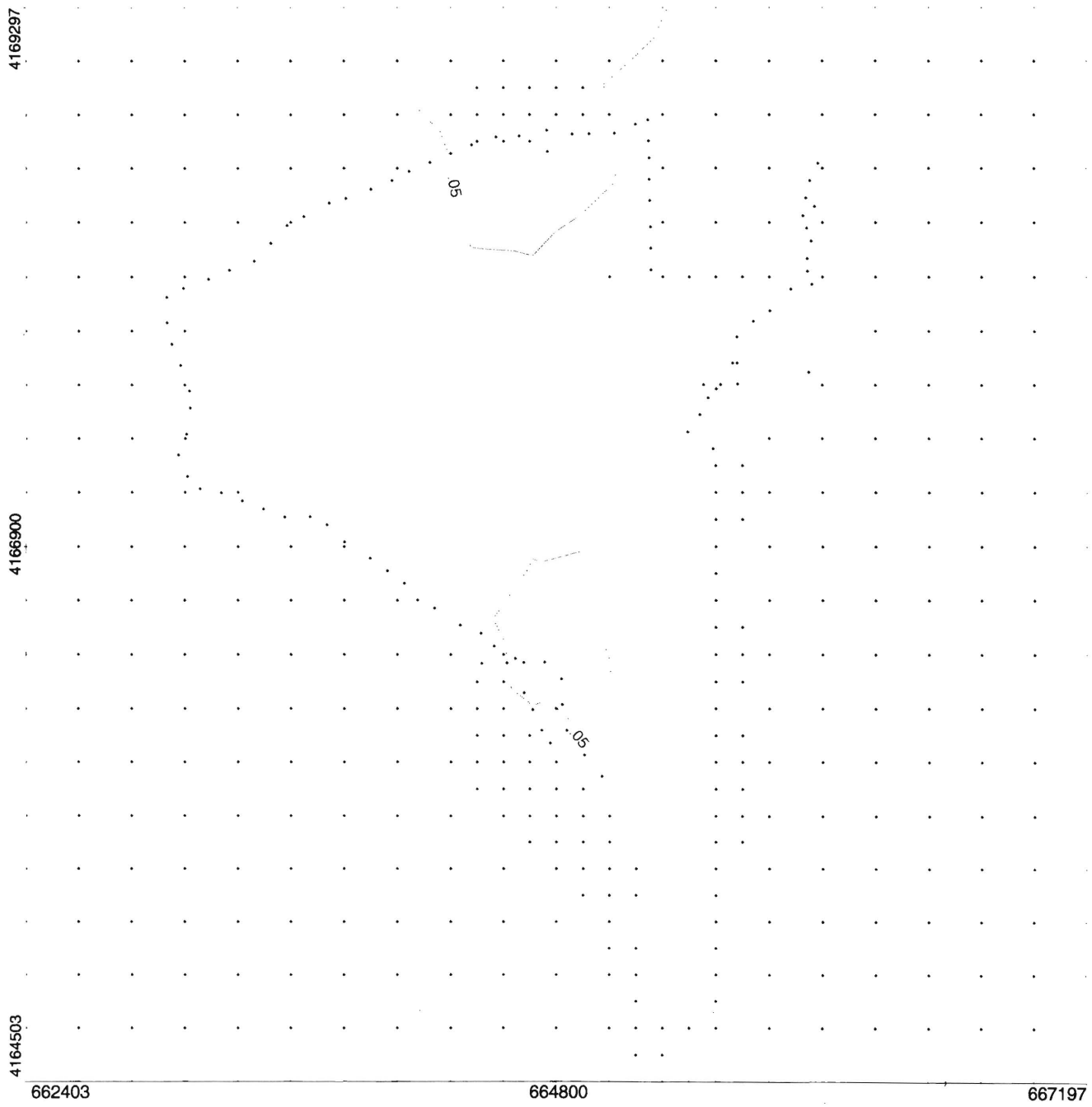

OUTPUT TYPE: **Concentration**	**NO. RECEPTORS : 525**	**DOE RUN BUICK**
MODELING OPTIONS: **CONC, RURAL, ELEV, DFAULT**	MODELER: **1991 4th QUARTER MODEL RESULTS**	
	DATE: **1/10/2000**	

ISC3 View - Ver 1.2 - Lakes Environmental Software