GUIDANCE MANUAL

FOR

SURFACE WATER SYSTEM

TREATMENT REQUIREMENTS

January 1992

MISSOURI DEPARTMENT OF NATURAL RESOURCES
Public Drinking Water Program

PUB416

TABLE OF CONTENTS

FOREWORD II

PART 1 - EPA's CONSENSUS METHOD FOR GIARDIA CYST ANALYSIS 1

PART 2 - TRACER STUDIES AND EVALUATIONS 4
2.0 GENERAL 4
2.1 METHODS OF TRACER STUDIES 4
2.2 TRACER SELECTION AND DOSAGES 4
2.3 FLOW CONDITIONS 5
2.4 TEST PROCEDURES 5
2.4.1 Step-dose Method 6
2.4.2 Slug-dose Method 7
2.5 "RULE OF THUMB" FRACTION 9
2.5.1 "Rule of Thumb" Fraction Table 10
2.5.2 Models for "Rule of Thumb Application 10

PART 3 - "CT" VALUES 17
3.0 TABLES FOR "CT" VALUES 17
3.1 CALCULATIONS FOR TOTAL INACTIVATION RATIO 30
3.1.1 For One Point of Disinfection 30
3.1.2 For More Than One Point of Disinfection 31
3.1.3 For One or More Points of Residual Disinfection Monitoring 31
3.2 CONVERSIONS 32
3.2.1 Log Removal to Percent Removal 32
3.2.2 Disinfection Requirements for Giardia Lamblia Cysts 32
3.2.3 Disinfection Requirements for Viruses 33

PART 4 - GROUND WATER UNDER DIRECT INFLUENCE OF SURFACE WATER 34
4.0 GENERAL 34
4.1 SOURCE EVALUATION PROTOCOL 34
4.2 STEPS IN DETERMINING DIRECT SURFACE WATER INFLUENCE ON GROUND WATER SOURCE 35
4.2.1 Step 1 - Record Review 35
4.2.2 Step 2 - Review of Well Sources 35
4.2.3 Step 3 - On Site Inspection 36
4.2.4 Step 4 - Particulate Analysis and Other Indicators 37
4.3 SEASONAL SOURCES 41

RECYCLED PAPER

F O R E W O R D

Regulations require all surface water systems and ground water systems under direct influence of surface waters must be provided with appropriate conventional filtration treatment process.

The conventional filtration treatment process for a surface water supply source consists of two stages of treatment in series followed by filtration and disinfection. Each treatment stage shall compose of a chemical rapid mix, flocculation and sedimentation. For a ground water source that is under the direct influence of surface water, the treatment shall consist of a series of treatment processes including rapid mix, flocculation and sedimentation followed by filtration and disinfection. Additional treatment may be required based on the quality and characteristics of the raw water source. Design parameters for the different treatment processes can be found in the Design Guide For Community Public Water Supplies dated January, 1988.

The main emphases for the surface water treatment requirements are turbidity removal and inactivation and/or removal of Giardia Lamblia cysts and viruses. The turbidity of the water entering the distribution system must be equal or less than 0.5 turbidity unit in at least ninety five percent (95%) of the measurements taken each month. No turbidity measurement must equal or exceed five (5) turbidity units.

Any surface water system or ground water system under direct influence of surface water providing the required treatment, and water systems practicing conventional filtration treatment on February 6, 1992, and meeting the above turbidity requirements, will be credited with 99.68 percent (2.5 log) and 99.0 percent (2.0 log) inactivation and/or removal of Giardia Lamblia cysts and viruses respectively, excluding the inactivation and/or removal by the disinfection process. The disinfection process must provide a sufficient "CT" (disinfection's residual concentration multiplied by the adjusted contact time) value to ensure that the total treatment process achieves the required 99.9 percent (3.0 log) inactivation and/or removal of Giardia Lamblia cysts, and 99.99 percent (4.0 log) inactivation and/or removal of viruses. The disinfection contact time is adjusted by conducting Tracer Studies or by multiplying the theoretical contact time by the "Rule of Thumb" fraction as explained in this manual.

This manual includes the criteria in determining if a ground water is under the direct influence of surface water, the EPA Consensus Method for Giardia cysts analysis, procedures in conducting tracer studies, and tables on "CT" values that were abstracted from the federal surface water treatment rule guidance manual.

PART-1

EPA CONSENSUS METHOD FOR GIARDIA CYST ANALYSIS

TESTING FOR GIARDIA IN WATER

To begin the workgroups on testing, Jay Basconcelos gave a slide presentation about the testing method used in the Region 10 Laboratory. The following pages and Appendix C summarize his talk.

METHODS OF TESTING FOR GIARDIA IN WATER

(George (Jay) Vasconcelos, Regional Microbiologist, Region 10 Laboratory, Manchester, Washington)

Background:

Although recent development of an excystation technique by Drs. Bingham, Meyer, Rice and Schaefer could in future lead to developing cultural methods, at this time no reliable methods exist for culturing Giardia cysts from water samples. At present, the only practical method for determining the presence of cysts in water is by direct microscopic examination of sample concentrates.

Microscopic detection in water-sample concentrates isn't an ideal process. Finding and identifying the cysts relies almost entirely on the training, skill, experience and persistence of the examiner. (And it is a skill not widespread among water-supply laboratories.) But despite its limitations, microscopic identification is currently the best method we have.

Years ago, the basic assumption was made that in order to find Giardia cysts in water, some form of sample concentration was necessary. As early as 1956, labs were using membrane filters with a porosity of 0.45 µm. With few exceptions, these attempts were unsuccessful. The center for Disease Control has tried particulate filtration, with diatomaceous earth as the medium. This removed the cysts from the water, but the cysts couldn't be separated from the particles of diatomaceous earth.

With the recent increase in the incidence of waterborne giardiasis, further efforts have been made to improve the detection method. An ideal method would be one that recovers all cysts in a water sample rapidly, cheaply and simply; allows rapid detection, identification and quantification; and provides information on the viability of and/or infectivity potential of cysts detected.

Unfortunately, no such method exists. The methods presently available can be broadly separated into two general stages: primary concentration and processing (see Table 1 on next page), and detection and identification (see Table 2 on next page).

TABLE 1: PRIMARY CONCENTRATION AND PROCESSING METHODS

	METHOD	INVESTIGATOR (S)	RESULTS
1.	Membrane Filtration		
	Cellulosic (47mm-0.45um)	Chang & Kabler USPHS, 1956	Generally unsuccessful
	Polycarbinate (293mm-5um)	Pyper, DuPrain & Henry Eng 1982, (unpublished)	Passing 1 gal/min @ 10 PSI. 15-1800 gal total.
2.	Particulate Filtration (diatomaceous earth, sand, etc.)	Shaw et al, 1977 Juranek, 1979	Generally good removal but poor eluation
3.	Algae (foerst) Centrifuge	Holman et al, 1983 DHHS, Washington	Good rapid recovery, but limited in field use.
4.	Anionic and Cationic Exchange Resins	Brewer, Wright State UN. (unpublished)	Generally unsuccessful
5.	Epoxy-Fiberglass Balston Tube Filters (10"-8um)	Riggs, CDHS Lab, Berkley, CA (unpublished)	Overall recovery 20-80%
6.	Microporous Yarnwoven Dept. Filters (7 & 1um orlon & polyprolylene)	Jakubowski, Erickson, 1979 & 1989, EPA-Cincinnati	Recovery 3-25% Extration ave. 58%
7.	Pellican Cassette System	Millipore Corp. (unpublished)	May be useful for processing filter washings
8.	Filterwashing Appartus	DuWalle, U. of Wash., 1982 (unpublished)	Claims 75% recovery from orlon filters

TABLE 2: DETECTION METHODS

	METHOD	INVESTIGATOR (S)	RESULTS
1.	Immunofluorescen		
	DFA	Riggs, CSDHS Lab, Berkley, CA 1983	Good prep., Cross Rx
	IFA	Sauch, EPA-Cincinnati Riggs, CSDS	Still under study
	Monoclonal Antibodies	Riggs, CSDHS Sauch, EPA-Cincinnati (unpublished)	Still under study
2.	ELSIA Method	Hungar, J. Hoplins MD, 1983	Feces samples only
3.	Brightfield/Phase Contrast	EPA Consensus Method	Ongoing

In September, 1980, the EPA convened a workshop on Giardia methodology in Cincinnati. Its main purpose was to identify the best available methodology, and to agree on a reference method. The five labs in attendance recognized that any proposed method would be based in large part on opinions and personal preferences rather than on hard data, but that agreeing on a consensus method would promote uniformity and provide a basis for future comparisons. Our lab has modified the EPA consensus method slightly for our use. This method is outlined below.

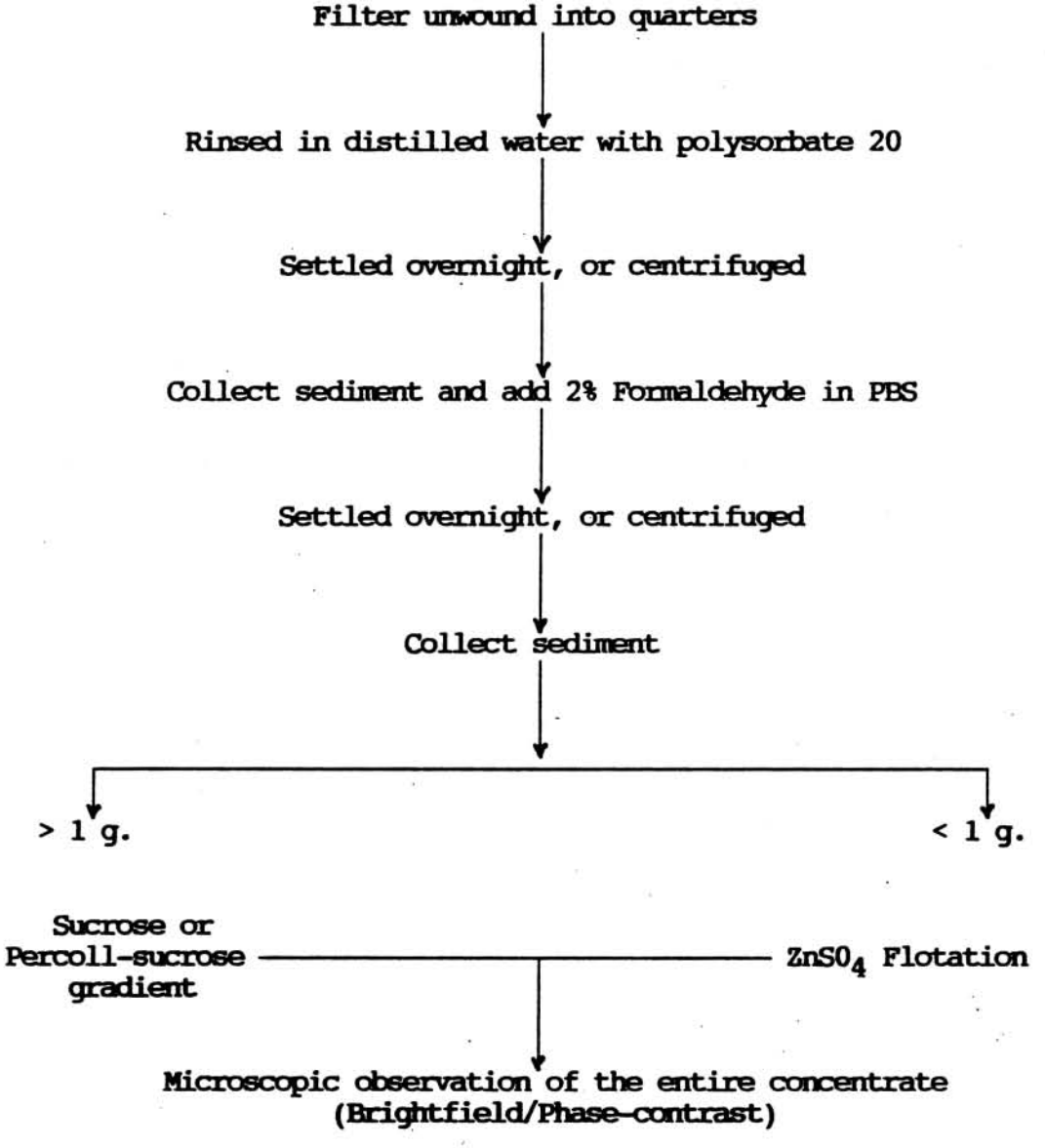

Part-2

TRACER STUDY AND EVALUATIONS

2.0 GENERAL

Evaluations must be conducted in surface water supply systems and ground water supply systems that are under the direct influence of surface water as a basis for determining the "CT" values and degree of Giardia Lamblia cysts and viruses inactivation and/or removal.

2.1 METHODS OF TRACER STUDIES

A. Step-dose method — Application of a tracer chemical at a constant dosage until concentration at the desired end point reaches a steady - state level.

B. Slug-dose method — A large instantaneous dose of tracer chemical is added to the incoming water and samples are taken at the exit of the unit over time as the tracer passes through the unit. Require intensive mixing to minimize potential density - current effects and to obtain uniform distribution of the instantaneous tracer dose across the basin.

2.2 TRACER SELECTION AND DOSAGES

A. Chloride - Applied at 10 to 20 mg/L

B. Fluoride - very convenient tracer chemical for clear-well. For clarifiers, allowances should be made for fluoride that will be absorbed on flocs and settles out. When using fluoride the following should be taken into consideration:

1. Applied at 1 to 2 mg./L

2. Recommended in cases where fluoride feed equipment is already in place.

3. Fluoride is difficult to detect at low levels.

4. Secondary and primary maximum contaminant levels for fluoride are 2 and 4 mg/L respectively.

C. Rhodamine WT - can be used as fluorescent tracer in water flow studies in accordance with the following:

1. Raw water concentration should be limited to a maximum of 10 mg/L.

2. Drinking water concentration should not exceed 0.1 microgram per liter (ug/L).

3. Studies which result in human exposure to the dye must be brief and infrequent.

4. Concentration as low as 2 ug/L can be used in tracer studies because of the detection level in the range of 0.1 to 0.2 ug/L.

2.3 FLOW CONDITIONS

Ideally, tracer studies should be performed for at least four (4) flow rates for the section being tested.

A. one <u>near average</u> flow,

B. two <u>greater than average</u> flow, and

C. one <u>less than average</u> flow

If four (4) flow rates studies are not practical to conduct due to site specific restrictions and limited resources:

A. conduct a minimum of one tracer test for each disinfectant section at a flow rate of not less than 91 percent of the highest flow rate experienced at that section.

B The detention time from one tracer test may be used to provide a conservative estimate in the "CT" calculations for that section.

2.4 TEST PROCEDURES

Background concentration of tracer chemical is determined at the selected sampling point and at the point of tracer application before the beginning of the test. If a background tracer concentration is detected, continue to monitor at the selected sampling point until a constant concentration at or below the raw water background level is achieved. This measured concentration is the baseline tracer concentration. If tracer chemical is normally used for treatment, discontinue its application to the water in sufficient time to permit the tracer concentration to recede to background level.

Data from the tracer studies should be summarized in tables of time and residual concentration. These data are then analyzed to determine the detention time, T_{10}, to be used in calculating "CT". Tracer test data from either of the methods can be evaluated graphically, numerically, or by combination of these techniques.

2.4.1 Step - dose Method

2.4.1.1 Recommended Tracer Dosages

a. Chloride - 20 mg/L where background chloride level is less than 10 mg/L.

b. Fluoride - As low as 1.0 to 1.5 mg/L when raw water fluoride level is not significant.

2.4.1.2 Procedure

a. At t = 0	Apply tracer chemical at constant rate for the duration of the test.
b. At every 2 to 5 minutes interval	Monitor tracer residual at the sampling points until a residual concentration is first observed. Continue to monitor the residual concentration with respect to time until the residual concentration reaches a steady-state value.

Notes:

Less frequent residual monitoring may be performed until a change in residual concentration is first detected.

A reasonable time interval for sampling should be chosen based on overall detention time of the unit being tested

If verification of test is desired, discontinue the tracer feed and and monitor the receding tracer concentration at the same frequency, until the concentration corresponds to the background level.

As a guideline, 10 minutes interval may be used for the first 30 minutes if the theoretical detention time of the section being tested is greater than 4 hours.

2.4.1.3. Tracer Test Data Evaluation

a. Graphical Method - Plot a graph of dimensionless concentration C/Co (where C-is the tracer concentration at the point of sampling and Co-is the concentration dosage applied) versus time and reading the value for T_{10} directly from the graph at the appropriate dimensionless concentration.

b. Numerical Method - Develop a semi-logarithmic plot of the dimensionless data $\log_{10}(1-C/Co)$ versus t/T (elapsed time divided by the theoretical detention time of the section being tested). Draw a straight line through the data points (scattered data points are discredited by drawing a smooth straight line). The resulting equation of the line is used to calculate the T_{10} value.

<u>Equation 1</u>

$$\log_{10}(1-C/Co) = m(t/T) + b$$

Where: m - slope of the line
b - intercept

Since the plot will not include the times when the tracer concentration is not above the baseline level, Equation 1 can be rearranged by substituting T_{10} for "t".

<u>Equation 2</u>

$$\log_{10}(1-C/Co) = m(T_{10}/T) + b$$

Solving for T_{10}

<u>Equation 3</u>

$$T_{10} = T[\log_{10}(1-C/Co) - b]/m$$

2.4.2 Slug - dose Method

2.4.2.1 Recommended Dosages and application of tracer chemicals

As a guideline, the theoretical concentration should be comparable to the constant dose applied in step-dose tracer test. i.e. 10 to 20 mg/L for chloride, 1 to 2 mg/L for fluoride, and maximum of 10 mg/L of rhodamine.

a. The application should be instantaneous and provide uniformly mixed distribution of the chemical.

b. Tracer addition is considered instantaneous if the dosing time does not exceed 2 percent of the basin's theoretical detention time.

c. One recommended procedure for achieving instantaneous application is to apply the tracer chemical by gravity through a funnel and a hose apparatus.

d. The mass tracer chemical is calculated by multiplying the theoretical concentration by the total volume of the section to be tested.

e. The quantity of tracer chemical is diluted to apply instantaneous dose and minimize density effects.

2.4.2.2 Procedure

a.	At t = 0	Large instantaneous dose of tracer chemical is added to the influent of the section.
b.	At every 2 to 5 minutes interval	Monitor the tracer concentration residual at the point of sampling. Continue to monitor the residual concentration until it reaches the peak and then drops back to the original baseline level.

2.4.2.3. Tracer Test Data Evaluation

a. Subtract the baseline tracer level from the measured tracer concentration at each sampling interval.

b. Compute the dimensionless C/Co (C-the resulting residual concentration in "a." divided by the theoretical concentration Co).

c. Plot the dimensionless concentration C/Co as a function of time.

d. Calculate the total area under the slug-dose curve graphically (using a planimeter) or numerically (multiplying the time elapsed by the residual concentration in "a.").

Graphical method - using a planimeter, determine the area under the curve.

Numerical method - sum of the calculated incremental areas (residual concentration in "a." at the end of each interval multiplied by the time duration of the interval).

The area under the slug-dose data curve represents the total mass of the tracer that was detected during the tracer test divided by the average flow rate through the section being tested.

e. Calculate the cummulative area for each interval.

f. Divide the cummulative area at each interval by the total area under the slug-dose data curve. The resulting quotient will be equivalent to the dimensionless C/Co in the step-dose tracer test method.

g. Plot the above C/Co as a function of time by drawing a smooth curve connecting the points. The tracer contact time T_{10} can be determined similar to the graphical method in the step-dose tracer test data evaluation

2.5 "RULE OF THUMB" FRACTION

In a situation where conducting tracer studies is impractical and/or prohibitively expensive, the "Rule of Thumb" fractions representing ratio of T_{10} to T may be used for calculating the "CT" values. This method for finding T_{10} involves multiplying the theoretical detention time in the basin by the "Rule of Thumb" fraction T_{10}/T that is representative of the particular basin configuration and baffling for which T_{10} is desired. The following table provides a rough estimate of T_{10} and are recommended only on a limited basis. Conditions which are combinations of variations of the following examples may exist and warrant the use of intermediate T_{10} values such as 0.2, 0.4, Or 0.6.

2.5.1 "Rule of Thumb" Fraction Table

BAFFLING CONDITION	"RULE OF THUMB" FRACTION T_{10}/T	BAFFLING DESCRIPTION
Unbaffled (mixed flow)	0.1	None, agitated basin, very low length to width ratio, high inlet and outlet flow velocities
Poor	0.3	Single or multiple unbaffled inlets and outlets, no intra-basin baffles
Average	0.5	Baffled inlet or outlet with some intra-basin baffles
Superior (plug flow)	0.7	Perforated inlet baffle, serpentine or perforated intra- basin baffles, outlet weir or perforated launders
Perfect	1.0	Very high length to width ratio (pipeline flow), perforated inlet, outlet, and intra-basin baffles

2.5.2 "Rule of Thumb" Fraction Models

The following pages show models of the various configurations and baffling of basins.

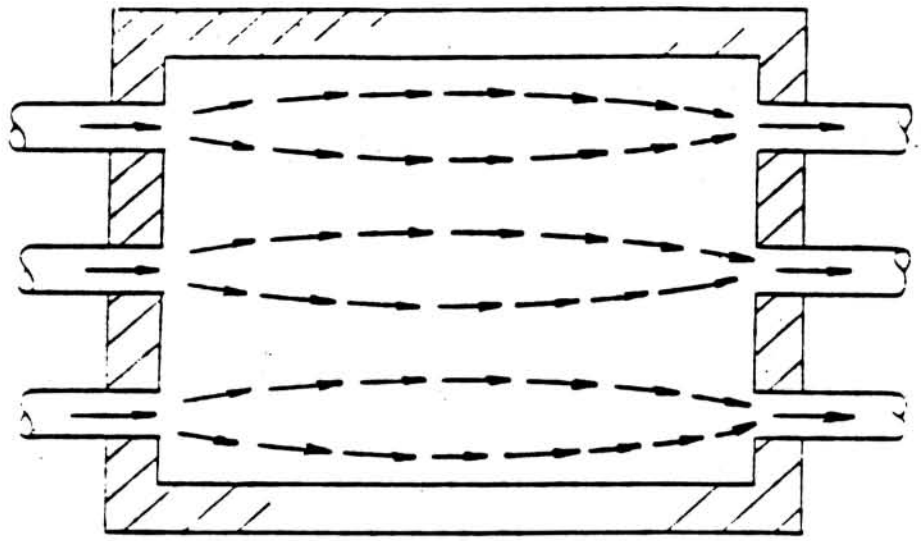

PLAN

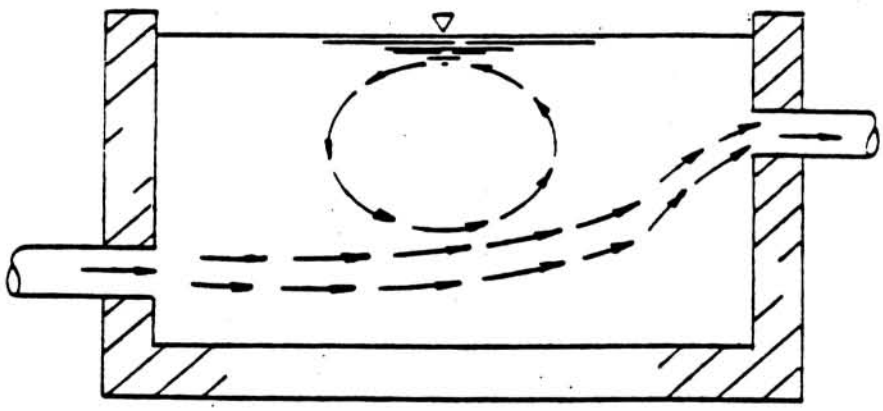

SECTION

FIGURE - 1 POOR BAFFLING CONDITIONS -- RECTANGULAR CONTACT BASIN

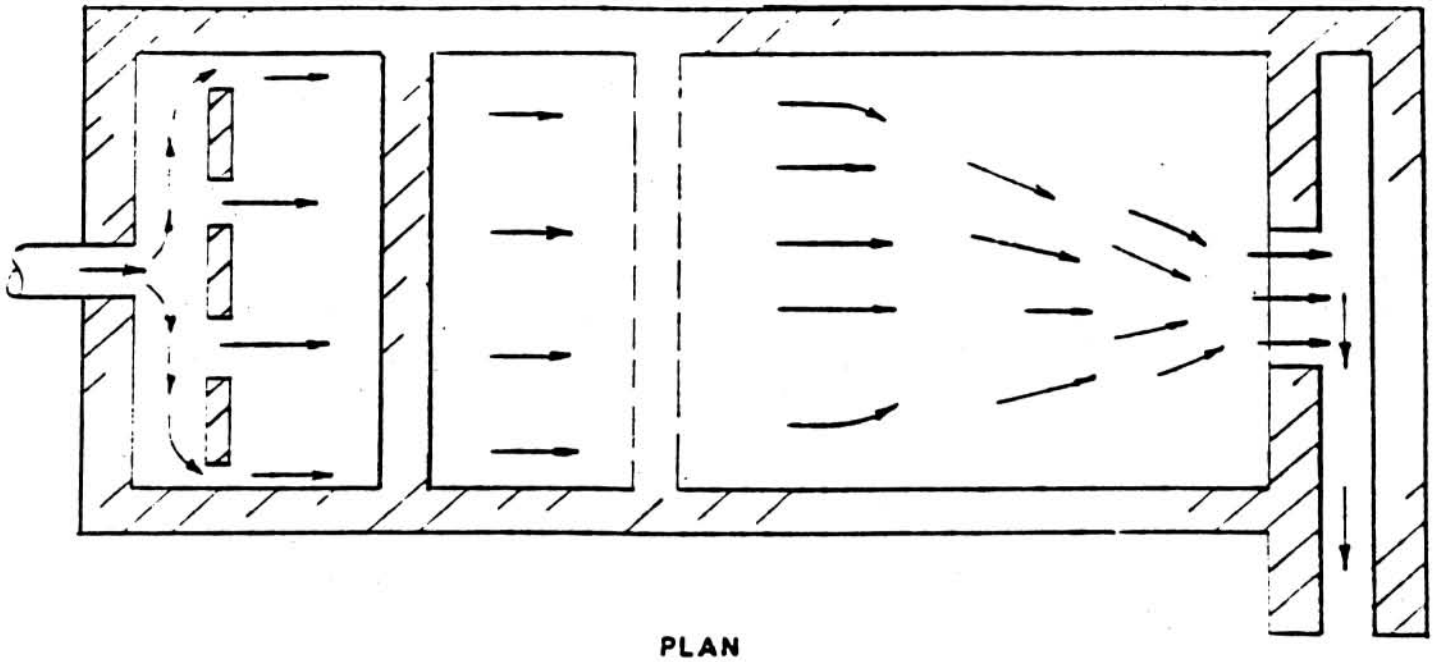

PLAN

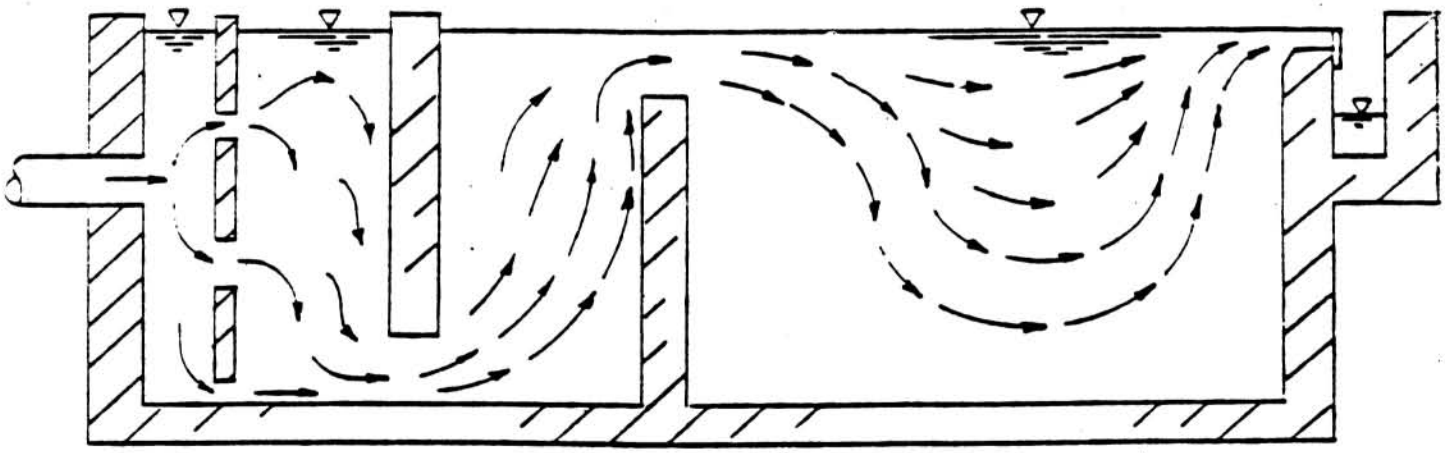

SECTION

FIGURE - 2 AVERAGE BAFFLING CONDITIONS -- RECTANGULAR CONTACT BASIN

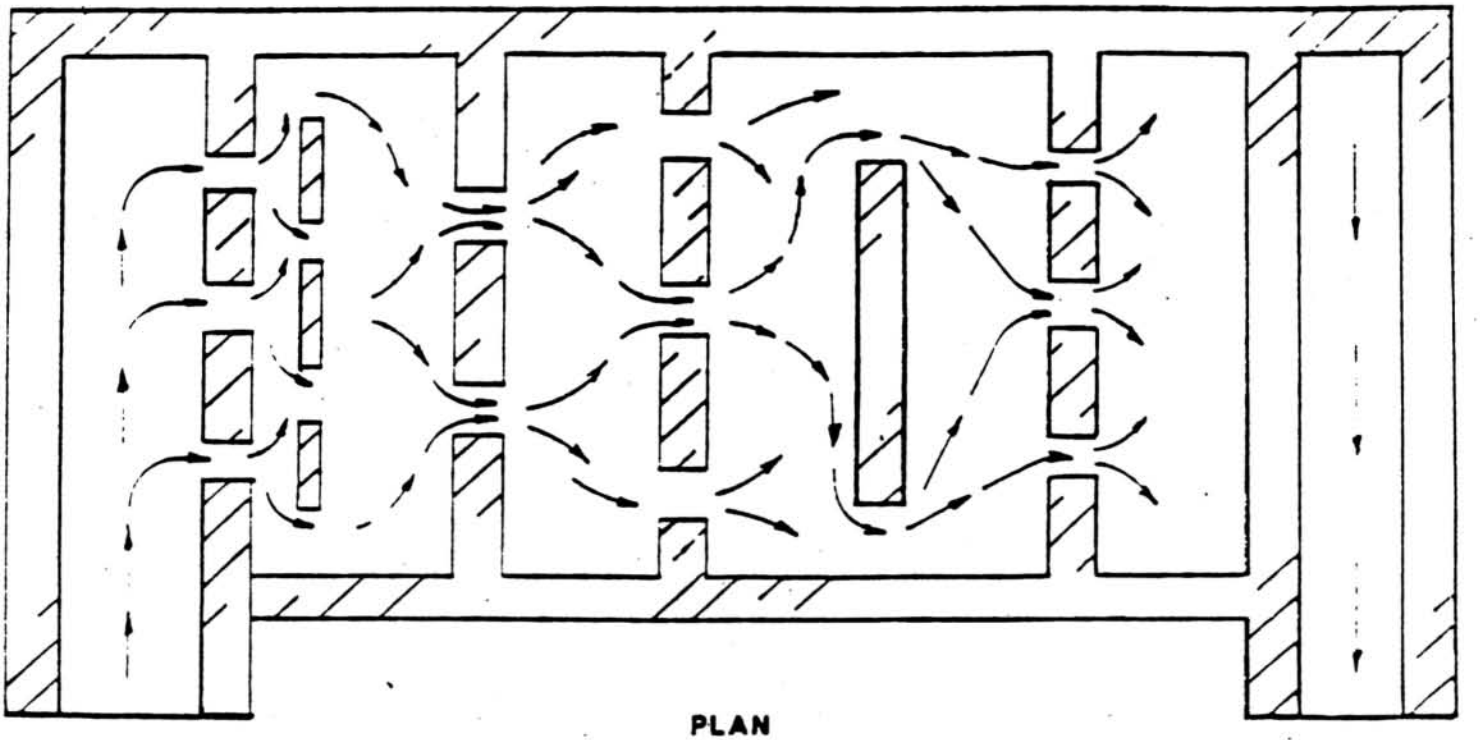

PLAN

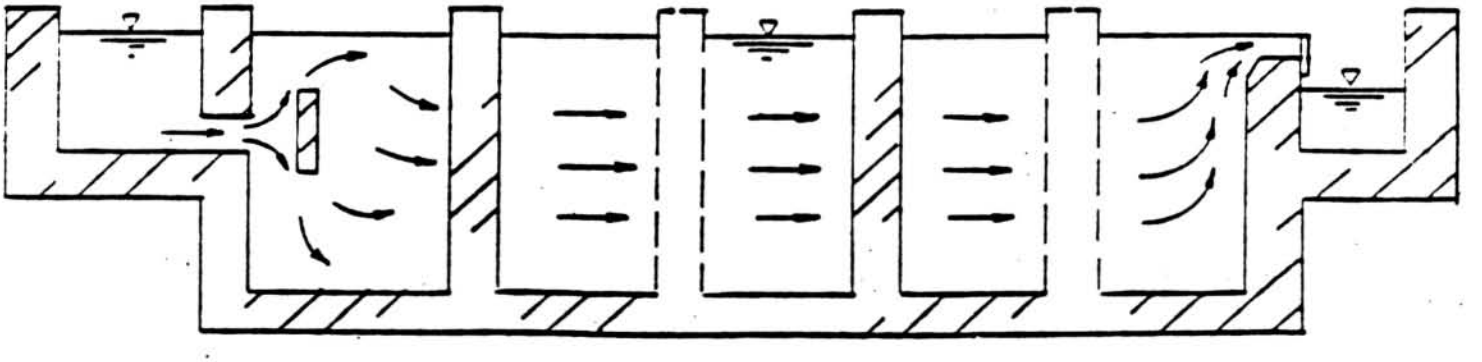

SECTION

FIGURE - 3 SUPERIOR BAFFLING CONDITIONS -- RECTANGULAR CONTACT BASIN

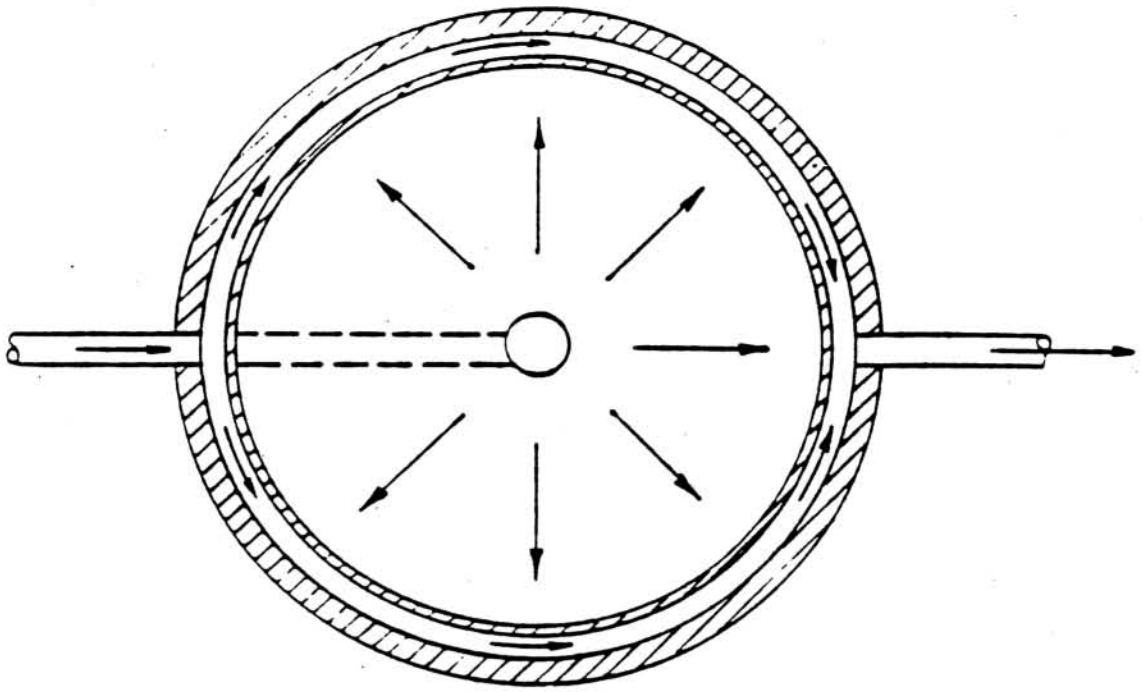

PLAN

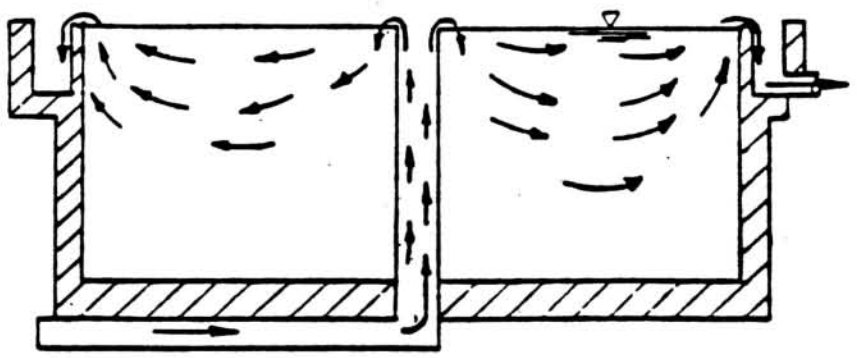

SECTION

FIGURE -4 POOR BAFFLING CONDITIONS -- CIRCULAR CONTACT BASIN

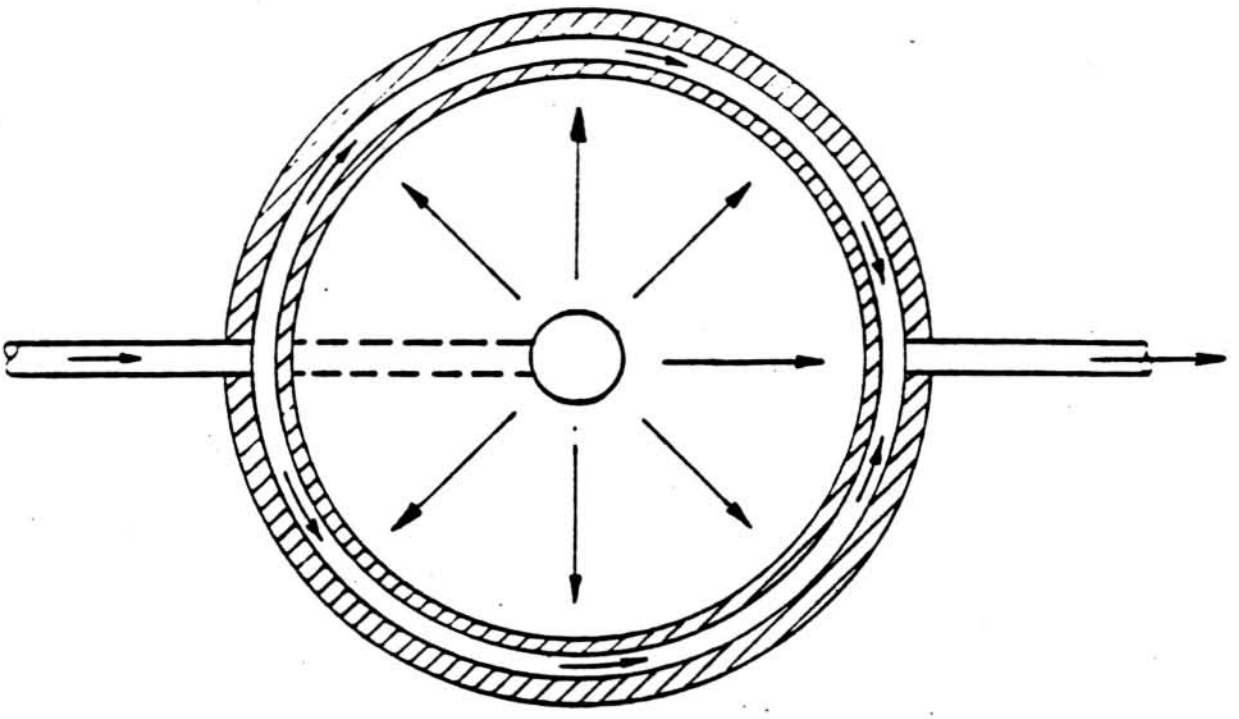

PLAN

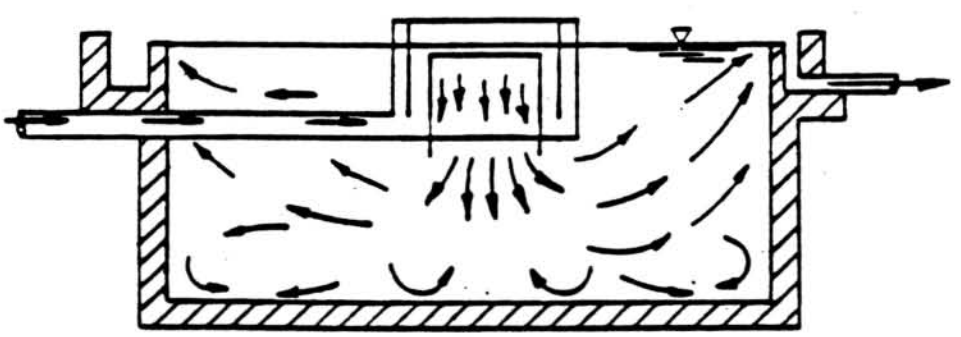

SECTION

FIGURE - 5 AVERAGE BAFFLING CONDITIONS - -
CIRCULAR CONTACT BASIN

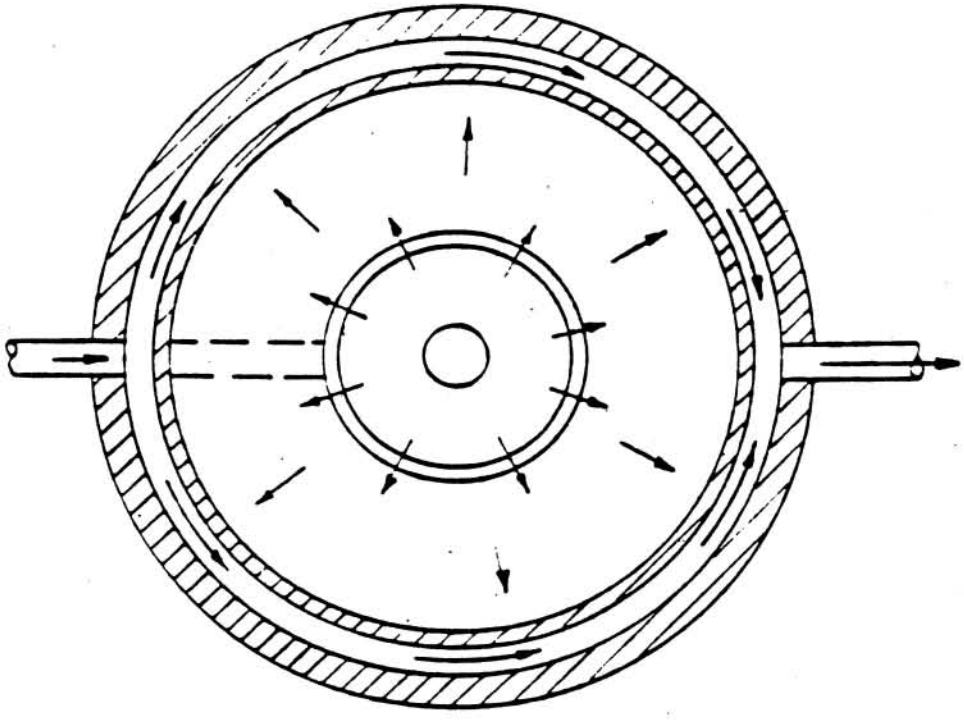

PLAN

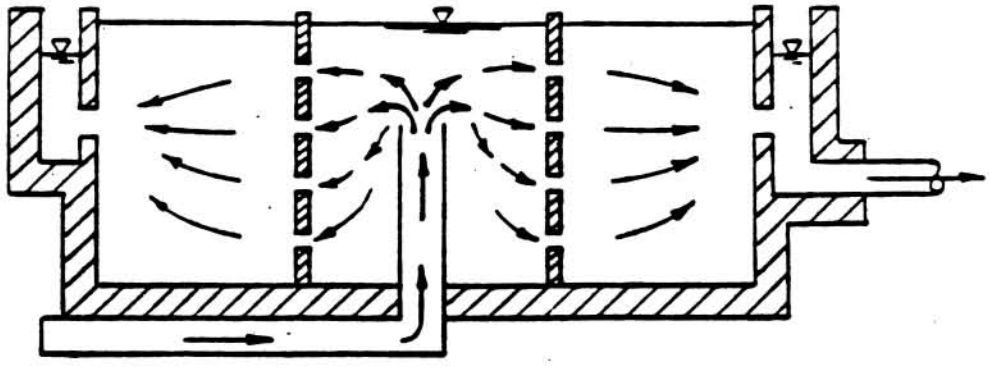

SECTION

FIGURE - 6 SUPERIOR BAFFLING CONDITIONS - - CIRCULAR CONTACT BASIN

3.0 TABLES FOR CT VALUES

The total inactivation ratio must be determined based on $CT_{99.99}$ values in the following tables.

TABLE-1
CT VALUES ($CT_{99.9}$) FOR 99.9 PERCENT INACTIVATION OF GIARDIA LAMBLIA CYSTS BY FREE CHLORINE AT 0.5°C OR LOWER[1]

Residual (mg/l)	pH						
	≦6.0	6.5	7.0	7.5	8.0	8.5	9.0
≦0.4	137	163	195	237	277	326	390
0.6	141	168	200	239	286	342	407
0.8	145	172	205	246	295	354	422
1.0	148	176	210	253	304	365	437
1.2	152	180	215	259	313	376	451
1.4	155	184	221	266	321	387	464
1.6	157	189	226	273	329	397	477
1.8	162	193	231	279	338	407	489
2.0	165	197	236	286	346	417	500
2.2	169	201	242	297	353	426	511
2.4	172	205	247	298	361	435	522
2.6	175	209	252	304	368	444	533
2.8	178	213	257	310	375	452	543
3.0	181	217	261	316	382	460	552

TABLE-2
CT VALUES ($CT_{99.9}$) FOR 99.9 PERCENT INACTIVATION OF GIARDIA LAMBLIA CYSTS BY FREE CHLORINE AT 5.0°C[1]

Free Residual (mg/l)	pH						
	≦6.0	6.5	7.0	7.5	8.0	8.5	9.0
≦0.4	97	117	139	166	198	236	279
0.6	100	120	143	171	204	244	291
0.8	103	122	146	175	210	252	301
1.0	105	125	149	179	216	260	312
1.2	107	127	152	183	221	267	320
1.4	109	130	155	187	227	274	329
1.6	111	132	158	192	232	281	337
1.8	114	135	162	196	238	287	345
2.0	116	138	165	200	243	294	353
2.2	118	140	169	204	248	300	361
2.4	120	143	172	209	253	306	368
2.6	122	146	175	213	258	312	375
2.8	124	148	178	217	263	318	382
3.0	126	151	182	221	268	324	389

[1]These CT values achieve greater than a 99.99 percent inactivation of viruses. CT values between the indicated pH values may be determined by linear interpolation. CT values between the indicated temperatures of different tables may be determined by linear interpolation. If no interpolation is used, use the $CT_{99.9}$ value at the lower temperature and at the higher pH.

TABLE-3

CT VALUES ($CT_{99.9}$) FOR 99.9 PERCENT INACTIVATION OF GIARDIA LAMBLIA CYSTS BY FREE CHLORINE AT 10.0°C[1]

Free Residual (mg/l)	pH						
	≦6.0	6.5	7.0	7.5	8.0	8.5	9.0
≦0.4	73	88	104	125	149	177	209
0.6	75	90	107	128	153	183	218
0.8	78	92	110	131	158	189	226
1.0	79	94	112	134	162	195	234
1.2	80	95	114	137	166	200	240
1.4	82	98	116	140	170	206	247
1.6	83	99	119	144	174	211	253
1.8	86	101	122	147	179	215	259
2.0	87	104	124	150	182	221	265
2.2	89	105	127	153	186	225	271
2.4	90	107	129	157	190	230	276
2.6	92	110	131	160	194	234	281
2.8	93	111	134	163	197	239	287
3.0	95	113	137	166	201	243	292

TABLE-4

CT VALUES ($CT_{99.9}$) FOR 99.9 PERCENT INACTIVATION OF GIARDIA LAMBLIA CYSTS BY FREE CHLORINE AT 15.0°C[1]

Free Residual (mg/l)	pH						
	≦6.0	6.5	7.0	7.5	8.0	8.5	9.0
≦0.4	49	59	70	83	99	118	140
0.6	50	60	72	86	102	122	146
0.8	52	61	73	88	105	126	151
1.0	53	63	75	90	108	130	156
1.2	54	64	76	92	111	134	160
1.4	55	65	78	94	114	137	165
1.6	56	66	79	96	116	141	169
1.8	57	68	81	98	119	144	173
2.0	58	69	83	100	122	147	177
2.2	59	70	85	102	124	150	181
2.4	60	72	86	105	127	153	184
2.6	61	73	88	107	129	156	188
2.8	62	74	89	109	132	159	191
3.0	63	76	91	111	134	162	195

[1]These CT values achieve greater than a 99.99 percent inactivation of viruses. CT values between the indicated pH values may be determined by linear interpolation. CT values between the indicated temperatures of different tables may be determined by linear interpolation. If no interpolation is used, use the $CT_{99.9}$ value at the lower temperature and at the higher pH.

TABLE-5

CT VALUES ($CT_{99.9}$) FOR 99.9 PERCENT INACTIVATION OF GIARDIA LAMBLIA CYSTS BY FREE CHLORINE AT 20.0°C[1]

Free Residual (mg/l)	pH						
	≦6.0	6.5	7.0	7.5	8.0	8.5	9.0
≦0.4	36	44	52	62	74	89	105
0.6	38	45	54	64	77	92	109
0.8	39	46	55	66	79	95	113
1.0	39	47	56	67	81	98	117
1.2	40	48	57	69	83	100	120
1.4	41	49	58	70	85	103	123
1.6	42	50	59	72	87	105	126
1.8	43	51	61	74	89	108	129
2.0	44	52	62	75	91	110	132
2.2	44	53	63	77	93	113	135
2.4	45	54	65	78	95	115	138
2.6	46	55	66	80	97	117	141
2.8	47	56	67	81	99	119	143
3.0	47	57	68	83	101	122	146

TABLE-6

CT VALUES ($CT_{99.9}$) FOR 99.9 PERCENT INACTIVATION OF GIARDIA LAMBLIA CYSTS BY FREE CHLORINE AT 25.0°C OR HIGHER[1]

Free Residual (mg/l)	pH						
	≦6.0	6.5	7.0	7.5	8.0	8.5	9.0
≦0.4	24	29	35	42	50	59	70
0.6	25	30	36	43	51	61	73
0.8	26	31	37	44	53	63	75
1.0	26	31	37	45	54	65	78
1.2	27	32	38	46	55	67	80
1.4	27	33	39	47	57	69	82
1.6	28	33	40	48	58	70	84
1.8	29	34	41	49	60	72	86
2.0	29	35	41	50	61	74	88
2.2	30	35	42	51	62	75	90
2.4	30	36	43	52	63	77	92
2.6	31	37	44	53	65	78	94
2.8	31	37	45	54	66	80	96
3.0	32	38	46	55	67	81	97

[1]These CT values achieve greater than a 99.99 percent inactivation of viruses. CT values between the indicated pH values may be determined by linear interpolation. CT values between the indicated temperatures of different tables may be determined by linear interpolation. If no interpolation is used, use the $CT_{99.9}$ value at the lower temperature and at the higher pH.

TABLE-7

CT VALUES ($CT_{99.9}$) FOR 99.9 PERCENT INACTIVATION OF GIARDIA LAMBLIA CYSTS BY CHLORINE DIOXIDE AND OZONE[1]

	Temperature					
	≦1°C	5°	10°	15°	20°	25°C
Chlorine dioxide...	63	26	23	19	15	11
Ozone.....	2.9	1.9	1.4	0.95	0.72	0.48

[1]These CT values achieve greater than a 99.99 percent inactivation of viruses. CT values between the indicated temperatures may be determined by linear interpolation. If no interpolation is used, use the $CT_{99.9}$ value at the lower temperature for determining $CT_{99.9}$ values between indicated temperatures.

TABLE-8

CT VALUES ($CT_{99.9}$) FOR 99.9 PERCENT INACTIVATION OF GIARDIA LAMBLIA CYSTS BY CHLORAMINES[1]

Temperature					
≦1°C	5°	10°	15°	20°	25°C
3,800	2,200	1,850	1,500	1,100	750

[1]These CT values are for pH values of 6 to 9. These CT values may be assumed to achieve greater than 99.99 percent inactivation of viruses only if chlorine is added and mixed in the water prior to the addition of ammonia. If this condition is not met, the system must demonstrate, based on on-site studies or other information, as approved by the department, that the system is achieving at least 99.99 percent inactivation of viruses. CT values between the indicated temperatures may be determined by linear interpolation. If no interpolation is used, use the $CT_{99.9}$ value at the lower temperature for determining $CT_{99.9}$ values between indicated temperatures.

TABLE-9 CT VALUES FOR INACTIVATION OF GIARDIA CYSTS BY FREE CHLORINE AT 0.5°C OR LOWER

Cl_2 CONC. mg/L	pH<=6 LOG INACTIVATIONS 0.5	1.0	1.5	2.0	2.5	3.0	PH=6.5 LOG INACTIVATIONS 0.5	1.0	1.5	2.0	2.5	3.0	pH=7.0 LOG INACTIVATIONS 0.5	1.0	1.5	2.0	2.5	3.0	pH=7.5 LOG INACTIVATIONS 0.5	1.0	1.5	2.0	2.5	3.0
≦0.4	23	46	69	91	114	137	27	54	82	109	136	163	33	65	98	130	163	195	40	79	119	158	198	237
0.6	24	47	71	94	118	141	28	56	84	112	140	168	33	67	100	133	167	200	40	80	120	159	199	239
0.8	24	48	73	97	121	145	29	57	86	115	143	172	34	68	103	137	171	205	41	82	123	164	205	246
1.0	25	49	74	99	123	148	29	59	88	117	147	176	35	70	105	140	175	210	42	84	127	169	211	253
1.2	25	51	76	101	127	152	30	60	90	120	150	180	36	72	108	143	179	215	43	86	130	173	216	259
1.4	26	52	78	103	129	155	31	61	92	123	153	184	37	74	111	147	184	221	44	89	133	177	222	266
1.6	26	52	79	105	131	157	32	63	95	126	158	189	38	75	113	151	188	226	46	91	137	182	228	273
1.8	27	54	81	108	135	162	32	64	97	129	161	193	39	77	116	154	193	231	47	93	140	186	233	279
2.0	28	55	83	110	138	165	33	66	99	131	164	197	39	79	118	157	197	236	48	95	143	191	238	286
2.2	28	56	85	113	141	169	34	67	101	134	168	201	40	81	121	161	202	242	50	99	149	198	248	297
2.4	29	57	86	115	143	172	34	68	103	137	171	205	41	82	124	165	206	247	50	99	149	199	248	298
2.6	29	58	88	117	146	175	35	70	105	139	174	209	42	84	126	168	210	252	51	101	152	203	253	304
2.8	30	59	89	119	148	178	36	71	107	142	178	213	43	86	129	171	214	257	52	103	155	207	258	310
3.0	30	60	91	121	151	181	36	72	109	145	181	217	44	87	131	174	218	261	53	105	158	211	263	316

Cl_2 CONC. mg/L	pH=8.0 LOG INACTIVATIONS 0.5	1.0	1.5	2.0	2.5	3.0	pH=8.5 LOG INACTIVATIONS 0.5	1.0	1.5	2.0	2.5	3.0	pH=9.0 LOG INACTIVATIONS 0.5	1.0	1.5	2.0	2.5	3.0
≦0.4	46	92	139	185	231	277	55	110	165	219	274	329	65	130	195	260	325	390
0.6	48	95	143	191	238	286	57	114	171	228	285	342	68	136	204	271	339	407
0.8	49	98	148	197	246	295	59	118	177	236	295	354	70	141	211	281	352	422
1.0	51	101	152	203	253	304	61	122	183	243	304	365	73	146	219	291	364	437
1.2	52	104	157	209	261	313	63	125	188	251	313	376	75	150	226	301	376	451
1.4	54	107	161	214	268	321	65	129	194	258	323	387	77	155	232	309	387	464
1.6	55	110	165	219	274	329	66	132	199	265	331	397	80	159	239	318	398	477
1.8	56	113	169	225	282	338	68	136	204	271	339	407	82	163	245	326	408	489
2.0	58	115	173	231	288	346	70	139	209	278	348	417	83	167	250	333	417	500
2.2	59	118	177	235	294	353	71	142	213	284	355	426	85	170	256	341	426	511
2.4	60	120	181	241	301	361	73	145	218	290	363	435	87	174	261	348	435	522
2.6	61	123	184	245	307	368	74	148	222	296	370	444	89	178	267	355	444	533
2.8	63	125	188	250	313	375	75	151	226	301	377	452	91	181	272	362	453	543
3.0	64	127	191	255	318	382	77	153	230	307	383	460	92	184	276	368	460	552

NOTE: $CT_{99.9}$=CT for 3-log inactivation

TABLE-10 CT VALUES FOR INACTIVATION OF GIARDIA CYSTS BY FREE CHLORINE AT 5°C

Cl_2 CONC. mg/L	pH<=6 LOG INACTIVATIONS						PH=6.5 LOG INACTIVATIONS						pH=7.0 LOG INACTIVATIONS						pH=7.5 LOG INACTIVATIONS					
	0.5	1.0	1.5	2.0	2.5	3.0	0.5	1.0	1.5	2.0	2.5	3.0	0.5	1.0	1.5	2.0	2.5	3.0	0.5	1.0	1.5	2.0	2.5	3.0
≦0.4	16	32	49	65	81	97	20	39	59	78	98	117	23	46	70	93	116	139	28	55	83	111	138	166
0.6	17	33	50	67	83	100	20	40	60	80	100	120	24	48	72	95	119	143	29	57	86	114	143	171
0.8	17	34	52	69	86	103	20	41	61	81	102	122	24	49	73	97	122	146	29	58	88	117	146	175
1.0	18	35	53	70	88	105	21	42	63	83	104	125	25	50	75	99	124	149	30	60	90	119	149	179
1.2	18	36	54	71	89	107	21	42	64	85	106	127	25	51	76	101	127	152	31	61	92	122	153	183
1.4	18	36	55	73	91	109	22	43	65	87	108	130	26	52	78	103	129	155	31	62	94	125	156	187
1.6	19	37	56	74	93	111	22	44	66	88	110	132	26	53	79	105	132	158	32	64	96	128	160	192
1.8	19	38	57	76	95	114	23	45	68	90	113	135	27	54	81	108	135	162	33	65	98	131	163	196
2.0	19	39	58	77	97	116	23	46	69	92	115	138	28	55	83	110	138	165	33	67	100	133	167	200
2.2	20	39	59	79	98	118	23	47	70	93	117	140	28	56	85	113	141	169	34	68	102	136	170	204
2.4	20	40	60	80	100	120	24	48	72	95	119	143	29	57	86	115	143	172	35	70	105	139	174	209
2.6	20	41	61	81	102	122	24	49	73	97	122	146	29	58	88	117	146	175	36	71	107	142	178	213
2.8	21	41	62	83	103	124	25	49	74	99	123	148	30	59	89	119	148	178	36	72	109	145	181	217
3.0	21	42	63	84	105	126	25	50	76	101	126	151	30	61	91	121	152	182	37	74	111	147	184	221

Cl_2 CONC. mg/L	pH=8.0 LOG INACTIVATIONS						pH=8.5 LOG INACTIVATIONS						pH=9.0 LOG INACTIVATIONS					
	0.5	1.0	1.5	2.0	2.5	3.0	0.5	1.0	1.5	2.0	2.5	3.0	0.5	1.0	1.5	2.0	2.5	3.0
≦0.4	33	66	99	132	165	198	39	79	118	157	197	236	47	93	140	186	233	279
0.6	34	68	102	136	170	204	41	81	122	163	203	244	49	97	146	194	243	291
0.8	35	70	105	140	175	210	42	84	126	168	210	252	50	100	151	201	251	301
1.0	36	72	108	144	180	216	43	87	130	173	217	260	52	104	156	208	260	312
1.2	37	74	111	147	184	221	45	89	134	178	223	267	53	107	160	213	267	320
1.4	38	76	114	151	189	227	46	91	137	183	228	274	55	110	165	219	274	329
1.6	39	77	116	155	193	232	47	94	141	187	234	281	56	112	169	225	281	337
1.8	40	79	119	159	198	238	48	96	144	191	239	287	58	115	173	230	288	345
2.0	41	81	122	162	203	243	49	98	147	196	245	294	59	118	177	235	294	353
2.2	41	83	124	165	207	248	50	100	150	200	250	300	60	120	181	241	301	361
2.4	42	84	127	169	211	253	51	102	153	204	255	306	61	123	184	245	307	368
2.6	43	86	129	172	215	258	52	104	156	208	260	312	63	125	188	250	313	375
2.8	44	88	132	175	219	263	53	106	159	212	265	318	64	127	191	255	318	382
3.0	45	89	134	179	223	268	54	108	162	216	270	324	65	130	195	259	324	389

NOTE: $CT_{99.9}$=CT for 3-log inactivation

TABLE-11 CT VALUES FOR INACTIVATION OF GIARDIA CYSTS BY FREE CHLORINE AT 10°C

Cl_2 CONC. mg/L	pH<=6 LOG INACTIVATIONS 0.5	1.0	1.5	2.0	2.5	3.0	PH=6.5 LOG INACTIVATIONS 0.5	1.0	1.5	2.0	2.5	3.0	pH=7.0 LOG INACTIVATIONS 0.5	1.0	1.5	2.0	2.5	3.0	pH=7.5 LOG INACTIVATIONS 0.5	1.0	1.5	2.0	2.5	3.0
≦0.4	12	24	37	49	61	73	15	29	44	59	73	88	17	35	52	69	87	104	21	42	63	83	104	125
0.6	13	25	38	50	63	75	15	30	45	60	75	90	18	36	54	71	89	107	21	43	64	85	107	128
0.8	13	26	39	52	65	78	15	31	46	61	77	92	18	37	55	73	92	110	22	44	66	87	109	131
1.0	13	26	40	53	66	79	16	31	47	63	78	94	19	37	56	75	93	112	22	45	67	89	112	134
1.2	13	27	40	53	67	80	16	32	48	63	79	95	19	38	57	76	95	114	23	46	69	91	114	137
1.4	14	27	41	55	68	82	16	33	49	65	82	98	19	39	58	77	97	116	23	47	70	93	117	140
1.6	14	28	42	55	69	83	17	33	50	66	83	99	20	40	60	79	99	119	24	48	72	96	120	144
1.8	14	29	43	57	72	86	17	34	51	67	84	101	20	41	61	81	102	122	25	49	74	98	123	147
2.0	15	29	44	58	73	87	17	35	52	69	87	104	21	41	62	83	103	124	25	50	75	100	125	150
2.2	15	30	45	59	74	89	18	35	53	70	88	105	21	42	64	85	106	127	26	51	77	102	128	153
2.4	15	30	45	60	75	90	18	36	54	71	89	107	22	43	65	86	108	129	26	52	79	105	131	157
2.6	15	31	46	61	77	92	18	37	55	73	92	110	22	44	66	87	109	131	27	53	80	107	133	160
2.8	16	31	47	62	78	93	19	37	56	74	93	111	22	45	67	89	112	134	27	54	82	109	136	163
3.0	16	32	48	63	79	95	19	38	57	75	94	113	23	46	69	91	114	137	28	55	83	111	138	166

Cl_2 CONC. mg/L	pH=8.0 LOG INACTIVATIONS 0.5	1.0	1.5	2.0	2.5	3.0	pH=8.5 LOG INACTIVATIONS 0.5	1.0	1.5	2.0	2.5	3.0	pH=9.0 LOG INACTIVATIONS 0.5	1.0	1.5	2.0	2.5	3.0
≦0.4	25	50	75	99	124	149	30	59	89	118	148	177	35	70	105	139	174	209
0.6	26	51	77	102	128	153	31	61	92	122	153	183	36	73	109	145	182	218
0.8	26	53	79	105	132	158	32	63	95	126	158	189	38	75	113	151	188	226
1.0	27	54	81	108	135	162	33	65	98	130	163	195	39	78	117	156	195	234
1.2	28	55	83	111	138	166	33	67	100	133	167	200	40	80	120	160	200	240
1.4	28	57	85	113	142	170	34	69	103	137	172	206	41	82	124	165	206	247
1.6	29	58	87	116	145	174	35	70	106	141	176	211	42	84	127	169	211	253
1.8	30	60	90	119	149	179	36	72	108	143	179	215	43	86	130	173	216	259
2.0	30	61	91	121	152	182	37	74	111	147	184	221	44	88	133	177	221	265
2.2	31	62	93	124	155	186	38	75	113	150	188	225	45	90	136	181	226	271
2.4	32	63	95	127	158	190	38	77	115	153	192	230	46	92	138	184	230	276
2.6	32	65	97	129	162	194	39	78	117	156	195	234	47	94	141	187	234	281
2.8	33	66	99	131	164	197	40	80	120	159	199	239	48	96	144	191	239	287
3.0	34	67	101	134	168	201	41	81	122	162	203	243	49	97	146	195	243	292

NOTE: $CT_{99.9}$=CT for 3-log inactivation

TABLE-12 CT VALUES FOR INACTIVATION OF GIARDIA CYSTS BY FREE CHLORINE AT 15°C

Cl_2 CONC. mg/L	pH<=6 LOG INACTIVATIONS						PH=6.5 LOG INACTIVATIONS						pH=7.0 LOG INACTIVATIONS						pH=7.5 LOG INACTIVATIONS					
	0.5	1.0	1.5	2.0	2.5	3.0	0.5	1.0	1.5	2.0	2.5	3.0	0.5	1.0	1.5	2.0	2.5	3.0	0.5	1.0	1.5	2.0	2.5	3.0
≦0.4	3	16	25	33	41	49	10	20	30	39	49	59	12	23	35	47	58	70	14	28	42	55	69	83
0.6	3	17	25	33	42	50	10	20	30	40	50	60	12	24	36	48	60	72	14	29	43	57	72	86
0.8	9	17	26	35	43	52	10	20	31	41	51	61	12	24	37	49	61	73	15	29	44	59	73	88
1.0	9	18	27	35	44	53	11	21	32	42	53	63	13	25	38	50	63	75	15	30	45	60	75	90
1.2	9	18	27	36	45	54	11	21	32	43	53	64	13	25	38	51	63	76	15	31	46	61	77	92
1.4	9	18	28	37	46	55	11	22	33	43	54	65	13	26	39	52	65	78	16	31	47	63	78	94
1.6	9	19	28	37	47	56	11	22	33	44	55	66	13	26	40	53	66	79	16	32	48	64	80	96
1.8	10	19	29	38	48	57	11	23	34	45	57	68	14	27	41	54	68	81	16	33	49	65	82	98
2.0	10	19	29	39	48	58	12	23	35	46	58	69	14	28	42	55	69	83	17	33	50	67	83	100
2.2	10	20	30	39	49	59	12	23	35	47	58	70	14	28	43	57	71	85	17	34	51	68	85	102
2.4	10	20	30	40	50	60	12	24	36	48	60	72	14	29	43	57	72	86	18	35	53	70	88	105
2.6	10	20	31	41	51	61	12	24	37	49	61	73	15	29	44	59	73	88	18	36	54	71	89	107
2.8	10	21	31	41	52	62	12	25	37	49	62	74	15	30	45	59	74	89	18	36	55	73	91	109
3.0	11	21	32	42	53	63	13	25	38	51	63	76	15	30	46	61	76	91	19	37	56	74	93	111

C182 CONC. mg/L	pH=8.0 LOG INACTIVATIONS						pH=8.5 LOG INACTIVATIONS						pH=9.0 LOG INACTIVATIONS					
	0.5	1.0	1.5	2.0	2.5	3.0	0.5	1.0	1.5	2.0	2.5	3.0	0.5	1.0	1.5	2.0	2.5	3.0
≦0.4	17	33	50	66	83	99	20	39	59	79	98	118	23	47	70	93	117	140
0.6	17	34	51	68	85	102	20	41	61	81	102	122	24	49	73	97	122	146
0.8	18	35	53	70	88	105	21	42	63	84	105	126	25	50	76	101	126	151
1.0	18	36	54	72	90	108	22	43	65	87	108	130	26	52	78	104	130	156
1.2	19	37	56	74	93	111	22	45	67	89	112	134	27	53	80	107	133	160
1.4	19	38	57	76	95	114	23	46	69	91	114	137	28	55	83	110	138	165
1.6	19	39	58	77	97	116	24	47	71	94	118	141	28	56	85	113	141	169
1.8	20	40	60	79	99	119	24	48	72	96	120	144	29	58	87	115	144	173
2.0	20	41	61	81	102	122	25	49	74	98	123	147	30	59	89	118	148	177
2.2	21	41	62	83	103	124	25	50	75	100	125	150	30	60	91	121	151	181
2.4	21	42	64	85	106	127	26	51	77	102	128	153	31	61	92	123	153	184
2.6	22	43	65	86	108	129	26	52	78	104	130	156	31	63	94	125	157	188
2.8	22	44	66	88	110	132	27	53	80	106	133	159	32	64	96	127	159	191
3.0	22	45	67	89	112	134	27	54	81	108	135	162	33	65	98	130	163	195

NOTE: $CT_{99.9}$=CT for 3-log inactivation

TABLE-13 CT VALUES FOR INACTIVATION OF GIARDIA CYSTS BY FREE CHLORINE AT 20°C

Cl_2 CONC. mg/L	pH<=6 LOG INACTIVATIONS 0.5	1.0	1.5	2.0	2.5	3.0	PH=6.5 LOG INACTIVATIONS 0.5	1.0	1.5	2.0	2.5	3.0	pH=7.0 LOG INACTIVATIONS 0.5	1.0	1.5	2.0	2.5	3.0	pH=7.5 LOG INACTIVATIONS 0.5	1.0	1.5	2.0	2.5	3.0
≦0.4	6	12	18	24	30	36	7	15	22	29	37	44	9	17	26	35	43	52	10	21	31	41	52	62
0.6	6	13	19	25	32	38	8	15	23	30	38	45	9	18	27	36	45	54	11	21	32	43	53	64
0.8	7	13	20	26	33	39	8	15	23	31	38	46	9	18	28	37	46	55	11	22	33	44	55	66
1.0	7	13	20	26	33	39	8	16	24	31	39	47	9	19	28	37	47	56	11	22	34	45	56	67
1.2	7	13	20	27	33	40	8	16	24	32	40	48	10	19	29	38	48	57	12	23	35	46	58	69
1.4	7	14	21	27	34	41	8	16	25	33	41	49	10	19	29	39	48	58	12	23	35	47	58	70
1.6	7	14	21	28	35	42	8	17	25	33	42	50	10	20	30	39	49	59	12	24	36	48	60	72
1.8	7	14	22	29	36	43	9	17	26	34	43	51	10	20	31	41	51	61	12	25	37	49	62	74
2.0	7	15	22	29	37	44	9	17	26	35	43	52	10	21	31	41	52	62	13	25	38	50	63	75
2.2	7	15	22	29	37	44	9	18	27	35	44	53	11	21	32	42	53	63	13	26	39	51	64	77
2.4	8	15	23	30	38	45	9	18	27	36	45	54	11	22	33	43	54	65	13	26	39	52	65	78
2.6	8	15	23	31	38	46	9	18	28	37	46	55	11	22	33	44	55	66	13	27	40	53	67	80
2.8	8	16	24	31	39	47	9	19	28	37	47	56	11	22	34	45	56	67	14	27	41	54	68	81
3.0	8	16	24	31	39	47	10	19	29	38	48	57	11	23	34	45	57	68	14	28	42	55	69	83

Cl_2 CONC. mg/L	pH=8.0 LOG INACTIVATIONS 0.5	1.0	1.5	2.0	2.5	3.0	pH=8.5 LOG INACTIVATIONS 0.5	1.0	1.5	2.0	2.5	3.0	pH=9.0 LOG INACTIVATIONS 0.5	1.0	1.5	2.0	2.5	3.0
≦0.4	12	25	37	49	62	74	15	30	45	59	74	89	18	35	53	70	88	105
0.6	13	26	39	51	64	77	15	31	46	61	77	92	18	36	55	73	91	109
0.8	13	26	40	53	66	79	16	32	48	63	79	95	19	38	57	75	94	113
1.0	14	27	41	54	68	81	16	33	49	65	82	98	20	39	59	78	98	117
1.2	14	28	42	55	69	83	17	33	50	67	83	100	20	40	60	80	100	120
1.4	14	28	43	57	71	85	17	34	52	69	86	103	21	41	62	82	103	123
1.6	15	29	44	58	73	87	18	35	53	70	88	105	21	42	63	84	105	126
1.8	15	30	45	59	74	89	18	36	54	72	90	108	22	43	65	86	108	129
2.0	15	30	46	61	76	91	18	37	55	73	92	110	22	44	66	88	110	132
2.2	16	31	47	62	78	93	19	38	57	75	94	113	23	45	68	90	113	135
2.4	16	32	48	63	79	95	19	38	58	77	96	115	23	46	69	92	115	138
2.6	16	32	49	65	81	97	20	39	59	78	98	117	24	47	71	94	118	141
2.8	17	33	50	66	83	99	20	40	60	79	99	119	24	48	72	95	119	143
3.0	17	34	51	67	84	101	20	41	61	81	102	122	24	49	73	97	122	146

NOTE: $CT_{99.9}$=CT for 3-log inactivation

TABLE-14 CT VALUES FOR INACTIVATION OF GIARDIA CYSTS BY FREE CHLORINE AT 25°C OR HIGHER

Cl_2 CONC. mg/L	pH<=6 LOG INACTIVATIONS 0.5	1.0	1.5	2.0	2.5	3.0	PH=6.5 LOG INACTIVATIONS 0.5	1.0	1.5	2.0	2.5	3.0	pH=7.0 LOG INACTIVATIONS 0.5	1.0	1.5	2.0	2.5	3.0	pH=7.5 LOG INACTIVATIONS 0.5	1.0	1.5	2.0	2.5	3.0
≦0.4	4	8	12	16	20	24	5	10	15	19	24	29	6	12	18	23	29	35	7	14	21	28	35	42
0.6	4	8	13	17	21	25	5	10	15	20	25	30	6	12	18	24	30	36	7	14	22	29	36	43
0.8	4	9	13	17	22	26	5	10	16	21	26	31	6	12	19	25	31	37	7	15	22	29	37	44
1.0	4	9	13	17	22	26	5	10	16	21	26	31	6	12	19	25	31	37	8	15	23	30	38	45
1.2	5	9	14	18	23	27	5	11	16	21	27	32	6	13	19	25	32	38	8	15	23	31	38	46
1.4	5	9	14	18	23	27	6	11	17	22	28	33	7	13	20	26	33	39	8	16	24	31	39	47
1.6	5	9	14	19	23	28	6	11	17	22	28	33	7	13	20	27	33	40	8	16	24	32	40	48
1.8	5	10	15	19	24	29	6	11	17	23	28	34	7	14	21	27	34	41	8	16	25	33	41	49
2.0	5	10	15	19	24	29	6	12	18	23	29	35	7	14	21	27	34	41	8	17	25	33	42	50
2.2	5	10	15	20	25	30	6	12	18	23	29	35	7	14	21	28	35	42	9	17	26	34	43	51
2.4	5	10	15	20	25	30	6	12	18	24	30	36	7	14	22	29	36	43	9	17	26	35	43	52
2.6	5	10	16	21	26	31	6	12	19	25	31	37	7	15	22	29	37	44	9	18	27	35	44	53
2.8	5	10	16	21	26	31	6	12	19	25	31	37	8	15	23	30	38	45	9	18	27	36	45	54
3.0	5	11	16	21	27	32	6	13	19	25	32	38	8	15	23	31	38	46	9	18	28	37	46	55

Cl_2 CONC. mg/L	pH=8.0 LOG INACTIVATIONS 0.5	1.0	1.5	2.0	2.5	3.0	pH=8.5 LOG INACTIVATIONS 0.5	1.0	1.5	2.0	2.5	3.0	pH<=9.0 LOG INACTIVATIONS 0.5	1.0	1.5	2.0	2.5	3.0
≦0.4	8	17	25	33	42	50	10	20	30	39	49	59	12	23	35	47	58	70
0.6	9	17	26	34	43	51	10	20	31	41	51	61	12	24	37	49	61	73
0.8	9	18	27	35	44	53	11	21	32	42	53	63	13	25	38	50	63	75
1.0	9	18	27	36	45	54	11	22	33	43	54	65	13	26	39	52	65	78
1.2	9	18	28	37	46	55	11	22	34	45	56	67	13	27	40	53	67	80
1.4	10	19	29	38	48	57	12	23	35	46	58	69	14	27	41	55	68	82
1.6	10	19	29	39	48	58	12	23	35	47	58	70	14	28	42	56	70	84
1.8	10	20	30	40	50	60	12	24	36	48	60	72	14	29	43	57	72	86
2.0	10	20	31	41	51	61	12	25	37	49	62	74	15	29	44	59	73	88
2.2	10	21	31	41	52	62	13	25	38	50	63	75	15	30	45	60	75	90
2.4	11	21	32	42	53	63	13	26	39	51	64	77	15	31	46	61	77	92
2.6	11	22	33	43	54	65	13	26	39	52	65	78	16	31	47	63	78	94
2.8	11	22	33	44	55	66	13	27	40	53	67	80	16	32	48	64	80	96
3.0	11	22	34	45	56	67	14	27	41	54	68	81	16	32	49	65	81	97

NOTE: $CT_{99.9}$=CT for 3-log inactivation

TABLE-15

CT VALUES FOR INACTIVATION OF VIRUSES BY FREE CHLORINE[1,2]

Log Inactivation	2.0		3.0		4.0	
pH	6-9	10	6-9	10	6-9	10
Temperature						
0.5°C	6	45	9	66	12	90
5.0°C	4	30	6	44	8	60
10.0°C	3	22	4	33	6	45
15.0°C	2	15	3	22	4	30
20.0°C	1	11	2	16	3	22
25.0°C	1	7	1	11	2	15

Notes:

1. Data adapted from Sobsey (1988) for inactivation of Hepatitis A virus (HAV) at pH = 6, 7, 8, 9, and 10 and temperature = 5°C. CT values include a safety factor of 3.

2. CT values adjusted to other temperatures by doubling CT for each 10°C drop in temperature.

TABLE-16

CT VALUES FOR INACTIVATION OF GIARDIA CYSTS BY CHLORINE DIOXIDE pH 6-9

Inactivation	Temperature					
	≤1°C	5°C	10°C	15°C	20°C	25°C
0.5 log	10.0	4.3	4.0	3.2	2.5	2.0
1.0 log	21.0	8.7	7.7	6.3	5.0	3.7
1.5 log	32.0	13.0	12.0	10.0	7.5	5.5
2.0 log	42.0	17.0	15.0	13.0	10.0	7.3
2.5 log	52.0	22.0	19.0	16.0	13.0	9.0
3.0 log	63.0	26.0	23.0	19.0	15.0	11.0

TABLE-17

CT VALUES FOR INACTIVATION OF VIRUSES BY CHLORINE DIOXIDE pH 6-9[1,2]

Inactivation	Temperature					
	≤1°C	5°C	10°C	15°C	20°C	25°C
2.0 log	8.4	5.6	4.2	2.8	2.1	1.4
3.0 log	25.6	17.1	12.8	8.6	6.4	4.3
4.0 log	50.1	33.4	25.1	16.7	12.5	8.4

Notes:

1. Data adapted from Sobsey (1988) for inactivation of Hepatitis A virus (HAV) at pH = 6 and temperature = 5°C. CT values include a safety factor of 2.

2. CT values adjusted to other temperatures by doubling CT for each 10°C drop in temperature.

TABLE-18

CT VALUES FOR INACTIVATION OF GIARDIA CYSTS BY OZONE pH 6-9

Inactivation	Temperature					
	≤1°C	5°C	10°C	15°C	20°C	25°C
0.5 log	0.48	0.32	0.23	0.16	0.12	0.08
1.0 log	0.97	0.63	0.48	0.32	0.24	0.16
1.5 log	1.50	0.95	0.72	0.48	0.36	0.24
2.0 log	1.90	1.30	0.95	0.63	0.48	0.32
2.5 log	2.40	1.60	1.20	0.79	0.60	0.40
3.0 log	2.90	1.90	1.43	0-.95	0.72	0.48

TABLE-19

CT VALUES FOR INACTIVATION OF VIRUSES BY OZONE[1,2]

Inactivation	Temperature					
	≦1°C	5°C	10°C	15°C	20°C	25°C
2.0 log	0.90	0.60	0.50	0.30	0.25	0.15
3.0 log	1.40	0.90	0.80	0.50	0.40	0.25
4.0 log	1.80	1.20	1.00	0.60	0.50	0.30

Notes:

1. Data adapted from Sobsey (1988) for inactivation of poliovirus for pH = 6 and temperature = 5°C. CT values include a safety factor of 3.

2. CT values adjusted to other temperatures by doubling CT for each 10°C drop in temperature.

TABLE-20

CT VALUES FOR INACTIVATION OF GIARDIA CYSTS BY CHLORAMINE pH 6-9

Inactivation	Temperature					
	≦1°C	5°C	10°C	15°C	20°C	25°C
0.5 log	635	365	310	250	185	125
1.0 log	1,270	735	615	500	370	250
1.5 log	1,900	1,100	930	750	550	375
2.0 log	2,535	1,470	1,230	1,000	735	500
2.5 log	3,170	1,830	1,540	1,250	915	625
3.0 log	3,800	2,200	1,850	1,500	1,100	750

TABLE-21

CT VALUES FOR INACTIVATION OF VIRUSES BY CHLORAMINE(1,2,3)

Inactivation	Temperature					
	≤1°C	5°C	10°C	15°C	20°C	25°C
2.0 log	1,243	857	643	428	321	214
3.0 log	2,063	1,423	1,067	712	534	356
4.0 log	2,883	1,988	1,491	994	746	497

Notes:

1. Data adapted from Sobsey (1988) for inactivation of Hepatitis A Virus (HAV) for pH = 8.0 and temperature = 5°C, and assumed to apply for pHs in the range of 6.0 to 10.0.

2. CT values adjusted to other temperatures by doubling CT for each 10°C drop in temperature.

3. This table of CT values applies for systems using combined chlorine where chlorine is added prior to ammonia in the treatment sequence. CT values in this table should not be used for estimating the adequacy of disinfection in systems applying preformed chloramines or ammonia ahead of chlorine.

3.1 CALCULATIONS FOR TOTAL INACTIVATION RATIO

3.1.1 One Point of Disinfection

If the system uses only one point of disinfectant application, the system may determine the total inactivation ratio based on either of the following two methods:

a. One inactivation ratio ($CT_{calc}/CT_{99.9}$) is determined beore or at the first customer during peak hourly flow. If the $CT_{calc}/CT_{99.9} > 1.0$, the 99.9 percent Giardia Lamblia inactivation requirement has been achieved; or

b. Successive $CT_{calc}/CT_{99.9}$ values, representing sequential inactivation ratios, are determined between the point of disinfectant application and a point before or at the first customer during peak hourly flow. Under this alternative, the following method must be used to calculate the total inactivation ratio:

(1) Determine $\frac{CT_{calc}}{CT_{99.9}}$ for each sequence.

(2) Add the $\frac{CT_{calc}}{CT_{99.9}}$ values together $\left(\Sigma \frac{CT_{calc}}{CT_{99.9}} \right)$

(3) If $\Sigma \left(\frac{CT_{calc}}{CT_{99.9}} \right) > 1.0$, the 99.9 % <u>Giardia Lamblia</u> inactivation requirement is achieved

3.1.2 For More Than One Point of Disinfection

If the system uses more than one point of disinfectant application before or at the first customer, the system must determine the CT value of each disinfection sequence immediately prior to the next point of disinfectant application during peak hourly flow. The sum of the $CT_{calc}/CT_{99.9}$ value of each sequence

$$\Sigma \frac{CT_{calc}}{CT_{99.9}}$$

must be calculated using the above method in (A)(2) determine if the system is in compliance with the required disinfection.

3.1.3 For One or More Points of Residual Disinfection Monitoring

Although not required, the total percent inactivation for a system with one or more points of residual disinfection concentration monitoring may be calculated by solving the following equation:

$$\text{Percent inactivation} = 100 - \frac{100}{10^{Z}}$$

$$\text{Where } Z = 3 \times \Sigma \frac{CT_{calc}}{CT_{99.9}}$$

3.2 CONVERSIONS

3.2.1 Log Removal to Percent Removal

Using the equation

$$x\text{Log Removal} = 1 - \frac{1}{10^x} \text{ Percent Removal}$$

0.5 log removal = 68.4 percent removal

1.0 log removal = 90.0 percent removal

1.5 log removal = 96.84 percent removal

2.0 log removal = 99.00 percent removal

2.5 log removal = 99.68 percent removal

3.0 log removal = 99.90 percent removal

4.0 log removal = 99.99 percent removal

A conventional filtration treatment process inactivates and/or removes 99.68 percent (2.5 log) of Giardia Lamblia cysts and 99.00 percent (2.0 log) of viruses. To obtain the reguired 99.90 percent (3.0 log) inactivation and/or removal of Giardia Lamblia cysts and 99.99 percent (4.0 log) inactivation and/or removal of viruses the following shall be applied:

3.2.2 Disnfection Requirement for Giardia Lamblia cysts

Conventional Filtration Treatment removal - 99.68% (2.5 log)

Reguired additional removal:

0.5 log = 68.4%

since 2.5 log leaves

100% - 99.68% = .32%

additional 0.5 log removal

0.32% x 68.4% = 0.22%

Reguired disinfection removal --------- 0.22%

Total Giardia Lamblia cysts removal - 99.90% (3 log)

3.2.3 Dsinfection Requirements For Viruses

Conventional Filtration Treatment removal - 99.00% (2 log)

Required additional removal

2.0 log = 99.00%

since 2 log leaves

100% - 99.00% = 1.00%

additional 2.0 log removal

1.00% x 99.00% = 0.99%

Required disinfection removal ---------- 99.99% (4 log)

GROUND WATERS UNDER DIRECT INFLUENCE OF SURFACE WATER

4.0 GENERAL

Ground water sources which may be subject to contamination with pathogenic organisms from surface waters include, infiltration galleries, wells or other collectors in subsurface aquifers. The following presents a recommended procedure for determining whether a source will be subject to the Missouri Public Drinking Water Regulations. These determinations are to be made for each individual source. If the determination will involve an evaluation of water quality, e.g., particulate analysis, it is important that these analyses be made on water taken directly from the source and not on blended water or water from the distribution system.

The Missouri Department of Natural Resources (MDNR) has the responsibility for determining which water supplies must meet the requirements of the Missouri Public Drinking Water Regulations. However, it is the responsibility of the water purveyors to provide the MDNR with the information needed to make this determination.

4.1 SOURCE EVALUATION OUTLINE

The determination of whether a source is subject to the Missouri Public Drinking Water Regulations may involve one or more of the following steps:

Step 1. A review of the records of the system's source(s) to determine whether the source is obviously a surface water, i.e. pond, lake, streams, etc.

Step 2. If the source is a well, determination of whether it is clearly a ground water source, or whether further analysis is needed.

Step 3. A complete review of the system's files followed by a field sanitary survey. Pertinent information to gather in the file review and field survey includes:

1. source design and construction,
2. evidence of direct surface water contamination,
3. water quality analysis,
4. indications of waterborne disease outbreaks,
5. operational procedures,
6. customer complaints regarding water quality or water related infectious illness.
7. and geology and hydrology.

Step 4 Conducting particulate analyses and other water quality sampling and analyses.

4.2 STEPS IN DETERMINING DIRECT SURFACE WATER INFLUENCE ON GROUND WATER SOURCE

4.2.1. Step 1 - Records Review

A review of information pertaining to each source should be carried out to identify those sources which are obvious surface waters. These would include ponds, lakes, streams, rivers, reservoirs, etc. If the source is a surface water, then the Missouri Public Drinking Water Regulations would apply. If the source is not an obvious surface water, then further analyses, as presented in Steps 2, 3, or 4, are needed. If the source is a well, go to Step 2. If the source is a spring, it is ground water under the direct influence of surface water. If the source is an infiltration gallery, Ranney well, or any other subsurface source, proceed to Step 3 for a more detailed analysis.

4.2.2. Step 2 - Review of well sources

While most well sources have historically been considered to be all ground water, recent evidence suggests that some wells, especially shallow wells constructed near surface waters, may be directly influenced by surface water. One approach in determining whether a well is subject to contamination by surface water would be to evaluate the water quality of the well by the criteria in Step 4. However, this process is rather expensive, time consuming, and labor intensive. In an attempt to reduce the effort needed to evaluate well sources, a set criteria has been developed to identify wells in protected aquifers which are not subject to contamination from surface water. While these criteria are not as definitive as water quality analysis, it is believed that they provide a reasonable degree of accuracy, and allow for a relatively rapid determination for a large number of well sources.

Wells constructed into consolidated formations which records indicate have been constructed in a manner no less stringent than set forth for non public wells in the Water Well Construction Code 10 CSR 23-3.010 through 10 CSR 23-3.100, promulgated pursuant to the Missouri Water Well Drillers Act, Section 256.600 RSMo. will be considered to be not under the direct influence of surface water. Wells constructed into unconsolidated formations will be constructed into either glacial drift, glacial outwash, or alluviums. Wells constructed into glacial drift or outwash which records indicate have been constructed in a manner no less stringent than set forth for nonpublic wells in the Water Well Construction code 10 CSR 23-3.010 through 10 CSR 23-3.100, promulgated pursuant to the Missouri Well Drillers Act, Section 256.600 RSMo. will be considered to be not under the direct influence of surface water.

Wells constructed into alluvium which records indicate have been constructed in a manner no less stringent than set forth for non public

wells in the Water Well Construction Code 10 CSR 23-3.010 through 10 CSR 23-3.100 will be considered to be not under the direct influence of surface water if:

a. the well casing penetrates a confining bed and is perforated or screened only below the confining bed, or.

b. the well is located at least 200 feet from any surface water, or

c. the well is located less than 200 feet from any surface water, but well operation records indicate the static water level in the well is not hydraulically influenced by the water level of the surface water, or

d. the well is located less than 200 feet from any surface water, but geological information indicates that a boundary layer exists between the well and the surface water.

Wells that do not meet the above requirements must receive further evaluation in accordance with Steps 3 or 4 to determine whether they are directly influenced by surface water.

4.2.3. Step 3 - On Site Inspection

Through correspondence, records or written testimony as to the construction of the water source should be obtained to determine if the source construction meets the requirements of Step 2. If information is obtained to demonstrate that the source construction meets the requirements of Step 2, it will be considered to be not under the direct influence of surface water. However, this information may be unavailable or inconclusive. A sanitary survey may be helpful in establishing a more definite determination of whether the water source is at risk to pathogens from direct surface water influence. The information to obtain during an on site inspection:

4.2.3.1. Whether the well is constructed into consolidated or unconsolidated material, if constructed into unconsolidated material, whether it is glacial drift, outwash, or alluvium, general geology of the area, type of well construction (i.e. drilled, dug, bored, etc.), type of casing (i.e. iron, plastic, concrete, rock, etc.), whether the well has been grouted or the annular space in some other way sealed.

4.2.3.2. Evidence that surface water enters the source through defects such as the lack of a surface seal on wells, improper drainage around a well, infiltration gallery laterals exposed to surface water, springs open to the atmosphere, surface runoff entering a spring or other collector, etc.

4.2.3.3. Distances to obvious surface water sources.

4.2.3.4. Review well operation records to determine if the well is hydraulically influenced by any surface water.

4.2.3.5 Collect water quality data or solicit information which would indicate:

a. the presence of total or fecal coliform in untreated samples,

b. turbidity or temperature data which correlates to rainfall events or to that of nearby surface water.

4.2.3.6 If the survey indicates that the well is subject to direct surface water influence, the source must either be:

a. reconstructed to meet the requirements of Step 2,

b. or be treated in accordance with the Missouri Public Drinking Water Regulations.

4.2.3.7. If the survey does not show conclusive evidence of direct surface water influence, the analysis outlined in Step 4 should be conducted.

4.2.4. Step 4 - Particulate Analysis and other Indicator

4.2.4.1. Surface Water Indicators

Particulate analysis is intended to identify organisms which only occur in surface waters as opposed to ground waters, and whose presence in a ground water would clearly indicate that at least some surface water has been mixed with it. The U.S. EPA Consensus Method in Part-1 of this manual can be used for Giardia cyst analysis.

In 1986 Hoffbuhr et. al. listed six parameters identifiable in a particulate analysis which were believed to be valid indicators of surface contamination of ground water. These were: diatoms, rotifers, coccidia, plant debris, insect parts, and Giardia cysts. Later work by Notestine and Hudson (1988) found that microbiologists did not all define plant debris in the same way, and that deep wells known to be free of direct surface water influence were shown by particulate analysis to contain "plant debris" but none of the other five indicators. Their work suggests that "plant debris" may not currently be a useful tool in determining direct surface water influence, but may be in the future when a standard definition of "plant debris" is developed. Therefore, it is recommended that only the presence of the other five parameters; diatoms and certain other algae, rotifers, coccidia, insect parts, and Giardia, be

used as indicators of direct surface contamination. In addition, if other large diameter (> 7 um) organisms which are clearly of surface water origin such as Diphilobothrium are present, these should also be considered as indicators of direct surface water influence.

4.2.4.2. Interpretation

Since standard methods have not been developed speci- fically for particulate analysis, there has not been consistency in the way samples have been collected and analyzed. Differences in the degree of training and experience of the microbiologists has added further to the difficulty in comparing results from sample to sample, and system to system. The current limitations in sample collection and analytical procedures must be considered when interpreting the results. Until standardized methods are developed, the U.S. EPA Consensus Method included in Part-1 of this manual is recommended as the analytical method for particulate analysis. The following is a discussion of the significance of finding the six indicators identified above.

Identification of Giardia cyst in any source water should be considered conclusive evidence of direct surface water influence. There also is general agreement that the presence of diatoms in source water is conclusive evidence of direct surface water influence. However, it is important that this determination be based on live diatoms, and not empty silica skeletons which may only indicate the historical presence of surface water.

Bluegreen, green, or other chloroplast containing algae require sunlight for their metabolism as do diatoms. For that reason their presence in source water should also be considered as conclusive evidence of direct surface water influence.

Hoffbuhr (1986) indicates that rotifers and insect parts are indicator species and on which species require food sources originating in surface water, would be valuable, but is not readily available at this time. Without knowledge of which species is present, the finding of rotifers indicates that the source is either

a. directly influenced by surface water,

b. or it contains organic matter sufficient to support the growth of rotifers. It could be conservatively assumed based on this evidence alone that such a source is directly influenced by surface water. However, it is recommended that this determination be supported by other evidence, e.g., the source is near a surface water, turbidity fluctuations are significant, etc.

Insects or insect parts likewise may originate in surface water, from the soil, or they may be airborne in uncovered sources. If insects are observed in a particulate analysis sample, it should be confirmed if possible that there is no other route by which insects could contaminate the source other than surface water. For example, if a spring is sampled, and the cover is not well constructed, it is possible that insects found in a sample were airborne rather than waterborne. Insects which spend a portion of their life-cycle in water are the best indicators of direct surface water influence, for example, larvae of mayflies, stoneflies, damsel- flies, and dragonflies. Terrestrial insects should not be ruled out as surface water indicators though, since their accidental presence in surface water is common.

Howell, (1989) has indicated that some insects may burrow and the finding of eggs or burrowing larvae (et. chironomids) may not be good indicators of direct surface water influence. For some insects this may be true, but the distance which insects burrow in subsurface sediments is expected to be small, and insect larvae are generally large in comparison to Giardia cysts. Until further research suggests otherwise, it is recommended that insects or insect parts be considered strong evidence of surface water influence if not direct evidence in and of themselves. The strength of this evidence would be increased if the source in question is near a surface water, and particulate analysis of the surface water found similar insects.

Coccidia are intracellular parasites which occur primarily in vertebrates, e.g., animals and fish, and live in various tissues and organs including the intestinal tract (e.g., Cryptosporidium). Though not frequently identified by normal particulate analysis techniques, coccidia are good indicators of direct surface water contamination since they require a vertebrate host or hosts and are generally large in size (10-20 um or grater). Cryptosporidium is commonly found in surface water, but due to its small size (4 - 6 um) it is not normally identified without specific antibody staining techniques.

Other macroorganisms (> 7 μm) which are parasitic to animals and fish may be found and are good indicators of surface water influence. Examples include, but are not limited to, helminths (e.g., tape worm cysts), ascaris, and Diphyllobothrium.

4.2.4.3. Sampling Method

A suggested protocol for collecting samples is listed below.

a. Sampling Procedure - Samples should be collected using the equipment outlined in the U.S. EPA's Consensus Method included in Part-1 of this manual.

b. Location - Samples should always be collected as close to the source as possible, and prior to any treatment. If samples must be taken after disinfection, samples should be noted and analyzed as soon as possible.

c. Number - A minimum of two samples should be collected during the period the source is most susceptible to surface water influence. Such critical periods will vary from system to system and will need to be determined case by case. For some systems, it may be one or more days following a significant rainfall (e.g. 2 inches in 24 hours). For other systems it may be a period of maximum flows and stream turbidities following spring snowmelt, or during the summer months when water tables are elevated as a result of irrigation. In each case, particulate samples should be collected when the source in question is most effected. A surrogate measure such as source turbidity or depth to water table may be useful in making the decision to monitor. If there is any ambiguity in the particulate analysis results, additional samples should be collected when there is the greatest likelihood that the source will be contaminated by surface water.

d. Volume - Sample volume should be between 500 and 1000 gallons, and should be collected over a 4 to 8 hour time period. It is preferable to analyze a similar (+/- 10%) volume of water for all sources, preferably a large volume, although this may not always be possible due to elevated turbidity or sampling logistics. The volume filtered should be recorded for all samples.

4.2.4.4. Other Indicators

A number of other indicators could be used to provide supportive evidence of surface influence. While particulate analysis probably provides the most direct evidence that pathogens from surface water could be migrating into a ground water source, the following parameters could provide supportive, but less direct, evidence.

a. Turbidity fluctuations of greater than 0.5 - 1 NTU over the course of a year may be indicative of surface water influence. Considerable caution should be used when evaluating turbidity changes though, since the turbidi- ty could be caused by very small particles (< 1um) not originating in a surface water or it could be that larger particles are being filtered out and only the very smallest particles migrate into the water source. Only ground water sources at risk to contamination from Giardia or other large pathogens (< 7 µm) are subject to the MSWTR requirements.

b. Temperature fluctuations may also indicate surface water influence. Fortunately these are easy to obtain and if there is a surface water within 500 feet of the water source, measurements of both should be recorded for comparison. Large changes in surface water temperature closely followed by similar changes in source temperature would be indicative of surface water influence. Also, temperature changes (in degrees F) of greater than 15 to 20% over the course of a year appear to be a characteristic of some sources influenced by surface water (Randall, 1970). Changes in other chemical parameters such as pH, conductivity, hardness, etc., could also be monitored. Again, these would not give a direct indication of whether pathogens originating in surface water were present, but could indicate whether the water chemistry was or was not similar to a nearby surface water and/or whether source water chemistry changed in a similar pattern to surface water chemistry. At this time no numerical guidelines are available to differentiate what is or is not similar, so these comparisons are more qualitative than quantitative.

4.3 SEASONAL SOURCES

Some sources may only be used for part of the year, for example during the summer months when water usage is high. These sources should not be excluded from evaluation and, like other sources, should be evaluated during their period(s) of highest susceptibility. Particular attention should be given to those sources which appear to be directly influenced by surface water during part of the year. There may be times during which these subsurface water sources are not influenced by surface water and other times when they are part or all surface water. If that is the case, then it is critical that careful testing be done prior to, during and at the end of the use of the source. This would be done over several seasons to account for seasonal variation. In practice, it is preferable to use sources which are less vulnerable to contamination since susceptible sources will necessitate ongoing monitoring and close attention to operation.