STATE OF MISSOURI
MISSOURI DEPARTMENT OF NATURAL RESOURCES
GEOLOGICAL SURVEY PROGRAM

INJECTION WELL PERMIT APPLICATION

(TO DRILL, DEEPEN, PLUG BACK, OR CONVERT AN EXISTING WELL)

RECEIVED
JUN 13 2013
Mo Oil & Gas Council

FORM OGC-3I

NOTE ▶ Permit approval **for drilling only, not injection**. Approval or denial for injection determined after Mechanical Integrity Test results reviewed and official notification given.

☑ APPLICATION TO DRILL ☐ DEEPEN ☐ PLUG BACK ☐ FOR AN OIL WELL ☐ OR GAS WELL

NAME OF COMPANY OR OPERATOR		DATE
S & B Operating, LLC		11/15/2012
ADDRESS	**CITY**	**STATE / ZIP CODE**
9393 W 110th Street, Suite 500	Overland Park	KS 66210

DESCRIPTION OF WELL AND LEASE

NAME OF LEASE	WELL NUMBER	ELEVATION (GROUND
Benjamin Clark-Miller exemption	KRI-12	1076'

WELL LOCATION (GIVE FOOTAGE FROM SECTION LINES)

1650 ft. from ☑ North ☐ South section line 1320 ft. from ☑ East ☐ West section line

WELL LOCATION	LATITUDE	LONGITUDE	COUNTY
Sec. 9 Township 46 North Range 33 ☐ East ☑ West	N38 49' 36.66"	W94 34' 14.62"	Cass 037

NEAREST DISTANCE FROM PROPOSED LOCATION TO PROPERTY OR LEASE LINE 990 FEET

DISTANCE FROM PROPOSED LOCATION TO NEAREST DRILLING, COMPLETED OR APPLIED – FOR WELL ON THE SAME LEASE 233 FEET

PROPOSED DEPTH	ROTARY OR CABLE TOOLS	DRILLING CONTRACTOR, NAME AND ADDRESS	APPROX. DATE WORK WILL START
700' 376'el (P/n ~230'el)	Rotary	Utah Oil, LLC	12/25/2012

NUMBER OF ACRES IN LEASE	NUMBER OF WELLS ON LEASE INCLUDING THIS WELL, COMPLETED IN OR DRILLING TO THIS RESERVOIR	NUMBER OF ABANDONED WELLS ON LEASE
120	23	0

IF LEASE PURCHASED WITH ONE OR MORE WELLS DRILLED, FROM WHOM PURCHASED?

NAME N/A

ADDRESS N/A

NO. OF WELLS	
PRODUCING	0
INJECTION	0
INACTIVE	0
ABANDONED	0

STATUS OF BOND	☐ SINGLE WELL AMOUNT $ ____	☑ BLANKET BOND AMOUNT $ 20,000	☑ ON FILE ☐ ATTACHED

REMARKS: (IF THIS IS AN APPLICATION TO DEEPEN OR PLUG BACK, BRIEFLY DESCRIBE WORK TO BE DONE, GIVING PRESENT PRODUCING/INJECTION ZONE AND EXPECTED NEW INJECTION ZONE; USE BACK OF FORM IF NEEDED)

PROPOSED CASING PROGRAM				APPROVED CASING – TO BE FILLED IN BY STATE GEOLOGIST			
AMOUNT	SIZE	WT/FT	CEM.	AMOUNT	SIZE	WT/FT	CEM.
20'	7"	14	6 sks	20'	7"	14	Full Length
700'	2 7/8"	6.5	125 sks	700'	2 7/8"	6.5	

I, the Undersigned, state that I am the COO of the S & B Operating, LLC (Company), and that I am authorized by said company to make this report, and that this report was prepared under my supervision and direction and that the facts stated therein are true, correct, and complete to the best of my knowledge.

SIGNATURE DK DATE 11/15/2012

PERMIT NUMBER 21202

APPROVED DATE 7-3-13

APPROVED BY Joseph A. Gillman

☑ DRILLER'S LOG REQUIRED ☑ E-LOGS REQUIRED IF RUN
☑ CORE ANALYSIS REQUIRED IF RUN ☐ DRILL SYSTEM TEST INFO REQUIRED IF RUN
☐ SAMPLES REQUIRED
☑ SAMPLES NOT REQUIRED
☐ WATER SAMPLES REQUIRED AT ____

NOTE ▶ THIS PERMIT NOT TRANSFERABLE TO ANY OTHER PERSON OR TO ANY OTHER LOCATION. APPROVAL OF THIS PERMIT BY THE OIL AND GAS COUNCIL DOES NOT CONSTITUTE ENDORSEMENT OF THE GEOLOGIC MERITS OF THE PROPOSED WELL NOR ENDORSEMENT OF THE QUALIFICATIONS OF THE PERMITTEE

ONE (1) COPY WILL BE RETURNED.

I, Leech of the Utah (Company), confirm that an approved drilling permit has been obtained by the owner of this well. Council approval of this permit will be shown on this form by presence of a permit number and signature of authorized council representative.

DRILLER'S SIGNATURE	DATE
B. Leech	6/11/13

PROPOSED OPERATIONS DATA

PROPOSED AVERAGE DAILY INJECTION,	Measured @ wellhead PRESSURE 400 PSIG, RATE .035 BPD/GPM, VOLUME 50 BBL/GAL
APPROVED AVERAGE DAILY INJECTION, (TO BE FILLED IN BY STATE GEOLOGIST)	PRESSURE 400 PSIG, RATE .035 BPD/GPM, VOLUME 50 BBL/GAL
PROPOSED MAXIMUM DAILY INJECTION,	PRESSURE 400 PSIG, RATE .035 BPD/GPM, VOLUME 50 BBL/GAL
APPROVED MAXIMUM DAILY INJECTION, (TO BE FILLED IN BY STATE GEOLOGIST)	PRESSURE 400 PSIG, RATE .035 BPD/GPM, VOLUME 50 BBL/GAL

ESTIMATED FRACTURE PRESSURE GRADIENT OF INJECTION ZONE 0.4 PSI/FOOT

DESCRIBE THE SOURCE OF THE INJECTION FLUID Squirrel return water and rural water

NOTE ▶ SUBMIT AN APPROPRIATE ANALYSIS OF THE INJECTION FLUID. (SUBMIT ON SEPARATE SHEET)

DESCRIBE THE COMPATIBILITY OF THE PROPOSED INJECTION FLUID WITH THAT OF THE RECEIVING FORMATIONS, INCLUDIUNG TOTAL DISSOLVED SOLIDS COMPARISONS

There is currently no injection on the Benjamin lease, however there are active squirrel sandstone water floods, using return water mixed with rural water, on the adjacent leases to the north and south, specifically the Walton lease and the Belton Unit lease. The current and past operator(s) has used these injection fluids since the water flood began with no problems.

GIVE AN ACCURATE DESCRIPTION OF THE INJECTION ZONE INCLUDING LITHOLOGIC DESCRIPTIONS, GEOLOGIC NAME, THICKNESS, DEPTH, POROSITY, AND PERMEABILITY.

The depth of the squirrel sandstone on the Benjamin lease is approximately 550' to 600', with a thickness of approximately 50'. Based on the information received on the Belton Unit lease, which borders the Benjamin lease to the south, the average porosity of the squirrel sandstone is 22% with an average permeability of 270.8 millidarcy.

Please see the attached documents containing information on the lithologic description and geologic name of the injection zone.

GIVE AN ACCURATE DESCRIPTION OF THE CONFINING ZONES INCLUDING LITHOLOGIC DESCRIPTION, GEOLOGIC NAME, THICKNESS, DEPTH, POROSITY, AND PERMEABILITY.

The confining layers of the Squirrel Sandstone consist of two prominent shales which are the Labette shale, ranging from 30-50 feet thick located approximately at 525' and the Lagonda shale which ranges from 20-40 feet thick, located approximately at 600'. These shales have less than 5% porosity and contain very little to no permeability. According to "The Geology of North America, Vol. O-2, Hydrogeology, The Geological Society of America, 1988" written by Stanley N. Davis, "the intergranular permeability of shale is very low, as reflected in values given for samples 10 and 17 in Table 2. Most reliable laboratory measurements of the permeability of shale range between 10 -1 and 10 -4 millidarcys." Please see the attached Table 2 for further description.

SUBMIT ALL AVAILABLE LOGGING AND TESTING DATA ON THE WELL

GIVE A DETAILED DESCRIPTION OF ANY WELL NEEDING CORRECTIVE ACTION THAT PENETRATES THE INJECTION ZONE IN THE AREA OF REVIEW (1/2 MILE RADIUS AROUND WELL). INCLUDE THE REASON FOR AND PROPOSED CORRECTIVE ACTION.

No corrective action needed.

REMIT TWO (2) COPIES TO: GEOLOGICAL SURVEY PROGRAM, PO BOX 250, ROLLA, MO 65402 573/ 368-2143.
ONE (1) COPY WILL BE RETURNED.

TABLE 2. REPRESENTATIVE POROSITIES AND PERMEABILITIES OF SANDSTONE AND SHALE WITH VALUES FOR SALT AND COAL GIVEN FOR COMPARISON

Lithology	Formation or Geologic Age	Location	Porosity (%)	Permeability (md)	Field (F) or Laboratory (L)	Reference
1. Sandstone	Paskapoo	Alberta	—	4285	F	Garven (1982)
2. Sandstone	Paskapoo	Alberta	—	2640	F	Garven (1982)
3. Shale (fractured)	Paskapoo	Alberta	—	3230	F	Garven (1982)
4. Shale (fractured)	Paskapoo	Alberta	—	988	F	Garven (1982)
5. Mudstone	Cenozoic	North Dakota	—	4.6×10^{-2}	F	Rehm and others (1980)
6. Coal	Cenozoic	North Dakota	—	334	F	Rehm and others (1980)
7. Salt*	Permian	Texas	—	9.61×10^{-5} (horizontal)	—	INTERA (1986)
				9.61×10^{-6} (vertical)	—	
8. Shale*	Wolfcamp	Texas	—	9.61×10^{-5} (horizontal)	—	INTERA (1986)
				9.61×10^{-6} (vertical)	—	
9. Sandstone	——	——	—	0.15 (horizontal)	L	Young and others (1964)
				47.9 (vertical)	L	
10. Siltstone	——	——	—	2.4×10^{-7} (vertical)	L	Young and others (1964)
11. Sandstone	Wilcox	——	—	4740	F	Slaughter and others (1983)
12. Sandstone	Navajo	Utah	—	3.8	F	Woodward-Clyde (1984)
13. Sandstone	Dakota	Utah	—	10.9	F	Woodward-Clyde (1984)
14. Shale (fractured)†	Monterey	California	21	2690	L	Isherwood (1981)
15. Shale (fractured)	Green River	——	—	0.32	F	Isherwood (1981)
16. Shale (fractured, oil shale)	Green River	——	8	2.07	F	Isherwood (1981)
17. Shale	Graneros	Kansas	11.6	4.7×10^{-5}	L	Isherwood (1981)
18. Sandstone	Bradford	——	14.8	2.7	L	Davis and DeWiest (1966)
19. Sandstone	Berea	——	19	383	L	Davis and DeWiest (1966)
20. Sandstone	Repeto	——	19.1	36	L	Davis and DeWiest (1966)
21. Sandstone§	Cambrian	——	11.2	—	L	Manger (1963)
22. Sandstone‡	Pennsylvanian	——	17.4	—	L	Manger (1963)

*Values used in ground-water model.
†Average of 56 samples within an interval of 39 m. Porosity range 14% to 29%. Permeability range 89 md to 16,500 md.
§Average of 16 samples.
‡Average of 587 samples.

techniques may introduce large variations in the values reported in Table 2, these variations are still much smaller than the fundamental variations related to lithology and structure.

Studies of lightly cemented sandstones have shown that, like their nonindurated counterparts, grain size plays a dominant role in determining the permeability of the rock (Johnson and Greenkorn, 1963). Very roughly, the permeability increases as the square of the grain size. This simple relationship tends to break down as cementing and compaction decrease the pore size. For medium-grained sandstones with porosities between 0.15 and 0.25, a very rough correlation also exists between porosity and permeability. This correlation is actually quite good for some data sets, particularly if it is based on measurements of a single, poorly lithified sandstone unit that has a rather uniform grain size. An example of one of the numerous equations relating porosity to permeability is given below:

$$k = D^2\phi^{5.5/5.6C}$$

in which k is permeability, D is an effective grain size, ϕ is porosity, and C is a dimensionless constant. This equation was given by Dullien (1979). Most similar equations also show an exponential relation between porosity and permeability.

As the porosity of a sandstone decreases, particularly below 0.15, the permeability depends more on the presence of throughgoing secondary fractures rather than on the original porosity within the rock. As porosity decreases below 0.05, permeability is almost entirely dependent on the presence of fractures. Thus, in the case of a quartz sandstone with a brittle cement that is in a highly fractured zone, the present permeability may exceed the original permeability of the antecendent sand (Fig. 2). In general, the hydrogeology of all highly indurated sediments is profoundly affected by fractures, and the fractures account for very large local permeabilities (Huntoon, 1986; Huntoon and Lundy, 1979).

If a large number of permeability measurements are made of a single stratigraphic unit, the resulting values appear to have a log-normal statistical distribution (Fig. 3; Davis, 1969). The ex-

Re: Benjamin Lease Injection Well Applications

In reference to your concern about the confining layers of the Squirrel sandstone in the Belton area I wish to present the following information concerning the reservoir at Belton which has become known from our operations and as provided by our consulting engineer.

The reservoir(s) in the Belton are actually a stacked series of sand bodies, point bars, consisting of the Englevale sandstone in the Labette shale and three or more sand zones in the Squirrel section of the Cherokee Group. The Fort Scott section is missing, evidently removed by erosion during the time of the Englevale development. In some cases the Englevale is in contact with the Squirrel and may appear as one vertically continuous reservoir. Consequently, the upper boundary of the Englevale is the Labette shale – the upper confining layer.

The Squirrel sandstones exhibit lateral facies changes from sandstone to shaly sand to sandy shale to shale. Vertically, the change from sand to shale may be very abrupt, especially in the base of the paleo-channel. The confining layers below the Squirrel sandstone will be shale of the Lagonda formation of the Cherokee.

We are a little concerned about applying limitations to porosity values of the confining zones since shale is typically exhibits porosity of about 20%, but due to their sedimentary nature they are impervious, thus they provide an excellent seal. Our concern in developing an injection program is for proper casing and cementing design and wellbore stimulation within zone. At Belton, our experience is that fractures are not going "out of zone". This is because the boundary layers are impervious and fractures are created in sandstone at a lower pressure than in shale, thus staying within the stimulated zone. That is, the fracture treating pressures in the sandstone are not sufficient to fracture the overlying shale. Waterflood operations will never experience pressures utilized during hydraulic fracturing, thus we are highly confident of the geologic integrity.

Our consulting engineer reviewed the policy of several other oil producing states and could not find any concern about confining zones in their secondary recovery regulations. In addition, he reviewed several water flooding engineering texts and could find no mention of consideration of confining zones in any of the texts.

With the many years of successful operations in Western Missouri and adjacent areas of Kansas, where hundreds of water floods have been performed in the Squirrel sandstone, the confining shales have proven to be an adequate seal for waterflood operations. Thus, it is our request that this aspect of the approval process be accepted, based upon the above stated reasons and, especially, the history of successful operations within this scenario.

Very truly yours,

Bradley Kramer

minimum stress at the borehole, and must also overcome the tensile strength of the rock. This can be expressed as follows:

$$(P_i)_v = 3\,\bar{\sigma}_{h_2} - \bar{\sigma}_{h_1} + S_h + P \qquad (5)$$

where:

$(P_i)_v$ = borehole pressure required to initiate vertical fracture
$\bar{\sigma}_{h_1}$ = maximum principal horizontal matrix stress
$\bar{\sigma}_{h_2}$ = minimum principal horizontal matrix stress
S_h = horizontal tensile strength of rock
P = formation pore pressure

Penetrating Fluid Reduces Breakdown Pressure—A penetrating fluid increases the area over which pressurized fluid contacts the formation and can reduce the pressure necessary to initiate fracturing.

Laboratory and theoretical work by Fairhurst and Haimson[21] provides a basis for estimation of the magnitude of reduction in openhole. Generally reduction may be on the order of 25 to 40% in openhole.

Perforation Density and Orientation—Recent laboratory work in cased hole shows that breakdown or frac initiation pressure is affected by the number and arrangement of perforations.[22]

The existence of casing and the arrangement of perforations have little effect on created fracture orientation, but breakdown pressure is reduced by increased number of perforations. The practice of perforating with all shots in a vertical line on one side of the casing, Figure 8-6 significantly increases breakdown pressure if the perforations happen to be oriented 90° to the azimuth of the vertical fracture plane. Orientation of perforations does not affect azimuth of the vertical fracture however.

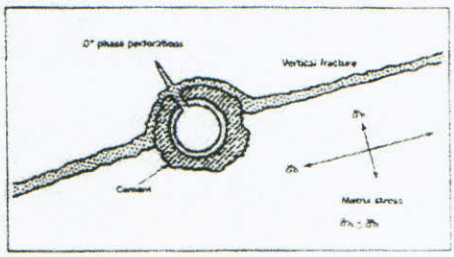

FIG. 8-6—*Orientation of perforation vs. least horizontal matrix stress. Condition resulting in highest breakdown pressure.*

Fracture Propagation

Once the fracture has been created and invaded by pressured fluid, the stress concentration near the wellbore is reduced, and the hydraulic pressure required to extend the fracture must merely overcome the component of the undisturbed stress field normal to the plane of the fracture.

Measuring Propagation Pressure and Frac Gradient—The fracture propagation pressure (and frac gradient) can be obtained during the fracing operation by recording the wellhead pressure immediately after the pumps are shut down following injection into the fracture (Figure 8-7). Since the frac gradient is increased by increased pore pressure, this measurement should be made before the pore pressure is significantly raised by the injected frac fluid.

Wellhead instantaneous shut-in pressure, corrected to the hole bottom by adding the hydrostatic pressure of the wellbore fluid column, is the *fracture propagation pressure. Fracture gradient* is the fracture propagation pressure divided by the formation depth.

Measuring Rock Matrix Stress—The minimum horizontal rock matrix stress is then:

$\bar{\sigma}_{h_1}$ = propagation pressure − pore pressure

This stress is of particular interest because it is the stress which propping agents must withstand in order to hold the fracture open. In actual practice pore pressure can be equated to static reservoir pressure provided fracture propagation pressure is measured before significant frac fluid is injected to raise the pore pressure level near the wellbore.

It should be noted that proppant in the critical area near the wellbore is subjected to more stress than that further away due to lower pore pressure near the wellbore in the producing process, Figure 8-8. This effect may be significant at high drawdown pressures.

Fracture Orientation

Fracture Propagates Perpendicular to Smallest Stress—Rocks fracture in a plane perpendicular to

Proposed Injection Volumes

Injection volumes are determined by using analogy from previous and current squirrel sandstone water floods that contain similar reservoir characteristics. In the case of the Benjamin lease we plan to inject 1 barrel of water for every 1 net foot of oil bearing sandstone, assuming this rate does not exceed he maximum approved injection pressure. Depending on the duration and impact of the surrounding wells, some injection wells may ultimately inject up to 3 barrels of water for every 1 net foot of oil bearing sandstone.

Due to the permeability variance of the reservoir we typically will not exceed 15' of perforations per water injection well.

Example;

Year 1

15' of perforations x 1 bbl/ft = 15 BPD injection rate

Year 2

15' of perforations x 2 bbl/ft = 30 BPD injection rate

Year 3 through Year 20

15' of perforations x 3 bbl/ft = 45 BPD injection rate

We typically do not exceed 3 bbl/ft injection rate per day per well, which is why we are requesting 50 BPD rate.

Benjamin Lease, Cass County, Missouri

Re: Closure Pressure

Attached is a reproduction from *"Production Operations, Vol. 2"* by Allen and Roberts describing the fracturing pressures in a reservoir.

The fracture propagation pressure is approximately the same as the closure pressure, although slightly higher. This difference is less significant in low pressure reservoirs such as the ones in the Cherokee Basin, consequently, they are considered to be the same. The fracture propagation pressure is the same as the instantaneous shut-in pressure (ISIP) experienced upon cessation of a hydraulic fracture treatment. The ISIP from a fracture procedure is the surface pressure measurement. Bottom-hole ISIP must be calculated by adding the surface ISIP and the product of the depth to mid-perforations (feet) and the pressure gradient of the fluid in the wellbore (psi/foot). For fresh water the fluid gradient is 0.434 psi/foot. Since the fluid in fracture operations is more dense than fresh water most engineers estimate the bottom-hole ISIP with a higher gradient. The state of Oklahoma uses a gradient of 0.50 psi/foot.

Listed below is a group of wells ISIP (Initial Shut In Pressure) that were recently stimulated on the Benjamin Lease in Section 9, Township 46N, Range 33 West, Cass County, Missouri. Please see the attached "fracture treatment reports" for verification of ISIP in the following wells.

Lease	Well	ISIP (Surface)
Benjamin	KR-10	575#
Benjamin	KR-14	500#
Benjamin	KR-15	525#
Benjamin	KR-20	500#
Benjamin	KR-26	450#
Benjamin	KR-27	550#
Benjamin	KR-29	475#
Benjamin	KR-31	450#
Benjamin	KR-33	550#

The fracture propagation pressure is the pressure in which the aperture of the existing fractures can begin to be opened. An increase in injection rate is noted at this point on injection step-rate tests. At injection pressures at, or slightly above, the ISIP, the fractures in the immediate vicinity of the wellbore (inches) may be affected but not into the reservoir significantly. In actual injection operations of a waterflood at ISIP, fractures wouldn't be created beyond the region adjacent to the wellbore because of; 1) fluid leak-off into the formation, 2) the injection of a low viscosity fluid, and 3) the extremely low injection rates - far less than what is necessary to create a fracture.

CONSOLIDATED
Oil Well Services, LLC

PO Box 884, Chanute, KS 66720
620-431-9210 or 800-467-8676

1ST well

TICKET NUMBER 54764
FIELD TICKET REF # 48125
LOCATION Thayer
FOREMAN Brett Bustos

TREATMENT REPORT
FRAC & ACID

DATE	CUSTOMER #	WELL NAME & NUMBER	SECTION	TOWNSHIP	RANGE	COUNTY
12-27-12		Benjamin KR-10	9	46N	33W	Cass

CUSTOMER: S & B Operating
MAILING ADDRESS:
CITY | STATE | ZIP CODE:

TRUCK #	DRIVER	TRUCK #	DRIVER
524	Trampis	680T221	Stan
458	Tim	489T119	Dwayne
582	Daniel		
618T95	Jay		
619T91	George		
679T102	Junior		

WELL DATA

CASING SIZE	TOTAL DEPTH
CASING WEIGHT	PLUG DEPTH
TUBING SIZE 2 7/8 EUE	PACKER DEPTH
TUBING WEIGHT	OPEN HOLE
PERFS & FORMATION	
555-68-581-91	(49) Squirrel(s)

TYPE OF TREATMENT
Acid spot + frac

CHEMICALS

KCL sub Biocide + Breaker	
Acid inhibitor - Stim Oil	

STAGE	BBL'S PUMPED	INJ RATE	PROPPANT PPG	SAND / STAGE	PSI	
PAD	20	13-16				BREAKDOWN 1000
16-30		16		500#		START PRESSURE
12-20		16				END PRESSURE
12-20		16		1,000#		BALL OFF PRESS
12-20 (8+7)	balls					ROCK SALT PRESS
12-20						ISIP 575
12-20				1,500#		5 MIN
12-20 (5)+(5)	balls					10 MIN
12-20	(25)					15 MIN
12-20				1,000#		MIN RATE
FLUSH CASING	5					MAX RATE
Release balls to T.D.			TOTAL	4,000#		DISPLACEMENT 3.5
OVERFLUSH	10	16	SAND			
TOTAL BBLS	130					

REMARKS: held safety-procedure meeting before fracs

Spotted 100 gal-15% HCL acid on perfs / load 35 balls

location 10:00AM - 10:45AM 120 miles

AUTHORIZATION _____ TITLE _____ DATE 12-27-12

Terms and Conditions are printed on reverse side.

CONSOLIDATED
Oil Well Services, LLC

PO Box 884, Chanute, KS 66720
620-431-9210 or 800-467-8676

2nd well

TICKET NUMBER 54765
FIELD TICKET REF # 48125
LOCATION Thayer
FOREMAN Brett Busby

TREATMENT REPORT
FRAC & ACID

DATE	CUSTOMER #	WELL NAME & NUMBER	SECTION	TOWNSHIP	RANGE	COUNTY
12-27-12		Benjamin KR-14	9	46N	33W	Cass

CUSTOMER: S+B Operating

MAILING ADDRESS:

CITY	STATE	ZIP CODE

TRUCK #	DRIVER	TRUCK #	DRIVER
524	Trampis		
458	Tim		
582	Daniel		
618T95	Jay		

WELL DATA

CASING SIZE	TOTAL DEPTH
CASING WEIGHT	PLUG DEPTH
TUBING SIZE 2 7/8 8EUE	PACKER DEPTH
TUBING WEIGHT	OPEN HOLE
PERFS & FORMATION	
564-74 (38)	Squirrel(S)
580-88	

TYPE OF TREATMENT

Acid spot + frac

CHEMICALS

KCLSUB - Biocide + Breaker
Acid - inhibitor - Stim Oil

STAGE	BBL'S PUMPED	INJ RATE	PROPPANT PPG	SAND / STAGE	PSI	
PAD	20	15.5			1100	BREAKDOWN 1100
16-30		15.5		500#		START PRESSURE
12-20				1000#		END PRESSURE
12-20 (5) + (5)						BALL OFF PRESS
12-20						ROCK SALT PRESS
12-20						ISIP 500
12-20				1,000#		5 MIN
12-20 (3) = (13) balls					1700	10 MIN
12-20						15 MIN
12-20				1,000#		MIN RATE
FLUSH CASING	5					MAX RATE
Release balls to T.D.			TOTAL	3,500#		DISPLACEMENT 3.4
OVERFLUSH	10	15.5	SAND		1100	
TOTAL BBLS	135					

REMARKS:

Spotted 100 gal - 15% HCL acid on perfs

location 10:45AM - 11:30AM 120: miles

AUTHORIZATION _____ TITLE _____ DATE 12-27-12

Terms and Conditions are printed on reverse side.

CONSOLIDATED
Oil Well Services, LLC

PO Box 884, Chanute, KS 66720
620-431-9210 or 800-467-8676

3RD well

TICKET NUMBER 54766
FIELD TICKET REF # 48125
LOCATION Thayer
FOREMAN Brett Busby

TREATMENT REPORT
FRAC & ACID

DATE	CUSTOMER #	WELL NAME & NUMBER	SECTION	TOWNSHIP	RANGE	COUNTY
12-27-12		Benjamin RR-15	9	46N	33W	Cass

CUSTOMER: S+B Operating
MAILING ADDRESS:
CITY | STATE | ZIP CODE:

TRUCK #	DRIVER	TRUCK #	DRIVER
524	Trampis		
458	Jim		
582	Daniel		
619T91	George		

WELL DATA

CASING SIZE	TOTAL DEPTH
CASING WEIGHT	PLUG DEPTH
TUBING SIZE 2 1/8 STUE	PACKER DEPTH
TUBING WEIGHT	OPEN HOLE
PERFS & FORMATION	
591-601 (21)	Squirrel

TYPE OF TREATMENT
Acid spot + frac

CHEMICALS

Kasub Biocide - Breaker	
Acid - inhibitor - Stim oil	

STAGE	BBL'S PUMPED	INJ RATE	PROPPANT PPG	SAND / STAGE	PSI	
PAD	20	15.5				BREAKDOWN 1100
16-30		15.5		500#		START PRESSURE
12-20		15.5				END PRESSURE
12-20		15.5		1,000#		BALL OFF PRESS
12-20 (4) + (3)						ROCK SALT PRESS
12-20						ISIP 525
12-20				500#		5 MIN
12-20 + (3) = (10) balls						10 MIN
12-20						15 MIN
12-20				1,000#		MIN RATE
FLUSH CASING	5					MAX RATE
Release balls to T.D.			TOTAL	3,000#		DISPLACEMENT 3.5
OVERFLUSH	10	15.5	SAND			
TOTAL BBLS						

REMARKS:

Spotted 100 gal - 15% HCL acid on perfs

location 11:30AM - 12:00PM 120 miles

AUTHORIZATION _____ **TITLE** _____ **DATE** 12-27-12

Terms and Conditions are printed on reverse side.

CONSOLIDATED
Oil Well Services, LLC

PO Box 884, Chanute, KS 66720
620-431-9210 or 800-467-8676

4th well

TICKET NUMBER 54767
FIELD TICKET REF # 48125
LOCATION Thayer
FOREMAN Brett Busby

TREATMENT REPORT
FRAC & ACID

DATE	CUSTOMER #	WELL NAME & NUMBER	SECTION	TOWNSHIP	RANGE	COUNTY
12-27-12		Benjamin KR-20	9	46N	33W	Cass

CUSTOMER: S+B Operating
MAILING ADDRESS:
CITY | STATE | ZIP CODE:

TRUCK #	DRIVER	TRUCK #	DRIVER
524	Trampis		
458	Tim		
582	Daniel		
680T221	Stan		

WELL DATA

CASING SIZE	TOTAL DEPTH
CASING WEIGHT	PLUG DEPTH
TUBING SIZE 2 7/8 SEUE	PACKER DEPTH
TUBING WEIGHT	OPEN HOLE
PERFS & FORMATION	
611-15 (30)	Squirrel

TYPE OF TREATMENT
Acid spot + frac

CHEMICALS

KCLSUB - Biocide	- Breaker
Acid - inhibitor	- Stim Oil

STAGE	BBL'S PUMPED	INJ RATE	PROPPANT PPG	SAND / STAGE	PSI	
PAD	20	15.5			1150	BREAKDOWN 1200
16-30		15.5		500#		START PRESSURE
12-20		15.5			1200	END PRESSURE
12-20				1,000#	1150	BALL OFF PRESS
12-20 (5) + (5) balls						ROCK SALT PRESS
12-20						ISIP 500
12-20				1,000#		5 MIN
12-20 (3) + (2)					1900	10 MIN
12-20	= (15)					15 MIN
12-20				1,000#		MIN RATE
FLUSH CASING-	5					MAX RATE
Release balls to T.D.			TOTAL	3,500#		DISPLACEMENT 3.5
OVERFLUSH	10	15.5	SAND		1200	
TOTAL BBLS	138					

REMARKS:

Spotted 100 gal-15% HCL acid on perfs

location 12:00PM - 12:45PM 120 miles

AUTHORIZATION _____ TITLE _____ DATE 12-27-12

Terms and Conditions are printed on reverse side.

CONSOLIDATED
Oil Well Services, LLC

PO Box 884, Chanute, KS 66720
620-431-9210 or 800-467-8676

8th well

TICKET NUMBER 54768
FIELD TICKET REF # 48125
LOCATION Thayer
FOREMAN Brett Bustos

TREATMENT REPORT
FRAC & ACID

DATE	CUSTOMER #	WELL NAME & NUMBER	SECTION	TOWNSHIP	RANGE	COUNTY
12-27-12		Benjamin KR-26	9	46N	33W	Cass

CUSTOMER: S+B Operating
MAILING ADDRESS:
CITY | STATE | ZIP CODE:

TRUCK #	DRIVER	TRUCK #	DRIVER
524	Trampis		
458	Jim		
522	Daniel		
680T221	Stan		

WELL DATA

CASING SIZE	TOTAL DEPTH
CASING WEIGHT	PLUG DEPTH
TUBING SIZE 2 7/8 EUE	PACKER DEPTH
TUBING WEIGHT	OPEN HOLE
PERFS & FORMATION	
545-53 (51)	Squirrels
573-89	

TYPE OF TREATMENT
Acid spot + Frac

CHEMICALS
KCLSUB - Biocide - Breaker
Acid - inhibitor - Slimoil

STAGE	BBL'S PUMPED	INJ RATE	PROPPANT PPG	SAND / STAGE	PSI	
PAD	20	15.2			700	BREAKDOWN 1200
16-30		15.5		500#		START PRESSURE
12-20						END PRESSURE
12-20				1,000#	750	BALL OFF PRESS
12-20 (10) + (5)					1000	ROCK SALT PRESS
12-20						ISIP 450
12-20				1000#		5 MIN
12-20 (5) + (5)				500#		10 MIN
12-20 + (3)	=22				1800	15 MIN
12-20				1,000#		MIN RATE
FLUSH CASING	5				1500	MAX RATE
Release balls to FD			TOTAL	4,000 #		DISPLACEMENT 3,4
OVERFLUSH	10	15.5	SAND		750	
TOTAL BBLS	145					

REMARKS:

Spotted 100 gal. -15% HCL acid on perfs

location 3:00 PM - 4:00 PM 120: miles

AUTHORIZATION _____ TITLE _____ DATE 12-27-12

Terms and Conditions are printed on reverse side.

CONSOLIDATED
Oil Well Services, LLC

PO Box 884, Chanute, KS 66720
620-431-9210 or 800-467-8676

5TH well

TICKET NUMBER 54769
FIELD TICKET REF # 48125
LOCATION Thayer
FOREMAN Brett Busby

TREATMENT REPORT
FRAC & ACID

DATE	CUSTOMER #	WELL NAME & NUMBER	SECTION	TOWNSHIP	RANGE	COUNTY
12-27-12		Benjamin RR-29	9	46N	33W	Cass

CUSTOMER: S+B Operating
MAILING ADDRESS:
CITY | STATE | ZIP CODE:

TRUCK #	DRIVER	TRUCK #	DRIVER
524	Trampis		
482	Mark		
582	Daniel		

WELL DATA

CASING SIZE	TOTAL DEPTH
CASING WEIGHT	PLUG DEPTH
TUBING SIZE 2 7/8 EUE	PACKER DEPTH
TUBING WEIGHT	OPEN HOLE
PERFS & FORMATION	
585-605 (42)	Squirrel

TYPE OF TREATMENT
Acidspot + Frac

CHEMICALS

KCLSUB - Biocide - Breaker	
Acid - inhibitor - Jimoil	

STAGE	BBL'S PUMPED	INJ RATE	PROPPANT PPG	SAND / STAGE	PSI	
PAD	20	15.5			850	BREAKDOWN 1100
16-30		15.5		500#		START PRESSURE
12-20		15.5				END PRESSURE
12-20				1,000#		BALL OFF PRESS
12-20 (8) + (7)						ROCK SALT PRESS
12-20						ISIP 475
12-20				1,000#		5 MIN
12-20 (5) + (5)						10 MIN
12-20 + (5)	30			500#	1400	15 MIN
12-20						MIN RATE
FLUSH CASING	5			1,000#		MAX RATE
Release balls to T.D.			TOTAL	4,000#		DISPLACEMENT 3.5
OVERFLUSH	10	15.5	SAND		700	
TOTAL BBLS	140					

REMARKS:

Spotted 100 gal 15% HCL acid on perfs

location 1:00PM – 1:30PM 120 miles

AUTHORIZATION _____ **TITLE** _____ **DATE** 12-27-12

Terms and Conditions are printed on reverse side.

CONSOLIDATED
Oil Well Services, LLC

PO Box 884, Chanute, KS 66720
620-431-9210 or 800-467-8676

6TH well

TICKET NUMBER 54770
FIELD TICKET REF # 481125
LOCATION Thayer
FOREMAN Brett Busby

TREATMENT REPORT
FRAC & ACID

DATE	CUSTOMER #	WELL NAME & NUMBER	SECTION	TOWNSHIP	RANGE	COUNTY
12-27-12		Benjamin KR-33				Cass

CUSTOMER: S+B Operating
MAILING ADDRESS:
CITY | STATE | ZIP CODE:

TRUCK #	DRIVER	TRUCK #	DRIVER
524	Icompis		
458	Tim		
582	Daniel		
618T95	Jay		

WELL DATA

CASING SIZE	TOTAL DEPTH
CASING WEIGHT	PLUG DEPTH
TUBING SIZE	PACKER DEPTH
TUBING WEIGHT	OPEN HOLE
PERFS & FORMATION	
575-95 (42)	Squirrel

TYPE OF TREATMENT: Acid pot + Frac

CHEMICALS: KCLSUB-Biocide-

STAGE	BBL'S PUMPED	INJ RATE	PROPPANT PPG	SAND / STAGE	PSI	
PAD	20	15.5				BREAKDOWN 1000
16-30		15.5		500#		START PRESSURE
12-20						END PRESSURE
12-20				1,000#		BALL OFF PRESS
12-20 (8+7)						ROCK SALT PRESS
12-20						ISIP 550
12-20						5 MIN
12-20				1,000#		10 MIN
12-20 (5+5+5=30)				500#		15 MIN
12-20 +5				1,000#		MIN RATE
FLUSH CASING	5					MAX RATE
Release balls to T.D.			TOTAL	4,000#		DISPLACEMENT 3.5
OVERFLUSH	10	15.5	SAND			
TOTAL BBLS						

REMARKS:

Spotted 100 gal-15% HCL acid on perfs

Location 1:40PM - 2:00PM 120 miles

AUTHORIZATION _____ TITLE _____ DATE 12-27-12

Terms and Conditions are printed on reverse side.

CONSOLIDATED
Oil Well Services, LLC

PO Box 884, Chanute, KS 66720
620-431-9210 or 800-467-8676

7TH well

TICKET NUMBER 54771
FIELD TICKET REF # 48125
LOCATION Thayer
FOREMAN Brett Busby

TREATMENT REPORT
FRAC & ACID

DATE	CUSTOMER #	WELL NAME & NUMBER	SECTION	TOWNSHIP	RANGE	COUNTY
12-27-12		Benjamin KR-27	9	46N	33W	Cass

CUSTOMER: S & B Operating
MAILING ADDRESS:
CITY | STATE | ZIP CODE:

TRUCK #	DRIVER	TRUCK #	DRIVER
524	Trampis		
482	Mark		
582	Daniel		
619T91	George		

WELL DATA

CASING SIZE	TOTAL DEPTH
CASING WEIGHT	PLUG DEPTH
TUBING SIZE 2 7/8 EUE	PACKER DEPTH
TUBING WEIGHT	OPEN HOLE
PERFS & FORMATION	
578-85 (24)	Squirrel
601-65	

TYPE OF TREATMENT
Acidspot + Frac

CHEMICALS

KCLSUB - Biocide	- Breaker
Acid - inhibitor	- Slim Oil

STAGE	BBL'S PUMPED	INJ RATE	PROPPANT PPG	SAND / STAGE	PSI	
PAD	20	15.5				BREAKDOWN 1200
16-30		15.5		500#		START PRESSURE
12-20						END PRESSURE
12-20				1,000#		BALL OFF PRESS
12-20 (4) + (4)						ROCK SALT PRESS
12-20						ISIP 550
12-20				500#		5 MIN
12-20 + (2)	= 10					10 MIN
12-20						15 MIN
12-20				1,000#		MIN RATE
FLUSH CASING	5					MAX RATE
Release balls to T.D.			TOTAL	3,000#		DISPLACEMENT 3.5
OVERFLUSH	10	15.5	SAND			
TOTAL BBLS	135					

REMARKS:

Spotted 100 gal - 15% HCL acid on perfs

Location 2:15PM - 3:10PM 120 miles

AUTHORIZATION _____ **TITLE** _____ **DATE** 12-27-12

Terms and Conditions are printed on reverse side.

CONSOLIDATED
Oil Well Services, LLC

PO Box 884, Chanute, KS 66720
620-431-9210 or 800-467-8676

9th well

TICKET NUMBER 54772
FIELD TICKET REF # 48125
LOCATION Thayer
FOREMAN Brett Busby

TREATMENT REPORT
FRAC & ACID

DATE	CUSTOMER #	WELL NAME & NUMBER	SECTION	TOWNSHIP	RANGE	COUNTY
12-27-12		Benjamin KR-31	9	46N	33W	Cass

CUSTOMER: S & B Operating
MAILING ADDRESS:
CITY | STATE | ZIP CODE:

TRUCK #	DRIVER	TRUCK #	DRIVER
524	Trampis		
482	Mark		
582	Daniel		
679T102	Junior		

WELL DATA

CASING SIZE	TOTAL DEPTH
CASING WEIGHT	PLUG DEPTH
TUBING SIZE 2 7/8 EUE	PACKER DEPTH
TUBING WEIGHT	OPEN HOLE
PERFS & FORMATION	
552-62 (55)	Squirrels
571-97	

TYPE OF TREATMENT
Acidspot + Frac

CHEMICALS

KCl SUB - Biocide	- Breaker
Acid - inhibitor	+ Stim Oil

STAGE	BBL'S PUMPED	INJ RATE	PROPPANT PPG	SAND / STAGE	PSI	
PAD	20	15.8				BREAKDOWN 900
16-30		15.8	.5-1.0	500#		START PRESSURE
12-20 Balls ↓		15.8	1.0			END PRESSURE
12-20			2.0	1000#		BALL OFF PRESS
12-20 (10 + 5)	+ 5		.5-1.5	↓		ROCK SALT PRESS
12-20			1.0	↓		ISIP 450
12-20			2.0	1500#		~~5 MIN~~
12-20 (5)	+ (3) + (2)		.5	↓		10 MIN
12-20			1.0	↓		15 MIN
12-20	(30)		2.0	1,500#		MIN RATE
FLUSH CASING	5					MAX RATE
Release balls to	T.D.		TOTAL	4,500 #		DISPLACEMENT 3.5
OVER FLUSH	10		SAND			
TOTAL BBLS	165					

REMARKS:

Spotted 100 gal-15% HCL acid on perfs

location 4:00PM – 5:00PM 120: miles

AUTHORIZATION _____ **TITLE** _____ **DATE** 12-27-12

Terms and Conditions are printed on reverse side.

STATE OF MISSOURI
MISSOURI DEPARTMENT OF NATURAL RESOURCES
GEOLOGICAL SURVEY PROGRAM

INJECTION WELL LOCATION PLAT

FORM OGC-41

RECEIVED
JUN 13 2013
Mo Oil & Gas Council

OWNER'S NAME
S & B Operating, LLC

LEASE NAME
Benjamin KRI-12

COUNTY
Cass

WELL LOCATION (GIVE FOOTAGE FROM SECTION LINES)
1650 ft. from ☑ North ☐ South section line 1320 ft. from ☑ East ☐ West section line

WELL LOCATION
Sec. 9 Township 46 North Range 33 ☐ East ☑ West

LATITUDE
N38° 49' 36.66"

LONGITUDE
W94° 34' 14.62"

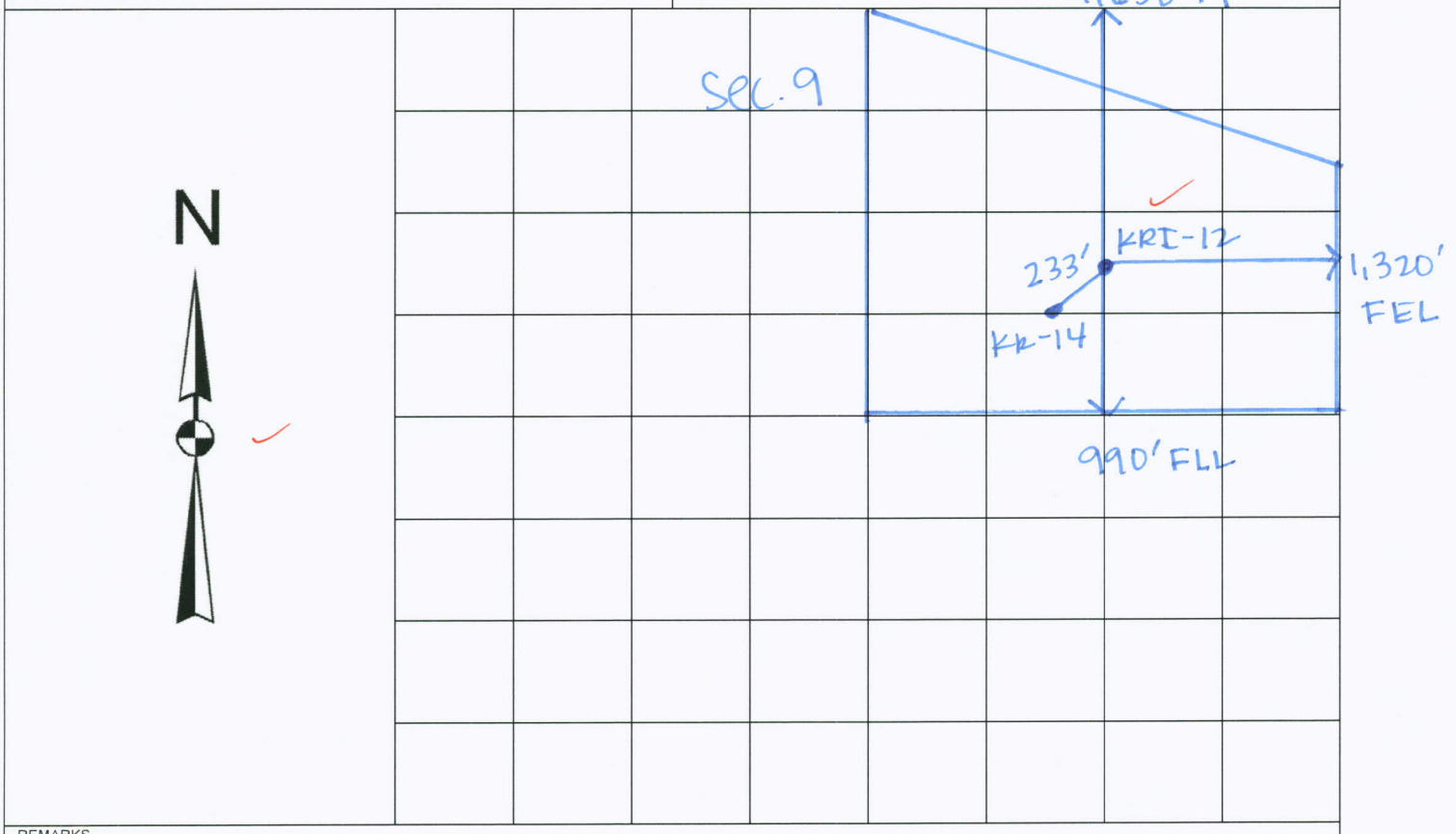

REMARKS
Plat MapScale - 1 Square = 660 feet

INSTRUCTIONS

On the above plat, show distance of the proposed well from the two nearest section lines, the nearest lease line, and from the nearest well on the same lease completed in or drilling to the same reservoir. Do not confuse survey lines with lease lines. See rule 10 CSR 50-2.030 for survey requirements. Lease lines must be marked.

This is to certify that I have executed a survey to accurately locate oil and gas wells in accordance with 10 CSR 50-2.030 and that the results are correctly shown on the above plat.

REGISTERED LAND SURVEY

NUMBER

REMIT ONE (1) COPY TO: STATE OIL AND GAS COUNCIL, PO BOX 250, ROLLA, MO 65402 573-368-2143.

Missouri Department of Natural Resources
Geographic Information Systems

Check Location

Select a coordinate format, enter a pair of coordinates in the boxes below it, and then press the SUBMIT button. Please be patient while your information is retrieved. Your coordinates will be converted to the other formats, the information on the right-hand side of the page will be filled in based on your coordinates, and a map will be generated. NOTE: All coordinates must use the North American Datum of 1983 (NAD83).

Submit

Universal Transverse Mercator [Zone 15 North]

Easting
363653.3600240237 meters
Northing
4298734.151333161 meters

Decimal Degrees

Latitude
38.82685 °
Longitude
-94.57072777777778 °

Degrees, Minutes and Seconds

Latitude Degrees
38 °
Latitude Minutes
49 '
Latitude Seconds
36.66 "
Longitude Degrees
-94 °
Longitude Minutes
34 '
Longitude Seconds
14.62 "

UTM Zone 15N [Easting, Northing]	[363653.3, 4298734.1] meters
Decimal Degrees [Lat, Lon]	[38.82685°, -94.570728°]
Deg, Min, Sec [Lat, Lon]	[38° 49' 36.6", -94° 34' 14.6"]
County Name	Cass
County FIPS Code	037
Legal Description	Section 09 T46N R33W
Municipality	Belton
House District	56
Senate District	31
Congressional District	4
MoDNR Region	Kansas City Regional Office
USGS 1:24,000 Quadrangle	Belton [38094-G5]
8 Digit Watershed	10300101 [Lower Missouri-Crooked]
10 Digit Watershed	1030010101 [Blue River]
12 Digit Watershed	103001010104 [Camp Branch-Blue River]
Special Well Drilling Area	Area 2
Ecological Drainage Unit	Central Plains/Blackwater/Lamine
Level III Ecoregion	Central Irregular Plains
Query Time	5.953 s

Rows with red text indicate that the input location is too close to a boundary to produce reliable results.

NOTE: A result of 'NO VALUE' is usually an indication that no data was found for the location. For example, not every point in Missouri will lie within a municipal boundary, so some will result in a 'NO VALUE'. If 'County Name' results in 'NO VALUE', your point probably lies outside the state.

Metadata

- Interstate Highways
- US Highways
- State Highways
- Railroad
- Major and Minor Roads
- County Boundary
- Lakes
- Major Rivers
- Rivers and Streams
- Missouri River
- Mississippi River
- Municipal

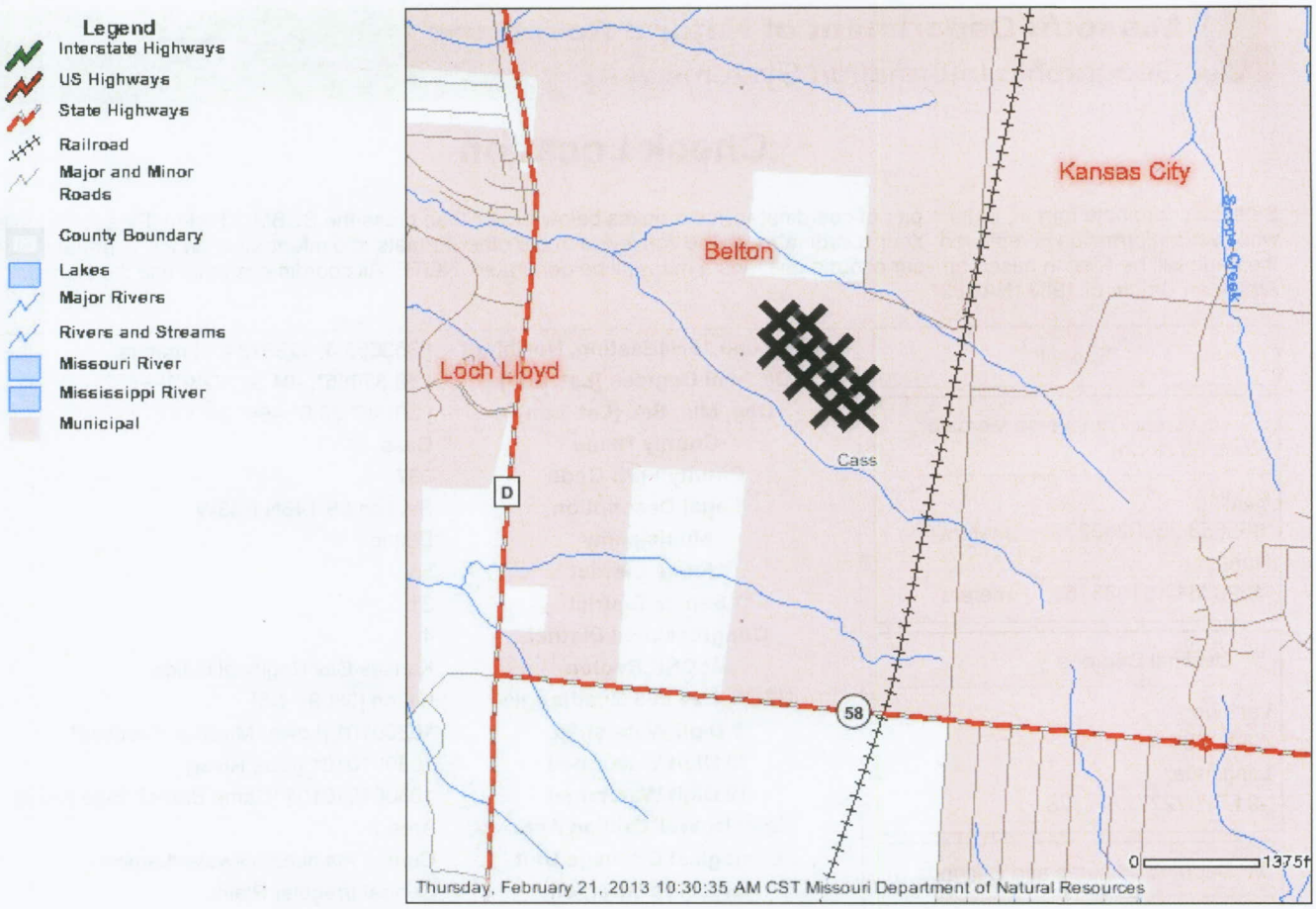

View Scale 1:24,000

DISCLAIMER: Although this map has been compiled by the Missouri Department of Natural Resources, no warranty, expressed or implied, is made by the department as to the data and related materials. The act of distribution shall not constitute any such warranty, and no responsibility is assumed by the department in the use of these data or related materials.

Missouri Department of Natural Resources

P.O. Box 176, Jefferson City, MO 65102
800-361-4827 / 573-751-3443
E-mail: contact@dnr.mo.gov

DeLORME
XMap® 7
E 165TH ST
STATE HIGHWAY D
FAIRWAY RD
166 ST
166TH CT
E 166TH CT
166TH ST
S SR D
COUNTRY CLUB DR
E LOCH LLOYD PKWY
HIGHLAND RIDGE
HIGHLAND RIDGE DR
LOCH LLOYD PKWY
VILLAGE DR
MEADOW LN
HEATHER LN
MAX CT
MCDONALD LN
1/2 Mile Radius
From All Benjamin
Injectors
W MARKEY RD
BALES AVE
BALES RD
Benjamin Lease
Belton Unit Lease
S PROSPECT AVE
SEABEE DR
KENNETH LN
CHERRY HILL CT
FARM PL
TANNER CIR
SWEET CHERRY PL
SANDRA LN
RED CT
TANNER RD
ROYAL CT
SUNSET CT
ASKEW AVE
ORCHARD DR
KIMBERLY DR
Beltons Country Mkt
Snead's Bar B-Q
E 171ST ST
E OIL WELL DR
W NORTH AVE
Belton Quick Break
Data use subject to license.
© DeLorme. XMap® 7.
www.delorme.com
MN (2.0° E)
0
500
1000
1500
ft
Data Zoom 14-4

AREA OF REVIEW WELLS (1/2 MILE RADIUS AROUND WELL) THAT PENETRATE THE INJECTION INTERVAL

INSTRUCTIONS

In the grid below, place the descriptions of area of review wells (1/2 mile radius around well) of public record that penetrate the proposed injection zone. Complete the following: lease name, well number, location, owner, depth in feet, type of well (Oil = O, Gas = G, Water = W, Injection = I, Strat Test = S, Unknown = U, Other - specify), date spudded, date completed, and construction of the well. Give a brief but accurate description of the well's construction including all plugging and/or completion of information, detailing the cement, casing, and subsurface casing information.

LEASE	WELL NO.	LOCATION	OWNER	DEPTH	TYPE	DATE SPUDDED	DATE COMPLETED	CONSTRUCTION
Belton Unit	AD-4	220 FROM (N)(S) SEC LINE 4255 FROM (E)(W) SEC LINE SEC. 9 T. 46 N.R. 33W	K.R.E.D.	666'	O	07/14/1987	07/16/1987	4 1/2" casing cemented to surface 2 3/8" tubing 3/4" rods and insert pump Plugged 7/19/2018
Belton Unit	AD-5	220 FROM (N)(S) SEC LINE 4716 FROM (E)(W) SEC LINE SEC. 9 T. 46 N.R. 33W	K.R.E.D	679'	O	06/21/1987	06/25/1987	4 1/2" casing cemented to surface 2 3/8" tubing 3/4" rods and insert pump Plugged 7/19/2018
Belton Unit	AD-6	209 FROM (N)(S) SEC LINE 5186 FROM (E)(W) SEC LINE SEC. 9 T. 46 N.R. 33W	K.R.E.D	708'	O	01/31/2008	02/19/2008	4 1/2" casing cemented to surface 2 3/8" tubing 3/4" rods and insert pump
Belton Unit	AD-7	654 FROM (N)(S) SEC LINE 2984 FROM (E)(W) SEC LINE SEC. 9 T. 46 N.R. 33W	K.R.E.D	630'	O	12/12/2007	12/14/2007	4 1/2" casing cemented to surface 2 3/8" tubing 3/4" rods and insert pump
Belton Unit	AD-8	630 FROM (N)(S) SEC LINE 3401 FROM (E)(W) SEC LINE SEC. 9 T. 46 N.R. 33W	K.R.E.D	622'	O	05/14/1999	05/27/1999	4 1/2" casing cemented to surface 2 3/8" tubing 3/4" rods and insert pump
Belton Unit	AD-9	644 FROM (N)(S) SEC LINE 3835 FROM (E)(W) SEC LINE SEC. 9 T. 46 N.R. 33W	K.R.E.D	662'	Plugged	08/25/1987	U 1987	4 1/2" casing cemented to surface Squeezed cement into formation to surface on 04/04/2012
Belton Unit	AD-10	662 FROM (N)(S) SEC LINE 4239 FROM (E)(W) SEC LINE SEC. 9 T. 46 N.R. 33W	K.R.E.D	659'	O	05/25/1987	07/21/1987	4 1/2" casing cemented to surface 2 3/8" tubing 3/4" rods and insert pump
Belton Unit	AD-11	621 FROM (N)(S) SEC LINE 4785 FROM (E)(W) SEC LINE SEC. 9 T. 46 N.R. 33W	K.R.E.D	665'	Plugged	U 1987	U 1987	4 1/2" casing cemented to surface Squeezed cement into formation to surface on 03/19/2012
Belton Unit	AD-12	1210 FROM (N)(S) SEC LINE 3807 FROM (E)(W) SEC LINE SEC. 9 T. 46 N.R. 33W	K.R.E.D	710'	O	01/23/2008	02/26/2008	4 1/2" casing cemented to surface 2 3/8" tubing 3/4" rods and insert pump

AREA OF REVIEW WELLS (1/2 MILE RADIUS AROUND WELL) THAT PENETRATE THE INJECTION INTERVAL

INSTRUCTIONS

In the grid below, place the descriptions of area of review wells (1/2 mile radius around well) of public record that penetrate the proposed injection zone. Complete the following: lease name, well number, location, owner, depth in feet, type of well (Oil = O, Gas = G, Water = W, Injection = I, Strat Test = S, Unknown = U, Other - specify), date spudded, date completed, and construction of the well. Give a brief but accurate description of the well's construction including all plugging and/or completion of information, detailing the cement, casing, and subsurface casing information.

LEASE	WELL NO.	LOCATION	OWNER	DEPTH	TYPE	DATE SPUDDED	DATE COMPLETED	CONSTRUCTION
Belton Unit	AD-13	1100 FROM (N)(S) SEC LINE 2420 FROM (E)(W) SEC LINE SEC. 9 T. 46 N.R. 33W	K.R.E.D.	700'	Plugged	12/21/2007	N/A	Cemented from bottom to top on 12/27/2007
Belton Unit	AD-14	1067 FROM (N)(S) SEC LINE 3405 FROM (E)(W) SEC LINE SEC. 9 T. 46 N.R. 33W	K.R.E.D	609'	O	04/21/1999	05/13/1999	4 1/2" casing cemented to surface 2 3/8" tubing 3/4" rods and insert pump
Belton Unit	AD-15	1210 FROM (N)(S) SEC LINE 3607 FROM (E)(W) SEC LINE SEC. 9 T. 46 N.R. 33W	K.R.E.D	617'	O	11/13/1989	11/14/1989	4 1/2" casing cemented to surface 2 3/8" tubing 3/4" rods and insert pump
Belton Unit	AD-16	1100 FROM (N)(S) SEC LINE 4225 FROM (E)(W) SEC LINE SEC. 9 T. 46 N.R. 33W	K.R.E.D	666'	Plugged	07/23/1987	U-1987	4 1/2" casing cemented to surface Squeezed cement into formation to surface on 04/04/2012
Belton Unit	AD-17	1105 FROM (N)(S) SEC LINE 4057 FROM (E)(W) SEC LINE SEC. 9 T. 46 N.R. 33W	K.R.E.D	647'	O	U	U	4 1/2" casing cemented to surface 2 3/8" tubing 3/4" rods and insert pump Plugged 11/01/2012
Belton Unit	AD-18	1100 FROM (N)(S) SEC LINE 300 FROM (E)(W) SEC LINE SEC. 9 T. 46 N.R. 33W	K.R.E.D	676.5'	O	01/02/2008	02/26/2008	4 1/2" casing cemented to surface 2 3/8" tubing 3/4" rods and insert pump
Belton Unit	AD-21	1535 FROM (N)(S) SEC LINE 3809 FROM (E)(W) SEC LINE SEC. 9 T. 46 N.R. 33W	K.R.E.D	656'	O	09/11/2003	09/12/2003	4 1/2" casing cemented to surface 2 3/8" tubing 3/4" rods and insert pump
Belton Unit	AD-22	1539 FROM (N)(S) SEC LINE 4212 FROM (E)(W) SEC LINE SEC. 9 T. 46 N.R. 33W	K.R.E.D	650'	O	06/13/1999	06/18/1999	4 1/2" casing cemented to surface 2 3/8" tubing 3/4" rods and insert pump
Belton Unit	AD-23	1941 FROM (N)(S) SEC LINE 4644 FROM (E)(W) SEC LINE SEC. 9 T. 46 N.R. 33W	K.R.E.D	644'	O	09/09/2003	09/11/2003	4 1/2" casing cemented to surface 2 3/8" tubing 3/4" rods and insert pump

AREA OF REVIEW WELLS (1/2 MILE RADIUS AROUND WELL) THAT PENETRATE THE INJECTION INTERVAL

INSTRUCTIONS

In the grid below, place the descriptions of area of review wells (1/2 mile radius around well) of public record that penetrate the proposed injection zone. Complete the following: lease name, well number, location, owner, depth in feet, type of well (Oil = O, Gas = G, Water = W, Injection = I, Strat Test = S, Unknown = U, Other - specify), date spudded, date completed, and construction of the well. Give a brief but accurate description of the well's construction including all plugging and/or completion of information, detailing the cement, casing, and subsurface casing information.

LEASE	WELL NO.	LOCATION	OWNER	DEPTH	TYPE	DATE SPUDDED	DATE COMPLETED	CONSTRUCTION
Belton Unit	AD-24	1540 FROM (N)(S) SEC LINE 300 FROM (E)(W) SEC LINE SEC. 9 T. 46 N.R. 33W	K.R.E.D.	672.5	O	12/27/2007	02/06/2008	4 1/2" casing cemented to surface 2 3/8" tubing 3/4" rods and insert pump
Belton Unit	AD-28	1979 FROM (N)(S) SEC LINE 4193 FROM (E)(W) SEC LINE SEC. 9 T. 46 N.R. 33W	K.R.E.D	629'	O	07/08/1999	07/14/1999	4 1/2" casing cemented to surface 2 3/8" tubing 3/4" rods and insert pump
Belton Unit	AD-29	1972 FROM (N)(S) SEC LINE 4162 FROM (E)(W) SEC LINE SEC. 9 T. 46 N.R. 33W	K.R.E.D	625'	O	06/18/1999	07/07/1999	4 1/2" casing cemented to surface 2 3/8" tubing 3/4" rods and insert pump
Belton Unit	ADI-18	1751 FROM (N)(S) SEC LINE 4003 FROM (E)(W) SEC LINE SEC. 9 T. 46 N.R. 33W	K.R.E.D	651.5'	I	10/09/2003	10/10/2003	4 1/2" casing cemented to surface
Belton Unit	ADI-19	1754 FROM (N)(S) SEC LINE 4431 FROM (E)(W) SEC LINE SEC. 9 T. 46 N.R. 33W	K.R.E.D	654.5'	I	10/07/2003	10/08/2003	4 1/2" casing cemented to surface
Belton Unit	ADI-24	1354 FROM (N)(S) SEC LINE 3631 FROM (E)(W) SEC LINE SEC. 9 T. 46 N.R. 33W	K.R.E.D	662'	I	09/16/2003	09/17/2003	4 1/2" casing cemented to surface
Belton Unit	ADI-25	1353 FROM (N)(S) SEC LINE 3965 FROM (E)(W) SEC LINE SEC. 9 T. 46 N.R. 33W	K.R.E.D	651.5'	I	09/12/2003	09/15/2003	4 1/2" casing cemented to surface
Belton Unit	ADI-26	1354 FROM (N)(S) SEC LINE 4453 FROM (E)(W) SEC LINE SEC. 9 T. 46 N.R. 33W	K.R.E.D	650.5'	I	09/17/2003	09/19/2003	4 1/2" casing cemented to surface
Belton Unit	ADI-27	1320 FROM (N)(S) SEC LINE 520 FROM (E)(W) SEC LINE SEC. 9 T. 46 N.R. 33W	K.R.E.D	674.1'	I	01/04/2008	04/16/2008	4 1/2" casing cemented to surface

AREA OF REVIEW WELLS (1/2 MILE RADIUS AROUND WELL) THAT PENETRATE THE INJECTION INTERVAL

INSTRUCTIONS

In the grid below, place the descriptions of area of review wells (1/2 mile radius around well) of public record that penetrate the proposed injection zone. Complete the following: lease name, well number, location, owner, depth in feet, type of well (Oil = O, Gas = G, Water = W, Injection = I, Strat Test = S, Unknown = U, Other - specify), date spudded, date completed, and construction of the well. Give a brief but accurate description of the well's construction including all plugging and/or completion of information, detailing the cement, casing, and subsurface casing information.

LEASE	WELL NO.	LOCATION	OWNER	DEPTH	TYPE	DATE SPUDDED	DATE COMPLETED	CONSTRUCTION
Belton Unit	AD 9-2	1603 FROM (N)(S) SEC LINE 1500 FROM (E)(W) SEC LINE SEC. 9 T. 46 N.R. 33W	K.R.E.D.	760'	O	03/30/2012	05/07/2012	741' of 4 1/2" casing cemented to surface
Belton Unit	AD11-2	1600 FROM (N)(S) SEC LINE 534 FROM (E)(W) SEC LINE SEC. 9 T. 46 N.R. 33W	K.R.E.D.	750'	O	03/12/2012	04/27/2012	737' of 4 1/2" casing cemented to surface
Belton Unit	AD16-2	1159 FROM (N)(S) SEC LINE 1086 FROM (E)(W) SEC LINE SEC. 9 T. 46 N.R. 33W	K.R.E.D.	760'	O	03/28/2012	04/27/2012	739' of 4 1/2" casing cemented to surface
Belton Unit	AD-20	1520 FROM (N)(S) SEC LINE 1891 FROM (E)(W) SEC LINE SEC. 9 T. 46 N.R. 33W	K.R.E.D	760'	O	03/29/2012	06/11/2012	740' of 4 1/2" casing cemented to surface
Belton Unit	AD-26	1985 FROM (N)(S) SEC LINE 1900 FROM (E)(W) SEC LINE SEC. 9 T. 46 N.R. 33W	K.R.E.D	770'	O	04/05/2012	06/13/2012	745' of 4 1/2" casing cemented to surface
Belton Unit	AD-27	1985 FROM (N)(S) SEC LINE 1476 FROM (E)(W) SEC LINE SEC. 9 T. 46 N.R. 33W	K.R.E.D.	760'	O	03/30/2012	06/13/2012	741' of 4 1/2" casing cemented to surface
Belton Unit	AD-31	2396 FROM (N)(S) SEC LINE 2342 FROM (E)(W) SEC LINE SEC. 9 T. 46 N.R. 33W	K.R.E.D.	701'	O	04/12/2012	Not Complete	688' of 2 7/8" casing cemented to surface
Belton Unit	AD-32	2408 FROM (N)(S) SEC LINE 1876 FROM (E)(W) SEC LINE SEC. 9 T. 46 N.R. 33W	K.R.E.D.	760'	O	04/06/2012	06/28/2012	745' of 4 1/2" casing cemented to surface
Belton Unit	AD-33	2435 FROM (N)(S) SEC LINE 1476 FROM (E)(W) SEC LINE SEC. 9 T. 46 N.R. 33W	K.R.E.D.	760'	O	04/03/2012	07/04/2012	741' of 4 1/2" casing cemented to surface

AREA OF REVIEW WELLS (1/2 MILE RADIUS AROUND WELL) THAT PENETRATE THE INJECTION INTERVAL

INSTRUCTIONS

In the grid below, place the descriptions of area of review wells (1/2 mile radius around well) of public record that penetrate the proposed injection zone. Complete the following: lease name, well number, location, owner, depth in feet, type of well (Oil = O, Gas = G, Water = W, Injection = I, Strat Test = S, Unknown = U, Other - specify), date spudded, date completed, and construction of the well. Give a brief but accurate description of the well's construction including all plugging and/or completion of information, detailing the cement, casing, and subsurface casing information.

LEASE	WELL NO.	LOCATION	OWNER	DEPTH	TYPE	DATE SPUDDED	DATE COMPLETED	CONSTRUCTION
Belton Unit	AD 3-2	2168 FROM (N)(S) SEC LINE 1544 FROM (E)(W) SEC LINE SEC. 9 T. 46 N.R. 33W	K.R.E.D.	770'	O	06/15/2012	Not Complete	713' of 4 1/2" casing cemented to surface
Belton Unit	AD 4-2	2560 FROM (N)(S) SEC LINE 1185 FROM (E)(W) SEC LINE SEC. 9 T. 46 N.R. 33W	K.R.E.D.	770'	O	06/22/2012	08/09/2012	724' of 4 1/2" casing cemented to surface
Belton Unit	AD 5-2	1860 FROM (N)(S) SEC LINE 1040 FROM (E)(W) SEC LINE SEC. 9 T. 46 N.R. 33W	K.R.E.D.	770'	O	06/20/2012	08/02/2012	721' of 4 1/2" casing cemented to surface
Belton Unit	AD-34	2435 FROM (N)(S) SEC LINE 1076 FROM (E)(W) SEC LINE SEC. 9 T. 46 N.R. 33W	K.R.E.D	700'	O	05/04/2012	07/09/2012	686' of 4 1/2" casing cemented to surface
Belton Unit	ADI-42	382 FROM (N)(S) SEC LINE 446 FROM (E)(W) SEC LINE SEC. 9 T. 46 N.R. 33W	K.R.E.D	730'	I	07/19/2012	Not Complete	686' of 2 7/8" casing cemented to surface
Belton Unit	ADI-43	411 FROM (N)(S) SEC LINE 409 FROM (E)(W) SEC LINE SEC. 9 T. 46 N.R. 33W	K.R.E.D	730'	I	07/19/2012	↓	686' of 2 7/8" casing cemented to surface
Belton Unit	ADI-44	409 FROM (N)(S) SEC LINE 447 FROM (E)(W) SEC LINE SEC. 9 T. 46 N.R. 33W	K.R.E.D	730'	I	07/19/2012	↓	686' of 2 7/8" casing cemented to surface
Belton Unit	ADI-45	443 FROM (N)(S) SEC LINE 892 FROM (E)(W) SEC LINE SEC. 9 T. 46 N.R. 33W	K.R.E.D	730'	I	07/27/2012	↓	686' of 2 7/8" casing cemented to surface
Belton Unit	ADI-46	398 FROM (N)(S) SEC LINE 936 FROM (E)(W) SEC LINE SEC. 9 T. 46 N.R. 33W	K.R.E.D	730'	I	07/31/2012	↓	688' of 2 7/8" casing cemented to surface

MO 780-1136 (02-11)

AREA OF REVIEW WELLS (1/2 MILE RADIUS AROUND WELL) THAT PENETRATE THE INJECTION INTERVAL

INSTRUCTIONS

In the grid below, place the descriptions of area of review wells (1/2 mile radius around well) of public record that penetrate the proposed injection zone. Complete the following: lease name, well number, location, owner, depth in feet, type of well (Oil = O, Gas = G, Water = W, Injection = I, Strat Test = S, Unknown = U, Other - specify), date spudded, date completed, and construction of the well. Give a brief but accurate description of the well's construction including all plugging and/or completion of information, detailing the cement, casing, and subsurface casing information.

LEASE	WELL NO.	LOCATION	OWNER	DEPTH	TYPE	DATE SPUDDED	DATE COMPLETED	CONSTRUCTION
Belton Unit	ADI-30	880 FROM (N)(S) SEC LINE 2200 FROM (E)(W) SEC LINE SEC. 9 T. 46 N.R. 33W	K.R.E.D.	627.7'	I	12/19/2007	04/16/2008	4 1/2" casing cemented to surface
Belton Unit	ADI-31	860 FROM (N)(S) SEC LINE 3613 FROM (E)(W) SEC LINE SEC. 9 T. 46 N.R. 33W	K.R.E.D	633'	I	05/27/1999	06/04/1999	4 1/2" casing cemented to surface
Belton Unit	ADI-32	871 FROM (N)(S) SEC LINE 4034 FROM (E)(W) SEC LINE SEC. 9 T. 46 N.R. 33W	K.R.E.D	649'	I	V	V	4 1/2" casing cemented to surface
Belton Unit	ADI-33	881 FROM (N)(S) SEC LINE 4454 FROM (E)(W) SEC LINE SEC. 9 T. 46 N.R. 33W	K.R.E.D	642'	I	V	V	4 1/2" casing cemented to surface
Belton Unit	ADI-34	879 FROM (N)(S) SEC LINE 4891 FROM (E)(W) SEC LINE SEC. 9 T. 46 N.R. 33W	K.R.E.D	663	I	V	V	4 1/2" casing cemented to surface
Belton Unit	ADI-37	440 FROM (N)(S) SEC LINE 2200 FROM (E)(W) SEC LINE SEC. 9 T. 46 N.R. 33W	K.R.E.D	618.2	I	12/13/2007	04/16/2008	4 1/2" casing cemented to surface
Belton Unit	ADI-38	440 FROM (N)(S) SEC LINE 1760 FROM (E)(W) SEC LINE SEC. 9 T. 46 N.R. 33W	K.R.E.D	668.9'	I	12/17/2007	04/16/2008	4 1/2" casing cemented to surface
Belton Unit	ADI-39	441 FROM (N)(S) SEC LINE 4055 FROM (E)(W) SEC LINE SEC. 9 T. 46 N.R. 33W	K.R.E.D	631'	I	V	V	4 1/2" casing cemented to surface
Belton Unit	ADI-40	441 FROM (N)(S) SEC LINE 4465 FROM (E)(W) SEC LINE SEC. 9 T. 46 N.R. 33W	K.R.E.D	664'	I	V	V	4 1/2" casing cemented to surface

MO 780-1136 (02-11)

AREA OF REVIEW WELLS (1/2 MILE RADIUS AROUND WELL) THAT PENETRATE THE INJECTION INTERVAL

INSTRUCTIONS

In the grid below, place the descriptions of area of review wells (1/2 mile radius around well) of public record that penetrate the proposed injection zone. Complete the following: lease name, well number, location, owner, depth in feet, type of well (Oil = O, Gas = G, Water = W, Injection = I, Strat Test = S, Unknown = U, Other - specify), date spudded, date completed, and construction of the well. Give a brief but accurate description of the well's construction including all plugging and/or completion of information, detailing the cement, casing, and subsurface casing information.

LEASE	WELL NO.	LOCATION	OWNER	DEPTH	TYPE	DATE SPUDDED	DATE COMPLETED	CONSTRUCTION
Belton Unit	ADI-47	317 FROM (N)(S) SEC LINE 891 FROM (E)(W) SEC LINE SEC. 9 T. 46 N.R. 33W	K.R.E.D.	730'	I	07/31/2012	Not complete	687' of 2 7/8" casing cemented to surface
Belton Unit	ADI-51	166 FROM (N)(S) SEC LINE 464 FROM (E)(W) SEC LINE SEC. 9 T. 46 N.R. 33W	K.R.E.D.	730'	I	08/13/2012		690' of 2 7/8" casing cemented to surface
Belton Unit	ADI-52	187 FROM (N)(S) SEC LINE 445 FROM (E)(W) SEC LINE SEC. 9 T. 46 N.R. 33W	K.R.E.D.	730'	I	08/15/2012		684' of 2 7/8" casing cemented to surface
Belton Unit	ADI-53	51 FROM (N)(S) SEC LINE 453 FROM (E)(W) SEC LINE SEC. 9 T. 46 N.R. 33W	K.R.E.D	730'	I	08/16/2012		689' of 2 7/8" casing cemented to surface
Belton Unit	ADI-41	447 FROM (N)(S) SEC LINE 1904 FROM (E)(W) SEC LINE SEC. 9 T. 46 N.R. 33W	K.R.E.D	600'	I	U	U	4 1/2" casing cemented to surface
Belton Unit	AD-1	220 FROM (N)(S) SEC LINE 2420 FROM (E)(W) SEC LINE SEC. 9 T. 46 N.R. 33W	K.R.E.D	615'	O	12/03/2007	01/04/2008	4 1/2" casing cemented to surface 2 3/8" tubing 3/4" rods and insert pump
Belton Unit	AD-2	220 FROM (N)(S) SEC LINE 2000 FROM (E)(W) SEC LINE SEC. 9 T. 46 N.R. 33W	K.R.E.D	657'	O	12/06/2007	12/10/2007	4 1/2" casing cemented to surface 2 3/8" tubing 3/4" rods and insert pump
Belton Unit	AD-3	217 FROM (N)(S) SEC LINE 3806 FROM (E)(W) SEC LINE SEC. 9 T. 46 N.R. 33W	K.R.E.D	637'	O	08/31/1987	U	4 1/2" casing cemented to surface 2 3/8" tubing 3/4" rods and insert pump Plugged 07/19/2012
Belton Unit	ADI-48	408 FROM (N)(S) SEC LINE 1332 FROM (E)(W) SEC LINE SEC. 9 T. 46 N.R. 33W	K.R.E.D	730'	I	10/04/2012	11/30/2012	690' of 2 7/8" casing cemented to surface

MO 780-1136 (02-11)

AREA OF REVIEW WELLS (1/2 MILE RADIUS AROUND WELL) THAT PENETRATE THE INJECTION INTERVAL

INSTRUCTIONS

In the grid below, place the descriptions of area of review wells (1/2 mile radius around well) of public record that penetrate the proposed injection zone. Complete the following: lease name, well number, location, owner, depth in feet, type of well (Oil = O, Gas = G, Water = W, Injection = I, Strat Test = S, Unknown = U, Other - specify), date spudded, date completed, and construction of the well. Give a brief but accurate description of the well's construction including all plugging and/or completion of information, detailing the cement, casing, and subsurface casing information.

LEASE	WELL NO.	LOCATION	OWNER	DEPTH	TYPE	DATE SPUDDED	DATE COMPLETED	CONSTRUCTION
Belton Unit	ADI-49	440 FROM (N)(S) SEC LINE 1794 FROM (E)(W) SEC LINE SEC. 9 T. 46 N.R. 33W	K.R.E.D.	730'	I	11/03/2012	Not complete	688' of 2 7/8" casing cemented to surface
Belton Unit	ADI-50	411 FROM (N)(S) SEC LINE 1290 FROM (E)(W) SEC LINE SEC. 9 T. 46 N.R. 33W	K.R.E.D.	730'	I	11/12/2012	Not Complete	691' of 2 7/8" casing cemented to surface
Belton Unit	AD10-2	682 FROM (N)(S) SEC LINE 1117 FROM (E)(W) SEC LINE SEC. 9 T. 46 N.R. 33W	K.R.E.D.	740'	O	11/21/2012	11/30/2012	696' of 4 1/2" casing cemented to surface
Belton Unit	AD15-2	1688 FROM (N)(S) SEC LINE 1083 FROM (E)(W) SEC LINE SEC. 9 T. 46 N.R. 33W	K.R.E.D.	740'	O	11/15/2012	11/27/2012	726' of 4 1/2" casing cemented to surface
Belton Unit	AD17-2	1155 FROM (N)(S) SEC LINE 1062 FROM (E)(W) SEC LINE SEC. 9 T. 46 N.R. 33W	K.R.E.D.	740'	O	11/19/2012	11/30/2012	731' of 4 1/2" casing cemented to surface
		____ FROM (N)(S) SEC LINE ____ FROM (E)(W) SEC LINE SEC. ____ T. ____ N.R. ____						
		____ FROM (N)(S) SEC LINE ____ FROM (E)(W) SEC LINE SEC. ____ T. ____ N.R. ____						
		____ FROM (N)(S) SEC LINE ____ FROM (E)(W) SEC LINE SEC. ____ T. ____ N.R. ____						
		____ FROM (N)(S) SEC LINE ____ FROM (E)(W) SEC LINE SEC. ____ T. ____ N.R. ____						

AREA OF REVIEW WELLS (1/2 MILE RADIUS AROUND WELL) THAT PENETRATE THE INJECTION INTERVAL

INSTRUCTIONS

In the grid below, place the descriptions of area of review wells (1/2 mile radius around well) of public record that penetrate the proposed injection zone. Complete the following: lease name, well number, location, owner, depth in feet, type of well (Oil = O, Gas = G, Water = W, Injection = I, Strat Test = S, Unknown = U, Other - specify), date spudded, date completed, and construction of the well. Give a brief but accurate description of the well's construction including all plugging and/or completion of information, detailing the cement, casing, and subsurface casing information.

LEASE	WELL NO.	LOCATION	OWNER	DEPTH	TYPE	DATE SPUDDED	DATE COMPLETED	CONSTRUCTION
Benjamin	KR-3	2805 FROM (N)(S) SEC LINE 1815 FROM (E)(W) SEC LINE SEC. 9 T. 46 N.R. 33W	S&B	750'	O	11/08/2012	Not complete	718' of 2 7/8" casing cemented to surface
Benjamin	KR-4	2805 FROM (N)(S) SEC LINE 1485 FROM (E)(W) SEC LINE SEC. 9 T. 46 N.R. 33W	S&B	700'	O	11/15/2012		696' of 2 7/8" casing cemented to surface
Benjamin	KR-5	2805 FROM (N)(S) SEC LINE 1155 FROM (E)(W) SEC LINE SEC. 9 T. 46 N.R. 33W	S&B	700'	O	11/21/2012		688' of 2 7/8" casing cemented to surface
Benjamin	KR-8	3135 FROM (N)(S) SEC LINE 1815 FROM (E)(W) SEC LINE SEC. 9 T. 46 N.R. 33W	S&B	705'	O	11/14/2012		686' of 2 7/8" casing cemented to surface
Benjamin	KR-9	3135 FROM (N)(S) SEC LINE 1485 FROM (E)(W) SEC LINE SEC. 9 T. 46 N.R. 33W	S&B	715'	O	11/15/2012		693' of 2 7/8" casing cemented to surface
Benjamin	KR-12	3465 FROM (N)(S) SEC LINE 2145 FROM (E)(W) SEC LINE SEC. 9 T. 46 N.R. 33W	S&B	682'	O	11/16/2012		653' of 2 7/8" casing cemented to surface
Benjamin	KR-13	3465 FROM (N)(S) SEC LINE 1815 FROM (E)(W) SEC LINE SEC. 9 T. 46 N.R. 33W	S&B	705'	O	11/13/2012		683' of 2 7/8" casing cemented to surface
Benjamin	KR-14	3465 FROM (N)(S) SEC LINE 1485 FROM (E)(W) SEC LINE SEC. 9 T. 46 N.R. 33W	S&B	715'	O	11/21/2012		691' of 2 7/8" casing cemented to surface
Benjamin	KR-15	3465 FROM (N)(S) SEC LINE 1155 FROM (E)(W) SEC LINE SEC. 9 T. 46 N.R. 33W	S&B	705'	O	11/27/2012		689' of 2 7/8" casing cemented to surface

MO 780-1136 (02-11)

AREA OF REVIEW WELLS (1/2 MILE RADIUS AROUND WELL) THAT PENETRATE THE INJECTION INTERVAL

INSTRUCTIONS

In the grid below, place the descriptions of area of review wells (1/2 mile radius around well) of public record that penetrate the proposed injection zone. Complete the following: lease name, well number, location, owner, depth in feet, type of well (Oil = O, Gas = G, Water = W, Injection = I, Strat Test = S, Unknown = U, Other - specify), date spudded, date completed, and construction of the well. Give a brief but accurate description of the well's construction including all plugging and/or completion of information, detailing the cement, casing, and subsurface casing information.

LEASE	WELL NO.	LOCATION	OWNER	DEPTH	TYPE	DATE SPUDDED	DATE COMPLETED	CONSTRUCTION
Benjamin	KR-17	3795 FROM (N)(S) SEC LINE 2145 FROM (E)(W) SEC LINE SEC. 9 T. 46 N.R. 33W	S&B	715'	O	11/19/2012	Not complete	690' of 2 7/8" casing cemented to surface
Benjamin	KR-18	3796 FROM (N)(S) SEC LINE 1815 FROM (E)(W) SEC LINE SEC. 9 T. 46 N.R. 33W	S&B	705'	O	11/12/2012	12/13/2012	688' of 2 7/8" casing cemented to surface
Benjamin	KR-19	3795 FROM (N)(S) SEC LINE 1485 FROM (E)(W) SEC LINE SEC. 9 T. 46 N.R. 33W	S&B	700'	O	11/27/2012	Not complete	690' of 2 7/8" casing cemented to surface
Benjamin	KR-22	4125 FROM (N)(S) SEC LINE 2145 FROM (E)(W) SEC LINE SEC. 9 T. 46 N.R. 33W	S&B	700'	O	11/20/2012	Not complete	691' of 2 7/8" casing cemented to surface
Benjamin	KR-24	4125 FROM (N)(S) SEC LINE 1485 FROM (E)(W) SEC LINE SEC. 9 T. 46 N.R. 33W	S&B	700'	O	11/28/2012	12/13/2012	690' of 2 7/8" casing cemented to surface
Benjamin	KR-31	4785 FROM (N)(S) SEC LINE 2475 FROM (E)(W) SEC LINE SEC. 9 T. 46 N.R. 33W	S&B	715'	O	11/30/2012	Not complete	687' of 2 7/8" casing cemented to surface
Benjamin	KR-32	4785 FROM (N)(S) SEC LINE 2145 FROM (E)(W) SEC LINE SEC. 9 T. 46 N.R. 33W	S&B	715'	O	11/28/2012	↓	685' of 2 7/8" casing cemented to surface
Benjamin	KR-33	4785 FROM (N)(S) SEC LINE 1815 FROM (E)(W) SEC LINE SEC. 9 T. 46 N.R. 33W	S&B	715'	O	11/29/2012	↓	683' of 2 7/8" casing cemented to surface
		____ FROM (N)(S) SEC LINE ____ FROM (E)(W) SEC LINE SEC. ____ T. ____ N.R. ____						

MO 780-1136 (02-11)

AREA OF REVIEW WELLS (1/2 MILE RADIUS AROUND WELL) THAT PENETRATE THE INJECTION INTERVAL

INSTRUCTIONS

In the grid below, place the descriptions of area of review wells (1/2 mile radius around well) of public record that penetrate the proposed injection zone. Complete the following: lease name, well number, location, owner, depth in feet, type of well (Oil = O, Gas = G, Water = W, Injection = I, Strat Test = S, Unknown = U, Other - specify), date spudded, date completed, and construction of the well. Give a brief but accurate description of the well's construction including all plugging and/or completion of information, detailing the cement, casing, and subsurface casing information.

LEASE	WELL NO.	LOCATION	OWNER	DEPTH	TYPE	DATE SPUDDED	DATE COMPLETED	CONSTRUCTION
Benjamin	KR-10	3135' FROM (N)(S) SEC LINE 1155' FROM (E)(W) SEC LINE SEC. 9 T. 46 N.R. 33W	S&B	700'	O	12/03/2012	Not Complete	690' of 2 7/8" casing cemented to surface
Benjamin	KR-20	3195' FROM (N)(S) SEC LINE 1155' FROM (E)(W) SEC LINE SEC. 9 T. 46 N.R. 33W	S&B	715'	O	12/03/2012		694' of 2 7/8" casing cemented to surface
Benjamin	KR-26	2455' FROM (N)(S) SEC LINE 2476' FROM (E)(W) SEC LINE SEC. 9 T. 46 N.R. 33W	S&B	715'	O	12/04/2012		689' of 2 7/8" casing cemented to surface
Benjamin	KR-27	2455' FROM (N)(S) SEC LINE 2145' FROM (E)(W) SEC LINE SEC. 9 T. 46 N.R. 33W	S&B	715'	O	12/05/2012		691' of 2 7/8" casing cemented to surface
Benjamin	KR-29	2455' FROM (N)(S) SEC LINE 1485' FROM (E)(W) SEC LINE SEC. 9 T. 46 N.R. 33W	S&B	700'	O	12/04/2012		687' of 2 7/8" casing cemented to surface
		____ FROM (N)(S) SEC LINE ____ FROM (E)(W) SEC LINE SEC. ____ T. ____ N.R. ____						
		____ FROM (N)(S) SEC LINE ____ FROM (E)(W) SEC LINE SEC. ____ T. ____ N.R. ____						
		____ FROM (N)(S) SEC LINE ____ FROM (E)(W) SEC LINE SEC. ____ T. ____ N.R. ____						
		____ FROM (N)(S) SEC LINE ____ FROM (E)(W) SEC LINE SEC. ____ T. ____ N.R. ____						

MO 780-1136 (02-11)

AREA OF REVIEW WELLS (1/2 MILE RADIUS AROUND WELL) THAT PENETRATE THE INJECTION INTERVAL

INSTRUCTIONS

In the grid below, place the descriptions of area of review wells (1/2 mile radius around well) of public record that penetrate the proposed injection zone. Complete the following: lease name, well number, location, owner, depth in feet, type of well (Oil = O, Gas = G, Water = W, Injection = I, Strat Test = S, Unknown = U, Other - specify), date spudded, date completed, and construction of the well. Give a brief but accurate description of the well's construction including all plugging and/or completion of information, detailing the cement, casing, and subsurface casing information.

LEASE	WELL NO.	LOCATION	OWNER	DEPTH	TYPE	DATE SPUDDED	DATE COMPLETED	CONSTRUCTION
Walton	2-W	330' FROM (N)(S) SEC LINE 2679' FROM (E)(W) SEC LINE SEC. 4 T. 46 N.R. 33W	K.R.E.D.	620'	I	12/02/1980	U	603' of 2 7/8" casing cemented to surface
Walton	3-W	330' FROM (N)(S) SEC LINE 2362' FROM (E)(W) SEC LINE SEC. 4 T. 46 N.R. 33W	K.R.E.D.	620'	I	12/10/1980	U	606' of 2 7/8" casing cemented to surface
Walton	4-W	4000' FROM (N)(S) SEC LINE 2783' FROM (E)(W) SEC LINE SEC. 4 T. 46 N.R. 33W	K.R.E.D.	620'	I	10/01/1992	12/14/1992	588' of 2 7/8" casing cemented to surface
Walton	5-W	4201' FROM (N)(S) SEC LINE 2700' FROM (E)(W) SEC LINE SEC. 4 T. 46 N.R. 33W	K.R.E.D.	600'	O	02/24/1982	U	592' of 2 7/8" casing cemented to surface
Walton	6-W	1555' FROM (N)(S) SEC LINE 2330' FROM (E)(W) SEC LINE SEC. 4 T. 46 N.R. 33W	K.R.E.D.	600'	O	09/21/1977	04/25/1978	573' of 2 7/8" casing cemented to surface
Walton	8-W	1580' FROM (N)(S) SEC LINE 1595' FROM (E)(W) SEC LINE SEC. 4 T. 46 N.R. 33W	K.R.E.D.	600'	I	U 9/1977	U	590' of 2 7/8" casing cemented to surface
Walton	21-W	330' FROM (N)(S) SEC LINE 2043' FROM (E)(W) SEC LINE SEC. 4 T. 46 N.R. 33W	K.R.E.D.	620'	I	08/29/1988	U	604' of 2 7/8" casing cemented to surface
Walton	22-W	1413' FROM (N)(S) SEC LINE 1775' FROM (E)(W) SEC LINE SEC. 4 T. 46 N.R. 33W	K.R.E.D.	620'	I	09/01/1988	U	615' of 2 7/8" casing cemented to surface
Walton	23-W	1048' FROM (N)(S) SEC LINE 2679' FROM (E)(W) SEC LINE SEC. 4 T. 46 N.R. 33W	K.R.E.D.	620'	I	09/06/1988	U	607' of 2 7/8" casing cemented to surface

AREA OF REVIEW WELLS (1/2 MILE RADIUS AROUND WELL) THAT PENETRATE THE INJECTION INTERVAL

INSTRUCTIONS

In the grid below, place the descriptions of area of review wells (1/2 mile radius around well) of public record that penetrate the proposed injection zone. Complete the following: lease name, well number, location, owner, depth in feet, type of well (Oil = O, Gas = G, Water = W, Injection = I, Strat Test = S, Unknown = U, Other - specify), date spudded, date completed, and construction of the well. Give a brief but accurate description of the well's construction including all plugging and/or completion of information, detailing the cement, casing, and subsurface casing information.

LEASE	WELL NO.	LOCATION	OWNER	DEPTH	TYPE	DATE SPUDDED	DATE COMPLETED	CONSTRUCTION
Walton	27-W	1860' FROM (N)(S) SEC LINE 2085' FROM (E)(W) SEC LINE SEC. 4 T. 46 N.R. 33W	K.R.E.D.	610'	I	10/09/1992	12/14/1992	593' of 2 7/8" casing cemented to surface
Walton	42-W	1520' FROM (N)(S) SEC LINE 2763' FROM (E)(W) SEC LINE SEC. 4 T. 46 N.R. 33W	K.R.E.D.	600'	I	10/07/1992	12/14/1992	585' of 2 7/8" casing cemented to surface
Walton	3	837' FROM (N)(S) SEC LINE 2584' FROM (E)(W) SEC LINE SEC. 4 T. 46 N.R. 33W	K.R.E.D.	625'	O	10/06/1992	10/07/1992	611' of 2 7/8" casing cemented to surface
Walton	5	1020' FROM (N)(S) SEC LINE 2097' FROM (E)(W) SEC LINE SEC. 4 T. 46 N.R. 33W	K.R.E.D.	600'	O	U	U	590' of 2 7/8" casing cemented to surface
Walton	6	1162' FROM (N)(S) SEC LINE 2399' FROM (E)(W) SEC LINE SEC. 4 T. 46 N.R. 33W	K.R.E.D.	600'	O	U	U	590' of 2 7/8" casing cemented to surface
Walton	7	1137' FROM (N)(S) SEC LINE 2637' FROM (E)(W) SEC LINE SEC. 4 T. 46 N.R. 33W	K.R.E.D.	600'	O	U	U	590' of 2 7/8" casing cemented to surface
Walton	8	1947' FROM (N)(S) SEC LINE 2109' FROM (E)(W) SEC LINE SEC. 4 T. 46 N.R. 33W	K.R.E.D.	600'	O	U	U	590' of 2 7/8" casing cemented to surface
Walton	9	847' FROM (N)(S) SEC LINE 2341' FROM (E)(W) SEC LINE SEC. 4 T. 46 N.R. 33W	K.R.E.D.	600'	O	U	U	590' of 2 7/8" casing cemented to surface
Walton	10	1930' FROM (N)(S) SEC LINE 2567' FROM (E)(W) SEC LINE SEC. 4 T. 46 N.R. 33W	K.R.E.D.	600'	O	U	U	590' of 2 7/8" casing cemented to surface

AREA OF REVIEW WELLS (1/2 MILE RADIUS AROUND WELL) THAT PENETRATE THE INJECTION INTERVAL

INSTRUCTIONS

In the grid below, place the descriptions of area of review wells (1/2 mile radius around well) of public record that penetrate the proposed injection zone. Complete the following: lease name, well number, location, owner, depth in feet, type of well (Oil = O, Gas = G, Water = W, Injection = I, Strat Test = S, Unknown = U, Other - specify), date spudded, date completed, and construction of the well. Give a brief but accurate description of the well's construction including all plugging and/or completion of information, detailing the cement, casing, and subsurface casing information.

LEASE	WELL NO.	LOCATION	OWNER	DEPTH	TYPE	DATE SPUDDED	DATE COMPLETED	CONSTRUCTION
Walton	11	1406' FROM (N)(S) SEC LINE 2445' FROM (E)(W) SEC LINE SEC. 4 T. 46 N.R. 33W	K.R.E.D.	600'	O	U	U	590' of 2 7/8" casing cemented to surface
Walton	12	2044' FROM (N)(S) SEC LINE 2524' FROM (E)(W) SEC LINE SEC. 4 T. 46 N.R. 33W	K.R.E.D.	600'	O	U	U	590' of 2 7/8" casing cemented to surface
Walton	13	1658' FROM (N)(S) SEC LINE 2559' FROM (E)(W) SEC LINE SEC. 4 T. 46 N.R. 33W	K.R.E.D.	625'	O	U	U	590' of 2 7/8" casing cemented to surface
Walton	14	1914' FROM (N)(S) SEC LINE 2174' FROM (E)(W) SEC LINE SEC. 4 T. 46 N.R. 33W	K.R.E.D.	600'	O	U	U	590' of 2 7/8" casing cemented to surface
Walton	15	1732' FROM (N)(S) SEC LINE 2506' FROM (E)(W) SEC LINE SEC. 4 T. 46 N.R. 33W	K.R.E.D.	600'	O	U	U	590' of 2 7/8" casing cemented to surface
Walton	16	1547' FROM (N)(S) SEC LINE 2620' FROM (E)(W) SEC LINE SEC. 4 T. 46 N.R. 33W	K.R.E.D.	600'	O	U	U	590' of 2 7/8" casing cemented to surface
Walton	17	1272' FROM (N)(S) SEC LINE 2675' FROM (E)(W) SEC LINE SEC. 4 T. 46 N.R. 33W	K.R.E.D.	600'	O	U	U	590' of 2 7/8" casing cemented to surface
Walton	18	1266' FROM (N)(S) SEC LINE 2331' FROM (E)(W) SEC LINE SEC. 4 T. 46 N.R. 33W	K.R.E.D.	600'	O	U	U	590' of 2 7/8" casing cemented to surface
Walton	19	1742' FROM (N)(S) SEC LINE 2314' FROM (E)(W) SEC LINE SEC. 4 T. 46 N.R. 33W	K.R.E.D.	600'	O	U	U	590' of 2 7/8" casing cemented to surface

MO 780-1136 (02-11)

AREA OF REVIEW WELLS (1/2 MILE RADIUS AROUND WELL) THAT PENETRATE THE INJECTION INTERVAL

INSTRUCTIONS

In the grid below, place the descriptions of area of review wells (1/2 mile radius around well) of public record that penetrate the proposed injection zone. Complete the following: lease name, well number, location, owner, depth in feet, type of well (Oil = O, Gas = G, Water = W, Injection = I, Strat Test = S, Unknown = U, Other - specify), date spudded, date completed, and construction of the well. Give a brief but accurate description of the well's construction including all plugging and/or completion of information, detailing the cement, casing, and subsurface casing information.

LEASE	WELL NO.	LOCATION	OWNER	DEPTH	TYPE	DATE SPUDDED	DATE COMPLETED	CONSTRUCTION
Walton	20	2279' FROM (N)(S) SEC LINE 2363' FROM (E)(W) SEC LINE SEC. 4 T. 46 N.R. 33W	K.R.E.D.	550'	O	01/21/1976	U	535' of 4 1/2" casing cemented to surface
Walton	22	1413' FROM (N)(S) SEC LINE 1775' FROM (E)(W) SEC LINE SEC. 4 T. 46 N.R. 33W	K.R.E.D.	594'	O	08/18/1976	U	570' of 4 1/2" casing cemented to surface
Walton	23	1048' FROM (N)(S) SEC LINE 2570' FROM (E)(W) SEC LINE SEC. 4 T. 46 N.R. 33W	K.R.E.D.	600'	O	U	U	590' of 2 7/8" casing cemented to surface
Walton	24	165' FROM (N)(S) SEC LINE 1480' FROM (E)(W) SEC LINE SEC. 4 T. 46 N.R. 33W	K.R.E.D.	620'	O	01/06/1981	U	610' of 2 7/8" casing cemented to surface
Walton	25	165' FROM (N)(S) SEC LINE 1810' FROM (E)(W) SEC LINE SEC. 4 T. 46 N.R. 33W	K.R.E.D.	620'	O	11/14/1980	U	610' of 2 7/8" casing cemented to surface
Walton	26	165' FROM (N)(S) SEC LINE 2146' FROM (E)(W) SEC LINE SEC. 4 T. 46 N.R. 33W	K.R.E.D.	620'	O	10/21/1980	U	600' of 2 7/8" casing cemented to surface
Walton	27	495' FROM (N)(S) SEC LINE 2571' FROM (E)(W) SEC LINE SEC. 4 T. 46 N.R. 33W	K.R.E.D.	620'	O	01/28/1983	02/04/1983	599' of 2 7/8" casing cemented to surface
Walton	28	495' FROM (N)(S) SEC LINE 2521' FROM (E)(W) SEC LINE SEC. 4 T. 46 N.R. 33W	K.R.E.D.	620'	O	02/04/1983	02/09/1983	600' of 2 7/8" casing cemented to surface
Walton	29	495' FROM (N)(S) SEC LINE 2140' FROM (E)(W) SEC LINE SEC. 4 T. 46 N.R. 33W	K.R.E.D.	608'	O	09/28/1977	U	596' of 4 1/2" casing cemented to surface

AREA OF REVIEW WELLS (1/2 MILE RADIUS AROUND WELL) THAT PENETRATE THE INJECTION INTERVAL

INSTRUCTIONS

In the grid below, place the descriptions of area of review wells (1/2 mile radius around well) of public record that penetrate the proposed injection zone. Complete the following: lease name, well number, location, owner, depth in feet, type of well (Oil = O, Gas = G, Water = W, Injection = I, Strat Test = S, Unknown = U, Other - specify), date spudded, date completed, and construction of the well. Give a brief but accurate description of the well's construction including all plugging and/or completion of information, detailing the cement, casing, and subsurface casing information.

LEASE	WELL NO.	LOCATION	OWNER	DEPTH	TYPE	DATE SPUDDED	DATE COMPLETED	CONSTRUCTION
Walton	31	1216' FROM (N)(S) SEC LINE 1517' FROM (E)(W) SEC LINE SEC. 4 T. 46 N.R. 33W	K.R.E.D.	590'	O	01/08/1981	U	502' of 2 7/8" casing cemented to surface
Walton	32	1258' FROM (N)(S) SEC LINE 1647' FROM (E)(W) SEC LINE SEC. 4 T. 46 N.R. 33W	K.R.E.D.	600'	O	02/16/1982	U	588' of 2 7/8" casing cemented to surface
Walton	37	2221' FROM (N)(S) SEC LINE 1518' FROM (E)(W) SEC LINE SEC. 4 T. 46 N.R. 33W	K.R.E.D.	595'	O	03/01/1982	U	595' of 2 7/8" casing cemented to surface
		_____ FROM (N)(S) SEC LINE _____ FROM (E)(W) SEC LINE SEC. _____ T. _____ N.R. _____						
		_____ FROM (N)(S) SEC LINE _____ FROM (E)(W) SEC LINE SEC. _____ T. _____ N.R. _____						
		_____ FROM (N)(S) SEC LINE _____ FROM (E)(W) SEC LINE SEC. _____ T. _____ N.R. _____						
		_____ FROM (N)(S) SEC LINE _____ FROM (E)(W) SEC LINE SEC. _____ T. _____ N.R. _____						
		_____ FROM (N)(S) SEC LINE _____ FROM (E)(W) SEC LINE SEC. _____ T. _____ N.R. _____						
		_____ FROM (N)(S) SEC LINE _____ FROM (E)(W) SEC LINE SEC. _____ T. _____ N.R. _____						

AREA OF REVIEW WELLS (1/2 MILE RADIUS AROUND WELL) THAT PENETRATE THE INJECTION INTERVAL

INSTRUCTIONS

In the grid below, place the descriptions of area of review wells (1/2 mile radius around well) of public record that penetrate the proposed injection zone. Complete the following: lease name, well number, location, owner, depth in feet, type of well (Oil = O, Gas = G, Water = W, Injection = I, Strat Test = S, Unknown = U, Other - specify), date spudded, date completed, and construction of the well. Give a brief but accurate description of the well's construction including all plugging and/or completion of information, detailing the cement, casing, and subsurface casing information.

LEASE	WELL NO.	LOCATION	OWNER	DEPTH	TYPE	DATE SPUDDED	DATE COMPLETED	CONSTRUCTION
McLaughlin	0-K	1000 FROM (N)(S) SEC LINE 2333 FROM (E)(W) SEC LINE SEC. 4 T. 46 N.R. 33W	K.R.E.D.	620'	O	07/18/1983	08/03/1983	597' of 4 1/2" casing cemented to surface, 1 1/2" insert pump, 5' barrel
McLaughlin	1-C	1136 FROM (N)(S) SEC LINE 1819 FROM (E)(W) SEC LINE SEC. 4 T. 46 N.R. 33W	K.R.E.D.	640'	O	12/01/1982	01/15/1983	608' of 2 7/8" casing cemented to surface, 1 1/2" insert pump, 5' barrel
McLaughlin	1-E	1127 FROM (N)(S) SEC LINE 2316 FROM (E)(W) SEC LINE SEC. 4 T. 46 N.R. 33W	K.R.E.D.	660'	O	04/18/1983	04/26/1983	621' of 4 1/2" casing cemented to surface, 1 1/2" insert pump, 5' barrel
McLaughlin	1-G	1107 FROM (N)(S) SEC LINE 2414 FROM (E)(W) SEC LINE SEC. 4 T. 46 N.R. 33W	K.R.E.D.	640'	O	12/02/1982	1983	611' of 4 1/2" casing cemented to surface, 1 1/2" insert pump, 5' barrel
McLaughlin	1-J	1327 FROM (N)(S) SEC LINE 2507 FROM (E)(W) SEC LINE SEC. 4 T. 46 N.R. 33W	K.R.E.D.	633'	O	09/27/1982	10/22/1982	608' of 4 1/2" casing cemented to surface, 1 1/2" insert pump, 5' barrel
McLaughlin	1-L	1336 FROM (N)(S) SEC LINE 2173 FROM (E)(W) SEC LINE SEC. 4 T. 46 N.R. 33W	K.R.E.D.	620'	O	07/13/1983	08/03/1983	604' of 4 1/2" casing cemented to surface, 1 1/2" insert pump, 5' barrel
McLaughlin	2-M	1610 FROM (N)(S) SEC LINE 2235 FROM (E)(W) SEC LINE SEC. 4 T. 46 N.R. 33W	K.R.E.D.	592'	O	10/21/1991	03/17/1992	549' of 2 7/8" casing cemented to surface, 1 1/2" insert pump
McLaughlin	2-K	1571 FROM (N)(S) SEC LINE 2356 FROM (E)(W) SEC LINE SEC. 4 T. 46 N.R. 33W	K.R.E.D.	629'	I	01/02/1985	U	611' of 2 7/8" casing cemented to surface, 1/2" pump
McLaughlin	3-E	1725 FROM (N)(S) SEC LINE 2095 FROM (E)(W) SEC LINE SEC. 4 T. 46 N.R. 33W	K.R.E.D.	635'	O	09/22/1982	U	623' of 4 1/2" casing cemented to surface

AREA OF REVIEW WELLS (1/2 MILE RADIUS AROUND WELL) THAT PENETRATE THE INJECTION INTERVAL

INSTRUCTIONS

In the grid below, place the descriptions of area of review wells (1/2 mile radius around well) of public record that penetrate the proposed injection zone. Complete the following: lease name, well number, location, owner, depth in feet, type of well (Oil = O, Gas = G, Water = W, Injection = I, Strat Test = S, Unknown = U, Other - specify), date spudded, date completed, and construction of the well. Give a brief but accurate description of the well's construction including all plugging and/or completion of information, detailing the cement, casing, and subsurface casing information.

LEASE	WELL NO.	LOCATION	OWNER	DEPTH	TYPE	DATE SPUDDED	DATE COMPLETED	CONSTRUCTION
McLaughlin	3-G	1740 FROM (N)(S) SEC LINE 2340 FROM (E)(W) SEC LINE SEC. 4 T. 46 N.R. 33W	K.R.E.D.	620'	O	U	U	600' of 4 1/2" casing cemented to surface
McLaughlin	3-J	1884 FROM (N)(S) SEC LINE 2509 FROM (E)(W) SEC LINE SEC. 4 T. 46 N.R. 33W	K.R.E.D.	620'	O	06/08/1982	U	589' of 2 7/8" casing cemented to surface
McLaughlin	3-L	1911 FROM (N)(S) SEC LINE 2240 FROM (E)(W) SEC LINE SEC. 4 T. 46 N.R. 33W	K.R.E.D.	610'	O	12/17/1984	U	576' of 2 7/8" casing cemented to surface
McLaughlin	4-K	2184 FROM (N)(S) SEC LINE 2362 FROM (E)(W) SEC LINE SEC. 4 T. 46 N.R. 33W	K.R.E.D.	580'	I	06/01/1982	U	576' of 2 7/8" casing cemented to surface
McLaughlin	5-J	2443 FROM (N)(S) SEC LINE 2518 FROM (E)(W) SEC LINE SEC. 4 T. 46 N.R. 33W	K.R.E.D.	546'	O	01/05/1982	02/15/1982	534' of 4 1/2" casing cemented to surface, 1" insert pump
		_____ FROM (N)(S) SEC LINE _____ FROM (E)(W) SEC LINE SEC. _____ T. _____ N.R. _____						
		_____ FROM (N)(S) SEC LINE _____ FROM (E)(W) SEC LINE SEC. _____ T. _____ N.R. _____						
		_____ FROM (N)(S) SEC LINE _____ FROM (E)(W) SEC LINE SEC. _____ T. _____ N.R. _____						
		_____ FROM (N)(S) SEC LINE _____ FROM (E)(W) SEC LINE SEC. _____ T. _____ N.R. _____						

AREA OF REVIEW WELLS (1/2 MILE RADIUS AROUND WELL) THAT PENETRATE THE INJECTION INTERVAL

INSTRUCTIONS

In the grid below, place the descriptions of area of review wells (1/2 mile radius around well) of public record that penetrate the proposed injection zone. Complete the following: lease name, well number, location, owner, depth in feet, type of well (Oil = O, Gas = G, Water = W, Injection = I, Strat Test = S, Unknown = U, Other - specify), date spudded, date completed, and construction of the well. Give a brief but accurate description of the well's construction including all plugging and/or completion of information, detailing the cement, casing, and subsurface casing information.

LEASE	WELL NO.	LOCATION	OWNER	DEPTH	TYPE	DATE SPUDDED	DATE COMPLETED	CONSTRUCTION
Beary	A-52	1165' FROM (N)(S) SEC LINE 1872' FROM (E)(W) SEC LINE SEC. 4 T. 46 N.R. 33W	K.R.E.D.	642'	O	01/08/1981	02/17/1981	628' of 4 1/2" casing cemented to surface
Beary	A-54	1165' FROM (N)(S) SEC LINE 1652' FROM (E)(W) SEC LINE SEC. 4 T. 46 N.R. 33W	K.R.E.D.	640'	O	01/06/1981	02/27/1981	630' of 4 1/2" casing cemented to surface
Beary	A-56	1165' FROM (N)(S) SEC LINE 1432' FROM (E)(W) SEC LINE SEC. 4 T. 46 N.R. 33W	K.R.E.D.	640'	O	12/08/1980	01/21/1981	626' of 4 1/2" casing cemented to surface
Beary	A-58	1165' FROM (N)(S) SEC LINE 1212' FROM (E)(W) SEC LINE SEC. 4 T. 46 N.R. 33W	K.R.E.D.	640'	O	12/02/1980	02/27/1981	630' of 4 1/2" casing cemented to surface
Beary	B-53	356' FROM (N)(S) SEC LINE 1762' FROM (E)(W) SEC LINE SEC. 4 T. 46 N.R. 33W	K.R.E.D.	650'	I	U	U	2 7/8" casing cemented to surface
Beary	B-55	356' FROM (N)(S) SEC LINE 1542' FROM (E)(W) SEC LINE SEC. 4 T. 46 N.R. 33W	K.R.E.D.	640'	I	12/19/1980	U	629' of 4 1/2" casing cemented to surface
Beary	B-57	354' FROM (N)(S) SEC LINE 1322' FROM (E)(W) SEC LINE SEC. 4 T. 46 N.R. 33W	K.R.E.D.	640'	I	12/15/1980	02/17/1981	628' of 4 1/2" casing cemented to surface
Beary	C-52	546' FROM (N)(S) SEC LINE 1872' FROM (E)(W) SEC LINE SEC. 4 T. 46 N.R. 33W	K.R.E.D.	640'	O	01/14/1981	02/27/1981	628' of 4 1/2" casing cemented to surface
Beary	C-54	546' FROM (N)(S) SEC LINE 1640' FROM (E)(W) SEC LINE SEC. 4 T. 46 N.R. 33W	K.R.E.D.	520'	O	01/29/1981	02/26/1981	463' of 4 1/2" casing cemented to surface

MO 780-1136 (02-11)

AREA OF REVIEW WELLS (1/2 MILE RADIUS AROUND WELL) THAT PENETRATE THE INJECTION INTERVAL

INSTRUCTIONS

In the grid below, place the descriptions of area of review wells (1/2 mile radius around well) of public record that penetrate the proposed injection zone. Complete the following: lease name, well number, location, owner, depth in feet, type of well (Oil = O, Gas = G, Water = W, Injection = I, Strat Test = S, Unknown = U, Other - specify), date spudded, date completed, and construction of the well. Give a brief but accurate description of the well's construction including all plugging and/or completion of information, detailing the cement, casing, and subsurface casing information.

LEASE	WELL NO.	LOCATION	OWNER	DEPTH	TYPE	DATE SPUDDED	DATE COMPLETED	CONSTRUCTION
Beary	C-56	5249' FROM (N)(S) SEC LINE 1432' FROM (E)(W) SEC LINE SEC. 4 T. 46 N.R. 33W	K.R.E.D.	640'	O	12/15/1980	01/27/1981	629' of 4 1/2" casing cemented to surface
Beary	C-58	5491' FROM (N)(S) SEC LINE 1212' FROM (E)(W) SEC LINE SEC. 4 T. 46 N.R. 33W	K.R.E.D.	640'	O	12/16/1980	01/27/1981	629' of 4 1/2" casing cemented to surface
Beary	D-53	738' FROM (N)(S) SEC LINE 1762' FROM (E)(W) SEC LINE SEC. 4 T. 46 N.R. 33W	K.R.E.D.	640'	I	01/22/1981	02/27/1981	628' of 4 1/2" casing cemented to surface
Beary	D-55	787' FROM (N)(S) SEC LINE 1547' FROM (E)(W) SEC LINE SEC. 4 T. 46 N.R. 33W	K.R.E.D.	640'	I	01/09/1981	01/27/1981	628' of 4 1/2" casing cemented to surface
Beary	D-57	742' FROM (N)(S) SEC LINE 1322' FROM (E)(W) SEC LINE SEC. 4 T. 46 N.R. 33W	K.R.E.D.	640'	I	01/13/1981	02/26/1981	628' of 4 1/2" casing cemented to surface
Beary	D-59	742' FROM (N)(S) SEC LINE 1041' FROM (E)(W) SEC LINE SEC. 4 T. 46 N.R. 33W	K.R.E.D.	640'	I	11/03/1981	11/04/1981	635' of 4 1/2" casing cemented to surface
Beary	E-52	928' FROM (N)(S) SEC LINE 1872' FROM (E)(W) SEC LINE SEC. 4 T. 46 N.R. 33W	K.R.E.D.	641'	O	01/22/1981	02/27/1981	628' of 4 1/2" casing cemented to surface
Beary	E-54	931' FROM (N)(S) SEC LINE 1652' FROM (E)(W) SEC LINE SEC. 4 T. 46 N.R. 33W	K.R.E.D.	640'	O	01/19/1981	01/21/1981	629' of 4 1/2" casing cemented to surface
Beary	E-56	934' FROM (N)(S) SEC LINE 1432' FROM (E)(W) SEC LINE SEC. 4 T. 46 N.R. 33W	K.R.E.D.	657'	O	12/18/1980	01/21/1981	630' of 4 1/2" casing cemented to surface

AREA OF REVIEW WELLS (1/2 MILE RADIUS AROUND WELL) THAT PENETRATE THE INJECTION INTERVAL

INSTRUCTIONS

In the grid below, place the descriptions of area of review wells (1/2 mile radius around well) of public record that penetrate the proposed injection zone. Complete the following: lease name, well number, location, owner, depth in feet, type of well (Oil = O, Gas = G, Water = W, Injection = I, Strat Test = S, Unknown = U, Other - specify), date spudded, date completed, and construction of the well. Give a brief but accurate description of the well's construction including all plugging and/or completion of information, detailing the cement, casing, and subsurface casing information.

LEASE	WELL NO.	LOCATION	OWNER	DEPTH	TYPE	DATE SPUDDED	DATE COMPLETED	CONSTRUCTION
Beary	E-58	1354' FROM (N)(S) SEC LINE 1247' FROM (E)(W) SEC LINE SEC. 4 T. 46 N.R. 33W	K.R.E.D.	640'	O	12/18/1980	01/21/1981	627' of 4 1/2" casing cemented to surface
Beary	F-53	1077' FROM (N)(S) SEC LINE 1700' FROM (E)(W) SEC LINE SEC. 4 T. 46 N.R. 33W	K.R.E.D.	960'	U	01/08/1981	03/01/1981	959' of 4 1/2" casing cemented to surface - water disposal well
		_____ FROM (N)(S) SEC LINE _____ FROM (E)(W) SEC LINE SEC. _____ T. _____ N.R. _____						
		_____ FROM (N)(S) SEC LINE _____ FROM (E)(W) SEC LINE SEC. _____ T. _____ N.R. _____						
		_____ FROM (N)(S) SEC LINE _____ FROM (E)(W) SEC LINE SEC. _____ T. _____ N.R. _____						
		_____ FROM (N)(S) SEC LINE _____ FROM (E)(W) SEC LINE SEC. _____ T. _____ N.R. _____						
		_____ FROM (N)(S) SEC LINE _____ FROM (E)(W) SEC LINE SEC. _____ T. _____ N.R. _____						
		_____ FROM (N)(S) SEC LINE _____ FROM (E)(W) SEC LINE SEC. _____ T. _____ N.R. _____						
		_____ FROM (N)(S) SEC LINE _____ FROM (E)(W) SEC LINE SEC. _____ T. _____ N.R. _____						

RECEIVED
JUN 04 2013
Mo Oil & Gas Council

STATE OF MISSOURI
MISSOURI DEPARTMENT OF NATURAL RESOURCES
GEOLOGICAL SURVEY PROGRAM

INJECTION WELL SCHEMATIC

OGC-11

COUNTY	PERMIT NUMBER	OPERATOR	WELL NUMBER
Cass	21202	S & B Operating, LLC	KRI-12

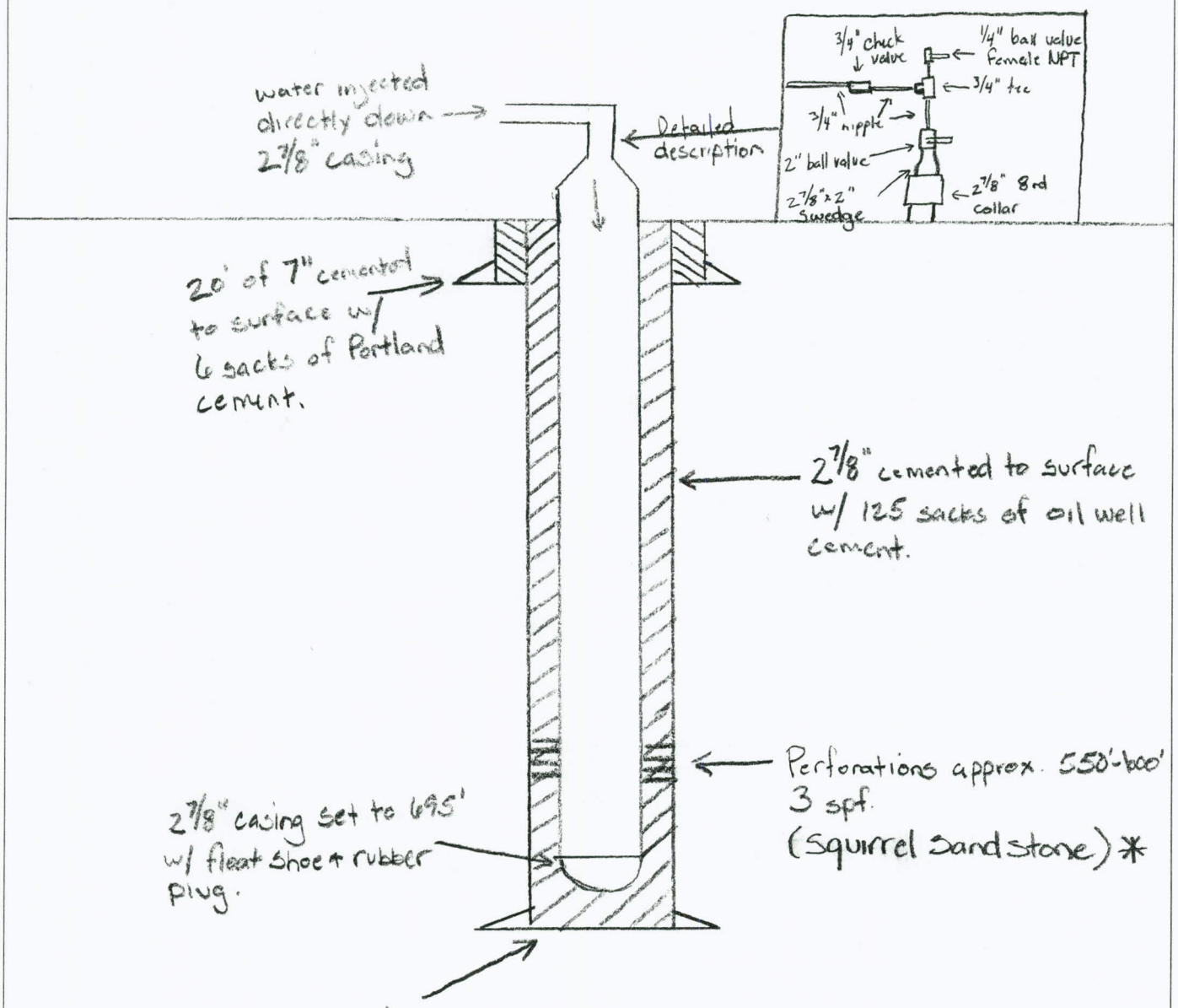

* The Squirrel Sandstone section is confined by Shale & Limestone.

INSTRUCTIONS ON THE ABOVE SPACE DRAW A NEAT, ACCURATE SCHEMATIC DIAGRAM OF THE APPLICANT INJECTION WELL, INCUDING THE FOLLOWING: CONFIGURATION OF WELLHEAD, TOTAL DEPTH OR PLUG BACK TOTAL DEPTH, DEPTH OF ALL INJECTION OR DISPOSAL INTERVALS, AND THEIR FORMATION NAMES, LITHOLOGY OF ALL FORMATIONS PENETRATED, DEPTHS OF THE TOPS AND BOTTOMS OF ALL CASING AND TUBING, SIZE AND GRADE OF ALL CASING AND TUBING, AND THE TYPE AND DEPTH OF PACKER, DEPTH, LOCATION, AND TYPE OF ALL CEMENT, DEPTH OF ALL PERFORATIONS AND SQUEEZE JOBS, AND GEOLOGIC NAME AND DEPTH TO BOTTOM OF ALL UNDERGROUND SOURCES OF DRINKING WATER WHICH MAY BE AFFECTED BY THE INJECTION. USE BACK IF ADDITIONAL SPACE IS NEEDED, OR ATTACH SHEET.

REMIT TWO (2) COPIES TO: GEOLOGICAL SURVEY PROGRAM, PO BOX 250, ROLLA, MO 65402 (573) 368-2143.
ONE (1) COPY WILL BE RETURNED.

Well Schematic, Continued

The surface casing is 7" in diameter and is new, limited service grade pipe. The 7" is drifted and tested to 7,000 lbs. and weighs 17 lbs. per foot. The surface casing will be set to a minimum depth of 20 feet and extend 6 inches above the surface. Approximately 6 sacks of Portland cement will be circulated to surface and will secure the well and ensure the contents of the well bore is sealed off from sources of drinking water. The production casing is used 2 7/8" EUE upset, drifted and tested to 7,000 lbs. No tubing will be ran in the injection wells, the injection fluid will be injected directly down the 2 7/8" casing. The total depth of the well will be approximately 700 feet drilled with a 5 7/8" bit. A 2 7/8" flapper type float shoe will be set at the base of the 2 7/8" casing pipe (695 feet) with centralizers installed to center the casing inside the well bore for better cement bonding. The 2 7/8" casing will be cemented from 700 feet to surface using a 2 7/8" rubber plug for displacing the cement. Approximately 125 sacks of high-grade Oil Well cement will be used to cement all wells. This cement will ensure that no contents of the pipe will leave the well bore. The top of the 2 7/8" casing will extend approximately one foot above ground level. After the cement has cured and effectively bonded to the 2 7/8" casing, perforations will be made in the Squirrel Sandstone formation from approximately 550-600 feet, depending on where the oil sand is present at this particular location. Wells will be shot with 3 perforations per foot where the squirrel sandstone oil reservoir is present and capable of water injection. No water sources are present at this depth and will not be affected by these perforations or the injection. The relevant sources of drinking water are located less than 20 feet below surface. The 7" surface pipe and durable Portland cement ensures these water sources will remain free from contamination from drilling and injection activity. Other sources of potential usable water may be present, however not always potable, in the Pennsylvanian and Mississippian formations located approximately 150 feet or deeper below the base of the Squirrel Sandstone.

The lithology of all formations penetrated by the wellbore are as follows:

Formation	Total Depth (feet)
Soil	0 – 2
Clay	2 – 4
Lime	4 – 16
Shale	16 – 42
Lime	42 – 54
Shale	54 – 64
Lime	64 – 83
Shale	83 – 113

Lime	113 – 116
Shale	116 – 142
Lime	142 – 173
Shale	173 – 183 (Slate 180 - 182)
Lime	183 – 203
Shale	203 - 205 (Slate 203 - 205)
Lime	205 - 208
Shale	208 – 211
Lime	211 – 217 (Top Pawnee Limestone)
Shale	217 - 399
Lime	399 – 403 (Base Pawnee Limestone)
Shale	403 - 419 (Labette Shale)
Lime	419 - 421
Shale	421 - 438 (Top Fort Scott)
Lime	438 - 442 (Blackjack Creek Limestone)
Shale	442 - 556 (Summit Coal) (Base Fort Scott)
Lime	556 - 557
Shale	557 - 562
Oil Sand	562 - 592 (Squirrel Sandstone)
Shale	592 - 593 (Top Verdigris)
Lime	593 - 594 (Ardmore Limestone)
Shale	594 - 700 (Oakley Shale)

AFFIDAVIT OF PUBLICATION

(Space above for recording information)

STATE OF MISSOURI
COUNTY OF CASS ss.

I, Janis Anslinger, being duly sworn according to law, state that I am the Classified Ad Manager of the Cass County Democrat-Missourian, a weekly newspaper of general circulation in the County of Cass, State of Missouri, where located; which newspaper has been admitted to the Post Office as periodical class matter in the City of Harrisonville, Missouri, the city of publication; which newspaper has been published regularly and consecutively for a period of three years and has a list of bonafide subscribers, voluntarily engaged as such who have paid or agreed to pay a stated price for a subscription for a definite period of time, and that such newspaper has complied with the provisions of Section 493.050, Revised Statutes of Missouri 2000, and Section 59.310, Revised Statutes of Missouri 2000. The affixed notice appeared in said newspaper in the following consecutive issues:

1st Insertion: Vol. 133 No. 7, 30 day of NOV 2012.

2nd Insertion: Vol. _____ No. _____, _____ day of _____ 20____.

3rd Insertion: Vol. _____ No. _____, _____ day of _____ 20____.

4th Insertion: Vol. _____ No. _____, _____ day of _____ 20____.

5th Insertion: Vol. _____ No. _____, _____ day of _____ 20____.

Janis Anslinger

Janis Anslinger, Classified Ad Manager

Subscribed and sworn to before me on this 30 day of NOV, 2012.

Julie M. Hicks

JULIE M. HICKS
Notary Public, Notary Seal
State of Missouri
Cass County
Commission # 09727108
My Commission Expires June 12, 2013

5/4/13

NOTICE

Kansas Resource Exploration & Development, LLC, 9393 W 110th St., Ste. 500, Overland Park, KS, 66210, has applied for 22 injection well permits to be drilled to an approximate depth of 650 feet. Water will be injected into the Squirrel Sandstone formation for an Enhanced Oil Recovery Project at the following locations.

#KRI-1 2,970' from S line/2,310' from E line, Section 9, Township 46N, Range 33W

#KRI-2 2,970' from S line/1,980' from E line, Section 9, Township 46N, Range 33W

#KRI-3 2,970' from S line/1,650' from E line, Section 9, Township 46N, Range 33W

#KRI-4 2,970' from S line/1,320' from E line, Section 9, Township 46N, Range 33W

#KRI-5 3,300' from S line/2,310' from E line, Section 9, Township 46N, Range 33W

#KRI-6 3,300' from S line/1,980' from E line, Section 9, Township 46N, Range 33W

#KRI-7 3,300' from S line/1,650' from E line, Section 9, Township 46N, Range 33W

#KRI-8 3,300' from S line/1,320' from E line, Section 9, Township 46N, Range 33W

#KRI-9 3,630' from S line/2,310' from E line, Section 9, Township 46N, Range 33W

#KRI-10 3,630' from S line/1,980' from E line, Section 9, Township 46N, Range 33W

#KRI-11 3,630' from S line/1,650' from E line, Section 9, Township 46N, Range 33W

#KRI-12 3,630' from S line/1,320' from E line, Section 9, Township 46N, Range 33W

#KRI-13 3,960' from S line/2,310' from E line, Section 9, Township 46N, Range 33W

#KRI-14 3,960' from S line/1,980' from E line, Section 9, Township 46N, Range 33W

#KRI-15 3,960' from S line/1,650' from E line, Section 9, Township 46N, Range 33W

#KRI-16 3,960' from S line/1,320' from E line, Section 9, Township 46N, Range 33W

#KRI-17 4,290' from S line/2,310' from E line, Section 9, Township 46N, Range 33W

#KRI-18 4,290' from S line/1,980' from E line, Section 9, Township 46N, Range 33W

#KRI-19 4,290' from S line/1,650' from E line, Section 9, Township 46N, Range 33W

#KRI-20 4,290' from S line/1,320' from E line, Section 9, Township 46N, Range 33W

#KRI-21 4,620' from S line/2,310' from E line, Section 9, Township 46N, Range 33W

#KRI-22 4,620' from S line/1,980' from E line, Section 9, Township 46N, Range 33W

Written comments or requests for additional information regarding such wells should be directed within fifteen (15) days of this notice to the address below.

State Geologist
Missouri Oil & Gas Council
P.O. Box 250
Rolla, MO 65401

7-1tc

MISSOURI
Mechanical Integrity Test

RECEIVED
AUG 22 2013
Mo Oil & Gas Council

Test Date: 8/13/2013

Operator: S & B Operating, LLC
Address: 9393 W. 110th St., Ste. 500
Overland Park, Kansas 66210
Contact: Brad Kramer
Phone: 913-669-2253

Lease: Benjamin *Well No.:* KRI-12
County: Cass *Permit No.:* 037-21202

TEST INFORMATION

Pressure [X] Radioactive Tracer Survey [ ] Temperature Survey [ ]

	Run #1	Run #2	Run #3	Run #4
Start Time:	4:30			
End Time:	5:00			
Length of Test:	30 min			
Initial Pressure (PSI):	800			
Ending Pressure (PSI):	790			
Pressure Change:	10 #			

Fluid Used For Test (water, nitrogen, CO2, etc.): Air

Perforations: Well Not Perfed Yet

Comments: X .433 =
Pressured Casing up to 800 #

The bottom of the tested zone is shut in with Rubber Plug at a depth of 1088.70 feet.
In signing the form below, it is certified that the above indicated well was tested for mechanical integrity on the test date shown above.

Signature David Nelson — Operator, Contact Person or Approved Agent

Contractor — Title

FOR INTERNAL USE ONLY

Results were: Satisfactory____ Not Satisfactory____ Computer Update: ____
Remarks: _____
State Agent: _____ Witnessed: Yes____ No____
!! FILE WITH PERMIT !!

STATE OF MISSOURI
MISSOURI DEPARTMENT OF NATURAL RESOURCES
GEOLOGICAL SURVEY PROGRAM

FORM OGC-5

WELL COMPLETION OR RECOMPLETION REPORT AND WELL LOG

☒ NEW WELL ☐ WORKOVER ☐ DEEPEN ☐ PLUG BACK ☒ INJECTION ☐ SAME RESERVOIR ☐ DIFFERENT RESERVOIR ☐ OIL ☐ GAS ☐ DRY

OWNER: S & B Operating LLC	ADDRESS: 9393 W. 110th Ste 500 OP. KS 66210
LEASE NAME: Benjamin	WELL NUMBER: KR1-12

LOCATION OF WELL: Sec. 9 Twp 46 North, Rng 33 ☐ East ☒ West OR 1650 ft. from ☒ North ☐ South 1320 ft. from ☒ East ☐ West

LATITUDE	LONGITUDE
N38 49' 36.66"	W94 34' 14.62"

COUNTY	PERMIT NUMBER (OGC-3 OR OGC-31)
Cass	037-21202

DATE SPUDDED	DATE TOTAL DEPTH REACHED	DATE COMPLETED READY TO PRODUCE OR INJECT	ELEVATION (DF, RKR, RT, OR Gr.) FEET	ELEVATION OF CASING HD. FLANGE
7.6.13	7.7.13	9.16.13	1076	1076 FEET

TOTAL DEPTH	PLUG BACK TOTAL DEPTH

PRODUCING OR INJECTION INTERVAL(S) FOR THIS COMPLETION	ROTARY TOOLS USED (INTERVAL)	CABLE TOOLS USED (INTERVAL)
587-597	0 TO 700 DRILLING FLUID USED	N/A

WAS THIS WELL DIRECTIONALLY DRILLED?	WAS DIRECTIONAL SURVEY MADE?	WAS COPY OF DIRECTIONAL SURVEY FILED?	DATE FILED
☐ Yes ☒ No	☐ Yes ☒ No	☐ Yes ☒ No	

TYPE OF ELECTRICAL OR OTHER LOGS RUN (JUST LOGS FILED WITH THE STATE GEOLOGIST): Gamma Ray. Neutron. CLL — DATE FILED: 6.1.14

CASING RECORD

CASING (REPORT ALL STRINGS SET IN WELL – CONDUCTOR, SURFACE, INTERMEDIATE, PRODUCING, ETC.

PURPOSE	SIZE HOLE DRILLED	SIZE CASING SET	WEIGHT (LB. FT)	DEPTH SET	SACKS CEMENT	AMOUNT PULLED
Surface	9.875	7	17#	21.9	6	0
Longstring	5.875	2.875	6.5#	700	77	0

TUBING RECORD

SIZE	DEPTH SET	PACKER SET AT	SIZE
2.875 INCH	700 FEET	N/A FEET	N/A INCH

LINER RECORD

TOP	BOTTOM	SACKS CEMENT	SCREEN
N/A FEET	N/A FEET	N/A	N/A FEET

PERFORATION RECORD

NUMBER PER FEET	SIZE AND TYPE	DEPTH INTERVAL
3	2" DML RTG	587-597

ACID, SHOT, FRACTURE, CEMENT SQUEEZE RECORD

AMOUNT AND KIND OF MATERIAL USED	DEPTH INTERVAL
150 gal 7.5% HCL	581-597

INITIAL PRODUCTION

DATE OF FIRST PRODUCTION OR INJECTION	PRODUCING METHOD (INDICATE IF FLOWING, GAS LIFT, OR PUMPING – IF PUMPING, SHOW SIZE AND TYPE OF PUMP.)
9.16.13	

DATE OF TEST	HOURS TESTED	CHOKE SIZE	OIL PRODUCED DURING TEST BBLS	GAS PRODUCED DURING TEST MCF	WATER PRODUCED DURING TEST BBLS	OIL GRAVITY API (CORR.)

TUBING PRESSURE	CASING PRESSURE	CALCULATED RATE OF PRODUCTION PER 24 HOURS	OIL BBLS	GAS MCF	WATER BBLS	GAS OIL RATIO

DISPOSITION OF GAS (STATE WHETHER VENTED, USED FOR FUEL OR SOLD):

METHOD OF DISPOSAL OF MUD PIT CONTENTS: Air dry

CERTIFICATE: I, the Undersigned, state that I am the CEO of the S & B Operating (Company), and that I am authorized by said company to make this report, and that this report was prepared under my supervision and direction and that the facts stated therein are true, correct and complete to the best of my knowledge.

DATE	SIGNATURE
6.1.14	

Benjamin KBA-12

Thickness	Formation	Comment	Depth	Thickness	Formation	Comment	Depth
11	Soil		11	8	Sand	Bleeding	610
19	Lime		30	5	Sand	white	615
32	Shale		62	7	CER	Shale + Sand Base Squirrel	622
8	Lime		70	78	Shale	Verdigris, Oakley	700
24	Shale		94			T.D 700	
5	Lime		99				
13	Shale		112				
2	Lime		114				
21	Shale		135				
2	Lime		137				
24	Shale		161				
29	Lime		190				
8	Shale		198				
18	Lime		216				
3	Shale		219				
4	Lime		223				
3	Shale		226				
7	Lime	KC	233	Base Pawnee lime			
181	Shale		414	Cabette Shale			
9	Lime		423	Higginsville lime			
7	Shale		430	Summit Coal			
11	Lime		441				
15	Shale		456				
3	Lime		459	Blackjack creek lime			
107	Shale		566	Mulky Coal			
4	Shale	CER	570				
3	Shale		573				
3	Shale		576				
2	Sand	OIL	578	Top Squirrel			
2	Sand	BAD.	580				
4	Shale		584				
1	Bk Sand		585				
10.5	Sand	OIL	595.5				
4	Sand	Drilled	599.5				
25	"	" "	602				