Entd. 7/16/07

STATE OF MISSOURI
MISSOURI DEPARTMENT OF NATURAL RESOURCES
GEOLOGICAL SURVEY PROGRAM

JUN 19 2007

FORM OGC-3

APPLICATION FOR PERMIT TO DRILL, DEEPEN OR PLUG BACK

☒ APPLICATION TO DRILL ☐ DEEPEN ☐ PLUG BACK ☐ FOR AN OIL WELL ☐ OR GAS WELL

NAME OF COMPANY OR OPERATOR		DATE	
D.E. Exploration, Inc.		6/15/2007	
ADDRESS	CITY	STATE	ZIP CODE
P.O. Box 128	Wellsville	KS	66092

DESCRIPTION OF WELL AND LEASE

NAME OF LEASE	WELL NUMBER	ELEVATION (GROUND
Belton Unit-Abbey Dunlap	#ADI-30	1079

WELL LOCATION (GIVE FOOTAGE FROM SECTION LINES)

880 ft. from ☐ North ☒ South section line 2200 ft. from ☒ East ☐ West section line

WELL LOCATION	LATITUDE	LONGITUDE	COUNTY
Sec. 9 Township 46 North Range 33 ☐ East ☒ West	NA	NA	Cass

NEAREST DISTANCE FROM PROPOSED LOCATION TO PROPERTY OR LEASE LINE 440 FEET

DISTANCE FROM PROPOSED LOCATION TO NEAREST DRILLING, COMPLETED OR APPLIED – FOR WELL ON THE SAME LEASE 300 FEET

PROPOSED DEPTH	DRILLING CONTRACTOR, NAME AND ADDRESS	ROTARY OR CABLE TOOLS	APPROX. DATE WORK WILL START
700'	Evans Energy Development, Inc.	Rotary	6/20/2007

NUMBER OF ACRES IN LEASE: 560

NUMBER OF WELLS ON LEASE INCLUDING THIS WELL, COMPLETED IN OR DRILLING TO THIS RESERVOIR 61

NUMBER OF ABANDONED WELLS ON LEASE 0

IF LEASE PURCHASED WITH ONE OR MORE WELLS DRILLED, FROM WHOM PURCHASED?

NAME E.W. Stallings/Western Engineering

ADDRESS _____

NO. OF WELLS: PRODUCING 32; INJECTION 14; INACTIVE 15; ABANDONED 0

STATUS OF BOND	☐ SINGLE WELL AMOUNT $ _____	☒ BLANKET BOND AMOUNT $ 40000.00	☒ ON FILE ☐ ATTACHED

REMARKS: (IF THIS IS AN APPLICATION TO DEEPEN OR PLUG BACK, BRIEFLY DESCRIBE WORK TO BE DONE, GIVING PRESENT PRODUCING/INJECTION ZONE AND EXPECTED NEW INJECTION ZONE; USE BACK OF FORM IF NEEDED)

PROPOSED CASING PROGRAM				APPROVED CASING – TO BE FILLED IN BY STATE GEOLOGIST			
AMOUNT	SIZE	WT/FT	CEMENT	AMOUNT	SIZE	WT/FT	CEMENT
700'	4 1/2"		~~700'~~ 114	~~114sk~~ 700	4½		114 sx Portland to Surface

I, the Undersigned, state that I am the President of the D.E. Exploration, Inc. (Company), and that I am authorized by said company to make this report, and that this report was prepared under my supervision and direction and that the facts stated therein are true, correct, and complete to the best of my knowledge.

SIGNATURE [signature] DATE 6/15/2007

PERMIT NUMBER 20802

APPROVED DATE 7-11-07

APPROVED BY [signature]

☒ DRILLER'S LOG REQUIRED
☒ CORE ANALYSIS REQUIRED IF RUN
☐ SAMPLES REQUIRED
☒ SAMPLES NOT REQUIRED
☐ WATER SAMPLES REQUIRED AT

☒ E-LOGS REQUIRED IF RUN
☒ DRILL SYSTEM TEST INFO REQUIRED IF RUN

RECEIVED
JUN 19 2007
No Oil & Gas Council

NOTE ▶ THIS PERMIT NOT TRANSFERABLE TO ANY OTHER PERSON OR TO ANY OTHER LOCATION.

APPROVAL OF THIS PERMIT BY THE OIL AND GAS COUNCIL DOES NOT CONSTITUTE ENDORSEMENT OF THE GEOLOGIC MERITS OF THE PROPOSED WELL NOR ENDORSEMENT OF THE QUALIFICATIONS OF THE PERMITTEE

I, _____ of the _____ (Company), confirm that an approved drilling permit has been obtained by the owner of this well. Council approval of this permit will be shown on this form by presence of a permit number and signature of authorized council representative.

DRILLER'S SIGNATURE DATE

JUN 19 2007

I Scott A. Evans of the Evans Energy Development Inc.

Company confirm that an approved drilling permit has been obtained by the owner of this well Council approval of this permit will be shown on this form by presence of a permit number and signature of authorized Council representative.

DRILLER'S SIGNATURE	DATE
Scott A. Evans	6-15-07

RECEIVED

JUN 19 2007

Colo Oil & Gas Council

RECEIVED

APR 17 2008

Mo Oil & Gas Council

FORM OGC-3I

STATE OF MISSOURI
MISSOURI DEPARTMENT OF NATURAL RESOURCES
GEOLOGICAL SURVEY PROGRAM

INJECTION WELL PERMIT APPLICATION

(TO DRILL, DEEPEN, PLUG BACK, OR CONVERT AN EXISTING WELL) **Conversion** Oil to Injector

NOTE ▶ Permit approval **for drilling only, not injection.** Approval or denial for injection determined after Mechanical Integrity Test results reviewed and official notification given.

☐ APPLICATION TO DRILL ☐ DEEPEN ☐ PLUG BACK ☐ FOR AN OIL WELL ☐ OR GAS WELL

NAME OF COMPANY OR OPERATOR			DATE
D.E. Exploration, Inc.			April 15, 2008
ADDRESS	**CITY**	**STATE**	**ZIP CODE**
P.O. Box 128	Wellsville	KS	66092

DESCRIPTION OF WELL AND LEASE

NAME OF LEASE	WELL NUMBER	ELEVATION (GROUND
Belton Unit-Abbey Dunlap	#ADI-30	1079

WELL LOCATION (GIVE FOOTAGE FROM SECTION LINES)

880 ft. from ☐ North ☒ South section line 2200 ft. from ☒ East ☐ West section line

WELL LOCATION	LATITUDE	LONGITUDE	COUNTY
Sec. 9 Township 46 North Range 33 ☐ East ☒ West	NA	NA	Cass

NEAREST DISTANCE FROM PROPOSED LOCATION TO PROPERTY OR LEASE LINE 440 FEET

DISTANCE FROM PROPOSED LOCATION TO NEAREST DRILLING, COMPLETED OR APPLIED – FOR WELL ON THE SAME LEASE 300 FEET

PROPOSED DEPTH	ROTARY OR CABLE TOOLS	DRILLING CONTRACTOR, NAME AND ADDRESS	APPROX. DATE WORK WILL START
700'	Rotary	Evans Energy Development, Inc.	6/20/2007

NUMBER OF ACRES IN LEASE: 560

NUMBER OF WELLS ON LEASE INCLUDING THIS WELL, COMPLETED IN OR DRILLING TO THIS RESERVOIR 61

NUMBER OF ABANDONED WELLS ON LEASE 0

IF LEASE PURCHASED WITH ONE OR MORE WELLS DRILLED, FROM WHOM PURCHASED?

NAME E.W. Stallings/Western Engineering

ADDRESS _____

NO. OF WELLS: PRODUCING 32; INJECTION 14; INACTIVE 15; ABANDONED 0

STATUS OF BOND			
	☐ SINGLE WELL AMOUNT $ _____	☒ BLANKET BOND AMOUNT $ 40000.00	☒ ON FILE ☐ ATTACHED

REMARKS: (IF THIS IS AN APPLICATION TO DEEPEN OR PLUG BACK, BRIEFLY DESCRIBE WORK TO BE DONE, GIVING PRESENT PRODUCING/INJECTION ZONE AND EXPECTED NEW INJECTION ZONE; USE BACK OF FORM IF NEEDED)

PROPOSED CASING PROGRAM				APPROVED CASING – TO BE FILLED IN BY STATE GEOLOGIST			
AMOUNT	SIZE	WT/FT	CEM.	AMOUNT	SIZE	WT/FT	CEM.
700'	4 1/2"		114	700'	4 1/2"		114 sacks to surface

I, the Undersigned, state that I am the President of the D.E. Exploration, Inc. (Company), and that I am authorized by said company to make this report, and that this report was prepared under my supervision and direction and that the facts stated therein are true, correct, and complete to the best of my knowledge.

SIGNATURE Douglas A. Evans DATE April 15, 2008

PERMIT NUMBER 20802

APPROVED DATE 5-1-08

APPROVED BY

☒ DRILLER'S LOG REQUIRED
☒ CORE ANALYSIS REQUIRED IF RUN
☐ SAMPLES REQUIRED
☒ SAMPLES NOT REQUIRED
☐ WATER SAMPLES REQUIRED AT _____
☒ E-LOGS REQUIRED IF RUN
☒ DRILL SYSTEM TEST INFO REQUIRED IF RUN

NOTE ▶ THIS PERMIT NOT TRANSFERABLE TO ANY OTHER PERSON OR TO ANY OTHER LOCATION. APPROVAL OF THIS PERMIT BY THE OIL AND GAS COUNCIL DOES NOT CONSTITUTE ENDORSEMENT OF THE GEOLOGIC MERITS OF THE PROPOSED WELL NOR ENDORSEMENT OF THE QUALIFICATIONS OF THE PERMITTEE

MO 780-0212 (6-06) REMIT TWO (2) COPIES TO: GEOLOGICAL SURVEY PROGRAM, PO BOX 250, ROLLA, MO 65402 573/ 368-2143.

#20802

ONE (1) COPY WILL BE RETURNED.

RECEIVED
APR 17 2008
Oil & Gas Council

I, Scott Evans of the Evans Energy Development, Inc. (Company), confirm that an approved drilling permit has been obtained by the owner of this well. Council approval of this permit will be shown on this form by presence of a permit number and signature of authorized council representative.

DRILLER'S SIGNATURE Scott G. Evans Pres. EEDI | DATE April 15, 2008

PROPOSED OPERATIONS DATA

PROPOSED AVERAGE DAILY INJECTION,	PRESSURE 300 PSIG, RATE 300 BPD/GPM, VOLUME 100 BBL/GAL
APPROVED AVERAGE DAILY INJECTION, (TO BE FILLED IN BY STATE GEOLOGIST)	PRESSURE _____ PSIG, RATE _____ BPD/GPM, VOLUME _____ BBL/GAL
PROPOSED MAXIMUM DAILY INJECTION,	PRESSURE 300 PSIG, RATE 300 BPD/GPM, VOLUME 100 BBL/GAL
APPROVED MAXIMUM DAILY INJECTION, (TO BE FILLED IN BY STATE GEOLOGIST)	PRESSURE _____ PSIG, RATE _____ BPD/GPM, VOLUME _____ BBL/GAL

ESTIMATED FRACTURE PRESSURE GRADIENT OF INJECTION ZONE _____ PSI/FOOT

DESCRIBE THE SOURCE OF THE INJECTION FLUID Return water and fresh water

NOTE ▶ SUBMIT AN APPROPRIATE ANALYSIS OF THE INJECTION FLUID. (SUBMIT ON SEPARATE SHEET)

DESCRIBE THE COMPATIBILITY OF THE PROPOSED INJECTION FLUID WITH THAT OF THE RECEIVING FORMATIONS, INCLUDIUNG TOTAL DISSOLVED SOLIDS COMPARISONS

We have been using these injection fluids since the waterflood began with no problems.

GIVE AN ACCURATE DESCRIPTION OF THE INJECTION ZONE INCLUDING LITHOLOGIC DESCRIPTIONS, GEOLOGIC NAME, THICKNESS, DEPTH, POROSITY, AND PERMEABILITY.

Squirrel depth is 516'-615' with a thickness of 99'. Permeability of 270.8 millidarcy's and perosity of 22%.

GIVE AN ACCURATE DESCRIPTION OF THE CONFINING ZONES INCLUDING LITHOLOGIC DESCRIPTION, GEOLOGIC NAME, THICKNESS, DEPTH, POROSITY, AND PERMEABILITY.

Squirrel depth is 515'-615' with a thickness of 99'. Permeability of 270.8 millidarcy's and perosity of 22%.

SUBMIT ALL AVAILABLE LOGGING AND TESTING DATA ON THE WELL

GIVE A DETAILED DESCRIPTION OF ANY WELL NEEDING CORRECTIVE ACTION THAT PENETRATES THE INJECTION ZONE IN THE AREA OF REVIEW (1/2 MILE RADIUS AROUND WELL). INCLUDE THE REASON FOR AND PROPOSED CORRECTIVE ACTION.

No corrective acation is needed.

REMIT TWO (2) COPIES TO: GEOLOGICAL SURVEY PROGRAM, PO BOX 250, ROLLA, MO 65402 573/ 368-2143.
ONE (1) COPY WILL BE RETURNED.

STATE OF MISSOURI
MISSOURI DEPARTMENT OF NATURAL RESOURCES
GEOLOGICAL SURVEY PROGRAM

INJECTION WELL LOCATION PLAT

JUN 19 2007

FORM OGC-41

OWNER'S NAME
D.E. Exploration, Inc.

LEASE NAME
Belton Unit-Abbey Dunlap #ADI-30

COUNTY
Cass

WELL LOCATION (GIVE FOOTAGE FROM SECTION LINES)
880 ft. from ☐ North ☒ South section line 2200 ft. from ☒ East ☐ West section line

WELL LOCATION
Sec. 9 Township 46 North Range 33 ☐ East ☒ West

LATITUDE
NA

LONGITUDE
NA

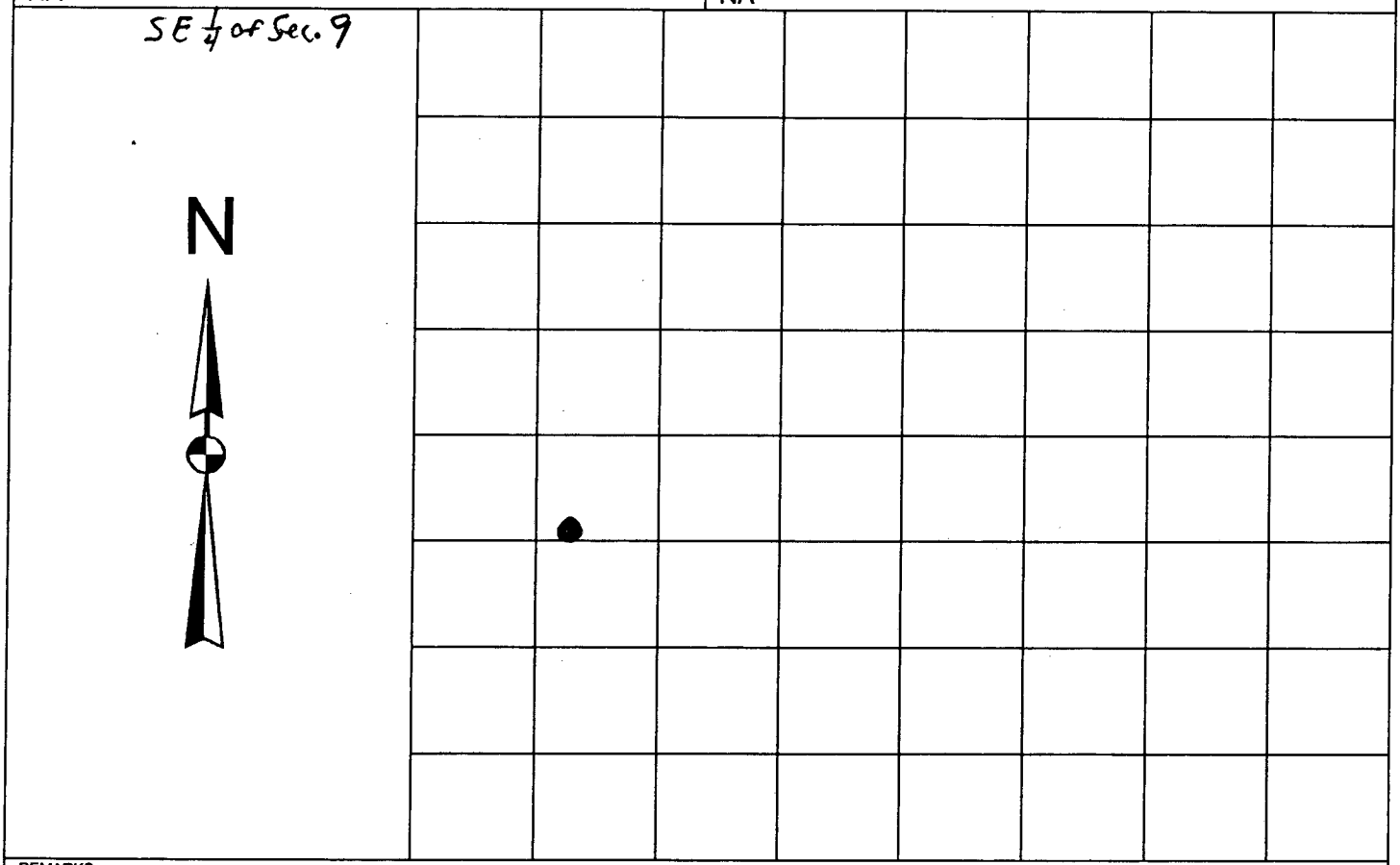

REMARKS
Refer to Map received 6-19-07
Map in Belton Unit - Abbey Dunlap development file JCJ

RECEIVED
JUN 19 2007

INSTRUCTIONS

On the above plat, show distance of the proposed well from the two nearest section lines, the nearest lease line, and from the nearest well on the same lease completed in or drilling to the same reservoir. Do not confuse survey lines with lease lines. See rule 10 CSR 50-2.030 for survey requirements. Lease lines must be marked.

This is to certify that I have executed a survey to accurately locate oil and gas wells in accordance with 10 CSR 50-2.030 and that the results are correctly shown on the above plat.

MO Oil & Gas Council

REGISTERED LAND SURVEY

NUMBER

RECEIVED
APR 17 2008
Mo Oil & Gas Council

FORM OGC-5

STATE OF MISSOURI
MISSOURI DEPARTMENT OF NATURAL RESOURCES
GEOLOGICAL SURVEY PROGRAM

WELL COMPLETION OR RECOMPLETION REPORT AND WELL LOG

☒ NEW WELL ☐ WORKOVER ☐ DEEPEN ☐ PLUG BACK ☐ INJECTION ☐ SAME RESERVOIR ☐ DIFFERENT RESERVOIR ☒ OIL ☐ GAS ☐ DRY

OWNER	ADDRESS
D.E. Exploration, Inc.	P.O. Box 128 Wellsville, KS 66092
LEASE NAME	**WELL NUMBER**
Belton Unit-Abbey Dunlap	#ADI-30 #20802

LOCATION OF WELL SEC TWN RNG OR BLOCK AND SURVEY	LATITUDE	LONGITUDE
Sec. 9 Twp 46 North, Rng 33 ☐East ☒West OR 880 ft. from ☐North ☒South 2200 ft. from ☒East ☐West	NA	NA

COUNTY	PERMIT NUMBER (OGC-3 OR OGC-31)
Cass	20802

DATE SPUDDED	DATE TOTAL DEPTH REACHED	DATE COMPLETED READY TO PRODUCE OR INJECT	ELEVATION (DF, RKR, RT, OR Gr.) FEET	ELEVATION OF CASING HD. FLANGE
12/19/2007	12/21/2007	4/16/2008	1079	NA FEET

TOTAL DEPTH	PLUG BACK TOTAL DEPTH
632.0'	627.7'

PRODUCING OR INJECTION INTERVAL(S) FOR THIS COMPLETION	ROTARY TOOLS USED (INTERVAL) Top TO Bottom DRILLING FLUID USED Fresh	CABLE TOOLS USED (INTERVAL)
Injection		

WAS THIS WELL DIRECTIONALLY DRILLED?	WAS DIRECTIONAL SURVEY MADE?	WAS COPY OF DIRECTIONAL SURVEY FILED?	DATE FILED
☐ Yes ☒ No	☐ Yes ☒ No	☐ Yes ☒ No	

TYPE OF ELECTRICAL OR OTHER LOGS RUN (JUST LOGS FILED WITH THE STATE GEOLOGIST)	DATE FILED
Gamma Ray/Neuton/CCL	

CASING RECORD

CASING (REPORT ALL STRINGS SET IN WELL – CONDUCTOR, SURFACE, INTERMEDIATE, PRODUCING, ETC.

PURPOSE	SIZE HOLE DRILLED	SIZE CASING SET	WEIGHT (LB. FT)	DEPTH SET	SACKS CEMENT	AMOUNT PULLED
Surface	12 1/4"	8 5/8"	NA	20.5'	7 sacks	
Production	6 1/2"	4 1/2"	NA	627.7'	86 sacks	

TUBING RECORD

SIZE	DEPTH SET	PACKER SET AT	SIZE
INCH	627.7' FEET	NA FEET	NA INCH

LINER RECORD

TOP	BOTTOM	SACKS CEMENT	SCREEN
NA FEET	NA FEET		NA FEET

PERFORATION RECORD

NUMBER PER FEET	SIZE AND TYPE	DEPTH INTERVAL
2	3 3/" DP 23 Gr. T. ECG	496.0'-506.0' 554.0'-574.0'
		580.0'-588.0'

ACID, SHOT, FRACTURE, CEMENT SQUEEZE RECORD

AMOUNT AND KIND OF MATERIAL USED	DEPTH INTERVAL
12/20 frac sand	

INITIAL PRODUCTION

DATE OF FIRST PRODUCTION OR INJECTION	PRODUCING METHOD (INDICATE IF FLOWING, GAS LIFT, OR PUMPING – IF PUMPING, SHOW SIZE AND TYPE OF PUMP.)
	NA

DATE OF TEST	HOURS TESTED	CHOKE SIZE	OIL PRODUCED DURING TEST	GAS PRODUCED DURING TEST	WATER PRODUCED DURING TEST	OIL GRAVITY
	NA	NA	NA BBLS	NA MCF	NA BBLS	NA API (CORR.)

TUBING PRESSURE	CASING PRESSURE	CALCULATED RATE OF PRODUCTION PER 24 HOURS	OIL	GAS	WATER	GAS OIL RATIO
NA	NA	NA	NA BBLS	NA MCF	NA BBLS	NA

DISPOSITION OF GAS (STATE WHETHER VENTED, USED FOR FUEL OR SOLD)

Held in with back pressure valve

METHOD OF DISPOSAL OF MUD PIT CONTENTS

Air dried and backfilled.

CERTIFICATE: I, the Undersigned, state that I am the President of the D.E. Exploration, Inc. (Company), and that I am authorized by said company to make this report, and that this report was prepared under my supervision and direction and that the facts stated therein are true, correct and complete to the best of my knowledge.

DATE	SIGNATURE
4-16-08	Douglas Thams

MISSOURI DEPARTMENT OF NATURAL RESOURCES
MISSOURI OIL AND GAS COUNCIL

INJECTION WELL SCHEMATIC

RECEIVED
APR 17 2008
Mo Oil & Gas Council

OGC-11

COUNTY	PERMIT NUMBER	OPERATOR	WELL NUMBER
Cass	20802 ✓	D.E. Exploration, Inc.	#ADI-30

Well Completion

Type: ☐ Tubing & Packer ☐ Packerless ☒ Tubingless

	Conductor	Surface	Intermediate	Production	Tubing
Size		8 5/8"		4 1/2"	
Setting Depth		20.5'		627.7'	
Amount of Cement		7		86	
Top of Cement		Surface		Surface	
Bottom of Cement		20.5'		627.7'	

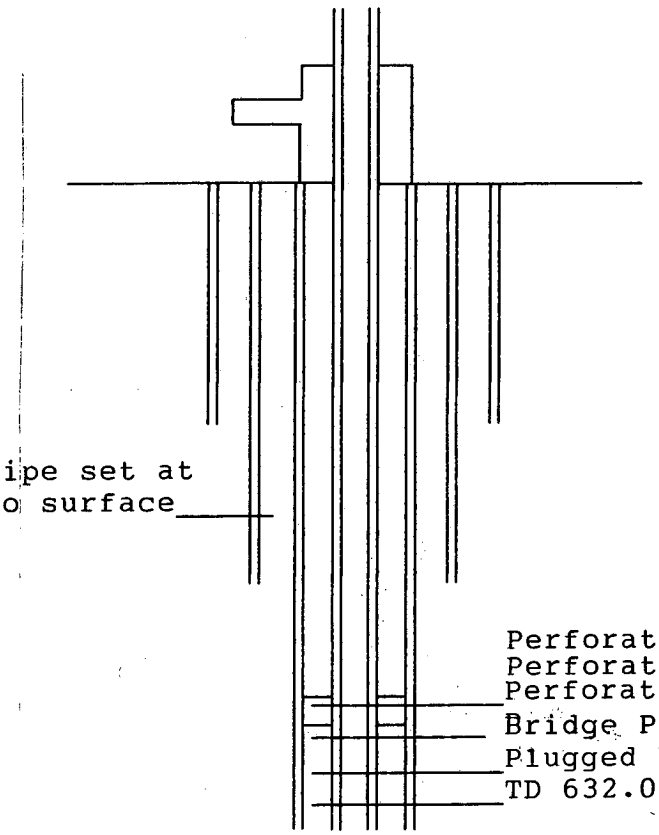

INSTRUCTIONS ON THE ABOVE SPACE DRAW A NEAT, ACCURATE SCHEMATIC DIAGRAM OF THE APPLICANT INJECTION WELL, INCLUDING THE FOLLOWING: CONFIGURATION OF WELL HEAD, TOTAL DEPTH OR PLUG BACK TOTAL DEPTH, DEPTH OF ALL INJECTION OR DISPOSAL INTERVALS, AND THEIR FORMATION NAMES, LITHOLOGY OF ALL FORMATIONS PENETRATED, DEPTHS OF THE TOPS AND BOTTOMS OF ALL CASING AND TUBING, SIZE AND GRADE OF ALL CASING AND TUBING, AND THE TYPE AND DEPTH OF PACKER, DEPTH, LOCATION, AND TYPE OF ALL CEMENT, DEPTH OF ALL PERFORATIONS AND SQUEEZE JOBS, AND GEOLOGIC NAME AND DEPTH TO BOTTOM OF ALL UNDERGROUND SOURCES OF DRINKING WATER WHICH MAY BE AFFECTED BY THE INJECTION. USE BACK IF ADDITIONAL SPACE IS NEEDED, OR ATTACH SHEET.

EVANS ENERGY DEVELOPMENT INC.
11 Lewis Drive Paola, KS 66071

Oil & Gas Well Drilling
Water Wells
Geo-Loop Installation

Phone: 913-557-9083
Fax: 913-557-9084

WELL LOG
Belton Oil Company
Abby Dunlap #ADI 30
Missouri Permit #20802 ✓
December 19 - December 21, 2007

Thickness of Strata	Formation	Total	
6	soil & clay	6	
35	lime	41	
25	shale	66	
10	lime	76	
19	shale	95	
5	lime	100	
59	shale	159	
7	lime	166	
2	shale	168	
10	lime	178	
2	shale	180	
12	lime	192	
7	shale	199	
19	lime	218	
5	shale	223	
3	lime	226	
1	shale	227	
7	lime	234	base of the Kansas City
137	shale	371	
4	lime	375	
25	shale	400	
2	lime	402	
15	shale	417	
11	lime	428	
8	shale	436	
10	lime	446	
4	shale	450	
1	broken sand	451	light brown sand, light bleeding
2	sand	453	brown, good bleeding
12	shale	465	
5	lime	470	
9	shale	479	
2	lime	481	
16	shale	497	
10.5	sand	507.5	light brown, 80% bleeding
14	shale	521.5	
2	sand	523.5	brown, 90%bleeding
6	silty shale	529.5	
3.5	sand	533	light brown, 30% bleeding
6	silty shale	539	
5	broken sand	544	light brown, 30% bleeding sand

#20802

1	shale	545	
4	broken sand	549	
2	shale	551	
2.5	broken sand	553.5	light brown, 20% bleeding sand
19.5	sand	573	light brown, 99% bleeding sand
1	limey sand	574	
3.5	sand	577.5	light brown, 90% bleeding sand
2.5	shale	580	
7	broken sand	587	light brown, 75% bleeding sand
4	sandy shale	591	grey sand & shale, no show
41	shale	632	TD

Drilled a 12 1/4" hole to 21'.
Drilled a 6 1/2" hole to 632'

Set 20.5' of 8 5/8" threaded and coupled with 7 sacks of cement

Set 627.7' of 4 1/2 threaded and coupled including 3 centralizers, 1 float shoe, 1 clamp.

Englevale - Upper Squirrel Core Time

	Minutes	Seconds		Minutes	Seconds		Minutes	Seconds
500	1	0	541		39	581	1	23
501	1	30	542		36	582		54
502	1	25	543		30	583		36
503	1	30	544		22	584		44
504	1	0	545		22	585		43
505		30	546		23	586		31
506		27	547		25	587		36
507		30	548		28	588		31
508		40	549		22	589		32
509		41	550		30	590		29
510		32	551		23	591		42
511	1	0	552		24	592		44
512		49	553		21	593		47
513		33	554		27	594		37
514		34	555		30	595		40
515		47	556		40	596		37
516		35	557		30	597		41
517		40	558		26	598		57
518		37	559		41	599		53
519		47	560		28	600		54
520		40	561		27	601		57
521		38	562		22	602		47
522		36	563		29	603		47
523		46	564		31	604	1	9
524		44	565		31	605		55
525		45	566		32	606	1	0
526		47	567		34	607		38
527		54	568		37	608		32
528		55	569		40	609		52
529		41	570		57	610		34
530		42	571		45	611		35
531		37	572		47	612		49
532		41	573		42	613		42
533		41	574		44	614		55
534		49	575		47	615		46
535		52	576		31	616		40
536		40	577		55	617		44
537		33	578		36	618	1	3
538		45	579		48	619	1	7
539		42	580		39	620	1	10
540		47						

MISSOURI
Mechanical Integrity Test

RECEIVED
APR 17 2008
Oil & Gas Council

Test Date: 3/26/2008

Operator: D. E. Exploration, Inc.
Address: P.O. Box 128
Wellsville, Kansas 66092
Contact: Doug Evans
Phone: 785-883-4057

Lease: Belton Unit *Well No.:* ADI-30
County: Cass *Permit No.:* 20,802

TEST INFORMATION

Pressure [X] Radioactive Tracer Survey [ ] Temperature Survey [ ]

	Run #1	Run #2	Run #3	Run #4
Start Time:	9:35			
End Time:	10:15			
Length of Test:	40 min			
Initial Pressure (PSI):	800			
Ending Pressure (PSI):	800			
Pressure Change:	0			

Fluid Used For Test (water, nitrogen, CO2, etc.): Air

Perforations: Well Not Perforated Yet

Comments: X 433 =
Well Full of Fluid Well Not Perforated Yet

The bottom of the tested zone is shut in with Rubber PLug at a depth of 627.7 feet.
In signing the form below, it is certified that the above indicated well was tested for mechanical integrity on the test date shown above.

Signature S. W. Winchick Contractor
Operator, Contact Person or Approved Agent Title

FOR INTERNAL USE ONLY

Results were: Satisfactory X Not Satisfactory ____ Computer Update: X
Remarks: ____
State Agent: ____ Witnessed: Yes ____ No X 99
!! FILE WITH PERMIT !!

CONSOLIDATED OIL WELL SERVICES, LLC

REMIT TO
Consolidated Oil Well Services, LLC
Dept. 970
P.O. Box 4346
Houston, TX 77210-4346

MAIN OFFICE
P.O. Box 884
Chanute, KS 66720
620/431-9210 • 1-800/467-8676
FAX 620/431-0012

INVOICE

Invoice # 219410

Invoice Date: 12/31/2007 Terms:

Page 1

D.E. EXPLORATION
DOUG EVANS
P.O. BOX 128
WELLSVILLE KS 66092
(785)883-4057

BELTON UNIT #ADI 30 #20802
9-46-33
15926
12/21/07

Part Number	Description	Qty	Unit Price	Total
1124	50/50 POZ CEMENT MIX	86.00	8.8500	761.10
.118B	PREMIUM GEL / BENTONITE	162.00	.1500	24.30
.111	GRANULATED SALT (50 #)	240.00	.3000	72.00
.110A	KOL SEAL (50# BAG)	480.00	.3800	182.40
1404	4 1/2" RUBBER PLUG	1.00	40.0000	40.00
.143	SILT SUSPENDER SS-630,ES	.50	35.4500	17.73
.401	HE 100 POLYMER	.50	43.2500	21.63

	Description	Hours	Unit Price	Total
.95	CEMENT PUMP	1.00	840.00	840.00
.95	EQUIPMENT MILEAGE (ONE WAY)	60.00	3.30	198.00
-106	WATER TRANSPORT (CEMENT)	3.50	100.00	350.00
10	MIN. BULK DELIVERY	1.00	285.00	285.00

arts:	1119.16	Freight:	.00	Tax: 76.10 AR	2868.26
abor:	.00	Misc:	.00	Total: 2868.26	
ublt:	.00	Supplies:	.00	Change: .00	

igned_____ Date_____

CONSOLIDATED OIL WELL SERVICES, INC.
P.O. BOX 884, CHANUTE, KS 66720
620-431-9210 OR 800-467-8676

20802

TICKET NUMBER 15926
LOCATION Ottawa KS
FOREMAN Fred Mader

TREATMENT REPORT & FIELD TICKET
CEMENT

DATE	CUSTOMER #	WELL NAME & NUMBER	SECTION	TOWNSHIP	RANGE	COUNTY
12/21/07	2355	Belton Unit #AD1-30	9	46	33	Cass Missouri

CUSTOMER: DE Exploration
MAILING ADDRESS: P.O. Box 128
CITY: Wellsville | STATE: KS | ZIP CODE: 66092

TRUCK #	DRIVER	TRUCK #	DRIVER
506	Fred		
495	Casey		
510	Brian		
505/T106	Mark		

JOB TYPE Long string HOLE SIZE 6 3/4 HOLE DEPTH 640' CASING SIZE & WEIGHT 4½
CASING DEPTH 624' DRILL PIPE TUBING OTHER
SLURRY WEIGHT SLURRY VOL WATER gal/sk CEMENT LEFT in CASING 4½ Plug
DISPLACEMENT 9.9 BBL DISPLACEMENT PSI MIX PSI RATE 5 BPM

REMARKS: Check Casing depth w/ wireline. Mix + pump ½ Gal ESA-41 + ½ Gal HE100 Polymer. Circulate Evan pit 1 hr to condition hole. Mix + Pump 5 BBL Tell tale dye. Mix + Pump 96 sks 50/50 Por Mix Cement. 2% Gel 5% salt 5# Kol Seal. Flush Pump + lines clean. Displace 4½ rubber plug to casing TD w/ 9.9 BBL Fresh water. Pressure to 680# PSI. Release Pressore to set Float value. Check Plug depth w/ wireline.

Evans Energy Dev Inc. Fred Mader

ACCOUNT CODE	QUANTITY or UNITS	DESCRIPTION of SERVICES or PRODUCT	UNIT PRICE	TOTAL
5401	1	PUMP CHARGE Cement Pump 495		640.00
5406	60 mi	MILEAGE Pump Truck 495		198.00
5407	Minimum	Ton Mileage 510		285.09
5501C	3½ hrs	Transport 505/T106		350.00
1124	86 sks	50/50 Por Mix Cement		761.10
1118B	162#	Premium Gel		24.30
1111	240#	Granulated Salt		72.00
1110A	480#	Kol Seal		182.40
4404	1	4½" Rubber Plug		40.00
1143	½ Gal	ESA-41		17.73
1401	½ Gal	HE-100 Polymer		21.63
		Sub Total		2792.16
		Tax @ 6.8%		76.10
			SALES TAX	
			ESTIMATED TOTAL	2868.26

AUTHORIZATION Jared Hoehn was here TITLE 219410 DATE

RECEIVED
APR 17 2008
Mo Oil & Gas Council

AFFIDAVIT OF PUBLICATION

(Space above for recording information)

STATE OF MISSOURI
COUNTY OF CASS ss.

#20902

I, Sandy M. Nelson, being duly sworn according to law, state that I am the Publisher of The Star-Herald, a weekly newspaper of general circulation in the County of Cass, State of Missouri, where located; which newspaper has been admitted to the Post Office as periodical class matter in the City of Belton, Missouri, the city of publication; which newspaper has been published regularly and consecutively for a period of three years and has a list of bonafide subscribers, voluntarily engaged as such who have paid or agreed to pay a stated price for a subscription for a definite period of time, and that such newspaper has complied with the provisions of Section 493.050, Revised Statutes of Missouri 2000, and Section 59.310, Revised Statutes of Missouri 2000. The affixed notice appeared in said newspaper in the following consecutive issues:

1st Insertion: Vol. 128 No. 8, 21 day of Feb 2008.

2nd Insertion: Vol. _____ No. _____, _____ day of _____ 20____.

3rd Insertion: Vol. _____ No. _____, _____ day of _____ 20____.

4th Insertion: Vol. _____ No. _____, _____ day of _____ 20____.

5th Insertion: Vol. _____ No. _____, _____ day of _____ 20____.

S/ Nelson
Sandy M. Nelson, Publisher

Subscribed and sworn to before me on this 21 day of February, 2008.

Dora E Nation

DORA E. NATION
Notary Public-Notary Seal
State of Missouri, Cass County
Commission # 05460477
My Commission Expires May 5, 2009

NOTICE

D.E. Exploration, Inc. has applied for 4 injection well permits to be drilled to an approximate depth of 700' at the following locations:

#ADI-27 1320' from S. line, 520' from E. line, Section 9, Township 46N, Range 33W.

#ADI-30 880' from S. line, 2200' from E. line, Section 9, Township 46N, Range 33W.

#ADI-37 440' from S. line, 2200' from E. line, Section 9, Township 46N, Range 33W.

#ADI-38 440' from S. line, 1760' from E. line, Section 9, Township 46N, Range 33W.

Written comments or request for additional information regarding such wells should be directed within fifteen (15) days of this notice to the address below.

State Geologist
Missouri Oil & Gas Council
P.O. Box 250
Rolla, MO 65401

Feb. 21, 2008

10007 #

AREA OF REVIEW WELLS (1/2 MILE RADIUS AROUND WELL) THAT PENETRATE THE INJECTION INTERVAL

INSTRUCTIONS

In the grid below, place the descriptions of area of review wells (½ mile radius around well) of public record that penetrate the proposed injection zone. Complete the following: lease name, well number, location, owner, depth in feet, type of well (Oil = O, Gas = G, Water = W, Injection = I, Strat Test = S, Unknown = U, Other - specify), date spudded, date completed, and construction of the well. Give a brief but accurate description of the well's construction including all plugging and/or completion of information, detailing the cement, casing, and subsurface casing information.

LEASE	WELL NO.	LOCATION	OWNER	DEPTH	TYPE	DATE SPUDDED	DATE COMPLETED	CONSTRUCTION
Belton Unit	R-1	569 FROM (N)(S) SEC. LINE 2412 FROM (E)(W) SEC. LINE SEC. 16 T. 46 N.R. 33W	D.E. Exploration Inc.	619'	O	4-8 1999	4-13 1999	4 1/2" casing cemented to surface 2 3/8" tubing 3/4" rods & insert pump
Belton Unit	R-2	1489 FROM (N)(S) SEC. LINE 1624 FROM (E)(W) SEC. LINE SEC. 16 T. 46 N.R. 33W	D.E. Exploration Inc.	600'	O	6-4 1999	6-10 1999	4 1/2" casing cemented to surface 2 3/8" tubing 3/4" rods & insert pump
Belton Unit	R-3	1436 FROM (N)(S) SEC. LINE 2423 FROM (E)(W) SEC. LINE SEC. 16 T. 46 N.R. 33W	D.E. Exploration Inc.	665'	O	2-29 2000	3-2 2000	4 1/2" casing cemented to suface 2 3/8" tubing 3/4" rods & insert pump
Belton Unit	R-4	3232 FROM (N)(S) SEC. LINE 2073 FROM (E)(W) SEC. LINE SEC. 16 T. 46 N.R. 33W	D.E. Exploration Inc.	680'	O	3-2 2000	3-7 2000	4 1/2" casing cemented to surface 2 3/8" tubing 3/4" rods & insert pump
Belton Unit	R-5	168 FROM (N)(S) SEC. LINE 2406 FROM (E)(W) SEC. LINE SEC. 16 T. 46 N.R. 33W	D.E. Exploration Inc.	639'	O	4-23 2000	4-25 2000	4 1/2" casing cemented to surface 2 3/8" tubing 3/4" rods & insert pump
Belton Unit	R-6	171 FROM (N)(S) SEC. LINE 2890 FROM (E)(W) SEC. LINE SEC. 16 T. 46 N.R. 33W	D.E. Exploration Inc.	608'	O	4-27 2000	4-28 2000	4 1/2" casing cemented to surface 2 3/8" tubing 3/4" rods & insert pump
Belton Unit	R-7	571 FROM (N)(S) SEC. LINE 2901 FROM (E)(W) SEC. LINE SEC. 16 T. 46 N.R. 33W	D.E. Exploration Inc.	646'	O	5-1 2000	5-2 2000	4 1/2" casing cemented to surface 2 3/8" tubing 3/4" rods & insert pump
Belton Unit	R-8	1023 FROM (N)(S) SEC. LINE 2894 FROM (E)(W) SEC. LINE SEC. 16 T. 46 N.R. 33W	D.E. Exploration Inc.	655'	O	5-5 2000	5-8 2000	4 1/2" casing cemented to surface 2 3/8" tubing 3/4" rods & insert pump
Belton Unit	R-9	1008 FROM (N)(S) SEC. LINE 2418 FROM (E)(W) SEC. LINE SEC. 16 T. 46 N.R. 33W	D.E. Exploration Inc.	651'	O	5-3 2000	5-5 2000	4 1/2" casing cemented to surface 2 3/8" tubing 3/4" rods & insert pump

MO 780-1136 (9-01)

RECEIVED
APR 17 2008
Oil & Gas Council

AREA OF REVIEW WELLS (1/2 MILE RADIUS AROUND WELL) THAT PENETRATE THE INJECTION INTERVAL

INSTRUCTIONS

In the grid below, place the descriptions of area of review wells (½ mile radius around well) of public record that penetrate the proposed injection zone. Complete the following: lease name, well number, location, owner, depth in feet, type of well (Oil = O, Gas = G, Water = W, Injection = I, Strat Test = S, Unknown = U, Other - specify), date spudded, date completed, and construction of the well. Give a brief but accurate description of the well's construction including all plugging and/or completion of information, detailing the cement, casing, and subsurface casing information.

LEASE	WELL NO.	LOCATION	OWNER	DEPTH	TYPE	DATE SPUDDED	DATE COMPLETED	CONSTRUCTION
Belton Unit	R-10	1005 FROM (N)(S) SEC. LINE 1980 FROM (E)(W) SEC. LINE SEC. 16 T. 46 N.R. 33W	D.E. Exploration Inc.	627'	O	5-15 2000	5-16 2000	4 1/2" casing cemented to surface 2 3/8" tubing 3/4" rods & insert pump
Belton Unit	R-11	567 FROM (N)(S) SEC. LINE 1968 FROM (E)(W) SEC. LINE SEC. 16 T. 46 N.R. 33W	D.E. Exploration Inc.	626'	O	5-10 2000	5-12 2000	4 1/2" casing cemented to surface 2 3/8" tubing 3/4" rods & insert pump
Belton Unit	R-12	162 FROM (N)(S) SEC. LINE 1957 FROM (E)(W) SEC. LINE SEC. 16 T. 46 N.R. 33W	D.E. Exploration Inc.	642'	O	5-16 2000	5-18 2000	4 1/2" casing cemented to suface 2 3/8" tubing 3/4" rods & insert pump
Belton Unit	R-13	1444 FROM (N)(S) SEC. LINE 1983 FROM (E)(W) SEC. LINE SEC. 16 T. 46 N.R. 33W	D.E. Exploration Inc.	620'	O	5-22 2000	5-24 2000	4 1/2" casing cemented to surface 2 3/8" tubing 3/4" rods & insert pump
Belton Unit	R-14	174 FROM (N)(S) SEC. LINE 3330 FROM (E)(W) SEC. LINE SEC. 16 T. 46 N.R. 33W	D.E. Exploration Inc.	637'	O	9-17 2001	9-19 2001	4 1/2" casing cemented to surface 2 3/8" tubing 3/4" rods & insert pump
Belton Unit	R-15	573 FROM (N)(S) SEC. LINE 3335 FROM (E)(W) SEC. LINE SEC. 16 T. 46 N.R. 33W	D.E. Exploration Inc.	621'	O	12-15 2000	12-20 2000	4 1/2" casing cemented to surface 2 3/8" tubing 3/4" rods & insert pump
Belton Unit	R-16	3730 FROM (N)(S) SEC. LINE 2548 FROM (E)(W) SEC. LINE SEC. 16 T. 46 N.R. 33W	D.E. Exploration Inc.	652.5	O	10-13 2003	10-15 2003	4 1/2" casing cemented to surface 2 3/8" tubing 3/4" rods & insert pump
Belton Unit	R-17	3670 FROM (N)(S) SEC. LINE 1671 FROM (E)(W) SEC. LINE SEC. 16 T. 46 N.R. 33W	D.E. Exploration Inc.	686'	O	1-29 2004	1-30 2004	4 1/2" casing cemented to surface 2 3/8" tubing 3/4" rods & insert pump
Belton Unit	R-18	2810 FROM (N)(S) SEC. LINE 1637 FROM (E)(W) SEC. LINE SEC. 16 T. 46 N.R. 33W	D.E. Exploration Inc.	914.5'	O	1-7 2004	1-9 2004	4 1/2" casing cemented to surface 2 3/8" tubing 3/4" rods & insert pump

MO 780-1136 (9-01)

RECEIVED
APR 17 2008
Oil & Gas Council

AREA OF REVIEW WELLS (1/2 MILE RADIUS AROUND WELLS THAT PENETRATE THE INJECTION INTERVAL)

INSTRUCTIONS

In the grid below, place the descriptions of area of review wells (½ mile radius around well) of public record that penetrate the proposed injection zone. Complete the following: lease name, well number, location, owner, depth in feet, type of well (Oil = O, Gas = G, Water = W, Injection = I, Strat Test = S, Unknown = U, Other - specify), date spudded, date completed, and construction of the well. Give a brief but accurate description of the well's construction including all plugging and/or completion of information, detailing the cement, casing, and subsurface casing information.

LEASE	WELL NO.	LOCATION	OWNER	DEPTH	TYPE	DATE SPUDDED	DATE COMPLETED	CONSTRUCTION
Belton Unit	R-19	4132 FROM (N)(S) SEC. LINE 2070 FROM (E)(W) SEC. LINE SEC. 16 T. 46 N.R. 33W	D.E. Exploration Inc.	621.5'	O	2-12 2004	2-13 2004	4 1/2" casing cemented to surface 2 3/8" tubing 3/4" rods & insert pump
Belton Unit	RI-1	368 FROM (N)(S) SEC. LINE 2654 FROM (E)(W) SEC. LINE SEC. 16 T. 46 N.R. 33W	D.E. Exploration Inc.	623'	I	7-26 2000	8-31 2000	4 1/2" casing cemented to surface
Belton Unit	RI-2	795 FROM (N)(S) SEC. LINE 2653 FROM (E)(W) SEC. LINE SEC. 16 T. 46 N.R. 33W	D.E. Exploration Inc.	627'	I	U	U	4 1/2" casing cemented to surface
Belton Unit	RI-3	1217 FROM (N)(S) SEC. LINE 2672 FROM (E)(W) SEC. LINE SEC. 16 T. 46 N.R. 33W	D.E. Exploration Inc.	635'	I	U	U	4 1/2" casing cemented to surface
Belton Unit	RI-4	1222 FROM (N)(S) SEC. LINE 2202 FROM (E)(W) SEC. LINE SEC. 16 T. 46 N.R. 33W	D.E. Exploration Inc.	641'	I	8-25 2000	8-29 2000	4 1/2" casing cemented to surface
Belton Unit	RI-5	790 FROM (N)(S) SEC. LINE 2196 FROM (E)(W) SEC. LINE SEC. 16 T. 46 N.R. 33W	D.E. Exploration Inc.	637'	I	U	U	4 1/2" casing cemented to surface
Belton Unit	RI-6	367 FROM (N)(S) SEC. LINE 2187 FROM (E)(W) SEC. LINE SEC. 16 T. 46 N.R. 33W	D.E. Exploration Inc.	644'	I	U	U	4 1/2" casing cemented to surface
Belton Unit	WSW-1	843 FROM (N)(S) SEC. LINE 3529 FROM (E)(W) SEC. LINE SEC. 16 T. 46 N.R. 33W	D.E. Exploration Inc.	891'	W	4-16 2001	4-17 2001	
Belton Unit	C-18	110 FROM (N)(S) SEC. LINE 4241 FROM (E)(W) SEC. LINE SEC. 16 T. 46 N.R. 33W	D.E. Exploration Inc.	571'	I	U	U	4 1/2" casing cemented to surface

MO 780-1136 (9-01)

RECEIVED
APR 17 2006
Oil & Gas Council

INSTRUCTIONS

In the grid below, place the descriptions of area of review wells (½ mile radius around well) of public record that penetrate the proposed injection zone. Complete the following: lease name, well number, location, owner, depth in feet, type of well (Oil = O, Gas = G, Water = W, Injection = I, Strat Test = S, Unknown = U, Other - specify), date spudded, date completed, and construction of the well. Give a brief but accurate description of the well's construction including all plugging and/or completion of information, detailing the cement, casing, and subsurface casing information.

LEASE	WELL NO.	LOCATION	OWNER	DEPTH	TYPE	DATE SPUDDED	DATE COMPLETED	CONSTRUCTION
Belton Unit	RW-7	374 FROM (N)(S) SEC. LINE 3115 FROM (E)(W) SEC. LINE SEC. 16 T. 46 N.R. 33W	D.E. Exploration Inc.	638'	I	2-10 2004	2-11 2004	4 1/2" casing cemented to surface
Belton Unit	RW-8	3048 FROM (N)(S) SEC. LINE 2714 FROM (E)(W) SEC. LINE SEC. 16 T. 46 N.R. 33W	D.E. Exploration Inc.	641.5	I	2-12 2004	2-13 2004	4 1/2" casing cemented to surface
Belton Unit	RW-9	3505 FROM (N)(S) SEC. LINE 2770 FROM (E)(W) SEC. LINE SEC. 16 T. 46 N.R. 33W	D.E. Exploration Inc.	647.5'	I	1-13 2004	1-15 2004	4 1/2" casing cemented to surface
Belton Unit	RW-10	3055 FROM (N)(S) SEC. LINE 2255 FROM (E)(W) SEC. LINE SEC. 16 T. 46 N.R. 33W	D.E. Exploration Inc.	678'	I	2-2 2004	2-3 2004	4 1/2" casing cemented to surface
Belton Unit	RW-11	3474 FROM (N)(S) SEC. LINE 2303 FROM (E)(W) SEC. LINE SEC. 16 T. 46 N.R. 33W	D.E. Exploration Inc.	652'	I	2-4 2004	2-6 2004	4 1/2" casing cemented to surface
Belton Unit	RW-13	3453 FROM (N)(S) SEC. LINE 1872 FROM (E)(W) SEC. LINE SEC. 16 T. 46 N.R. 33W	D.E. Exploration Inc.	697'	I	2-6 2004	2-9 2004	4 1/2" casing cemented to surface
Belton Unit	R-20	4200 FROM (N)(S) SEC. LINE 2045 FROM (E)(W) SEC. LINE SEC. 16 T. 46 N.R. 33W	D.E. Exploration Inc.	680	O	1-18 2008	1-22 2008	4 1/2" casing cemented to surface 2 3/8" tubing 3/4" rods & insert pump
Belton Unit	R-21	3760 FROM (N)(S) SEC. LINE 2045 FROM (E)(W) SEC. LINE SEC. 16 T. 46 N.R. 33W	D.E. Exploration Inc.	661.1	O	1-14 2008	1-16 2008	4 1/2" casing cemented to surface 2 3/8" tubing 3/4" rods insert pump
Belton Unit	R-24	3320 FROM (N)(S) SEC. LINE 2485 FROM (E)(W) SEC. LINE SEC. 16 T. 46 N.R. 33W	D.E. Exploration Inc.	679.3'	O	1-25 2008	1-29 2008	4 1/2" casing cemented to surface 2 3/8" tubing 3/4" rods insert pump

MO 780-1136 (9-01)

RECEIVED
APR 7 2008
Oil & Gas Cons. Div.

AREA OF REVIEW WELLS (1/2 MILE RADIUS AROUND WELL) THAT PENETRATE THE INJECTION INTERVAL

INSTRUCTIONS

In the grid below, place the descriptions of area of review wells (½ mile radius around well) of public record that penetrate the proposed injection zone. Complete the following: lease name, well number, location, owner, depth in feet, type of well (Oil = O, Gas = G, Water = W, Injection = I, Strat Test = S, Unknown = U, Other - specify), date spudded, date completed, and construction of the well. Give a brief but accurate description of the well's construction including all plugging and/or completion of information, detailing the cement, casing, and subsurface casing information.

LEASE	WELL NO.	LOCATION	OWNER	DEPTH	TYPE	DATE SPUDDED	DATE COMPLETED	CONSTRUCTION
Belton Unit	AD-3	212 FROM (N)(S) SEC. LINE 3806 FROM (E)(W) SEC. LINE SEC. 9 T. 46 N.R. 33W	D.E. Exploration Inc.	637'	O	8-31 1987	U	4 1/2" casing cemented to surface 2 3/8" tubing 3/4" rods & insert pump
Belton Unit	AD-4	220 FROM (N)(S) SEC. LINE 4255 FROM (E)(W) SEC. LINE SEC. 9 T. 46 N.R. 33W	D.E. Exploration Inc.	666'	O	7-14 1987	7-16 1987	4 1/2" casing cemented to surface 2 3/8" tubing 3/4" rods & insert pump
Belton Unit	AD-5	220 FROM (N)(S) SEC. LINE 4716 FROM (E)(W) SEC. LINE SEC. 9 T. 46 N.R. 33W	D.E. Exploration Inc.	679'	O	6-21 1987	6-25 1987	4 1/2" casing cemented to surface 2 3/8" tubing 3/4" rods & insert pump
Belton Unit	AD-8	630 FROM (N)(S) SEC. LINE 3401 FROM (E)(W) SEC. LINE SEC. 9 T. 46 N.R. 33W	D.E. Exploration Inc.	622'	O	5-14 1999	5-27 1999	4 1/2" casing cemented to surface 2 3/8" tubing 3/4" rods & insert pump
Belton Unit	AD-9	644 FROM (N)(S) SEC. LINE 3835 FROM (E)(W) SEC. LINE SEC. 9 T. 46 N.R. 33W	D.E. Exploration Inc.	662'	O	8-25 1987	U 1987	4 1/2" casing cemented to surface 2 3/8" tubing 3/4" rods & insert pump
Belton Unit	AD-10	662 FROM (N)(S) SEC. LINE 4239 FROM (E)(W) SEC. LINE SEC. 9 T. 46 N.R. 33W	D.E. Exploration Inc.	659'	O	5-25 1987	7-21 1987	4 1/2" casing cemented to surface 2 3/8" tubing 3/4" rods & insert pump
Belton Unit	AD-11	621 FROM (N)(S) SEC. LINE 4785 FROM (E)(W) SEC. LINE SEC. 9 T. 46 N.R. 33W	D.E. Exploration Inc.	665'	O	U 1987	U 1987	4 1/2" casing cemented to surface 2 3/8" tubing 3/4" rods & insert pump
Belton Unit	AD-14	1067 FROM (N)(S) SEC. LINE 3405 FROM (E)(W) SEC. LINE SEC. 9 T. 46 N.R. 33W	D.E. Exploration Inc.	609'	O	4-21 1999	5-13 1999	4 1/2" casing cemented to surface 2 3/8" tubing 3/4" rods & insert pump
Belton Unit	AD-15	1210 FROM (N)(S) SEC. LINE 3807 FROM (E)(W) SEC. LINE SEC. 9 T. 46 N.R. 33W	D.E. Exploration Inc.	617'	O	11-13 1989	11-14 1989	4 1/2" casing cemented to surface 2 3/8" tubing 3/4" rods & insert pump

MO 780-1136 (9-01)

RECEIVED
APR 17 2006
Oil & Gas Council

AREA OF REVIEW WELLS (1/2 MILE RADIUS AROUND WELL) THAT PENETRATE THE INJECTION INTERVAL

INSTRUCTIONS

In the grid below, place the descriptions of area of review wells (½ mile radius around well) of public record that penetrate the proposed injection zone. Complete the following: lease name, well number, location, owner, depth in feet, type of well (Oil = O, Gas = G, Water = W, Injection = I, Strat Test = S, Unknown = U, Other - specify), date spudded, date completed, and construction of the well. Give a brief but accurate description of the well's construction including all plugging and/or completion of information, detailing the cement, casing, and subsurface casing information.

LEASE	WELL NO.	LOCATION	OWNER	DEPTH	TYPE	DATE SPUDDED	DATE COMPLETED	CONSTRUCTION
Belton Unit	AD-16	1100 FROM (N)(S) SEC. LINE 4225 FROM (E)(W) SEC. LINE SEC. 9 T. 46 N.R. 33W	D.E. Exploration Inc.	666'	O	7-23 1987	U 1987	4 1/2" casing cemented to surface 2 3/8" tubing 3/4" rods & insert pump
Belton Unit	AD-17	1105 FROM (N)(S) SEC. LINE 4657 FROM (E)(W) SEC. LINE SEC. 9 T. 46 N.R. 33W	D.E. Exploration Inc.	647'	O	U	U	4 1/2" casing cemented to surface 2 3/8" tubing 3/4" rods & insert pump
Belton Unit	AD-21	1535 FROM (N)(S) SEC. LINE 3809 FROM (E)(W) SEC. LINE SEC. 9 T. 46 N.R. 33W	D.E. Exploration Inc.	656'	O	9-11 2003	9-12 2003	4 1/2" casing cemented to surface 2 3/8" tubing 3/4" rods & insert pump
Belton Unit	AD-22	1539 FROM (N)(S) SEC. LINE 4212 FROM (E)(W) SEC. LINE SEC. 9 T. 46 N.R. 33W	D.E. Exploration Inc.	650'	O	6-13 1999	6-18 1999	4 1/2" casing cemented to surface 2 3/8" tubing 3/4" rods & insert pump
Belton Unit	AD-23	1541 FROM (N)(S) SEC. LINE 4644 FROM (E)(W) SEC. LINE SEC. 9 T. 46 N.R. 33W	D.E. Exploration Inc.	644'	O	9-9 2003	9-11 2003	4 1/2" casing cemented to surface 2 3/8" tubing 3/4" rods & insert pump
Belton Unit	AD-28	1979 FROM (N)(S) SEC. LINE 4195 FROM (E)(W) SEC. LINE SEC. 9 T. 46 N.R. 33W	D.E. Exploration Inc.	629'	O	7-8 1999	7-14 1999	4 1/2" casing cemented to surface 2 3/8" tubing 3/4" rods & insert pump
Belton Unit	AD-29	1972 FROM (N)(S) SEC. LINE 4627 FROM (E)(W) SEC. LINE SEC. 9 T. 46 N.R. 33W	D.E. Exploration Inc.	625'	O	6-18 1999	7-7 1999	4 1/2" casing cemented to surface 2 3/8" tubing 3/4" rods & insert pump
Belton Unit	ADI-39	441 FROM (N)(S) SEC. LINE 4055 FROM (E)(W) SEC. LINE SEC. 9 T. 46 N.R. 33W	D.E. Exploration Inc.	631'	I	U	U	4 1/2" casing cemented to surface
Belton Unit	ADI-40	441 FROM (N)(S) SEC. LINE 4465 FROM (E)(W) SEC. LINE SEC. 9 T. 46 N.R. 33W	D.E. Exploration Inc.	664'	I	U	U	4 1/2" casing cemented to surface

MO 780-1136 (9-01)

RECEIVED
APR 17 2006
Oil & Gas Council

AREA OF REVIEW WELLS (1/2 MILE RADIUS AROUND WELL) THAT PENETRATE THE INJECTION INTERVAL

INSTRUCTIONS

In the grid below, place the descriptions of area of review wells (½ mile radius around well) of public record that penetrate the proposed injection zone. Complete the following: lease name, well number, location, owner, depth in feet, type of well (Oil = O, Gas = G, Water = W, Injection = I, Strat Test = S, Unknown = U, Other - specify), date spudded, date completed, and construction of the well. Give a brief but accurate description of the well's construction including all plugging and/or completion of information, detailing the cement, casing, and subsurface casing information.

LEASE	WELL NO.	LOCATION	OWNER	DEPTH	TYPE	DATE SPUDDED	DATE COMPLETED	CONSTRUCTION
Belton Unit	ADI-41	442 FROM (N)(S) SEC. LINE 4909 FROM (E)(W) SEC. LINE SEC. 9 T. 46 N.R. 33W	D.E. Exploration Inc.	app. 600'	I	U	U	4 1/2" casing cemented to surface
Belton Unit	ADI-31	860 FROM (N)(S) SEC. LINE 3613 FROM (E)(W) SEC. LINE SEC. 9 T. 46 N.R. 33W	D.E. Exploration Inc.	633'	I	5-27 1999	6-4 1999	4 1/2" casing cemented to surface
Belton Unit	ADI-32	871 FROM (N)(S) SEC. LINE 4034 FROM (E)(W) SEC. LINE SEC. 9 T. 46 N.R. 33W	D.E. Exploration Inc.	649'	I	U	U	4 1/2" casing cemented to surface
Belton Unit	ADI-33	881 FROM (N)(S) SEC. LINE 4454 FROM (E)(W) SEC. LINE SEC. 9 T. 46 N.R. 33W	D.E. Exploration Inc.	642'	I	U	U	4 1/2" casing cemented to surface
Belton Unit	ADI-34	879 FROM (N)(S) SEC. LINE 4896 FROM (E)(W) SEC. LINE SEC. 9 T. 46 N.R. 33W	D.E. Exploration Inc.	663'	I	U	U	4 1/2" casing cemented to surface
Belton Unit	ADI-24	1354 FROM (N)(S) SEC. LINE 3631 FROM (E)(W) SEC. LINE SEC. 9 T. 46 N.R. 33W	D.E. Exploration Inc.	662'	I	9-16 2003	9-17 2003	4 1/2" casing cemented to surface
Belton Unit	ADI-25	1352 FROM (N)(S) SEC. LINE 3985 FROM (E)(W) SEC. LINE SEC. 9 T. 46 N.R. 33W	D.E. Exploration Inc.	651.5	I	9-12 2003	9-15 1003	4 1/2" casing cemented to surface
Belton Unit	ADI-26	1337 FROM (N)(S) SEC. LINE 4453 FROM (E)(W) SEC. LINE SEC. 9 T. 46 N.R. 33W	D.E. Exploration Inc.	650.5	I	9-17 2003	9-19 2003	4 1/2" casing cemented to surface
Belton Unit	ADI-18	1757 FROM (N)(S) SEC. LINE 4003 FROM (E)(W) SEC. LINE SEC. 9 T. 46 N.R. 33W	D.E. Exploration Inc.	651.5	I	10-9 2003	10-10 2003	4 1/2" casing cemented to surface

MO 780-1136 (9-01)

RECEIVED
APR 17 2008
to Oil & Gas Council

AREA OF REVIEW WELLS (1/2 MILE RADIUS AROUND WELL) THAT PENETRATE THE INJECTION INTERVAL

INSTRUCTIONS

In the grid below, place the descriptions of area of review wells (½ mile radius around well) of public record that penetrate the proposed injection zone. Complete the following: lease name, well number, location, owner, depth in feet, type of well (Oil = O, Gas = G, Water = W, Injection = I, Strat Test = S, Unknown = U, Other - specify), date spudded, date completed, and construction of the well. Give a brief but accurate description of the well's construction including all plugging and/or completion of information, detailing the cement, casing, and subsurface casing information.

LEASE	WELL NO.	LOCATION	OWNER	DEPTH	TYPE	DATE SPUDDED	DATE COMPLETED	CONSTRUCTION
Belton Unit	ADI-19	1758 FROM (N)(S) SEC. LINE 4421 FROM (E)(W) SEC. LINE SEC. 9 T. 46 N.R. 33W	D.E. Exploration Inc.	654.5	I	10-7 2003	10-8 2003	4 1/2" casing cemented to surface
Belton Unit	ADI-27	1320 FROM (N)(S) SEC. LINE 520 FROM (E)(W) SEC. LINE SEC. 9 T. 46 N.R. 33	D.E. Exploration Inc.	674.1	I	1-4 2008	1-9 2008	4 1/2" casing cemented to surface
Belton Unit	ADI 30	880 FROM (N)(S) SEC. LINE 2200 FROM (E)(W) SEC. LINE SEC. 9 T. 46 N.R. 33	D.E. Exploration Inc.	617	I	12-19 2007	12-21 2007	4 1/2" casing cemented to surface
Belton Unit	ADI 37	440 FROM (N)(S) SEC. LINE 2200 FROM (E)(W) SEC. LINE SEC. 9 T. 46 N.R. 33	D.E. Exploration Inc.	618.2	I	12-13 2007	12-17 2007	4 1/2" casing cemented to surface
Belton Unit	ADI 38	440 FROM (N)(S) SEC. LINE 1760 FROM (E)(W) SEC. LINE SEC. 9 T. 46 N.R. 33	D.E. Exploration Inc.	668.9	I	12-17 2007	12-19 2007	4 1/2" casing cemented to surface
Belton Unit	AD 1	220 FROM (N)(S) SEC. LINE 2420 FROM (E)(W) SEC. LINE SEC. 9 T. 46 N.R. 33	D.E. Exploration Inc.	605	O	12-3 2007	12-4 2007	4 1/2" casing cemented to surface 2 3/8" tubing 3/4" rods & insert pump
Belton Unit	AD 2	220 FROM (N)(S) SEC. LINE 2000 FROM (E)(W) SEC. LINE SEC. 9 T. 46 N.R. 33	D.E. Exploration Inc.	642	O	12-6 2007	12-10 2007	4 1/2" casing cemented to surface 2 3/8" tubing 3/4" rods & insert pump
Belton Unit	AD 6	220 FROM (N)(S) SEC. LINE 220 FROM (E)(W) SEC. LINE SEC. 9 T. 46 N.R. 33	D.E. Exploration Inc.	696	O	1-31 2008	2-1 2008	4 1/2" casing cemented to surface 2 3/8" tubing 3/4" rods & insert pump
Belton Unit	AD 7	660 FROM (N)(S) SEC. LINE 2420 FROM (E)(W) SEC. LINE SEC. 9 T. 46 N.R. 33	D.E. Exploration Inc.	619.2	O	12-12 2007	12-13 2007	4 1/2" casing cemented to surface 2 3/8" tubing 3/4" rods & insert pump

MO 780-1136 (9-01)

RECEIVED
APR 17 2008
MO Oil & Gas Council

AREA OF REVIEW WELLS (1/2 MILE RADIUS AROUND WELL) THAT PENETRATE THE INJECTION INTERVAL

INSTRUCTIONS

In the grid below, place the descriptions of area of review wells (½ mile radius around well) of public record that penetrate the proposed injection zone. Complete the following: lease name, well number, location, owner, depth in feet, type of well (Oil = O, Gas = G, Water = W, Injection = I, Strat Test = S, Unknown = U, Other - specify), date spudded, date completed, and construction of the well. Give a brief but accurate description of the well's construction including all plugging and/or completion of information, detailing the cement, casing, and subsurface casing information.

LEASE	WELL NO.	LOCATION	OWNER	DEPTH	TYPE	DATE SPUDDED	DATE COMPLETED	CONSTRUCTION
Belton Unit	AD-12	660 FROM (N)(S) SEC. LINE 220 FROM (E)(W) SEC. LINE SEC. 9 T. 46 N.R. 33	D.E. Exploration Inc.	678.9'	O	1-23 2008	1-25 2008	4 1/2" casing cemented to surface 2 3/8" tubing 3/4" rods & insert pump
Belton Unit	AD-18	1100 FROM (N)(S) SEC. LINE 300 FROM (E)(W) SEC. LINE SEC. 9 T. 46 N.R. 33	D.E. Exploration Inc.	676.5'	O	1-2 2008	1-4 2008	4 1/2" casing cemented to surface 2 3/8" tubing 3/4" rods & insert pump
Belton Unit	AD-24	1540 FROM (N)(S) SEC. LINE 300 FROM (E)(W) SEC. LINE SEC. 9 T. 46 N.R. 33	D.E. Exploration Inc.	672.5'	O	12-27 2007	12-31 2007	4 1/2" casing cemented to surface 2 3/8" tubing 3/4" rods & insert pump
Belton Unit		_____ FROM (N)(S) SEC. LINE _____ FROM (E)(W) SEC. LINE SEC. _____ T. _____ N.R. _____	D.E. Exploration Inc.					4 1/2" casing cemented to surface 2 3/8" tubing 3/4" rods & insert pump
		_____ FROM (N)(S) SEC. LINE _____ FROM (E)(W) SEC. LINE SEC. _____ T. _____ N.R. _____						
		_____ FROM (N)(S) SEC. LINE _____ FROM (E)(W) SEC. LINE SEC. _____ T. _____ N.R. _____						
		_____ FROM (N)(S) SEC. LINE _____ FROM (E)(W) SEC. LINE SEC. _____ T. _____ N.R. _____						
		_____ FROM (N)(S) SEC. LINE _____ FROM (E)(W) SEC. LINE SEC. _____ T. _____ N.R. _____						
		_____ FROM (N)(S) SEC. LINE _____ FROM (E)(W) SEC. LINE SEC. _____ T. _____ N.R. _____						

MO 780-1136 (9-01)

RECEIVED
APR 17 2008
Mo Oil & Gas Council

INSTRUCTIONS

On the grid outside, plot the two endpoints of [illegible] within the [illegible] of any [illegible] that penetrate the proposed injection zone. Complete the following: lease name, well number, location, owner, depth in feet, type of well (Oil = O, Gas = G, Water = W, Injection = I, Strat Test = S, Unknown = U, Other - specify), date spudded, date completed, and construction of the well. Give a brief but accurate description of the well's construction including all plugging and/or completion of information, detailing the cement, casing, and subsurface casing information.

LEASE	WELL NO.	LOCATION	OWNER	DEPTH	TYPE	DATE SPUDDED	DATE COMPLETED	CONSTRUCTION
Clark-berry	CB-1	2840 FROM (N)(S) SEC. LINE 2989 FROM (E)(W) SEC. LINE SEC. 16 T. 46 N.R. 33W	D.E. Exploration Inc.	625'	O	U	U	2 7/8" with 1" hollow tubing & insert pump
Clark-berry	CB-2	3276 FROM (N)(S) SEC. LINE 3006 FROM (E)(W) SEC. LINE SEC. 16 T. 46 N.R. 33W	D.E. Exploration Inc.	625'	O	U	U	2 7/8" with 1" hollow tubing & insert pumpo
Clark-berry	CB-3	3710 FROM (N)(S) SEC. LINE 3022 FROM (E)(W) SEC. LINE SEC. 16 T. 46 N.R. 33W	D.E. Exploration Inc.	625'	O	3-25 1999	3-30 1999	4 1/2" casing cemented to surface 2 3/8" tubing 3/4" rods & insert pump
Clark-berry	CB-4	2818 FROM (N)(S) SEC. LINE 3424 FROM (E)(W) SEC. LINE SEC. 16 T. 46 N.R. 33W	D.E. Exploration Inc.	619'	O	3-30 1999	4-2. 1999	4 1/2" casing cemented to surface 2 3/8" tubing 3/4" rods & insert pump
Clark-berry	CBI-1	3050 FROM (N)(S) SEC. LINE 3211 FROM (E)(W) SEC. LINE SEC. 16 T. 46 N.R. 33W	D.E. Exploration Inc.	629'	I	3-22 1999	3-25 1999	4 1/2" casing cemented to surface
Clark-berry	CBI-2	3487 FROM (N)(S) SEC. LINE 3233 FROM (E)(W) SEC. LINE SEC. 16 T. 46 N.R. 33W	D.E. Exploration Inc.	634'	I	4-2 1999	4-7 1999	4 1/2" casing cemented to surface
		____ FROM (N)(S) SEC. LINE ____ FROM (E)(W) SEC. LINE SEC. ____ T. ____ N.R. ____						
		____ FROM (N)(S) SEC. LINE ____ FROM (E)(W) SEC. LINE SEC. ____ T. ____ N.R. ____						
		____ FROM (N)(S) SEC. LINE ____ FROM (E)(W) SEC. LINE SEC. ____ T. ____ N.R. ____						

MO 780-1136 (9-01)

RECEIVED
APR 17 2008
Oil & Gas Council

AREA OF REVIEW WELLS (1/2 MILE RADIUS AROUND WELL) THAT PENETRATE THE INJECTION INTERVAL

INSTRUCTIONS

In the grid below, place the descriptions of area of review wells (½ mile radius around well) of public record that penetrate the proposed injection zone. Complete the following: lease name, well number, location, owner, depth in feet, type of well (Oil = O, Gas = G, Water = W, Injection = I, Strat Test = S, Unknown = U, Other - specify), date spudded, date completed, and construction of the well. Give a brief but accurate description of the well's construction including all plugging and/or completion of information, detailing the cement, casing, and subsurface casing information.

LEASE	WELL NO.	LOCATION	OWNER	DEPTH	TYPE	DATE SPUDDED	DATE COMPLETED	CONSTRUCTION
Belton Unit	OH-1	2815 FROM (N)(S) SEC. LINE 2406 FROM (E)(W) SEC. LINE SEC. 16 T. 46 N.R. 33W	D.E. Exploration Inc.	App. 600'	O	U	U	4 1/2" casing cemented to surface 2 3/8" tubing 3/4" rods & insert pump
Belton Unit	OH-2	2204 FROM (N)(S) SEC. LINE 3051 FROM (E)(W) SEC. LINE SEC. 16 T. 46 N.R. 33W	D.E. Exploration Inc.	App. 600'	O	U	U	4 1/2" casing cemented to surface 2 3/8" tubing 3/4" rods & insert pump
Belton Unit	OH-3	1937 FROM (N)(S) SEC. LINE 3408 FROM (E)(W) SEC. LINE SEC. 16 T. 46 N.R. 33W	D.E. Exploration Inc.	App. 600'	O	U	U	4 1/2" casing cemented to surface 2 3/8" tubing 3/4" rods & insert pump
Belton Unit	OH-4	1390 FROM (N)(S) SEC. LINE 2878 FROM (E)(W) SEC. LINE SEC. 16 T. 46 N.R. 33W	D.E. Exploration Inc.	App. 600'	O	U	U	4 1/2" casing cemented to surface 2 3/8" tubing 3/4" rods & insert pump
Belton Unit	OH-5	833 FROM (N)(S) SEC. LINE 3124 FROM (E)(W) SEC. LINE SEC. 16 T. 46 N.R. 33W	D.E. Exploration Inc.	App. 600'	O	U	U	4 1/2" casing cemented to surface 2 3/8" tubing 3/4" rods & insert pump
Belton Unit	OH-6	919 FROM (N)(S) SEC. LINE 3716 FROM (E)(W) SEC. LINE SEC. 16 T. 46 N.R. 33W	D.E. Exploration Inc.	App. 600'	O	U	U	4 1/2" casing cemented to surface 2 3/8" tubing 3/4" rods & insert pump
Belton Unit	OH-7	753 FROM (N)(S) SEC. LINE 3666 FROM (E)(W) SEC. LINE SEC. 16 T. 46 N.R. 33W	D.E. Exploration Inc.	App. 600'	O	U	U	4 1/2" casing cemented to surface 2 3/8" tubing 3/4" rods & insert pump
Belton Unit	OH-8	138 FROM (N)(S) SEC. LINE 3971 FROM (E)(W) SEC. LINE SEC. 16 T. 46 N.R. 33W	D.E. Exploration Inc.	App. 600'	O	U	U	4 1/2"" casing cemented to surface 2 3/8" tubing 3/4" rods & insert pump
Belton Unit	OH-9	604 FROM (N)(S) SEC. LINE 5229 FROM (E)(W) SEC. LINE SEC. 9 T. 46 N.R. 33W	D.E. Exploration Inc.	App. 600'	O	U	U	4 1/2" casing cemented to surface 2 3/8" tubing 3/4" rods & insert pump

MO 780-1136 (9-01)

RECEIVED
APR 2008
Oil & Gas Council

STATE OF MISSOURI
MISSOURI DEPARTMENT OF NATURAL RESOURCES
GEOLOGICAL SURVEY PROGRAM

INJECTION WELL LOCATION PLAT

RECEIVED
APR 17 2008
Mo Oil & Gas Council

FORM OGC-41

OWNER'S NAME
D.E. Exploration, Inc. convert Oil to Injection ✓

LEASE NAME
Belton Unit-Abbey Dunlap #ADI-30 #20902

COUNTY
Cass

WELL LOCATION (GIVE FOOTAGE FROM SECTION LINES)
880 ft. from ☐ North ☒ South section line 2200 ft. from ☒ East ☐ West section line

WELL LOCATION
Sec. 9 Township 46 North Range 33 ☐ East ☒ West

LATITUDE
NA

LONGITUDE
NA

REMARKS

INSTRUCTIONS

On the above plat, show distance of the proposed well from the two nearest section lines, the nearest lease line, and from the nearest well on the same lease completed in or drilling to the same reservoir. Do not confuse survey lines with lease lines. See rule 10 CSR 50-2.030 for survey requirements. Lease lines must be marked.

This is to certify that I have executed a survey to accurately locate oil and gas wells in accordance with 10 CSR 50-2.030 and that the results are correctly shown on the above plat.

REGISTERED LAND SURVEY

NUMBER

REMIT TWO (2) COPIES TO: MISSOURI OIL AND GAS COUNCIL, PO BOX 250, ROLLA, MO 65402 573/ 368-2165.

#20802

ONE (1) COPY TO BE RETURNED.

INSTRUCTIONS: Attach drillers log or other acceptable log of well.

* Show all important zones of porosity, detail of all cores, and all drill-stem tests, including depth interval tested, cushion used, time tool open, flowing and shut-in pressures, and recoveries.

DETAIL OF FORMATIONS PENETRATED

FORMATION	TOP	BOTTOM	DESCRIPTION (SEE * ABOVE)
			See attached

MO 780-0215 (8-06)

STATE OF MISSOURI
MISSOURI DEPARTMENT OF NATURAL RESOURCES
GEOLOGICAL SURVEY PROGRAM

INJECTION WELL MONITORING REPORT

FORM OGC-12

INSTRUCTIONS ▶ Record Injection Rate and Injection Pressure at least monthly with the results submitted annually.

COUNTY	PERMIT NUMBER	OPERATOR	WELL NUMBER
Cass	20802	D.E. Exploration, Inc.	Belton Unit #ADI-30

MONTH	INJECTION RATE – bpd/gpm	INJECTION PRESSURE – psig	DATE MEASUREMENT TAKEN	REMARKS
(01) January	0	0	January 31, 2008	RECEIVED
(02) February	0	0	February 29, 2008	JAN 08 2009
(03) March	0	0	March 31, 2008	Mo Oil & Gas Council
(04) April	0	0	April 30, 2008	
(05) May	32.26	245	May 31, 2008	
(06) June	59.67	255	June 30, 2008	
(07) July	56.58	275	July 31, 2008	
(08) August	50.10	285	August 31, 2008	
(09) September	46.70	300	September 30, 2008	
(10) October	48.35	265	October 31, 2008	
(11) November	33.97	275	November 30, 2008	
(12) December	40.87	295	December 31, 2008	

MO 780-0208 (8-06)

REMIT TWO (2) COPIES TO: GEOLOGICAL SURVEY PROGRAM, PO BOX 250, ROLLA, MO 65402 (573) 368-2143.
ONE (1) COPY WILL BE RETURNED.

STATE OF MISSOURI
MISSOURI DEPARTMENT OF NATURAL RESOURCES
GEOLOGICAL SURVEY PROGRAM

INJECTION WELL MONITORING REPORT

RECEIVED
JAN 14 2010
Mo Oil & Gas Council

FORM OGC-12

INSTRUCTIONS ▶ Record Injection Rate and Injection Pressure at least monthly with the results submitted annually.

COUNTY	PERMIT NUMBER	OPERATOR	WELL NUMBER
Cass	20802	D.E. Exploration, Inc.	Belton Unit #ADI-30

MONTH	INJECTION RATE – bpd/gpm	INJECTION PRESSURE – psig	DATE MEASUREMENT TAKEN	REMARKS
(01) January	38.81	270	January 31, 2009	
(02) February	52.14	255	February 28, 2009	
(03) March	59.74	275	March 31, 2009	
(04) April	61.00	260	April 30, 2009	
(05) May	63.29	245	May 31, 2009	
(06) June	65.00	255	June 30, 2009	
(07) July	61.55	275	July 31, 2009	
(08) August	66.97	285	August 31, 2009	
(09) September	63.37	300	September 30, 2009	
(10) October	65.26	265	October 31, 2009	
(11) November	64.17	275	November 30, 2009	
(12) December	66.03	295	December 31, 2009	

REMIT TWO (2) COPIES TO: GEOLOGICAL SURVEY PROGRAM, PO BOX 250, ROLLA, MO 65402 (573) 368-2143.
ONE (1) COPY WILL BE RETURNED.

STATE OF MISSOURI
MISSOURI DEPARTMENT OF NATURAL RESOURCES
GEOLOGICAL SURVEY PROGRAM

INJECTION WELL MONITORING REPORT

RECEIVED
JAN 13 2011
Mo Oil & Gas Council

FORM OGC-12

INSTRUCTIONS ▶ Record Injection Rate and Injection Pressure at least monthly with the results submitted annually.

COUNTY	PERMIT NUMBER	OPERATOR	WELL NUMBER
Cass	20802	D.E. Exploration, Inc.	Belton Unit #ADI-30

MONTH	INJECTION RATE – bpd/gpm	INJECTION PRESSURE – psig	DATE MEASUREMENT TAKEN	REMARKS
(01) January	62.97	250	January 31, 2010	
(02) February	55.71	250	February 28, 2010	
(03) March	57.16	260	March 31, 2010	
(04) April	57.80	255	April 30, 2010	
(05) May	56.45	245	May 31, 2010	
(06) June	64.07	255	June 30, 2010	
(07) July	54.68	275	July 31, 2010	
(08) August	61.48	285	August 31, 2010	
(09) September	59.03	300	September 30, 2010	
(10) October	58.81	265	October 31, 2010	
(11) November	55.60	275	November 30, 2010	
(12) December	60.48	295	December 31, 2010	

MO 780-0208 (8-06)

REMIT TWO (2) COPIES TO: GEOLOGICAL SURVEY PROGRAM, PO BOX 250, ROLLA, MO 65402 (573) 368-2143.
ONE (1) COPY WILL BE RETURNED.