STATE OF MISSOURI

DEPARTMENT OF NATURAL RESOURCES

MISSOURI CLEAN WATER COMMISSION

MISSOURI STATE OPERATING PERMIT

In compliance with the Missouri Clean Water Law, (Chapter 644 R.S. Mo. as amended, hereinafter, the Law), and the Federal Water Pollution Control Act (Public Law 92-500, 92nd Congress) as amended,

Permit No.	MO-0111465
Owner:	Waterloo Industries, Inc.
Address:	1500 Waterloo Drive, Sedalia, MO 65301
Continuing Authority:	Same as above
Address:	Same as above
Facility Name:	Waterloo Industries, Inc.
Facility Address:	1500 Waterloo Drive, Sedalia, MO 65301
Legal Description:	SEE PAGE TWO
UTM Coordinates:	SEE PAGE TWO
Receiving Stream:	SEE PAGE TWO
First Classified Stream and ID:	SEE PAGE TWO
USGS Basin & Sub-watershed No.:	SEE PAGE TWO

is authorized to discharge from the facility described herein, in accordance with the effluent limitations and monitoring requirements as set forth herein:

FACILITY DESCRIPTION

Outfall #001 & Outfall #004 - SEE PAGE TWO

Cold rolled steel is cut, formed welded, cleaned, painted and packaged for shipment.

This permit authorizes only wastewater discharges under the Missouri Clean Water Law and the National Pollutant Discharge Elimination System; it does not apply to other regulated areas. This permit may be appealed in accordance with Sections 640.013, 621.250, and 644.051.6 of the Law.

January 1, 2015
Effective Date

Sara Parker Pauley, Director, Department of Natural Resources

March 31, 2016
Expiration Date

John Madras, Director, Water Protection Program

FACILITY DESCRIPTION (continued

Outfall #001
Industrial - SIC # 3316
Stormwater runoff from the west side of the plant.
Actual flow is dependent upon precipitation.

Legal Description:	NW¼, NW¼, Sec 33, T46N, R21W; Pettis County
UTM Coordinates:	X=479003, Y=4286405
Receiving Stream:	Sewer Branch (U)
First Classified Stream and ID:	Sewer Branch (C) (0860) 303(d)
USGS Basin & Sub-watershed #:	10300103-0406

Outfall #002 Eliminated

Outfall #003 Eliminated

Outfall #004
Industrial - SIC # 3316
Stormwater runoff from the east side of the plant.
Actual flow is dependent upon precipitation.

Legal Description:	NW¼, NW¼, Sec 33, T46N, R21W; Pettis County
UTM Coordinates:	X=478995, Y=4286470
Receiving Stream:	Sewer Branch (U)
First Classified Stream and ID:	Sewer Branch (C) (0860) 303(d)
USGS Basin & Sub-watershed #:	10300103-0406

A. EFFLUENT LIMITATIONS AND MONITORING REQUIREMENTS

OUTFALLS #001 & #004	**TABLE A-1. FINAL EFFLUENT LIMITATIONS AND MONITORING REQUIREMENTS**					
The permittee is authorized to discharge from outfall(s) with serial number(s) as specified in the application for this permit. The final effluent limitations shall become effective **January 1, 2015**, and remain in effect until expiration of the permit. Such discharges shall be controlled, limited and monitored by the permittee as specified below:						
EFFLUENT PARAMETER(S)**	UNITS	**FINAL EFFLUENT LIMITATIONS**			MONITORING REQUIREMENTS	
		DAILY MAXIMUM	WEEKLY AVERAGE	MONTHLY AVERAGE	MEASUREMENT FREQUENCY	SAMPLE TYPE
Flow	MGD	*		*	once/quarter****	24 hr. estimate
Settleable Solids	mg/L	1.5		1.0	once/quarter****	grab
Total Suspended Solids	mg/L	100		50	once/quarter****	grab
pH – Units	SU	***		***	once/quarter****	grab
Oil & Grease	mg/L	15		10	once/quarter****	grab
Aluminum, Total Recoverable	mg/L	*			once/quarter****	grab
Zinc, Total Recoverable	mg/L	*			once/quarter****	grab
MONITORING REPORTS SHALL BE SUBMITTED QUARTERLY; THE FIRST REPORT IS DUE APRIL 28, 2015. THERE SHALL BE NO DISCHARGE OF FLOATING SOLIDS OR VISIBLE FOAM IN OTHER THAN TRACE AMOUNTS.						

A. EFFLUENT LIMITATIONS AND MONITORING REQUIREMENTS (continued)

* Monitoring requirement only.

** All samples shall be collected from a discharge resulting from a precipitation event greater than 0.1 inches in magnitude and that occurs at least 72 hours from the previously measurable precipitation event. If a precipitation event does not occur within the reporting period, report as **no discharge**
The total amount of precipitation should be noted from the event from which the samples were collected.

*** pH is measured in pH units and is not to be averaged. The pH is limited to the range of 6.5-9.0 pH units.

**** See table below for quarterly sampling.

Minimum Sampling Requirements			
Quarter	**Months**	**Effluent Parameters**	**Report is Due**
First	January, February, March	Sample at least once during any month of the quarter	April 28th
Second	April, May, June	Sample at least once during any month of the quarter	July 28th
Third	July, August, September	Sample at least once during any month of the quarter	October 28th
Fourth	October, November, December	Sample at least once during any month of the quarter	January 28th

B. STANDARD CONDITIONS

In addition to specified conditions stated herein, this permit is subject to the attached Part I standard conditions dated August,1 2014 and hereby incorporated as though fully set forth herein.

C. SPECIAL CONDITIONS

1. This permit may be reopened and modified, or alternatively revoked and reissued, to:
   (a) Comply with any applicable effluent standard or limitation issued or approved under Sections 301(b)(2)(C) and (D), 304(b)(2), and 307(a) (2) of the Clean Water Act, if the effluent standard or limitation so issued or approved:
      (1) contains different conditions or is otherwise more stringent than any effluent limitation in the permit; or
      (2) controls any pollutant not limited in the permit.
   (b) Incorporate new or modified effluent limitations or other conditions, if the result of a waste load allocation study, toxicity test or other information indicates changes are necessary to assure compliance with Missouri's Water Quality Standards.
   (c) Incorporate new or modified effluent limitations or other conditions if, as the result of a watershed analysis, a Total Maximum Daily Load (TMDL) limitation is developed for the receiving waters which are currently included in Missouri's list of waters of the state not fully achieving the state's water quality standards, also called the 303(d) list.

   The permit as modified or reissued under this paragraph shall also contain any other requirements of the Clean Water Act then applicable.

2. All outfalls must be clearly marked in the field.

3. Water Quality Standards
   (a) To the extent required by law, discharges to waters of the state shall not cause a violation of water quality standards rule under 10 CSR 20-7.031, including both specific and general criteria.
   (b) General Criteria. The following general water quality criteria shall be applicable to all waters of the state at all times including mixing zones. No water contaminant, by itself or in combination with other substances, shall prevent the waters of the state from meeting the following conditions:
      (1) Waters shall be free from substances in sufficient amounts to cause the formation of putrescent, unsightly or harmful bottom deposits or prevent full maintenance of beneficial uses;
      (2) Waters shall be free from oil, scum and floating debris in sufficient amounts to be unsightly or prevent full maintenance of beneficial uses;
      (3) Waters shall be free from substances in sufficient amounts to cause unsightly color or turbidity, offensive odor or prevent full maintenance of beneficial uses;
      (4) Waters shall be free from substances or conditions in sufficient amounts to result in toxicity to human, animal or aquatic life;
      (5) There shall be no significant human health hazard from incidental contact with the water;
      (6) There shall be no acute toxicity to livestock or wildlife watering;
      (7) Waters shall be free from physical, chemical or hydrologic changes that would impair the natural biological community;
      (8) Waters shall be free from used tires, car bodies, appliances, demolition debris, used vehicles or equipment and solid waste as defined in Missouri's Solid Waste Law, section 260.200, RSMo, except as the use of such materials is specifically permitted pursuant to section 260.200-260.247.

4. Changes in Discharges of Toxic Substances
   The permittee shall notify the Director as soon as it knows or has reason to believe:
   (a) That any activity has occurred or will occur which would result in the discharge of any toxic pollutant which is not limited in the permit, if that discharge will exceed the highest of the following "notification levels:"
      (1) One hundred micrograms per liter (100 µg/L);
      (2) Two hundred micrograms per liter (200 µg/L) for acrolein and acrylonitrile; five hundred micrograms per liter (500 µg/L) for 2,5 dinitrophenol and for 2-methyl-4, 6-dinitrophenol; and one milligram per liter (1 mg/L) for antimony;
      (3) Five (5) times the maximum concentration value reported for the pollutant in the permit application;
      (4) The level established by the Director in accordance with 40 CFR 122.44(f).
   (b) That they have begun or expect to begin to use or manufacture as an intermediate or final product or byproduct any toxic pollutant, which was not reported in the permit application.

5. Report as no-discharge when a discharge does not occur during the report period.

6. Reporting of Non-Detects:
   (a) An analysis conducted by the permittee or their contracted laboratory shall be conducted in such a way that the precision and accuracy of the analyzed result can be enumerated.

   (b) The permittee shall not report a sample result as "Non-Detect" without also reporting the detection limit of the test. Reporting as "Non Detect" without also including the detection limit will be considered failure to report, which is a violation of this permit.

C. SPECIAL CONDITIONS (continued)

(c) The permittee shall provide the "Non-Detect" sample result using the less than sign and the minimum detection limit (e.g. <10).
(d) Where the permit contains a Minimum Level (ML) and the permittee is granted authority in the permit to report zero in lieu of the < ML for a specified parameter (conventional, priority pollutants, metals, etc.), then zero (0) is to be reported for that parameter.
(e) See Standard Conditions Part I, Section A, #4 regarding proper detection limits used for sample analysis.

7. It is a violation of the Missouri Clean Water Law to fail to pay fees associated with this permit (644.055 RSMo).

8. The permittee shall implement a Stormwater Pollution Prevention Plan (SWPPP). The SWPPP must be prepared and implemented upon permit issuance. The SWPPP must be kept on-site and should not be sent to the department unless specifically requested. The SWPPP must be reviewed and updated, if needed, every five (5) years or as site conditions change. The permittee shall select, install, use, operate, and maintain the Best Management Practices prescribed in the SWPPP in accordance with the concepts and methods described in the following document:

   Developing Your Stormwater Pollution Prevention Plan, A Guide for Industrial Operators, (Document number EPA 833-B-09-002) published by the United States Environmental Protection Agency (USEPA) in February 2009.
   The SWPPP must include the following:
   a. A listing of specific Best Management Practices (BMPs) and a narrative explaining how BMPs will be implemented to control and minimize the amount of potential contaminants that may enter stormwater. The BMPs at the facility should be designed to meet this value during rainfall event up to the 10 year, 24 hour rain event.
   b. The SWPPP must include a schedule for once per month site inspections and brief written reports. The inspection report must include weather information for the entire period since last inspection, as well as observations and evaluations of BMP effectiveness. Deficiencies must be corrected within seven (7) days and the actions taken to correct the deficiencies shall be included with the written report, including photographs. Any corrective measure that necessitates major construction may also need a construction permit. Inspection reports must be kept on site with the SWPPP and maintained for a period of five (5) years. These must be made available to department personnel upon request.
   c. A provision for designating an individual to be responsible for environmental matters.
   d. A provision for providing training to all personnel involved in material handling and storage, and housekeeping of maintenance and cleaning areas. Proof of training shall be submitted on request of the department.

9. Permittee shall adhere to the following minimum Best Management Practices (BMPs):
   a. Prevent the spillage or loss of fluids, oil, grease, fuel, etc. from vehicle maintenance, equipment cleaning, or warehouse activities and thereby prevent the contamination of stormwater from these substances.
   b. Provide collection facilities and arrange for proper disposal of waste products including but not limited to petroleum waste products, and solvents.
   c. Store all paint, solvents, petroleum products and petroleum waste products (except fuels), and storage containers (such as drums, cans, or cartons) so that these materials are not exposed to stormwater or provide other prescribed BMPs such as plastic lids and/or portable spill pans to prevent the commingling of stormwater with container contents. Commingled water may not be discharged under this permit. Provide spill prevention control, and/or management sufficient to prevent any spills of these pollutants from entering waters of the state. Any containment system used to implement this requirement shall be constructed of materials compatible with the substances contained and shall also prevent the contamination of groundwater.
   d. Provide good housekeeping practices on the site to keep trash from entry into waters of the state.
   e. Provide sediment and erosion control sufficient to prevent or control sediment loss off of the property. This could include the use of straw bales, silt fences, or sediment basins, if needed, to comply with effluent limits.

10. The purpose of the SWPPP and the BMPs listed herein is the prevention of pollution of waters of the state. A deficiency of a BMP means it was not effective in preventing pollution [10 CSR 20-2.010(56)] of waters of the state, and corrective actions means the facility took steps to eliminate the deficiency.

11. Release of a hazardous substance must be reported to the department in accordance with 10 CSR 24-3.010. A record of each reportable spill shall be retained with the SWPPP and made available to the department upon request.

C. SPECIAL CONDITIONS (continued)

12. This permit stipulates pollutant benchmarks applicable to your discharge. The benchmarks do not constitute direct numeric effluent limitations; therefore, a benchmark exceedance alone is not a permit violation. Benchmark monitoring and visual inspections shall be used to determine the overall effectiveness of your SWPPP and to assist you in knowing when additional corrective action may be necessary to protect water quality. If a sample exceeds a benchmark concentration you must review your SWPPP and your BMPs to determine what improvements or additional controls are needed to reduce that pollutant in your stormwater discharge(s). Failure to improve BMPs and achieve compliance with the benchmarks is a permit violation.

Parameter	**Benchmark**
Aluminum, Total Recoverable	0.75 mg/L
Zinc, Total Recoverable	0.20 mg/L

Any time a benchmark exceedance occurs, a Corrective Action Report (CAR) must be completed and documented in the SWPPP. A CAR is a document that records the efforts undertaken by the facility to improve BMPs to meet benchmarks in future samples. If the efforts taken by the facility are not sufficient and subsequent exceedances of a benchmark occur, the facility must demonstrate to the department that a benchmark value cannot be achieved. The demonstration must include rationale and supporting documentation (which would include the CARs) and must show that a benchmark value cannot be achieved through the application of BMPs representing available technology. Additionally, the demonstration must show that the benchmark is not feasible because no further pollutant reductions are technologically available or economically practicable in light of best industry practices. This demonstration must be presented to the department for review and approval.

The facility may demonstrate via a Corrective Action Report that the benchmark value cannot be achieved through the application of BMPs representing the available technology and the benchmark is not feasible because no further pollutant reductions are technologically available and economically practicable and achievable in light of best industry practice. Upon concurrence with a Corrective Action report by the Department, the facility may return to normal quarterly reporting. This evaluation must be kept on file with the SWPPP. Failure to evaluate and improve BMPs to address a benchmark value exceedance is a permit violation.

Missouri Department of Natural Resources
FACT SHEET
FOR THE PURPOSE OF RENEWAL
OF
MO-0111465
WATERLOO INDUSTRIES

The Federal Water Pollution Control Act ("Clean Water Act" Section 402 Public Law 92-500 as amended) established the National Pollution Discharge Elimination System (NPDES) permit program. This program regulates the discharge of pollutants from point sources into the waters of the United States, and the release of stormwater from certain point sources. All such discharges are unlawful without a permit (Section 301 of the "Clean Water Act"). After a permit is obtained, a discharge not in compliance with all permit terms and conditions is unlawful. Missouri State Operating Permits (MSOPs) are issued by the Director of the Missouri Department of Natural Resources (Department) under an approved program, operating in accordance with federal and state laws (Federal "Clean Water Act" and "Missouri Clean Water Law" Section 644 as amended). MSOPs are issued for a period of five (5) years unless otherwise specified.

As per [40 CFR Part 124.8(a)] and [10 CSR 20-6.020(1)2.] a Factsheet shall be prepared to give pertinent information regarding the applicable regulations, rationale for the development of effluent limitations and conditions, and the public participation process for the Missouri State Operating Permit (operating permit) listed below.

A Factsheet is not an enforceable part of an operating permit.

This Factsheet is for an Industrial Facility.

Part I – Facility Information

Facility Type: Industrial
Facility SIC Code(s): 3316

Facility Description:
There was an error in reporting the Standard Classification Code (SIC) for this facility. SIC code # 3316 is more appropriate classification for this facility. Cold rolled steel is cut, formed welded, cleaned, painted and packaged for shipment. Products consist of tool storage equipment.This facility has replaced a cooling pond (outfall #002) with water chillers and relinquished a lease on the pond; therefore outfall #002 was terminated. Also outfall #003 was terminated. Outfall #'s 001 and 004 discharge only stormwater originating on the plant site. Discharge, from the outfalls, travels 3.4 miles to Sewer Branch, a class C stream with reported uses of livestock watering and aquatic life protection. A UAA evaluation recommended removal of the whole body contact recreation designation. Sewer Branch was on the state of Missouri 2002 303(d) list for unknown pollutants and DO, from unknown point and non-point sources.

Have any changes occurred at this facility or in the receiving water body that effects effluent limit derivation?
☐ - Yes;
☒ - No.
Application Date: 01/03/14
Expiration Date: 01/19/12
Last Inspection: 01/19/10 In Compliance ☒; Non-Compliance ☐

OUTFALL(S) TABLE:

OUTFALL	DESIGN FLOW (CFS)	TREATMENT LEVEL	EFFLUENT TYPE
#001	Dependent upon rainfall	BMP*	Stormwater Runoff
#004	Dependent upon rainfall	BMP*	Stormwater Runoff

*Best Management Practices
Outfalls #002&#003 were terminated.

Facility Performance History & Comments:
During the last five years, the facility had two TSS violations at outfall #001 and one violation for TSS at outfall #004. This is an improvement from the previous permit cycle in which the facility had 7 violations for TSS, 2 violations a piece for Settleable Solids and Oil &Grease.

Part II – Receiving Stream Information

Receiving Water Body's Water Quality

UAA conducted in 2005 on both the classified and unclassified sections of Sewer branch recommends removal of the WBCR classifications. Discharge is 3.4 miles from class "C" section of Sewer Branch. Sewer Branch is on the state 303(d) list for unknown pollutants, and DO, from unknown point and non-point sources.

APPLICABLE DESIGNATIONS OF WATERS OF THE STATE:
As per Missouri's Effluent Regulations [10 CSR 20-7.015], the waters of the state are divided into the below listed seven (7) categories. Each category lists effluent limitations for specific parameters, which are presented in each outfall's Effluent Limitation Table and further discussed in the Derivation & Discussion of Limits section.

Missouri or Mississippi River [10 CSR 20-7.015(2)]: ☐
Lake or Reservoir [10 CSR 20-7.015(3)]: ☐
Losing [10 CSR 20-7.015(4)]: ☐
Metropolitan No-Discharge [10 CSR 20-7.015(5)]: ☐
Special Stream [10 CSR 20-7.015(6)]: ☐
Subsurface Water [10 CSR 20-7.015(7)]: ☐
All Other Waters [10 CSR 20-7.015(8)]: ☒

10 CSR 20-7.031 Missouri Water Quality Standards, the Department defines the Clean Water Commission water quality objectives in terms of "water uses to be maintained and the criteria to protect those uses." The receiving stream and 1st classified receiving stream's beneficial water uses to be maintained are located in the Receiving Stream Table located below in accordance with [10 CSR 20-7.031(3)].

RECEIVING STREAM(S) TABLE: OUTFALL #001&#004

WATERBODY NAME	CLASS	WBID	DESIGNATED USES*	DISTANCE TO CLASSIFIED SEGMENT	12-DIGIT HUC**
Sewer Branch	U	NA	NA	3.4 Miles	10300103-0406
Sewer Branch	C	0860	General Criteria AQL/LWW		

* - Irrigation (IRR), Livestock & Wildlife Watering (LWW), Protection of Warm Water Aquatic Life and Human Health-Fish Consumption (AQL), Cool Water Fishery(CLF), Cold Water Fishery (CDF), Whole Body Contact Recreation (WBC), Secondary Contact Recreation (SCR), Drinking Water Supply (DWS), Industrial (IND), Groundwater (GRW). ** - Hydrologic Unit Code

RECEIVING STREAM(S) LOW-FLOW VALUES TABLE:

RECEIVING STREAM (U, C, P)	LOW-FLOW VALUES (CFS)		
	1Q10	7Q10	30Q10
Sewer Branch	0.0	0.0	0.0

Mixing Zone: Not Allowed [10 CSR 20-7.031(4)(A)4.B.(I)(a)].
Zone of Initial Dilution: Not Allowed [10 CSR 20-7.031(4)(A)4.B.(I)(b)].

Part III – Rationale and Derivation of Effluent Limitations & Permit Conditions

ALTERNATIVE EVALUATIONS FOR NEW FACILITIES:
As per [10 CSR 20-7.015(4)(A)], discharges to losing streams shall be permitted only after other alternatives including land application, discharges to a gaining stream and connection to a regional wastewater treatment facility have been evaluated and determined to be unacceptable for environmental and/or economic reasons.

☒ Not Applicable; The facility does not discharge to a Losing Stream as defined by [10 CSR 20-2.010(36)] & [10 CSR 20-7.031(1)(N)], or is an existing facility.

ANTI-BACKSLIDING:
A provision in the Federal Regulations [CWA §303(d)(4); CWA §402(c); 40 CFR Part 122.44(I)] that requires a reissued permit to be as stringent as the previous permit with some exceptions.

☒ - All limits in this operating permit are at least as protective as those previously established; therefore, backsliding does not apply.

ANTIDEGRADATION:
In accordance with Missouri's Water Quality Standard [10 CSR 20-7.031(2)], the Department is to document by means of Antidegradation Review that the use of a water body's available assimilative capacity is justified. Degradation is justified by documenting the socio-economic importance of a discharging activity after determining the necessity of the discharge.

☒ - Renewal no degradation proposed and no further review necessary.

BIOSOLIDS & SEWAGE SLUDGE:
Biosolids are solid materials resulting from domestic wastewater treatment that meet federal and state criteria for beneficial uses (i.e. fertilizer). Sewage sludge is solids, semi-solids, or liquid residue generated during the treatment of domestic sewage in a treatment works; including but not limited to, domestic septage; scum or solids removed in primary, secondary, or advanced wastewater treatment process; and a material derived from sewage sludge. Sewage sludge does not include ash generated during the firing of sewage sludge in a sewage sludge incinerator or grit and screening generated during preliminary treatment of domestic sewage in a treatment works. Additional information regarding biosolids and sludge is located at the following web address: http://extension.missouri.edu/main/DisplayCategory.aspx?C=74, items WQ422 through WQ449.

☒ Not applicable; This condition is not applicable to the permittee for this facility.

COMPLIANCE AND ENFORCEMENT:
Enforcement is the action taken by the Water Protection Program (WPP) to bring an entity into compliance with the Missouri Clean Water Law, its implementing regulations, and/or any terms and conditions of an operating permit. The primary purpose of the enforcement activity in the WPP is to resolve violations and return the entity to compliance.

☒ Not Applicable; The permittee/facility is not currently under Water Protection Program enforcement action.

REASONABLE POTENTIAL ANALYSIS (RPA):
Federal regulation [40 CFR Part 122.44(d)(1)(i)] requires effluent limitations for all pollutants that are or may be discharged at a level that will cause or have the reasonable potential to cause or contribute to an in-stream excursion above narrative or numeric water quality standard.

In accordance with [40 CFR Part 122.44(d)(iii)] if the permit writer determines that any give pollutant has the reasonable potential to cause, or contribute to an in-stream excursion above the WQS, the permit must contain effluent limits for that pollutant.

☒ Not Applicable; A RPA was not conducted for this facility.

SCHEDULE OF COMPLIANCE (SOC):
A schedule of remedial measures included in a permit, including an enforceable sequence of interim requirements (actions, operations, or milestone events) leading to compliance with the Missouri Clean Water Law, its implementing regulations, and/or the terms and conditions of an operating permit.

☒ Not Applicable; This permit does not contain a SOC.

STORMWATER POLLUTION PREVENTION PLAN (SWPPP):
In accordance with 40 CFR 122.44(k) *Best Management Practices (BMPs)* to control or abate the discharge of pollutants when: (1) Authorized under section 304(e) of the Clean Water Act (CWA) for the control of toxic pollutants and hazardous substances from ancillary industrial activities: (2) Authorized under section 402(p) of the CWA for the control of stormwater discharges; (3) Numeric effluent limitations are infeasible; or (4) the practices are reasonably necessary to achieve effluent limitations and standards or to carry out the purposes and intent of the CWA.

In accordance with the EPA's *Developing Your Stormwater Pollution Prevention Plan, A Guide for Industrial Operators*, (Document number EPA 833-B-09-002) [published by the United States Environmental Protection Agency (USEPA) in February 2009], BMPs are measures or practices used to reduce the amount of pollution entering (regarding this operating permit) waters of the state. BMPs may take the form of a process, activity, or physical structure.

Additionally in accordance with the Stormwater Management, a SWPPP is a series of steps and activities to (1) identify sources of pollution or contamination, and (2) select and carry out actions which prevent or control the pollution of stormwater discharges.

☒ Applicable; A SWPPP shall be developed and implemented for each site and shall incorporate required practices identified by the Department with jurisdiction, incorporate erosion control practices specific to site conditions, and provide for maintenance and adherence to the plan.

SPILL REPORTING:
Per 10 CSR 24-3.010, any emergency involving a hazardous substance must be reported to the department's 24 hour Environmental Emergency Response hotline at (573) 634-2436 at the earliest practicable moment after discovery. The department may require the submittal of a written report detailing measures taken to clean up a spill. These reporting requirements apply whether or not the spill results in chemicals or materials leaving the permitted property or reaching waters of the state. This requirement is in addition to the Noncompliance Reporting requirement found in Standard Conditions Part I.

VARIANCE:
As per the Missouri Clean Water Law § 644.061.4, variances shall be granted for such period of time and under such terms and conditions as shall be specified by the commission in its order. The variance may be extended by affirmative action of the commission. In no event shall the variance be granted for a period of time greater than is reasonably necessary for complying with the Missouri Clean Water Law §§644.006 to 644.141 or any standard, rule or regulation promulgated pursuant to Missouri Clean Water Law §§644.006 to 644.141.

☒ Not Applicable; This operating permit is not drafted under premises of a petition for variance.

WASTELOAD ALLOCATIONS (WLA) FOR LIMITS:
As per [10 CSR 20-2.010(78)], the amount of pollutant each discharger is allowed by the Department to release into a given stream after the Department has determined total amount of pollutant that may be discharged into that stream without endangering its water quality.

☒ Applicable; Wasteload allocations were calculated where applicable using water quality criteria or water quality model results and the dilution equation below:

$$C = \frac{(Cs \times Qs) + (Ce \times Qe)}{(Qe + Qs)}$$ (EPA/505/2-90-001, Section 4.5.5)

Where C = downstream concentration
Cs = upstream concentration
Qs = upstream flow
Ce = effluent concentration
Qe = effluent flow

Chronic wasteload allocations were determined using applicable chronic water quality criteria (CCC: criteria continuous concentration) and stream volume of flow at the edge of the mixing zone (MZ). Acute wasteload allocations were determined using applicable water quality criteria (CMC: criteria maximum concentration) and stream volume of flow at the edge of the zone of initial dilution (ZID).

Water quality based maximum daily and average monthly effluent limitations were calculated using methods and procedures outlined in USEPA's "Technical Support Document For Water Quality-based Toxics Control" (EPA/505/2-90-001).

<u>Number of Samples "n":</u>
Additionally, in accordance with the TSD for water quality-based permitting, effluent quality is determined by the underlying distribution of daily values, which is determined by the Long Term Average (LTA) associated with a particular Wasteload Allocation (WLA) and by the Coefficient of Variation (CV) of the effluent concentrations. Increasing or decreasing the monitoring frequency does not affect this underlying distribution or treatment performance, which should be, at a minimum, be targeted to comply with the values dictated by the WLA. Therefore, it is recommended that the actual planned frequency of monitoring normally be used to determine the value of "n" for calculating the AML. However, in situations where monitoring frequency is once per month or less, a higher value for "n" must be assumed for AML derivation purposes. Thus, the statistical procedure being employed using an assumed number of samples is "n = 4" at a minimum. For Total Ammonia as Nitrogen, "n = 30" is used.

☒ Not Applicable; Wasteload allocations were not calculated.

WLA MODELING:
There are two general types of effluent limitations, technology-based effluent limits (TBELs) and water quality based effluent limits (WQBELs). If TBELs do not provide adequate protection for the receiving waters, then WQBEL must be used.

☒ Not Applicable; A WLA study was either not submitted or determined not applicable by Department staff.

WATER QUALITY STANDARDS:
Per [10 CSR 20-7.031(3)], General Criteria shall be applicable to all waters of the state at all times including mixing zones. Additionally, [40 CFR 122.44(d)(1)] directs the Department to establish in each NPDES permit to include conditions to achieve water quality established under Section 303 of the Clean Water Act, including State narrative criteria for water quality.

WHOLE EFFLUENT TOXICITY (WET) TEST:
A WET test is a quantifiable method of determining if a discharge from a facility may be causing toxicity to aquatic life by itself, in combination with or through synergistic responses when mixed with receiving stream water.

☒ Not Applicable; At this time, the permittee is not required to conduct WET test for this facility.

303(d) LIST & TOTAL MAXIMUM DAILY LOAD (TMDL):
Section 303(d) of the federal Clean Water Act requires that each state identify waters that are not meeting water quality standards and for which adequate water pollution controls have not been required. Water quality standards protect such beneficial uses of water as whole body contact (such as swimming), maintaining fish and other aquatic life, and providing drinking water for people, livestock and wildlife. The 303(d) list helps state and federal agencies keep track of waters that are impaired but not addressed by normal water pollution control programs.

A TMDL is a calculation of the maximum amount of a given pollutant that a body of water can absorb before its water quality is affected. If a water body is determined to be impaired as listed on the 303(d) list, then a watershed management plan will be developed that shall include the TMDL calculation

☒ Applicable; Sewer Branch is listed on the 2002 Missouri 303(d) List for unknown pollutants and DO, from unknown point and non-point sources.

> ☒ – This facility is not considered to be a source of the above listed pollutant(s) or considered to contribute to the impairment of Sewer Branch.

Part IV – Effluent Limits Determination

Outfalls #001 &#004 – Main Facility Outfall
Effluent limitations derived and established in the below Effluent Limitations Table are based on current operations of the facility. Future permit action due to facility modification may contain new operating permit terms and conditions that supersede the terms and conditions, including effluent limitations, of this operating permit.
EFFLUENT LIMITATIONS TABLE:

PARAMETER	UNIT	Basis for Limits	DAILY MAXIMUM	WEEKLY AVERAGE	MONTHLY AVERAGE	MODIFIED	PREVIOUS PERMIT LIMITATIONS
FLOW	GPD	1				NO	NA
Settleable Solids	ML/L/HR	1,4	1.5		1.0	NO	NA
TSS	MG/L	1, 4	100		50	NO	NA
pH	SU	1, 4	6.5-9.0		6.5-9.0	YES	6.0-9.0
OIL & GREASE (MG/L)	MG/L	1, 3	15		10	NO	NA
ALUMINUM, TOTAL RECOVERABLE	µg/L	2, 9	*			YES	**
ZINC, TOTAL RECOVERABLE	µg/L	2, 9	*			YES	**

* - Monitoring requirement only.
** - Parameter not previously established in previous state operating permit.

Basis for Limitations Codes:
1. State or Federal Regulation/Law
2. Water Quality Standard (includes RPA)
3. Water Quality Based Effluent Limits
4. Lagoon Policy
5. Ammonia Policy
6. Antidegradation Review
7. Antidegradation Policy
8. Water Quality Model
9. Best Professional Judgment
10. TMDL or Permit in lieu of TMDL
11. WET Test Policy

OUTFALL #001 & #004 – DERIVATION AND DISCUSSION OF LIMITS:

- **Flow**. In accordance with [40 CFR Part 122.44(i)(1)(ii)] the volume of effluent discharged from each outfall is needed to assure compliance with permitted effluent limitations. If the permittee is unable to obtain effluent flow, then it is the responsibility of the permittee to inform the Department, which may require the submittal of an operating permit modification.

- **Settleable Solids.** Due to the nature of the discharge being stormwater, effluent limitations for Settleable Solids will remain in the permit. The previous permit set the limits for Settleable solids at 1.5 mL/L/hr for a daily maximum and 1.0 mL/L/hr for a monthly average. The DMR history shows that this facility is capable of meeting these limits.

- **Total Suspended Solids (TSS).** Although the nature of the discharge is stormwater only, the DMR history shows that the facility has reached levels beyond the permit limits of 100 mg/L listed in the previous permit. The excursions of the limits occurred once for Outfall #001 (135 mg/L in 2007) exceeding the daily maximum & Outfall #004 (65 mg/L in 2011) exceeding the monthly average. Although the SIC #3316 does not have a Benchmark Value for TSS, the DMR history proves that this facility has a potential to impair the stream due to high TSS results. Thus, the permit writer has used best professional judgment in retaining the previous permit limits of 100 mg/L for the daily maximum and 50 mg/L for the monthly average.

- **pH**. – 6.5-9.0 SU. Technology based effluent limitations of 6.0-9.0 SU [10 CSR 20-7.015] are not protective of the Water Quality Standard, which states that water contaminants shall not cause pH to be outside the range of 6.5-9.0 SU. No mixing zone is allowed due to the classification of the receiving stream, therefore the water quality standard must be met at the outfall.

- **Oil & Grease**. Conventional pollutant, in accordance with 10 CSR 20-7.031 Table A, effluent limitation for protection of aquatic life is 10 mg/L for a monthly average and 15 mg/L for a daily maximum.

Metals Bench Mark Values

Due to the absence of contemporaneous effluent and instream data for total recoverable metals, dissolved metals, hardness, and total suspended solids with which to calculate metals translators, partitioning between the dissolved and absorbed phases was assumed to be minimal (Section 5.7.3, EPA/505/2-90-001). Freshwater criteria conversion factors for dissolved metals were used as the metals translator as recommended in guidance (Section 1.3, 1.5.3, and Table 1, EPA 823-B-96-007). If concurrent site-specific data for total recoverable metals, dissolved metals, hardness, and total suspended solids are provided to the Department, partitioning evaluations may be considered and site-specific translators developed.

METAL	CONVERSION FACTORS	
	ACUTE	CHRONIC
Aluminum	N/A	N/A
Zinc	0.980	0.980

Conversion factors for Cd and Pb are hardness dependent. Values calculated using equation found in Section 1.3 of EPA 823-B-96-007 and hardness = 193 mg/L for stormwater discharges.

N/A = not applicable.

The Environmental Protection Agency (EPA)'s Multi-sector General Permit (MSGP) regulates discharges of stormwater from 29 different industrial sectors. The sectors group similar facilities by the nature of industrial activity, type of materials handled, and material management practices employed. The sectors are based on the definition of "stormwater discharge associated with industrial activity" found at 40 CFR 122.26 (b)(14)(i)-(ix), (xi). Most sectors are based on a facility's Standard Industrial Classification (SIC) code.
There was an error in reporting the Standard Classification Code (SIC) for this facility. The previous SIC code was 3469 but SIC code # 3316 is more appropriate classification for this facility. SIC code # 3316 is listed under subsector F1 in the EPA Multi-sector General Permit (MSGP). Subsector F1 has listed benchmark monitoring cutoff concentration for Aluminum, total recoverable and Zinc, total recoverable.

- **Aluminum, Total Recoverable**. Protection of Aquatic Life Chronic Criteria = N/A, Acute Criteria = 750 µg/L., The Multi-Sector General Permit (MSGP), subsector F1 contains this parameter as a Benchmark Value. Due to the types of metals materials exposed at this site, these activities have been considered similar enough to add this parameter. For these reason it is the permit writer's best professional judgment to require monitoring only for this parameter while implementing a Benchmark Value. Stormwater causes a "first flush" occurrence, which contains the highest concentrations of pollutants in the discharge. In order to capture this "first flush", the Benchmark Value will be based on the Acute Criteria of 750 µg/L.

  Acute Benchmark = 750 µg/L or 0.75 mg/L

- **Zinc, Total Recoverable.** Since Zinc is hardness dependent and utilizing stormwater hardness value of 193 mg/L. The Protection of Aquatic Life Chronic Criteria = 188 µg/L, Acute Criteria = 188. The Multi-sector General Permit (MSGP), subsector F1 contains this parameter as a Benchmark Value. Due to the types of metals materials exposed at this site, these activities have been considered similar enough to add this parameter. For this reason, it is the permit writer's best professional judgment to require monitoring only for this parameter while implementing a Benchmark Value. Stormwater causes a "first flush" occurrence, which contains the highest concentrations of pollutants in the discharge, so the Benchmark Value will be based on the Acute/chronic Criteria of 188 µg/L.

  Acute Benchmark = 188/0.980 = 192 µg/L or 0.20 mg/L

Minimum Sampling and Reporting Frequency Requirements.

PARAMETER	SAMPLING FREQUENCY	REPORTING FREQUENCY
Flow	once/quarter	once/quarter
Settleable Solids	once/quarter	once/quarter
TSS	once/quarter	once/quarter
pH	once/quarter	once/quarter
Oil & Grease	once/quarter	once/quarter
ALUMINUM, TOTAL RECOVERABLE	once/quarter	once/quarter
ZINC, TOTAL RECOVERABLE	once/quarter	once/quarter

Sampling Frequency Justification:
Sampling and Reporting Frequency were retained from the previous permit and set at quarterly requirements, due to this being a stormwater discharge.

Sampling Type Justification
Sampling Type shall be grab sample, due to the nature of the discharge being influenced by stormwater. Stormwater runoff has a first flush component, which washes out the highest concentrations of pollutants in the first part of the rain event. grab samples capture first flush and will provide the most representative sample during discharge events.

Part V– Administrative Requirements

On the basis of preliminary staff review and the application of applicable standards and regulations, the Department, as administrative agent for the Missouri Clean Water Commission, proposes to issue a permit(s) subject to certain effluent limitations, schedules, and special conditions contained herein and within the operating permit. The proposed determinations are tentative pending public comment.

PERMIT SYNCHRONIZATION:
The Department of Natural Resources is currently undergoing a synchronization process for operating permits. Permits are normally issued on a five-year term, but to achieve synchronization many permits will need to be issued for less than the full five years allowed by regulation. The intent is that all permits within a watershed will move through the Watershed Based Management (WBM) cycle together will all expire in the same fiscal year. This will allow further streamlining by placing multiple permits within a smaller geographic area on public notice simultaneously, thereby reducing repeated administrative efforts. This will also allow the department to explore a watershed based permitting effort at some point in the future. Renewal applications must continue to be submitted within 180 days of expiration, however, in instances where effluent data from the previous renewal is less than three years old, that data may be re-submitted to meet the requirements of the renewal application. If the permit provides a schedule of compliance for meeting new water quality based effluent limits beyond the expiration date of the permit, the time remaining in the schedule of compliance will be allotted in the renewed permit.

PUBLIC NOTICE:
The Department shall give public notice that a draft permit has been prepared and its issuance is pending. Additionally, public notice will be issued if a public hearing is to be held because of a significant degree of interest in and water quality concerns related to a draft permit. No public notice is required when a request for a permit modification or termination is denied; however, the requester and permittee must be notified of the denial in writing.

The Department must issue public notice of a pending operating permit or of a new or reissued statewide general permit. The public comment period is the length of time not less than 30 days following the date of the public notice which interested persons may submit written comments about the proposed permit.

For persons wanting to submit comments regarding this proposed operating permit, then please refer to the Public Notice page located at the front of this draft operating permit. The Public Notice page gives direction on how and where to submit appropriate comments.

☒ - The Public Notice period for this operating permit was from 9/20/2014 to 10/20/2014. No responses received.

DATE OF FACT SHEET: (JUNE, 2014)

COMPLETED BY:

Thabit H. Hamoud, P.E, EE III
Missouri Department of Natural Resources
Water Protection Program-Industrial Unit
7545 S. Lindbergh, Suite 210, St. Louis, Missouri 63125
(314) 416-2453
thabit.hamoud@dnr.mo.gov

STANDARD CONDITIONS FOR NPDES PERMITS
ISSUED BY
THE MISSOURI DEPARTMENT OF NATURAL RESOURCES
MISSOURI CLEAN WATER COMMISSION
REVISED
AUGUST 1, 2014

These Standard Conditions incorporate permit conditions as required by 40 CFR 122.41 or other applicable state statutes or regulations. These minimum conditions apply unless superseded by requirements specified in the permit.

Part I – General Conditions
Section A – Sampling, Monitoring, and Recording

1. **Sampling Requirements.**
   a. Samples and measurements taken for the purpose of monitoring shall be representative of the monitored activity.
   b. All samples shall be taken at the outfall(s) or Missouri Department of Natural Resources (Department) approved sampling location(s), and unless specified, before the effluent joins or is diluted by any other body of water or substance.

2. **Monitoring Requirements**.
   a. Records of monitoring information shall include:
      i. The date, exact place, and time of sampling or measurements;
      ii. The individual(s) who performed the sampling or measurements;
      iii. The date(s) analyses were performed;
      iv. The individual(s) who performed the analyses;
      v. The analytical techniques or methods used; and
      vi. The results of such analyses.
   b. If the permittee monitors any pollutant more frequently than required by the permit at the location specified in the permit using test procedures approved under 40 CFR Part 136, or another method required for an industry-specific waste stream under 40 CFR subchapters N or O, the results of such monitoring shall be included in the calculation and reported to the Department with the discharge monitoring report data (DMR) submitted to the Department pursuant to Section B, paragraph 7.

3. **Sample and Monitoring Calculations.** Calculations for all sample and monitoring results which require averaging of measurements shall utilize an arithmetic mean unless otherwise specified in the permit.

4. **Test Procedures**. The analytical and sampling methods used shall conform to the reference methods listed in 10 CSR 20-7.015 unless alternates are approved by the Department. The facility shall use sufficiently sensitive analytical methods for detecting, identifying, and measuring the concentrations of pollutants. The facility shall ensure that the selected methods are able to quantify the presence of pollutants in a given discharge at concentrations that are low enough to determine compliance with Water Quality Standards in 10 CSR 20-7.031 or effluent limitations unless provisions in the permit allow for other alternatives. A method is "sufficiently sensitive" when; 1) the method minimum level is at or below the level of the applicable water quality criterion for the pollutant or, 2) the method minimum level is above the applicable water quality criterion, but the amount of pollutant in a facility's discharge is high enough that the method detects and quantifies the level of pollutant in the discharge, or 3) the method has the lowest minimum level of the analytical methods approved under 10 CSR 20-7.015. These methods are also required for parameters that are listed as monitoring only, as the data collected may be used to determine if limitations need to be established. A permittee is responsible for working with their contractors to ensure that the analysis performed is sufficiently sensitive.

5. **Record Retention.** Except for records of monitoring information required by the permit related to the permittee's sewage sludge use and disposal activities, which shall be retained for a period of at least five (5) years (or longer as required by 40 CFR part 503), the permittee shall retain records of all monitoring information, including all calibration and maintenance records and all original strip chart recordings for continuous monitoring instrumentation, copies of all reports required by the permit, and records of all data used to complete the application for the permit, for a period of at least three (3) years from the date of the sample, measurement, report or application. This period may be extended by request of the Department at any time.

6. **Illegal Activities.**
   a. The Federal Clean Water Act provides that any person who falsifies, tampers with, or knowingly renders inaccurate any monitoring device or method required to be maintained under the permit shall, upon conviction, be punished by a fine of not more than $10,000, or by imprisonment for not more than two (2) years, or both. If a conviction of a person is for a violation committed after a first conviction of such person under this paragraph, punishment is a fine of not more than $20,000 per day of violation, or by imprisonment of not more than four (4) years, or both.
   b. The Missouri Clean Water Law provides that any person or who falsifies, tampers with, or knowingly renders inaccurate any monitoring device or method required to be maintained pursuant to sections 644.006 to 644.141 shall, upon conviction, be punished by a fine of not more than $10,000, or by imprisonment for not more than six (6) months, or by both. Second and successive convictions for violation under this paragraph by any person shall be punished by a fine of not more than $50,000 per day of violation, or by imprisonment for not more than two (2) years, or both.

Section B – Reporting Requirements

1. **Planned Changes.**
   a. The permittee shall give notice to the Department as soon as possible of any planned physical alterations or additions to the permitted facility when:
      i. The alteration or addition to a permitted facility may meet one of the criteria for determining whether a facility is a new source in 40 CFR 122.29(b); or
      ii. The alteration or addition could significantly change the nature or increase the quantity of pollutants discharged. This notification applies to pollutants which are subject neither to effluent limitations in the permit, nor to notification requirements under 40 CFR 122.42(a)(1);
      iii. The alteration or addition results in a significant change in the permittee's sludge use or disposal practices, and such alteration, addition, or change may justify the application of permit conditions that are different from or absent in the existing permit, including notification of additional use or disposal sites not reported during the permit application process or not reported pursuant to an approved land application plan;
      iv. Any facility expansions, production increases, or process modifications which will result in a new or substantially different discharge or sludge characteristics must be reported to the Department 60 days before the facility or process modification begins. Notification may be accomplished by application for a new permit. If the discharge does not violate effluent limitations specified in the permit, the facility is to submit a notice to the Department of the changed discharge at least 30 days before such changes. The Department may require a construction permit and/or permit modification as a result of the proposed changes at the facility.

2. **Non-compliance Reporting.**
   a. The permittee shall report any noncompliance which may endanger health or the environment. Relevant information shall be provided orally or via the current electronic method approved by the Department, within 24 hours from the time the permittee becomes aware of the circumstances, and shall be reported to the appropriate Regional Office during normal business hours or the Environmental Emergency Response hotline at 573-634-2436 outside of normal business hours. A written submission shall also be provided within five (5) business days of the time the permittee becomes aware of the circumstances. The written submission shall contain a description of the noncompliance and its cause; the period of noncompliance, including exact dates and times, and if the noncompliance has not been corrected, the anticipated time it is expected to continue; and steps taken or planned to reduce, eliminate, and prevent reoccurrence of the noncompliance.

b. The following shall be included as information which must be reported within 24 hours under this paragraph.
   i. Any unanticipated bypass which exceeds any effluent limitation in the permit.
   ii. Any upset which exceeds any effluent limitation in the permit.
   iii. Violation of a maximum daily discharge limitation for any of the pollutants listed by the Department in the permit required to be reported within 24 hours.
c. The Department may waive the written report on a case-by-case basis for reports under paragraph 2. b. of this section if the oral report has been received within 24 hours.

3. **Anticipated Noncompliance**. The permittee shall give advance notice to the Department of any planned changes in the permitted facility or activity which may result in noncompliance with permit requirements. The notice shall be submitted to the Department 60 days prior to such changes or activity.

4. **Compliance Schedules.** Reports of compliance or noncompliance with, or any progress reports on, interim and final requirements contained in any compliance schedule of the permit shall be submitted no later than 14 days following each schedule date. The report shall provide an explanation for the instance of noncompliance and a proposed schedule or anticipated date, for achieving compliance with the compliance schedule requirement.

5. **Other Noncompliance.** The permittee shall report all instances of noncompliance not reported under paragraphs 2, 3, and 6 of this section, at the time monitoring reports are submitted. The reports shall contain the information listed in paragraph 2. a. of this section.

6. **Other Information**. Where the permittee becomes aware that it failed to submit any relevant facts in a permit application, or submitted incorrect information in a permit application or in any report to the Department, it shall promptly submit such facts or information.

7. **Discharge Monitoring Reports.**
   a. Monitoring results shall be reported at the intervals specified in the permit.
   b. Monitoring results must be reported to the Department via the current method approved by the Department, unless the permittee has been granted a waiver from using the method. If the permittee has been granted a waiver, the permittee must use forms provided by the Department.
   c. Monitoring results shall be reported to the Department no later than the 28th day of the month following the end of the reporting period.

Section C – Bypass/Upset Requirements

1. **Definitions.**
   a. *Bypass*: the intentional diversion of waste streams from any portion of a treatment facility, except in the case of blending.
   b. *Severe Property Damage*: substantial physical damage to property, damage to the treatment facilities which causes them to become inoperable, or substantial and permanent loss of natural resources which can reasonably be expected to occur in the absence of a bypass. Severe property damage does not mean economic loss caused by delays in production.
   c. *Upset*: an exceptional incident in which there is unintentional and temporary noncompliance with technology based permit effluent limitations because of factors beyond the reasonable control of the permittee. An upset does not include noncompliance to the extent caused by operational error, improperly designed treatment facilities, inadequate treatment facilities, lack of preventive maintenance, or careless or improper operation.

2. **Bypass Requirements.**
   a. Bypass not exceeding limitations. The permittee may allow any bypass to occur which does not cause effluent limitations to be exceeded, but only if it also is for essential maintenance to assure efficient operation. These bypasses are not subject to the provisions of paragraphs 2. b. and 2. c. of this section.
   b. Notice.
      i. Anticipated bypass. If the permittee knows in advance of the need for a bypass, it shall submit prior notice, if possible at least 10 days before the date of the bypass.
      ii. Unanticipated bypass. The permittee shall submit notice of an unanticipated bypass as required in Section B – Reporting Requirements, paragraph 5 (24-hour notice).
   c. Prohibition of bypass.
      i. Bypass is prohibited, and the Department may take enforcement action against a permittee for bypass, unless:
         1. Bypass was unavoidable to prevent loss of life, personal injury, or severe property damage;
         2. There were no feasible alternatives to the bypass, such as the use of auxiliary treatment facilities, retention of untreated wastes, or maintenance during normal periods of equipment downtime. This condition is not satisfied if adequate back-up equipment should have been installed in the exercise of reasonable engineering judgment to prevent a bypass which occurred during normal periods of equipment downtime or preventive maintenance; and
         3. The permittee submitted notices as required under paragraph 2. b. of this section.
      ii. The Department may approve an anticipated bypass, after considering its adverse effects, if the Department determines that it will meet the three (3) conditions listed above in paragraph 2. c. i. of this section.

3. **Upset Requirements.**
   a. Effect of an upset. An upset constitutes an affirmative defense to an action brought for noncompliance with such technology based permit effluent limitations if the requirements of paragraph 3. b. of this section are met. No determination made during administrative review of claims that noncompliance was caused by upset, and before an action for noncompliance, is final administrative action subject to judicial review.
   b. Conditions necessary for a demonstration of upset. A permittee who wishes to establish the affirmative defense of upset shall demonstrate, through properly signed, contemporaneous operating logs, or other relevant evidence that:
      i. An upset occurred and that the permittee can identify the cause(s) of the upset;
      ii. The permitted facility was at the time being properly operated; and
      iii. The permittee submitted notice of the upset as required in Section B – Reporting Requirements, paragraph 2. b. ii. (24-hour notice).
      iv. The permittee complied with any remedial measures required under Section D – Administrative Requirements, paragraph 4.
   c. Burden of proof. In any enforcement proceeding, the permittee seeking to establish the occurrence of an upset has the burden of proof.

Section D – Administrative Requirements

1. **Duty to Comply.** The permittee must comply with all conditions of this permit. Any permit noncompliance constitutes a violation of the Missouri Clean Water Law and Federal Clean Water Act and is grounds for enforcement action; for permit termination, revocation and reissuance, or modification; or denial of a permit renewal application.
   a. The permittee shall comply with effluent standards or prohibitions established under section 307(a) of the Federal Clean Water Act for toxic pollutants and with standards for sewage sludge use or disposal established under section 405(d) of the CWA within the time provided in the regulations that establish these standards or prohibitions or standards for sewage sludge use or disposal, even if the permit has not yet been modified to incorporate the requirement.
   b. The Federal Clean Water Act provides that any person who violates section 301, 302, 306, 307, 308, 318 or 405 of the Act, or any permit condition or limitation implementing any such sections in a permit issued under section 402, or any requirement imposed in a pretreatment program approved under sections 402(a)(3) or 402(b)(8) of the Act, is subject to a civil penalty not to exceed $25,000 per day for each violation. The Federal Clean Water Act provides that any person who negligently violates sections 301, 302, 306, 307, 308, 318, or 405 of the Act, or any condition or limitation implementing any of such sections in a permit issued under section 402 of the Act, or any requirement

imposed in a pretreatment program approved under section 402(a)(3) or 402(b)(8) of the Act, is subject to criminal penalties of $2,500 to $25,000 per day of violation, or imprisonment of not more than one (1) year, or both. In the case of a second or subsequent conviction for a negligent violation, a person shall be subject to criminal penalties of not more than $50,000 per day of violation, or by imprisonment of not more than two (2) years, or both. Any person who knowingly violates such sections, or such conditions or limitations is subject to criminal penalties of $5,000 to $50,000 per day of violation, or imprisonment for not more than three (3) years, or both. In the case of a second or subsequent conviction for a knowing violation, a person shall be subject to criminal penalties of not more than $100,000 per day of violation, or imprisonment of not more than six (6) years, or both. Any person who knowingly violates section 301, 302, 303, 306, 307, 308, 318 or 405 of the Act, or any permit condition or limitation implementing any of such sections in a permit issued under section 402 of the Act, and who knows at that time that he thereby places another person in imminent danger of death or serious bodily injury, shall, upon conviction, be subject to a fine of not more than $250,000 or imprisonment of not more than 15 years, or both. In the case of a second or subsequent conviction for a knowing endangerment violation, a person shall be subject to a fine of not more than $500,000 or by imprisonment of not more than 30 years, or both. An organization, as defined in section 309(c)(3)(B)(iii) of the CWA, shall, upon conviction of violating the imminent danger provision, be subject to a fine of not more than $1,000,000 and can be fined up to $2,000,000 for second or subsequent convictions.

c. Any person may be assessed an administrative penalty by the EPA Director for violating section 301, 302, 306, 307, 308, 318 or 405 of this Act, or any permit condition or limitation implementing any of such sections in a permit issued under section 402 of this Act. Administrative penalties for Class I violations are not to exceed $10,000 per violation, with the maximum amount of any Class I penalty assessed not to exceed $25,000. Penalties for Class II violations are not to exceed $10,000 per day for each day during which the violation continues, with the maximum amount of any Class II penalty not to exceed $125,000.

d. It is unlawful for any person to cause or permit any discharge of water contaminants from any water contaminant or point source located in Missouri in violation of sections 644.006 to 644.141 of the Missouri Clean Water Law, or any standard, rule or regulation promulgated by the commission. In the event the commission or the director determines that any provision of sections 644.006 to 644.141 of the Missouri Clean Water Law or standard, rules, limitations or regulations promulgated pursuant thereto, or permits issued by, or any final abatement order, other order, or determination made by the commission or the director, or any filing requirement pursuant to sections 644.006 to 644.141 of the Missouri Clean Water Law or any other provision which this state is required to enforce pursuant to any federal water pollution control act, is being, was, or is in imminent danger of being violated, the commission or director may cause to have instituted a civil action in any court of competent jurisdiction for the injunctive relief to prevent any such violation or further violation or for the assessment of a penalty not to exceed $10,000 per day for each day, or part thereof, the violation occurred and continues to occur, or both, as the court deems proper. Any person who willfully or negligently commits any violation in this paragraph shall, upon conviction, be punished by a fine of not less than $2,500 nor more than $25,000 per day of violation, or by imprisonment for not more than one year, or both. Second and successive convictions for violation of the same provision of this paragraph by any person shall be punished by a fine of not more than $50,000 per day of violation, or by imprisonment for not more than two (2) years, or both.

2. **Duty to Reapply.**
   a. If the permittee wishes to continue an activity regulated by this permit after the expiration date of this permit, the permittee must apply for and obtain a new permit.
   b. A permittee with a currently effective site-specific permit shall submit an application for renewal at least 180 days before the expiration date of the existing permit, unless permission for a later date has been granted by the Department. (The Department shall not grant permission for applications to be submitted later than the expiration date of the existing permit.)
   c. A permittees with currently effective general permit shall submit an application for renewal at least 30 days before the existing permit expires, unless the permittee has been notified by the Department that an earlier application must be made. The Department may grant permission for a later submission date. (The Department shall not grant permission for applications to be submitted later than the expiration date of the existing permit.)

3. **Need to Halt or Reduce Activity Not a Defense.** It shall not be a defense for a permittee in an enforcement action that it would have been necessary to halt or reduce the permitted activity in order to maintain compliance with the conditions of this permit.

4. **Duty to Mitigate.** The permittee shall take all reasonable steps to minimize or prevent any discharge or sludge use or disposal in violation of this permit which has a reasonable likelihood of adversely affecting human health or the environment.

5. **Proper Operation and Maintenance**. The permittee shall at all times properly operate and maintain all facilities and systems of treatment and control (and related appurtenances) which are installed or used by the permittee to achieve compliance with the conditions of this permit. Proper operation and maintenance also includes adequate laboratory controls and appropriate quality assurance procedures. This provision requires the operation of back-up or auxiliary facilities or similar systems which are installed by a permittee only when the operation is necessary to achieve compliance with the conditions of the permit.

6. **Permit Actions.**
   a. Subject to compliance with statutory requirements of the Law and Regulations and applicable Court Order, this permit may be modified, suspended, or revoked in whole or in part during its term for cause including, but not limited to, the following:
      i. Violations of any terms or conditions of this permit or the law;
      ii. Having obtained this permit by misrepresentation or failure to disclose fully any relevant facts;
      iii. A change in any circumstances or conditions that requires either a temporary or permanent reduction or elimination of the authorized discharge; or
      iv. Any reason set forth in the Law or Regulations.
   b. The filing of a request by the permittee for a permit modification, revocation and reissuance, or termination, or a notification of planned changes or anticipated noncompliance does not stay any permit condition.

7. **Permit Transfer.**
   a. Subject to 10 CSR 20-6.010, an operating permit may be transferred upon submission to the Department of an application to transfer signed by the existing owner and the new owner, unless prohibited by the terms of the permit. Until such time the permit is officially transferred, the original permittee remains responsible for complying with the terms and conditions of the existing permit.
   b. The Department may require modification or revocation and reissuance of the permit to change the name of the permittee and incorporate such other requirements as may be necessary under the Missouri Clean Water Law or the Federal Clean Water Act.
   c. The Department, within 30 days of receipt of the application, shall notify the new permittee of its intent to revoke or reissue or transfer the permit.

8. **Toxic Pollutants.** The permittee shall comply with effluent standards or prohibitions established under section 307(a) of the Federal Clean Water Act for toxic pollutants and with standards for sewage sludge use or disposal established under section 405(d) of the Federal Clean Water Act within the time provided in the regulations that establish these standards or prohibitions or standards for sewage sludge use or disposal, even if the permit has not yet been modified to incorporate the requirement.

9. **Property Rights.** This permit does not convey any property rights of any sort, or any exclusive privilege.

10. **Duty to Provide Information.** The permittee shall furnish to the Department, within a reasonable time, any information which the Department may request to determine whether cause exists for modifying, revoking and reissuing, or terminating this permit or to determine compliance with this permit. The permittee shall also furnish to the Department upon request, copies of records required to be kept by this permit.

11. **Inspection and Entry.** The permittee shall allow the Department, or an authorized representative (including an authorized contractor acting as a representative of the Department), upon presentation of credentials and other documents as may be required by law, to:
    a. Enter upon the permittee's premises where a regulated facility or activity is located or conducted, or where records must be kept under the conditions of the permit;
    b. Have access to and copy, at reasonable times, any records that must be kept under the conditions of this permit;
    c. Inspect at reasonable times any facilities, equipment (including monitoring and control equipment), practices, or operations regulated or required under this permit; and
    d. Sample or monitor at reasonable times, for the purposes of assuring permit compliance or as otherwise authorized by the Federal Clean Water Act or Missouri Clean Water Law, any substances or parameters at any location.

12. **Closure of Treatment Facilities.**
    a. Persons who cease operation or plan to cease operation of waste, wastewater, and sludge handling and treatment facilities shall close the facilities in accordance with a closure plan approved by the Department.
    b. Operating Permits under 10 CSR 20-6.010 or under 10 CSR 20-6.015 are required until all waste, wastewater, and sludges have been disposed of in accordance with the closure plan approved by the Department and any disturbed areas have been properly stabilized. Disturbed areas will be considered stabilized when perennial vegetation, pavement, or structures using permanent materials cover all areas that have been disturbed. Vegetative cover, if used, shall be at least 70% plant density over 100% of the disturbed area.

13. **Signatory Requirement.**
    a. All permit applications, reports required by the permit, or information requested by the Department shall be signed and certified. (See 40 CFR 122.22 and 10 CSR 20-6.010)
    b. The Federal Clean Water Act provides that any person who knowingly makes any false statement, representation, or certification in any record or other document submitted or required to be maintained under this permit, including monitoring reports or reports of compliance or non-compliance shall, upon conviction, be punished by a fine of not more than $10,000 per violation, or by imprisonment for not more than six (6) months per violation, or by both.
    c. The Missouri Clean Water Law provides that any person who knowingly makes any false statement, representation or certification in any application, record, report, plan, or other document filed or required to be maintained pursuant to sections 644.006 to 644.141 shall, upon conviction, be punished by a fine of not more than ten thousand dollars, or by imprisonment for not more than six months, or by both.

14. **Severability.** The provisions of the permit are severable, and if any provision of the permit, or the application of any provision of the permit to any circumstance, is held invalid, the application of such provision to other circumstances, and the remainder of the permit, shall not be affected thereby.

No Fee required for permit renewal 1/3/12 (R)

AP 9248

Printed by mstees at SDL022.mlock.com. Printed on 13 December 2011

MISSOURI DEPARTMENT OF NATURAL RESOURCES
WATER PROTECTION PROGRAM, WATER POLLUTION CONTROL BRANCH
FORM A – APPLICATION FOR CONSTRUCTION OR OPERATING PERMIT UNDER MISSOURI CLEAN WATER LAW

FOR AGENCY USE ONLY	
CHECK NUMBER NONE SENT	
DATE RECEIVED 1/3/12	FEE SUBMITTED 0 (R)

RECEIVED DEC 19 2011 Kansas City Regional Office

Note ▶ PLEASE READ THE ACCOMPANYING INSTRUCTIONS BEFORE COMPLETING THIS FORM.

1. This application is for:
   - ☐ An operating permit and antidegradation review public notice
   - ☐ A construction permit following an appropriate operating permit and antidegradation review public notice
   - ☐ A construction permit and concurrent operating permit and antidegradation review public notice
   - ☐ A construction permit (submitted before Aug. 30, 2008 or antidegradation review is not required)
   - ☐ An operating permit for a new or unpermitted facility — Construction Permit # _____
   - ☒ An operating permit renewal: permit # MO- 0111465 — Expiration Date 7-19-2012
   - ☐ An operating permit modification: permit # MO-_____ — Reason: _____

1.1 Is the appropriate fee included with the application? (See instructions for appropriate fee) ☐ YES ☒ NO

2. FACILITY

NAME		TELEPHONE WITH AREA CODE	
Waterloo Industries, Inc		660 829-8722	
		FAX 414 766-6570	
ADDRESS (PHYSICAL)	CITY	STATE	ZIP CODE
1500 Waterloo Drive	Sedalia	MO	65301

3. OWNER

NAME	E-MAIL ADDRESS	TELEPHONE WITH AREA CODE	
Waterloo Industries, Inc		660 826-0960	
		FAX 660 829-8796	
ADDRESS (MAILING)	CITY	STATE	ZIP CODE
1500 Waterloo Drive	Sedalia	MO	65301

3.1 Request review of draft permit prior to public notice? ☒ YES ☐ NO

4. CONTINUING AUTHORITY

NAME		TELEPHONE WITH AREA CODE	
Waterloo Industries, Inc		660 826-0960	
		FAX 660 829-8796	
ADDRESS (MAILING)	CITY	STATE	ZIP CODE
1500 Waterloo Drive	Sedalia	MO	65301

5. OPERATOR

NAME	CERTIFICATE NUMBER	TELEPHONE WITH AREA CODE	
Waterloo Industries, Inc	N/A	660 826-0960	
		FAX 660 829-8796	
ADDRESS (MAILING)	CITY	STATE	ZIP CODE
1500 Waterloo Drive	Sedalia	MO	65301

6. FACILITY CONTACT

NAME	TITLE	TELEPHONE WITH AREA CODE
Michael L. Stees	E.H.S. Engineer	660 829-8722
		FAX 414 766-6570

7. ADDITIONAL FACILITY INFORMATION

7.1 Legal Description of Outfalls. (Attach additional sheets if necessary.)

Outfall 001 GPS N38 43.691'
W093 15.009'

Outfall 004 GPS N38 43.651'
W093 14.645'

7.2 Primary Standard Industrial Classification (SIC) and Facility North American Industrial Classification System (NAICS) Codes.
001 – SIC 3469 and NAICS 332439 002 – SIC _____ and NAICS _____
003 – SIC _____ and NAICS _____ 004 – SIC 3469 and NAICS 332439

MO 780-1479 (01-09)

8. ADDITIONAL FORMS AND MAPS NECESSARY TO COMPLETE THIS APPLICATION (Complete all forms that are applicable.)

A. Is your facility a manufacturing, commercial, mining or silviculture waste treatment facility? YES ☒ NO ☐
If yes, complete Form C (unless storm water only, then complete U.S. Environmental Protection Agency Form 2F per Item C below).

B. Is your facility considered a "Primary Industry" under EPA guidelines: YES ☐ NO ☒
If yes, complete Forms C and D.

C. Is application for storm water discharges only? YES ☒ NO ☐
If yes, complete EPA Form 2F.

D. Attach a map showing all outfalls and the receiving stream at 1" = 2,000' scale.

E. Is wastewater land applied? If yes, complete Form I. YES ☐ NO ☒

F. Is sludge, biosolids, ash or residuals generated, treated, stored or land applied? YES ☐ NO ☒
If yes, complete Form R.

9. DOWNSTREAM LANDOWNER(S) Attach additional sheets as necessary. See Instructions. (PLEASE SHOW LOCATION ON MAP. SEE 8.D ABOVE).

NAME			
John R. Vandyne			
ADDRESS	CITY	STATE	ZIP CODE
23888 Georgetown Rd.	Sedalia	MO	65301

10. I certify that I am familiar with the information contained in the application, that to the best of my knowledge and belief such information is true, complete and accurate, and if granted this permit, I agree to abide by the Missouri Clean Water Law and all rules, regulations, orders and decisions, subject to any legitimate appeal available to applicant under the Missouri Clean Water Law to the Missouri Clean Water Commission.

NAME AND OFFICIAL TITLE (TYPE OR PRINT)	TELEPHONE WITH AREA CODE
Russell T. Foote General Mgr. of Sedalia Operations	660-826-0960
SIGNATURE	DATE SIGNED
Russell T. Foote	12-16-11

MO 780-1479 (01-09)

BEFORE MAILING, PLEASE ENSURE ALL SECTIONS ARE COMPLETED AND ADDITIONAL FORMS, IF APPLICABLE, ARE INCLUDED.

Submittal of an incomplete application may result in the application being returned.

HAVE YOU INCLUDED:

- ☐ Appropriate Fees?
- ☐ Map at 1" = 2000' scale?
- ☐ Signature?
- ☐ Form C, if applicable?
- ☐ Form D, if applicable?
- ☐ Form 2F, if applicable?
- ☐ Form I (Irrigation), if applicable?
- ☐ Form R (Sludge), if applicable?

RECEIVED
DEC 19 2011
Kansas City Regional Office

MISSOURI DEPARTMENT OF NATURAL RESOURCES
WATER PROTECTION PROGRAM, WATER POLLUTION BRANCH
(SEE MAP FOR APPROPRIATE REGIONAL OFFICE)

FORM C – APPLICATION FOR DISCHARGE PERMIT – MANUFACTURING, COMMERCIAL, MINING AND SILVICULTURE OPERATIONS

FOR AGENCY USE ONLY	
CHECK NO.	
DATE RECEIVED	FEE SUBMITTED

NOTE: DO NOT ATTEMPT TO COMPLETE THIS FORM BEFORE READING THE ACCOMPANYING INSTRUCTIONS

1.00 NAME OF FACILITY

Waterloo Industries, Inc

1.10 THIS FACILITY IS NOW IN OPERATION UNDER MISSOURI OPERATING PERMIT NUMBER

MO-0111465

1.20 THIS IS A NEW FACILITY AND WAS CONSTRUCTED UNDER MISSOURI CONSTRUCTION PERMIT NUMBER (COMPLETE ONLY IF THIS FACILITY DOES NOT HAVE AN OPERATING PERMIT).

N/A

2.00 LIST THE STANDARD INDUSTRIAL CLASSIFICATION (SIC) CODES APPLICABLE TO YOUR FACILITY (FOUR DIGIT CODE)

A. FIRST 3469 B. SECOND

C. THIRD D. FOURTH

2.10 FOR EACH OUTFALL GIVE THE LEGAL DESCRIPTION.

OUTFALL NUMBER (LIST) NW ¼ NW ¼ SEC 33 T 46N R 21W Pettis County

001 Stormwater Run Off
004 Stormwater Run Off

2.20 FOR EACH OUTFALL LIST THE NAME OF THE RECEIVING WATER.

OUTFALL NUMBER (LIST)	RECEIVING WATER
001	Sewer Branch
004	Sewer Branch

2.30 BRIEFLY DESCRIBE THE NATURE OF YOUR BUSINESS:

Cold rolled steel is cut, formed, welded, cleaned, painted and packaged for shipment. Products consist of tool storage equipment.

RECEIVED
DEC 19 2011
Kansas City Regional Office

2.40

A. Attach a line drawing showing the water flow through the facility. Indicate sources of intake water, operations contributing wastewater to the effluent and treatment units labeled to correspond to the more detailed descriptions in Item B. Construct a water balance on the line drawing by showing average flows between intakes, operations, treatment units, public sewers and outfalls. If a water balance cannot be determined (e.g., for certain mining activities), provide a pictorial description of the nature and amount of any sources of water and any collection or treatment measures.

B. For each outfall, provide a description of 1. All operations contributing wastewater to the effluent, including process wastewater, sanitary wastewater, cooling water and storm water runoff. 2. The average flow contributed by each operation. 3. The treatment received by the wastewater. Continue on additional sheets if necessary.

1. OUTFALL NO.	2. OPERATION(S) CONTRIBUTING FLOW		3. TREATMENT	
(LIST)	A. OPERATION (LIST)	B. AVERAGE FLOW (INCLUDE UNITS) (MAXIMUM FLOW)	A. DESCRIPTION	B. LIST CODES FROM TABLE A
001	Storm Water run off	Dependant on rainfall	None	N/A
004	Storm Water run off	Dependant on rainfall	None	N/A

RECEIVED
DEC 19 2011
Kansas City Regional Office

2.40 CONTINUED

C. EXCEPT FOR STORM RUNOFF, LEAKS, OR SPILLS, ARE ANY OF THE DISCHARGES DESCRIBED IN ITEMS A OR B INTERMITTENT OR SEASONAL?

☐ **YES** *(COMPLETE THE FOLLOWING TABLE)* ☒ **NO** *(GO TO SECTION 2.50)*

1. OUTFALL NUMBER *(list)*	2. OPERATION(S) CONTRIBUTING FLOW *(list)*	3. FREQUENCY		4. FLOW				
		A. DAYS PER WEEK *(specify average)*	B. MONTHS PER YEAR *(specify average)*	A. FLOW RATE *(in mgd)*		B. TOTAL VOLUME *(specify with units)*		C. DURATION *(in days)*
				1. LONG TERM AVERAGE	2. MAXIMUM DAILY	4. LONG TERM DAILY	3. MAXIMUM AVERAGE	

2.50 MAXIMUM PRODUCTION

A. DOES AN EFFLUENT GUIDELINE LIMITATION PROMULGATED BY EPA UNDER SECTION 304 OF THE CLEAN WATER ACT APPLY TO YOUR FACILITY?

☐ **YES** *(COMPLETE B.)* ☒ **NO** *(GO TO SECTION 2.60)*

B. ARE THE LIMITATIONS IN THE APPLICABLE EFFLUENT GUIDELINE EXPRESSED IN TERMS OF PRODUCTION *(OR OTHER MEASURE OF OPERATION)*?

☐ **YES** *(COMPLETE C.)* ☒ **NO** *(GO TO SECTION 2.60)*

C. IF YOU ANSWERED "YES" TO B. LIST THE QUANTITY THAT REPRESENTS AN ACTUAL MEASUREMENT OF YOUR MAXIMUM LEVEL OF PRODUCTION, EXPRESSED IN THE TERMS AND UNITS USED IN THE APPLICABLE EFFLUENT GUIDELINE AND INDICATE THE AFFECTED OUTFALLS.

1. MAXIMUM QUANTITY			2. AFFECTED OUTFALLS *(list outfall numbers)*
A. QUANTITY PER DAY	B. UNITS OF MEASURE	C. OPERATION, PRODUCT, MATERIAL, ETC. *(specify)*	

2.60 IMPROVEMENTS

A. ARE YOU NOW REQUIRED BY ANY FEDERAL, STATE OR LOCAL AUTHORITY TO MEET ANY IMPLEMENTATION SCHEDULE FOR THE CONSTRUCTION, UPGRADING OR OPERATION OF WASTEWATER TREATMENT EQUIPMENT OR PRACTICES OR ANY OTHER ENVIRONMENTAL PROGRAMS THAT MAY AFFECT THE DISCHARGES DESCRIBED IN THIS APPLICATION? THIS INCLUDES, BUT IS NOT LIMITED TO, PERMIT CONDITIONS, ADMINISTRATIVE OR ENFORCEMENT ORDERS, ENFORCEMENT COMPLIANCE SCHEDULE LETTERS, STIPULATIONS, COURT ORDERS AND GRANT OR LOAN CONDITIONS.

☐ **YES** *(COMPLETE THE FOLLOWING TABLE)* ☒ **NO** *(GO TO 3.00)*

1. IDENTIFICATION OF CONDITION, AGREEMENT, ETC.	2. AFFECTED OUTFALLS		3. BRIEF DESCRIPTION OF PROJECT	4. FINAL COMPLIANCE DATE	
				A. REQUIRED	B. PROJECTED

RECEIVED
DEC 19 2011
Kansas City Regional Office

B. OPTIONAL: YOU MAY ATTACH ADDITIONAL SHEETS DESCRIBING ANY ADDITIONAL WATER POLLUTION CONTROL PROGRAMS *(OR OTHER ENVIRONMENTAL PROJECTS WHICH MAY EFFECT YOUR DISCHARGES)* YOU NOW HAVE UNDER WAY OR WHICH YOU PLAN. INDICATE WHETHER EACH PROGRAM IS NOW UNDER WAY OR PLANNED, AND INDICATE YOUR ACTUAL OR PLANNED SCHEDULES FOR CONSTRUCTION.

☐ **MARK "X" IF DESCRIPTION OF ADDITIONAL CONTROL PROGRAMS IS ATTACHED.**

3.00 INTAKE AND EFFLUENT CHARACTERISTICS

A. & B. SEE INSTRUCTIONS BEFORE PROCEEDING – COMPLETE ONE TABLE FOR EACH OUTFALL – ANNOTATE THE OUTFALL NUMBER IN THE SPACE PROVIDED.
NOTE: TABLE 1 IS INCLUDED ON SEPARATE SHEETS NUMBERED FROM PAGE 6 TO PAGE 7.

C. USE THE SPACE BELOW TO LIST ANY OF THE POLLUTANTS LISTED IN PART B OF THE INSTRUCTIONS, WHICH YOU KNOW OR HAVE REASON TO BELIEVE IS DISCHARGED OR MAY BE DISCHARGED FROM ANY OUTFALL. FOR EVERY POLLUTANT YOU LIST, BRIEFLY DESCRIBE THE REASONS YOU BELIEVE IT TO BE PRESENT AND REPORT ANY ANALYTICAL DATA IN YOUR POSSESSION.

1. POLLUTANT	2. SOURCE	1. POLLUTANT	2. SOURCE
N/A			

RECEIVED
DEC 19 2011
Kansas City Regional Office

3.10 BIOLOGICAL TOXICITY TESTING DATA

DO YOU HAVE ANY KNOWLEDGE OR REASON TO BELIEVE THAT ANY BIOLOGICAL TEST FOR ACUTE OR CHRONIC TOXICITY HAS BEEN MADE ON ANY OF YOUR DISCHARGES OR ON A RECEIVING WATER IN RELATION TO YOUR DISCHARGE WITHIN THE LAST THREE YEARS?

☐ **YES** *(IDENTIFY THE TEST(S) AND DESCRIBE THEIR PURPOSES BELOW.)* ☒ **NO** *(GO TO 3.20)*

3.20 CONTRACT ANALYSIS INFORMATION

WERE ANY OF THE ANALYSES REPORTED PERFORMED BY A CONTRACT LABORATORY OR CONSULTING FIRM?

☒ **YES** *(LIST THE NAME, ADDRESS AND TELEPHONE NUMBER OF AND POLLUTANTS ANALYZED BY EACH SUCH LABORATORY OR FIRM BELOW.)* ☐ **NO** *(GO TO 3.30)*

A. NAME	B. ADDRESS	C. TELEPHONE *(area code and number)*	D. POLLUTANTS ANALYZED *(list)*
Engineering Surveys & Services Lab	1108 Fay Street Columbia, MO 65201	(573) 449-0230	pH Total Suspended Solids Settleable Solids Oil & Grease

RECEIVED
DEC 19 2011
Kansas City Regional Office

3.30 CERTIFICATION

I CERTIFY UNDER PENALTY OF LAW THAT I HAVE PERSONALLY EXAMINED AND AM FAMILIAR WITH THE INFORMATION SUBMITTED IN THIS APPLICATION AND ALL ATTACHMENTS AND THAT, BASED ON MY INQUIRY OF THOSE INDIVIDUALS IMMEDIATELY RESPONSIBLE FOR OBTAINING THE INFORMATION, I BELIEVE THAT THE INFORMATION IS TRUE, ACCURATE AND COMPLETE. I AM AWARE THAT THERE ARE SIGNIFICANT PENALTIES FOR SUBMITTING FALSE INFORMATION, INCLUDING THE POSSIBILITY OF FINE AND IMPRISONMENT.

NAME AND OFFICIAL TITLE (TYPE OR PRINT)	TELEPHONE NUMBER (AREA CODE AND NUMBER
Russell T. Foote General Mgr. of Sedalia Operations	660-826-0960
SIGNATURE (SEE INSTRUCTIONS)	DATE SIGNED
Russell T. Foote	12-16-11

PLEASE PRINT OR TYPE. You may report some or all of this information on separate sheets *(use the same format)* instead of completing these pages.
SEE INSTRUCTIONS.

FORM C
TABLE 1 FOR 3.00 ITEM A AND B

INTAKE AND EFFLUENT CHARACTERISTICS *(continued from page 3 of Form 2-C)*

OUTFALL NO. 001

PART A – You must provide the results of at least one analysis for every pollutant in this table. Complete one table for each outfall. See instructions for additional details.

1. POLLUTANT	2. EFFLUENT							3. UNITS *(specify if blank)*		4. INTAKE *(optional)*		
	A. MAXIMUM DAILY VALUE		B. MAXIMUM 30 DAY VALUE *(if available)*		C. LONG TERM AVRG. VALUE *(if available)*		D. NO. OF ANAL-YSES	A. CONCEN-TRATION	B. MASS	A. LONG TERM AVRG. VALUE		B. NO. OF ANAL-YSES
	(1) CONCENTRATION	(2) MASS	(1) CONCENTRATION	(2) MASS	(1) CONCENTRATION	(2) MASS				(1) CONCENTRATION	(2) MASS	
A. Biochemical Oxygen Demand *(BOD)*												
B. Chemical Oxygen Demand *(COD)*												
C. Total Organic Carbon *(TOC)*												
D. Total Suspended Solids *(TSS)*					47.7		3	mg/l				
E. Ammonia *(as N)*												
F. Flow	VALUE Dependant on rainfall		VALUE		VALUE					VALUE		
G. Temperature *(winter)*	VALUE Unknown		VALUE		VALUE			°C		VALUE		
H. Temperature *(summer)*	VALUE Unknown		VALUE		VALUE			°C		VALUE		
I. pH	MINIMUM 6.0	MAXIMUM 9.0	MINIMUM	MAXIMUM				STANDARD UNITS				

PART B – Mark "X" in column 2-a for each pollutant you know or have reason to believe is present. Mark "X" in column 2-b for each pollutant you believe to be absent. If you mark column 2-a for any pollutant, you must provide the results of at least one analysis for that pollutant. Complete one table for each outfall. See the instructions for additional details and requirements.

1. POLLUTANT AND CAS NUMBER *(if available)*	2. MARK "X"		3. EFFLUENT							4. UNITS		5. INTAKE *(optional)*		
	A. BE-LIEVED PRE-SENT	B. BE-LIEVED AB-SENT	A. MAXIMUM DAILY VALUE		B. MAXIMUM 30 DAY VALUE *(if available)*		C. LONG TERM AVRG. VALUE *(if available)*		D. NO. OF ANAL-YSES	A. CONCEN-TRATION	B. MASS	A. LONG TERM AVRG. VALUE		B. NO. OF ANAL-YSES
			(1) CONCENTRATION	(2) MASS	(1) CONCENTRATION	(2) MASS	(1) CONCENTRATION	(2) MASS				(1) CONCENTRATION	(2) MASS	
A. Bromide (24959-67-9)		X												
B. Chlorine Total Residual		X												
C. Color		X												
D. Fecal Coliform		X												
E. Fluoride (16984-48-8)		X												
F. Nitrate–Nitrite *(as N)*		X												

MO 780-1514 (6-04)

RECEIVED
DEC 19 2011
Kansas City Regional Office

Printed by mstees at SDL022.mlock.com. Printed on 13 December 2011

CONTINUED FROM FRONT Outfall 001

1. POLLUTANT AND CAS NUMBER (if available)	2. MARK "X" A. BE-LIEVED PRE-SENT	2. MARK "X" B. BE-LIEVED AB-SENT	3. EFFLUENT A. MAXIMUM DAILY VALUE (1) CONCENTRATION	A. MAXIMUM DAILY VALUE (2) MASS	B. MAXIMUM 30 DAY VALUE (if available) (1) CONCENTRATION	B. MAXIMUM 30 DAY VALUE (2) MASS	C. LONG TERM AVRG. VALUE (if available) (1) CONCENTRATION	C. LONG TERM AVRG. VALUE (2) MASS	D. NO. OF ANAL-YSES	4. UNITS A. CONCEN-TRATION	4. UNITS B. MASS	5. INTAKE (optional) A. LONG TERM AVRG. VALUE (1) CONCENTRATION	A. LONG TERM AVRG. VALUE (2) MASS	B. NO. OF ANAL-YSES
G. Nitrogen Total Organic *(as N)*		X												
H. Oil and Grease	X													
I. Phosphorus *(as P)* Total (7723-14-0)		X					1.9		3	mg/l				
J. RADIOACTIVITY														
(1) Alpha Total		X												
(2) Beta Total		X												
(3) Radium Total		X												
(4) Radium 226 Total		X												
K. Sulfate *(as SO^4)* (14808-79-8)		X												
L. Sulfide *(as S)*		X												
M. Sulfite *(as SO^3)* (14265-45-3)		X												
N. Surfactants		X												
O. Aluminum Total (7429-90-5)		X												
P. Barium Total (7440-39-3)		X												
Q. Boron Total (7440-42-8)		X												
R. Cobalt Total (7440-48-4)		X												
S. Iron total (7439-89-6)		X												
T. Magnesium Total (7439-95-4)		X												
U. Molybdenum Total (7439-98-7)		X												
V. Manganese Total (7439-96-5)		X												
W. Tin Total (7440-31-5)		X												
X. Titanium Total (7440-32-6)		X												

MO 780-1514 (6-04)

RECEIVED
DEC 19 2011
Kansas City Regional Office

Printed by mstees at SDL022.mlock.com. Printed on 13 December 2011

PLEASE PRINT OR TYPE. You may report some or all of this information on separate sheets *(use the same format)* instead of completing these pages.
SEE INSTRUCTIONS.

FORM C
TABLE 1 FOR 3.00 ITEM A AND B

INTAKE AND EFFLUENT CHARACTERISTICS *(continued from page 3 of Form 2-C)*

OUTFALL NO. 004

PART A – You must provide the results of at least one analysis for every pollutant in this table. Complete one table for each outfall. See instructions for additional details.

1. POLLUTANT	2. EFFLUENT							3. UNITS *(specify if blank)*		4. INTAKE *(optional)*		
	A. MAXIMUM DAILY VALUE		B. MAXIMUM 30 DAY VALUE *(if available)*		C. LONG TERM AVRG. VALUE *(if available)*		D. NO. OF ANAL-YSES	A. CONCEN-TRATION	B. MASS	A. LONG TERM AVRG. VALUE		B. NO. OF ANAL-YSES
	(1) CONCENTRATION	(2) MASS	(1) CONCENTRATION	(2) MASS	(1) CONCENTRATION	(2) MASS				(1) CONCENTRATION	(2) MASS	
A. Biochemical Oxygen Demand *(BOD)*												
B. Chemical Oxygen Demand *(COD)*												
C. Total Organic Carbon *(TOC)*												
D. Total Suspended Solids *(TSS)*					35.3		3	mg/l				
E. Ammonia *(as N)*												
F. Flow	VALUE Dependant on rainfall		VALUE		VALUE					VALUE		
G. Temperature *(winter)*	VALUE Unknown		VALUE		VALUE			°C		VALUE		
H. Temperature *(summer)*	VALUE Unknown		VALUE		VALUE			°C		VALUE		
I. pH	MINIMUM 6	MAXIMUM 9	MINIMUM	MAXIMUM				STANDARD UNITS				

PART B – Mark "X" in column 2-a for each pollutant you know or have reason to believe is present. Mark "X" in column 2-b for each pollutant you believe to be absent. If you mark column 2-a for any pollutant, you must provide the results of at least one analysis for that pollutant. Complete one table for each outfall. See the instructions for additional details and requirements.

1. POLLUTANT AND CAS NUMBER *(if available)*	2. MARK "X"		3. EFFLUENT							4. UNITS		5. INTAKE *(optional)*		
	A. BE-LIEVED PRE-SENT	B. BE-LIEVED AB-SENT	A. MAXIMUM DAILY VALUE		B. MAXIMUM 30 DAY VALUE *(if available)*		C. LONG TERM AVRG. VALUE *(if available)*		D. NO. OF ANAL-YSES	A. CONCEN-TRATION	B. MASS	A. LONG TERM AVRG. VALUE		B. NO. OF ANAL-YSES
			(1) CONCENTRATION	(2) MASS	(1) CONCENTRATION	(2) MASS	(1) CONCENTRATION	(2) MASS				(1) CONCENTRATION	(2) MASS	
A. Bromide (24959-67-9)		X												
B. Chlorine Total Residual		X												
C. Color		X												
D. Fecal Coliform		X												
E. Fluoride (16984-48-8)		X												
F. Nitrate–Nitrite *(as N)*		X												

MO 780-1514 (6-04)

RECEIVED
DEC 19 2011
Kansas City Regional Office

Printed by mstees at SDL022.mlock.com. Printed on 13 December 2011

CONTINUED FROM FRONT Outfall 004

1. POLLUTANT AND CAS NUMBER (if available)	2. MARK "X" A. BELIEVED PRESENT	2. MARK "X" B. BELIEVED ABSENT	3. EFFLUENT A. MAXIMUM DAILY VALUE (1) CONCENTRATION	A. MAXIMUM DAILY VALUE (2) MASS	B. MAXIMUM 30 DAY VALUE (if available) (1) CONCENTRATION	B. MAXIMUM 30 DAY VALUE (2) MASS	C. LONG TERM AVRG. VALUE (if available) (1) CONCENTRATION	C. LONG TERM AVRG. VALUE (2) MASS	D. NO. OF ANALYSES	4. UNITS A. CONCENTRATION	4. UNITS B. MASS	5. INTAKE (optional) A. LONG TERM AVRG. VALUE (1) CONCENTRATION	A. LONG TERM AVRG. VALUE (2) MASS	B. NO. OF ANALYSES
G. Nitrogen Total Organic *(as N)*		X												
H. Oil and Grease	X						1.3		3	mg/l				
I. Phosphorus *(as P)* Total (7723-14-0)		X												
J. RADIOACTIVITY														
(1) Alpha Total		X												
(2) Beta Total		X												
(3) Radium Total		X												
(4) Radium 226 Total		X												
K. Sulfate *(as SO^4)* (14808-79-8)		X												
L. Sulfide *(as S)*		X												
M. Sulfite *(as SO^3)* (14265-45-3)		X												
N. Surfactants		X												
O. Aluminum Total (7429-90-5)		X												
P. Barium Total (7440-39-3)		X												
Q. Boron Total (7440-42-8)		X												
R. Cobalt Total (7440-48-4)		X												
S. Iron total (7439-89-6)		X												
T. Magnesium Total (7439-95-4)		X												
U. Molybdenum Total (7439-98-7)		X												
V. Manganese Total (7439-96-5)		X												
W. Tin Total (7440-31-5)		X												
X. Titanium Total (7440-32-6)		X												

MO 780-1514 (6-04)

RECEIVED
DEC 19 2011
Kansas City Regional Office

Printed by mstees at SDL022.mlock.com. Printed on 13 December 2011

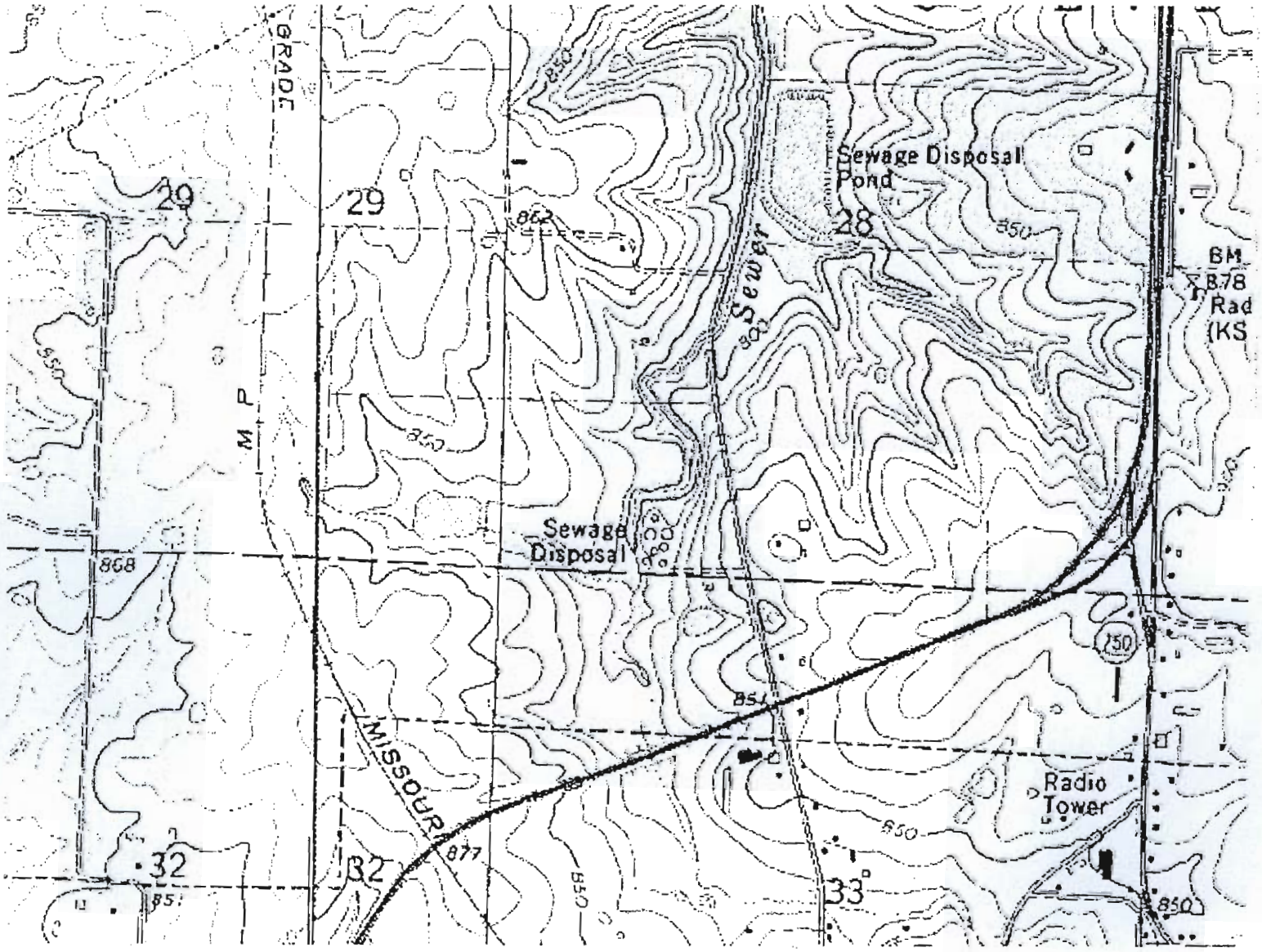

RECEIVED
DEC 19 2011
Kansas City Regional Office

Waterloo Industries Inc. - Area Overview

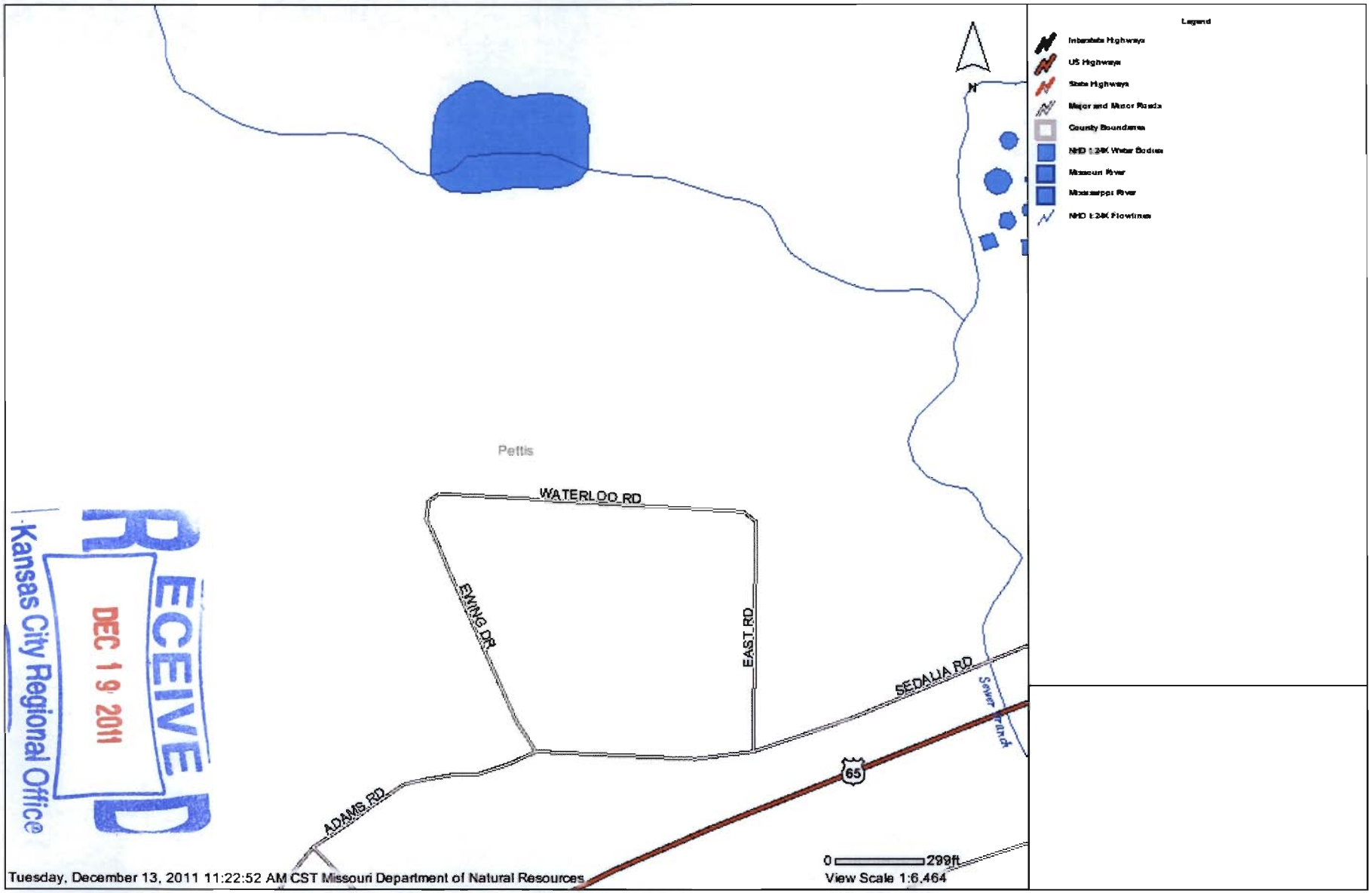

RECEIVED
DEC 19 2011
Kansas City Regional Office

Page 11

Missouri Department of Natural Resources

Disclaimer: Although this map has been compiled by the Missouri Department of Natural Resources, no warranty, expressed or implied, is made by the department as to the accuracy of the data and related materials. The act of distribution shall not constitute any such warranty, and no responsibility is assumed by the department in the use of these data or related materials.

Printed by mslees at SDL022.mlock.com. Printed on 13 December 2011

RECEIVED
DEC 19 2011
Kansas City Regional Office

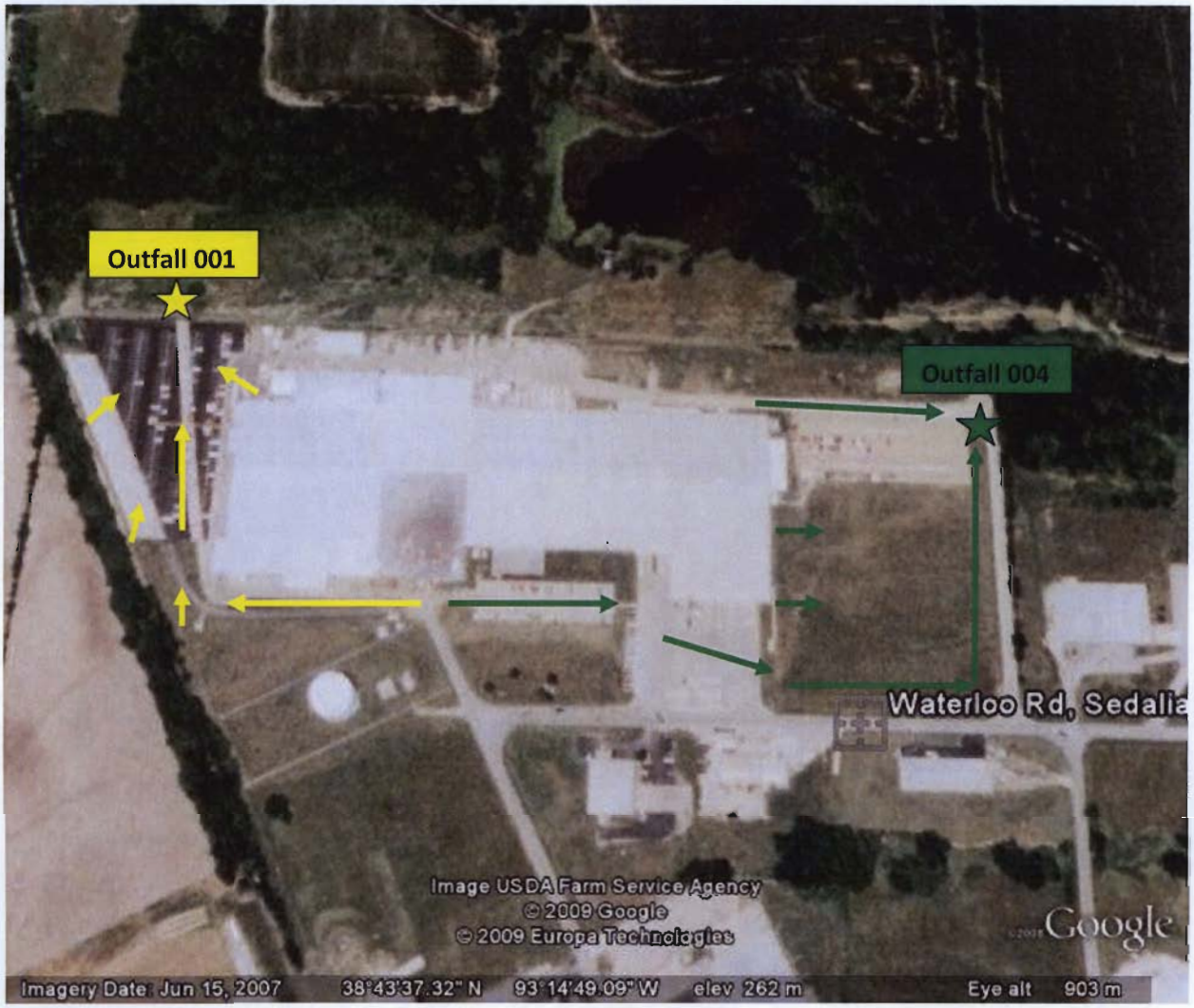

Outfall #001 – Stormwater run-off from the plant site
Design flow approximately 2,858,400 gallons per day.
Average flow is 11,322 gallons per day, actual flow is dependent upon rainfall.

Outfall #004 – Stormwater run-off from the plant site
Design flow approximately 2,390,400 gallons per day.
Average flow is 11,653 gallons per day, actual flow is dependent upon rainfall.

RECEIVED
DEC 19 2011
Kansas City Regional Office

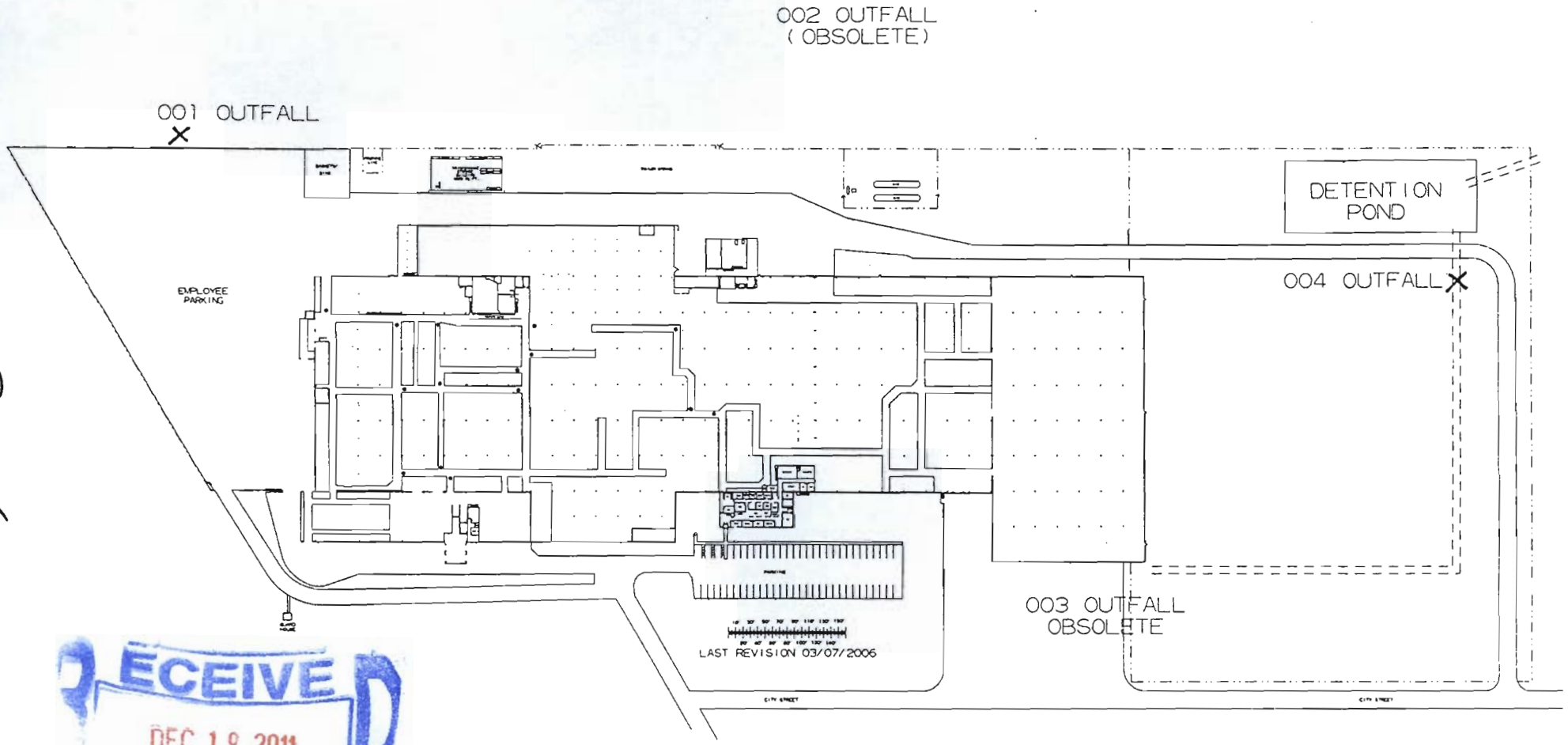

RECEIVED
DEC 19 2011
City Regional Office

g:\Maps\SEDL\Plant.dgn 3/31/2006 2:58:23 PM

Page 14

Outfall 002 Non-Contact Cooling Water is obsolete as of 9-1-2005 because of installation of Chiller Units for cooling water. June 2006 our lease on the pond will end and Waterloo Industries, Inc. will not have access to outfall 002

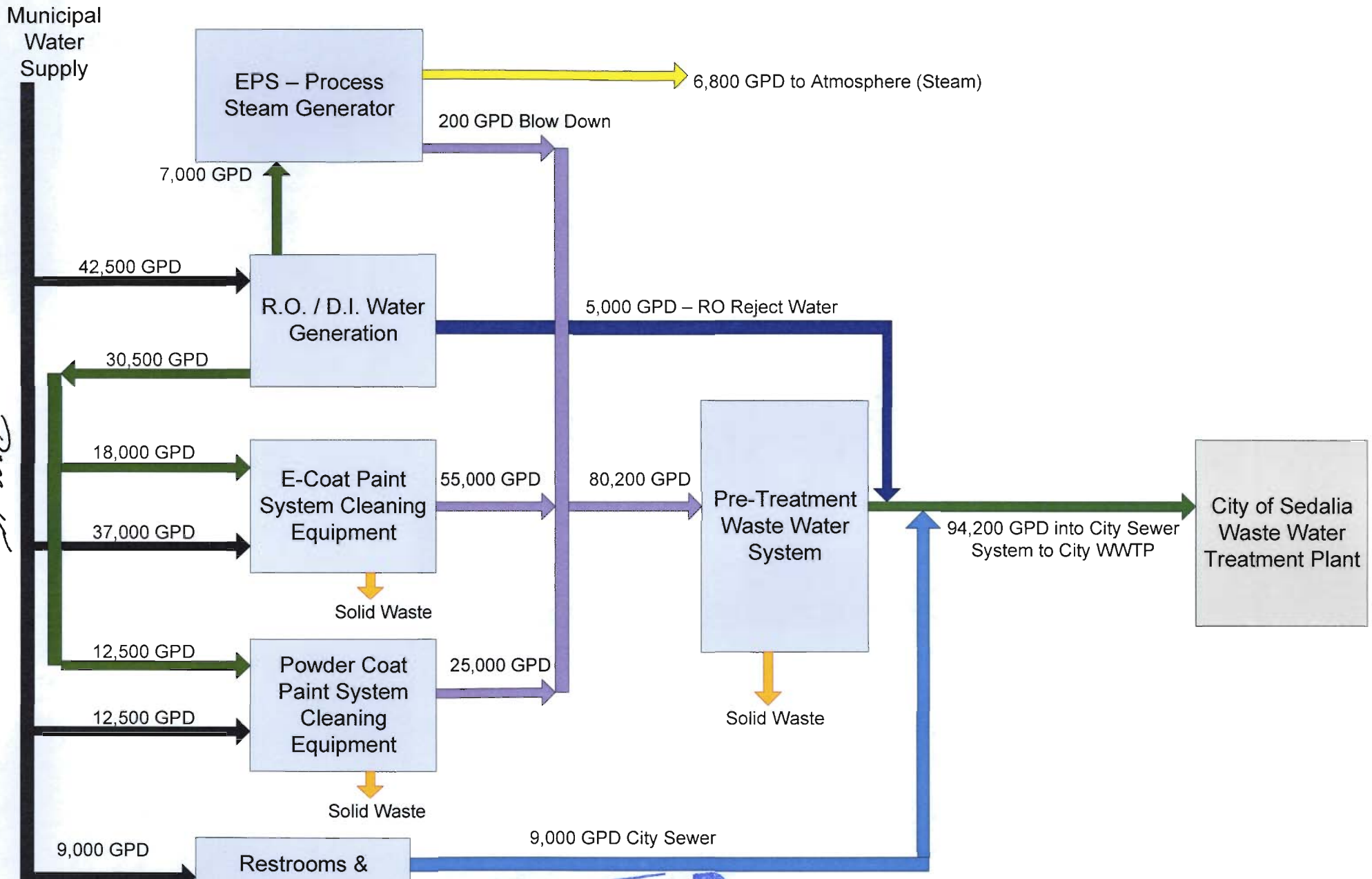

RECEIVED
DEC 19 2011
Kansas City Regional Office

Waterloo Industries, Inc.
Schematic of Water Flow – Plant Processes