STATE OF MISSOURI

DEPARTMENT OF NATURAL RESOURCES

MISSOURI CLEAN WATER COMMISSION

MISSOURI STATE OPERATING PERMIT

In compliance with the Missouri Clean Water Law, (Chapter 644 R.S. Mo. as amended, hereinafter, the Law), and the Federal Water Pollution Control Act (Public Law 92-500, 92nd Congress) as amended,

Permit No.	MO-0056260
Owner:	City of Ava
Address:	P.O. Box 967, Ava, MO 65608
Continuing Authority:	Same as above
Address:	Same as above
Facility Name:	Ava Wastewater Treatment Plant
Facility Address:	506 County Road, Ava, MO 65608
Legal Description:	See Page 2.
UTM Coordinates:	See Page 2.
Receiving Stream:	See Page 2.
First Classified Stream and ID:	See Page 2.
USGS Basin & Sub-watershed No.:	See Page 2.

is authorized to discharge from the facility described herein, in accordance with the effluent limitations and monitoring requirements as set forth herein:

FACILITY DESCRIPTION

Outfall #001 – POTW – SIC #4952

See Page 2.

This permit authorizes only wastewater discharges under the Missouri Clean Water Law and the National Pollutant Discharge Elimination System; it does not apply to other regulated areas. This permit may be appealed in accordance with Section 621.250 RSMo, Section 640.013 RSMo and Section 644.051.6 of the Law.

June 1, 2016
Effective Date

Sara Parker Pauley, Director, Department of Natural Resources

September 30, 2019
Expiration Date

John Madras, Director, Water Protection Program

FACILITY DESCRIPTION (continued):

Outfall #001 – POTW – SIC #4952
The use or operation of this facility shall be by or under the supervision of a Certified B Operator.
Stormwater lagoon / influent pump station / bar screen / influent selector basin / oxidation ditch / three (3) clarifiers / three (3) traveling bridge sand filters / ultraviolet disinfection / two (2) aerobic sludge digesters / sludge is land applied by applicant.
Design population equivalent is 4,733.
Design flow is 700,000 gallons per day.
Actual flow is 560,000 gallons per day.
Design sludge production is 213 dry tons/year.

Legal Description:	SW ¼, NE ¼, Sec. 15, T26N, R16W, Douglas County
UTM Coordinates:	X= 528787, Y= 4088761
Receiving Stream:	Tributary to Prairie Creek (C) (losing)
First Classified Stream and ID:	8-20-13 MUDD V1.0 (C) (3960) (losing)
USGS Basin & Sub-watershed No.:	(11010003-0201)

Outfall(s) #002 – Discharges from these outfalls are no longer authorized, and shall be subject to 40 CFR 122.41(m) and reported according to 40 CFR 122.41(m)(3)(i) & (ii).

Comments:
Outfall #002 is no longer authorized to discharge as it is a bypass. The Department has developed a Voluntary Compliance Agreement (VCA) for communities that believe they need time to eliminate this discharge. The VCA requires communities to develop and submit bypass elimination plans, to make progress, and to report on this progress. The terms of the VCA is for five (5) years, and is renewable for another five (5) years assuming that adequate progress is being made. In return, the State of Missouri will not initiate enforcement actions for the terms contained in the VCA. The permittee has entered into a VCA.

OUTFALL #001	TABLE A-1. FINAL EFFLUENT LIMITATIONS AND MONITORING REQUIREMENTS	PAGE NUMBER 3 of 8
		PERMIT NUMBER MO-0056260

The permittee is authorized to discharge from outfall(s) with serial number(s) as specified in the application for this permit. The final effluent limitations shall become effective on **June 1, 2016** and remain in effect until expiration of the permit. Such discharges shall be controlled, limited and monitored by the permittee as specified below:

EFFLUENT PARAMETER(S)	UNITS	FINAL EFFLUENT LIMITATIONS			MONITORING REQUIREMENTS	
		DAILY MAXIMUM	WEEKLY AVERAGE	MONTHLY AVERAGE	MEASUREMENT FREQUENCY	SAMPLE TYPE
Flow	MGD	*		*	once/weekday***	24 hr. total
Biochemical Oxygen Demand$_5$	mg/L		15	10	once/week	composite**
Total Suspended Solids	mg/L		20	15	once/week	composite**
Ammonia as N (Apr 1 – Sep 30) (Oct 1 – Mar 31)	mg/L	6.0 11.8		1.2 2.6	once/week	grab
E. coli (Note 1, Page 4)	#/100mL	126		*	once/week	grab
Nitrates as N	mg/L	*		*	once/week	grab
MONITORING REPORTS SHALL BE SUBMITTED MONTHLY; THE FIRST REPORT IS DUE JULY 28, 2016. THERE SHALL BE NO DISCHARGE OF FLOATING SOLIDS OR VISIBLE FOAM IN OTHER THAN TRACE AMOUNTS.						
Oil & Grease	mg/L	15		10	once/quarter *****	grab
Total Phosphorus	mg/L	*		*	once/quarter *****	grab
Total Nitrogen	mg/L	*		*	once/quarter *****	grab
MONITORING REPORTS SHALL BE SUBMITTED QUARTERLY; THE FIRST REPORT IS DUE OCTOBER 28, 2016.						
EFFLUENT PARAMETER(S)	UNITS	MINIMUM		MAXIMUM	MEASUREMENT FREQUENCY	SAMPLE TYPE
pH – Units ****	SU	6.5		9.0	once/week	grab
MONITORING REPORTS SHALL BE SUBMITTED MONTHLY; THE FIRST REPORT IS DUE JULY 28, 2016.						
EFFLUENT PARAMETER(S)	UNITS	DAILY MINIMUM		MONTHLY AVERAGE MINIMUM	MEASUREMENT FREQUENCY	SAMPLE TYPE
Dissolved Oxygen	mg/L	*		*	once/week	grab
MONITORING REPORTS SHALL BE SUBMITTED MONTHLY; THE FIRST REPORT IS DUE JULY 28, 2016.						

* Monitoring requirement only.
** A 24-hour composite sample is composed of 48 aliquots (subsamples) collected at 30 minute intervals by an automatic sampling device.
*** Once each weekday means: Monday, Tuesday, Wednesday, Thursday, and Friday.
**** pH is measured in pH units and is not to be averaged.
***** See table on Page 4 for quarterly sampling requirements.

Minimum Sampling Requirements			
Quarter	**Months**	**Oil & Grease, Total Phosphorus, and Total Nitrogen**	**Report is Due**
First	January, February, March	Sample at least once during any month of the quarter	April 28th
Second	April, May, June	Sample at least once during any month of the quarter	July 28th
Third	July, August, September	Sample at least once during any month of the quarter	October 28th
Fourth	October, November, December	Sample at least once during any month of the quarter	January 28th

Note 1 –Effluent limits of 126 #/100 mL daily maximum and monitoring only for monthly average for *E. coli* are applicable year round due to losing stream designation. No more than 10% of samples shall exceed 126 #/100 mL daily maximum.

OUTFALL #001	**TABLE A-2. WHOLE EFFLUENT TOXICITY FINAL EFFLUENT LIMITATIONS AND MONITORING REQUIREMENTS**					
The permittee is authorized to discharge from outfall(s) with serial number(s) as specified in the application for this permit. The final effluent limitations shall become effective on **June 1, 2016** and remain in effect until expiration of the permit. Such discharges shall be controlled, limited and monitored by the permittee as specified below:						
EFFLUENT PARAMETER(S)	UNITS	**FINAL EFFLUENT LIMITATIONS**			MONITORING REQUIREMENTS	
		DAILY MAXIMUM	WEEKLY AVERAGE	MONTHLY AVERAGE	MEASUREMENT FREQUENCY	SAMPLE TYPE
Acute Whole Effluent Toxicity (Note 2)	TU_a	*			once/permit cycle	composite**
MONITORING REPORTS SHALL BE SUBMITTED ONCE PER PERMIT CYCLE; THE FIRST REPORT IS DUE MARCH 28, 2019.						

* Monitoring requirement only.
** A 24-hour composite sample is composed of 48 aliquots (subsamples) collected at 30 minute intervals by an automatic sampling device.

Note 2 – The Acute WET test shall be conducted once during the permit cycle. See Special Condition #21 for additional requirements.

TABLE B. INFLUENT MONITORING REQUIREMENTS			
The facility is required to meet a removal efficiency of 85% or more as a monthly average. The monitoring requirements shall become effective on **June 1, 2016** and remain in effect until expiration of the permit. To determine removal efficiencies, the influent wastewater shall be monitored by the permittee as specified below:			
SAMPLING LOCATION AND PARAMETER(S)	UNITS	MONITORING REQUIREMENTS	
		MEASUREMENT FREQUENCY	SAMPLE TYPE
Biochemical Oxygen $Demand_5$	mg/L	once/month	composite**
Total Suspended Solids	mg/L	once/month	composite**
MONITORING REPORTS SHALL BE SUBMITTED MONTHLY; THE FIRST REPORT IS DUE JULY 28, 2016.			

* Monitoring requirement only.
** A 24-hour composite sample is composed of 48 aliquots (subsamples) collected at 30 minute intervals by an automatic sampling device.

C. STANDARD CONDITIONS

In addition to specified conditions stated herein, this permit is subject to the attached Parts I, II, & III standard conditions dated August 1, 2014, May 1, 2013, and March 1, 2015, and hereby incorporated as though fully set forth herein.

D. SPECIAL CONDITIONS

1. This permit establishes final ammonia limitations based on Missouri's current Water Quality Standard. On August 22, 2013, the U.S. Environmental Protection Agency (EPA) published a notice in the Federal Register announcing of the final national recommended ambient water quality criteria for protection of aquatic life from the effects of ammonia in freshwater. The EPA's guidance, Final Aquatic Life Ambient Water Quality Criteria for Ammonia – Fresh Water 2013, is not a rule, nor automatically part of a state's water quality standards. States must adopt new ammonia criteria consistent with EPA's published ammonia criteria into their water quality standards that protect the designated uses of the water bodies. The Department of Natural Resources has initiated stakeholder discussions on how to best incorporate these new criteria into the State's rules. A date for when this rule change will occur has not been determined. Also, refer to Section VI of this permit's factsheet for further information including estimated future effluent limits for this facility. It is recommended the permittee view the Department's 2013 EPA criteria Factsheet located at http://dnr.mo.gov/pubs/pub2481.htm.

2. This permit may be reopened and modified, or alternatively revoked and reissued, to:
   (a) Comply with any applicable effluent standard or limitation issued or approved under Sections 301(b)(2)(C) and (D), 304(b)(2), and 307(a) (2) of the Clean Water Act, if the effluent standard or limitation so issued or approved:
      (1) contains different conditions or is otherwise more stringent than any effluent limitation in the permit; or
      (2) controls any pollutant not limited in the permit.
   (b) Incorporate new or modified effluent limitations or other conditions, if the result of a waste load allocation study, toxicity test or other information indicates changes are necessary to assure compliance with Missouri's Water Quality Standards.
   (c) Incorporate new or modified effluent limitations or other conditions if, as the result of a watershed analysis, a Total Maximum Daily Load (TMDL) limitation is developed for the receiving waters which are currently included in Missouri's list of waters of the state not fully achieving the state's water quality standards, also called the 303(d) list.
   (d) Incorporate the requirement to develop a pretreatment program pursuant to 40 CFR 403.8(a) when the Director of the Water Protection Program determines that a pretreatment program is necessary due to any new introduction of pollutants into the Publically Owned Treatment Works or any substantial change in the volume or character of pollutants being introduced.

   The permit as modified or reissued under this paragraph shall also contain any other requirements of the Clean Water Act then applicable.

3. All outfalls must be clearly marked in the field.

4. Permittee will cease discharge by connection to a facility with an area-wide management plan per 10 CSR 20-6.010(3)(B) within 90 days of notice of its availability.

5. Report as no-discharge when a discharge does not occur during the report period.

6. Water Quality Standards
   (a) To the extent required by law, discharges to waters of the state shall not cause a violation of water quality standards rule under 10 CSR 20-7.031, including both specific and general criteria.
   (b) General Criteria. The following general water quality criteria shall be applicable to all waters of the state at all times including mixing zones. No water contaminant, by itself or in combination with other substances, shall prevent the waters of the state from meeting the following conditions:
      (1) Waters shall be free from substances in sufficient amounts to cause the formation of putrescent, unsightly or harmful bottom deposits or prevent full maintenance of beneficial uses;
      (2) Waters shall be free from oil, scum and floating debris in sufficient amounts to be unsightly or prevent full maintenance of beneficial uses;
      (3) Waters shall be free from substances in sufficient amounts to cause unsightly color or turbidity, offensive odor or prevent full maintenance of beneficial uses;
      (4) Waters shall be free from substances or conditions in sufficient amounts to result in toxicity to human, animal or aquatic life;
      (5) There shall be no significant human health hazard from incidental contact with the water;
      (6) There shall be no acute toxicity to livestock or wildlife watering;

D. SPECIAL CONDITIONS (continued)

(7) Waters shall be free from physical, chemical or hydrologic changes that would impair the natural biological community;
(8) Waters shall be free from used tires, car bodies, appliances, demolition debris, used vehicles or equipment and solid waste as defined in Missouri's Solid Waste Law, section 260.200, RSMo, except as the use of such materials is specifically permitted pursuant to section 260.200-260.247.

7. Changes in existing pollutants or the addition of new pollutants to the treatment facility

The permittee must provide adequate notice to the Director of the following:
(a) Any new introduction of pollutants into the POTW from an indirect discharger which would be subject to section 301 or 306 of CWA if it were directly discharging those pollutants; and
(b) Any substantial change in the volume or character of pollutants being introduced into that POTW by a source introducing pollutants into the POTW at the time of issuance of the permit.
(c) For purposes of this paragraph, adequate notice shall include information on;
(1) the quality and quantity of effluent introduced into the POTW, and
(2) any anticipated impact of the change on the quantity or quality of effluent to be discharged from the POTW.

8. Reporting of Non-Detects:
(a) An analysis conducted by the permittee or their contracted laboratory shall be conducted in such a way that the precision and accuracy of the analyzed result can be enumerated.
(b) The permittee shall not report a sample result as “Non-Detect” without also reporting the detection limit of the test. Reporting as “Non Detect” without also including the detection limit will be considered failure to report, which is a violation of this permit.
(c) The permittee shall provide the “Non-Detect” sample result using the less than sign and the minimum detection limit (e.g. <10).
(d) The permittee shall use one-half of the detection limit for the non-detect result when calculating monthly averages.
(e) See Standard Conditions Part I, Section A, #4 regarding proper detection limits used for sample analysis.

9. It is a violation of the Missouri Clean Water Law to fail to pay fees associated with this permit (644.055 RSMo).

10. The permittee shall comply with any applicable requirements listed in 10 CSR 20-9, unless the facility has received written notification that the Department has approved a modification to the requirements. The monitoring frequencies contained in this permit shall not be construed by the permittee as a modification of the monitoring frequencies listed in 10 CSR 20-9. If a modification of the monitoring frequencies listed in 10 CSR 20-9 is needed, the permittee shall submit a written request to the Department for review and, if deemed necessary, approval.

11. The permittee shall develop and implement a program for maintenance and repair of the collection system. The recommended guidance is the US EPA’s Guide For Evaluating Capacity, Management, Operation, And Maintenance (CMOM) Programs At Sanitary Sewer Collection Systems (Document number EPA 305-B-05-002) or the Departments’ CMOM Model located at http://dnr.mo.gov/env/wpp/permits/docs/cmom-template.doc. For additional information regarding the Departments’ CMOM Model, see the CMOM Plan Model Guidance document at http://dnr.mo.gov/pubs/pub2574.htm.

The permittee shall also submit a report to the Southwest Regional Office annually, by January 28th, for the previous calendar year. The report shall contain the following information:
(a) A summary of the efforts to locate and eliminate sources of excessive infiltration and inflow into the collection system serving the facility for the previous year.
(b) A summary of the general maintenance and repairs to the collection system serving the facility for the previous year.
(c) A summary of any planned maintenance and repairs to the collection system serving the facility for the upcoming calendar year. This list shall include locations (GPS, 911 address, manhole number, etc.) and actions to be taken.

D. SPECIAL CONDITIONS (continued)

12. Bypasses are not authorized at this facility unless they meet the criteria in 40 CFR 122.41(m). If a bypass occurs, the permittee shall report in accordance to 40 CFR 122.41(m)(3), and with Standard Condition Part I, Section B, subsection 2.b. Bypasses are to be reported to the Southwest Regional Office or by using the online Sanitary Sewer Overflow/Facility Bypass Application, located at: http://dnr.mo.gov/modnrcag/ during normal business hours or the Environmental Emergency Response hotline at 573-634-2436 outside of normal business hours. Blending, which is the practice of combining a partially-treated wastewater process stream with a fully-treated wastewater process stream prior to discharge, is not considered a form of bypass. If the permittee wishes to utilize blending, the permittee shall file an application to modify this permit to facilitate the inclusion of appropriate monitoring conditions.

13. The facility must be sufficiently secured to restrict entry by children, livestock and unauthorized persons as well as to protect the facility from vandalism.

14. At least one gate must be provided to access the wastewater treatment facility and provide for maintenance and mowing. The gate shall remain closed except when temporarily opened by; the permittee to access the facility, perform operational monitoring, sampling, maintenance, mowing, or for inspections by the Department. The gate shall be closed and locked when the facility is not staffed.

15. At least one (1) warning sign shall be placed on each side of the facility enclosure in such positions as to be clearly visible from all directions of approach. There shall also be one (1) sign placed for every five hundred feet (500') (150 m) of the perimeter fence. A sign shall also be placed on each gate. Minimum wording shall be SEWAGE TREATMENT FACILITY—KEEP OUT. Signs shall be made of durable materials with characters at least two inches (2") high and shall be securely fastened to the fence, equipment or other suitable locations.

16. An Operation and Maintenance (O & M) manual shall be maintained by the permittee and made available to the operator. The O & M manual shall include key operating procedures and a brief summary of the operation of the facility.

17. An all-weather access road shall be provided to the treatment facility.

18. The discharge from the wastewater treatment facility shall be conveyed to the receiving stream via a closed pipe or a paved or rip-rapped open channel. Sheet or meandering drainage is not acceptable. The outfall sewer shall be protected against the effects of floodwater, ice or other hazards as to reasonably insure its structural stability and freedom from stoppage. The outfall shall be maintained so that a sample of the effluent can be obtained at a point after the final treatment process and before the discharge mixes with the receiving waters.

19. Land application of biosolids shall be conducted in accordance with Standard Conditions III and a Department approved biosolids management plan. Land application of biosolids during frozen, snow covered, or saturated soil conditions in accordance with the additional requirements specified in WQ426 shall occur only with prior approval from the Department.

20. Discharge Monitoring Reports
    (a) All reports and results required to be submitted by the permit, excluding 24-hr. bypass reporting, must be submitted to the Department via the electronic Discharge Monitoring Report Submission System (eDMR). In regards to Standard Conditions Part I, Section B, #7, the eDMR data reporting system is the only Department approved reporting method for this permit.
    (b) To access the eDMR data reporting system, use the following link in your web browser: https://edmr.dnr.mo.gov/edmr/E2/Shared/Pages/Main/Login.aspx.

D. SPECIAL CONDITIONS (continued)

21. Acute Whole Effluent Toxicity (WET) tests shall be conducted as follows:

SUMMARY OF ACUTE WET TESTING FOR THIS PERMIT					
OUTFALL	AEC	Acute Toxic Unit (TU_a)	FREQUENCY	SAMPLE TYPE	MONTH
001	100%	*	once/permit cycle	composite**	Any

* Monitoring requirement only.
** A 24-hour composite sample is composed of 48 aliquots (subsamples) collected at 30 minute intervals by an automatic sampling device.

DILUTION SERIES						
100%	50%	25%	12.5%	6.25%	(Control) 100% upstream, if available	(Control) 100% Lab Water, also called synthetic water

(a) Freshwater Species and Test Methods
(1) Species and short-term test methods for estimating the acute toxicity of NPDES effluents are found in the most recent edition of *Methods for Measuring the Acute Toxicity of Effluents and Receiving Waters to Freshwater and Marine Organisms* (EPA/821/R-02/012; Table IA, 40 CFR Part 136). The permittee shall concurrently conduct 48-hour static non-renewal toxicity tests with the following vertebrate species:
- The fathead minnow, *Pimephales promelas* (Acute Toxicity Test Method 2000.0).

And the following invertebrate species:
- The daphnid, *Ceriodaphnia dubia* (Acute Toxicity Test Method 2002.0).

(2) Chemical and physical analysis of an upstream control sample and effluent sample shall occur immediately upon being received by the laboratory, prior to any manipulation of the effluent sample beyond preservation methods consistent with federal guidelines for WET testing that are required to stabilize the sample during shipping. Where upstream receiving water is not available, synthetic laboratory control water may be used.
(3) Test conditions must meet all test acceptability criteria required by the EPA Method used in the analysis.
(4) Any and all chemical or physical analysis of the effluent sample performed in conjunction with the WET test shall be performed at the 100% Effluent concentration in addition to analysis performed upon any other effluent concentration.
(5) All chemical analyses shall be performed and results shall be recorded in the appropriate field of the report form. The parameters for chemical analysis include Temperature (°C), pH (SU), Conductivity (µmohs/cm), Dissolved Oxygen (mg/L), Total Residual Chlorine (mg/L), Un-ionized Ammonia (mg/L), Total Alkalinity (mg/L), and Total Hardness (mg/L).

(b) Reporting of Acute Toxicity Monitoring Results
(1) WET test results shall be submitted to the Southwest Regional Office, or by eDMR, with the permittee's Discharge Monitoring Reports once during the permit cycle by **March, 28, 2019**. The submittal shall include:
i. A full laboratory report for all toxicity testing.
ii. Copies of chain-of-custody forms.
iii. The WET form provided by the Department upon permit issuance.
(2) The report must include a quantification of acute toxic units ($TU_a = 100/LC_{50}$) reported according to the test methods manual chapter on report preparation and test review. The Lethal Concentration, 50 Percent (LC_{50}) is the toxic or effluent concentration that would cause death in 50 percent of the test organisms over a specified period of time.

(c) Permit Reopener for Acute Toxicity
In accordance with 40 CFR Parts 122 and 124, this permit may be modified to include effluent limitations or permit conditions to address acute toxicity in the effluent or receiving waterbody, as a result of the discharge; or to implement new, revised, or newly interpreted water quality standards applicable to acute toxicity.

MISSOURI DEPARTMENT OF NATURAL RESOURCES
FACT SHEET
FOR THE PURPOSE OF RENEWAL
OF
MO-0056260
AVA WASTEWATER TREATMENT PLANT

The Federal Water Pollution Control Act ("Clean Water Act" Section 402 Public Law 92-500 as amended) established the National Pollution Discharge Elimination System (NPDES) permit program. This program regulates the discharge of pollutants from point sources into the waters of the United States, and the release of stormwater from certain point sources. All such discharges are unlawful without a permit (Section 301 of the "Clean Water Act"). After a permit is obtained, a discharge not in compliance with all permit terms and conditions is unlawful. Missouri State Operating Permits (MSOPs) are issued by the Director of the Missouri Department of Natural Resources (Department) under an approved program, operating in accordance with federal and state laws (Federal "Clean Water Act" and "Missouri Clean Water Law" Section 644 as amended). MSOPs are issued for a period of five (5) years unless otherwise specified.

As per [40 CFR Part 124.8(a)] and [10 CSR 20-6.020(1)2.] a Factsheet shall be prepared to give pertinent information regarding the applicable regulations, rationale for the development of effluent limitations and conditions, and the public participation process for the Missouri State Operating Permit (operating permit) listed below.

A Factsheet is not an enforceable part of an operating permit.

This Factsheet is for a Minor.

Part I – Facility Information

Facility Type: POTW - SIC #4952

Facility Description:
Stormwater lagoon / influent pump station / bar screen / influent selector basin / oxidation ditch / three (3) clarifiers / three (3) traveling bridge sand filters / ultraviolet disinfection / two (2) aerobic sludge digesters / sludge is land applied by applicant.
Design population equivalent is 4,733.
Design flow is 700,000 gallons per day.
Actual flow is 560,000 gallons per day.
Design sludge production is 213 dry tons/year.

Have any changes occurred at this facility or in the receiving water body that effects effluent limit derivation?
☒ - No.

Application Date: 02/19/15
Expiration Date: 09/19/15

OUTFALL(S) TABLE:

OUTFALL	DESIGN FLOW (CFS)	TREATMENT LEVEL	EFFLUENT TYPE
#001	1.085	Tertiary	Domestic

Facility Performance History:
This facility was last inspected on November 20, 2014. The inspection showed the unsatisfactory features. Observations of non-compliance made during the inspection included laboratory issues and failure to do the Plant Available Nitrogen calculations for biosolids disposal in 2013.

Comments:
Changes in this permit include the addition of monitoring requirements for total phosphorus and total nitrogen and the removal of monitoring requirements for temperature. See Part VII of the Fact Sheet for further information regarding the addition and removal of effluent parameters. Special conditions were updated to include the addition of reporting of Non-detects, bypass reporting requirements, and electronic Discharge Monitoring Report Submission System (eDMR) use requirements.

Outfall #002 is no longer authorized to discharge as it is a Bypass. The Department has developed a Voluntary Compliance Agreement (VCA) for communities that believe they need time to eliminate this discharge. The VCA requires communities to develop and submit bypass elimination plans, to make progress, and to report on this progress. The terms of the VCA is for five (5) years, and is renewable for another five (5) years assuming that adequate progress is being made. In return, the State of Missouri will not initiate enforcement actions for the terms contained in the VCA. The permittee has entered into a VCA. The VCA addresses discharge of wastewater from this facility which bypasses full treatment. The Department of Natural Resources, Water Protection Program, finalized the VCA for the City of Ava on September 15, 2010. The City of Ava expressed interest in extending the VCA in a letter to dated September 29, 2015. It appears adequate progress is being made in accordance with the VCA, paragraph 17. The VCA has been extended until September 15, 2020.

This permit changes WET test requirements for the facility from a pass/fail requirement to monitoring only for toxic units. This change reflects modifications to Missouri's Effluent Regulation found at 10 CSR 20-7.015. 40 CFR 122.44(d)(1)(ii) requires the Department to establish effluent limitations that control all parameters which have the reasonable potential to cause or contribute to an excursion above any state water quality standard, including state narrative criteria. The previous permit imposed a pass/fail limitation without collecting sufficient data to make a reasonable potential determination. Furthermore, the method of reporting associated with the pass/fail limitation prevented the Department from gathering the data necessary to make a finding of reasonable potential. Implementation of the toxic unit monitoring requirement will allow the Department to implement numeric acute criteria in accordance with water quality standards established under §303 of the CWA.

Part II – Operator Certification Requirements

☒ - This facility is required to have a certified operator.

As per [10 CSR 20-6.010(8) Terms and Conditions of a Permit], the permittee shall operate and maintain facilities to comply with the Missouri Clean Water Law and applicable permit conditions and regulations. Operators or supervisors of operations at regulated wastewater treatment facilities shall be certified in accordance with [10 CSR 20-9.020(2)] and any other applicable state law or regulation. As per [10 CSR 20-9.020(2)(A)], requirements for operation by certified personnel shall apply to all wastewater treatment systems, if applicable, as listed below:

Owned or operated by or for a

- ☒ - Municipalities
- ☐ - State agency
- ☐ - Federal agency
- ☐ - Public Sewer District
- ☐ - County
- ☐ - Public Water Supply Districts
- ☐ - Private Sewer Company regulated by the Public Service Commission
- ☐ - State agency
- ☐ - Federal agency

Each of the above entities are only applicable if they have a Population Equivalent greater than two hundred (200) or fifty (50) or more service connections.

This facility currently requires an operator with a B Certification Level. Please see **Appendix - Classification Worksheet.** Modifications made to the wastewater treatment facility may cause the classification to be modified.

Operator's Name: Steve M. Davis
Certification Number: 5295
Certification Level: A

The listing of the operator above only signifies that staff drafting this operating permit have reviewed appropriate Department records and determined that the name listed on the operating permit application has the correct and applicable Certification Level.

Part III– Operational Monitoring

☒ - As per [10 CSR 20-9.010(4))], the facility is required to conduct operational monitoring.

Part IV – Receiving Stream Information

10 CSR 20-7.031 Missouri Water Quality Standards, the Department defines the Clean Water Commission water quality objectives in terms of "water uses to be maintained and the criteria to protect those uses." The receiving stream and/or 1st classified receiving stream's beneficial water uses to be maintained are located in the Receiving Stream Table located below in accordance with [10 CSR 20-7.031(4)].

RECEIVING STREAM(S) TABLE: OUTFALL #001

WATER-BODY NAME	CLASS	WBID	DESIGNATED USES*	12-DIGIT HUC	DISTANCE TO CLASSIFIED SEGMENT (MI)
8-20-13 MUDD V1.0	C	3960	AQL, HHP, IRR, LWW, SCR, WBC-B	11010003-0201	To Losing and First Classified: Directly Discharge
Cowskin Creek	P	2482	AQL, HHP, IRR, LWW, SCR, WBC-B		4.0

* - Irrigation (IRR), Livestock & Wildlife Watering (LWW), Protection of Warm Water Aquatic Life (AQL), Human Health Protection (HHP), Cool Water Fishery (CLF), Cold Water Fishery (CDF), Whole Body Contact Recreation – Category A (WBC-A), Whole Body Contact Recreation – Category B (WBC-B), Secondary Contact Recreation (SCR), Drinking Water Supply (DWS), Industrial (IND), Groundwater (GRW).

RECEIVING STREAM(S) LOW-FLOW VALUES:

RECEIVING STREAM (C, E, P, P1)	LOW-FLOW VALUES (CFS)		
	1Q10	7Q10	30Q10
8-20-13 MUDD V1.0 (C)	0.0	0.0	0.0

MIXING CONSIDERATIONS TABLE:

MIXING ZONE (CFS) [10 CSR 20-7.031(5)(A)4.B.(I)(a)]			ZONE OF INITIAL DILUTION (CFS) [10 CSR 20-7.031(5)(A)4.B(I)(b)]		
1Q10	7Q10	30Q10	1Q10	7Q10	30Q10
0.0	0.0	0.0	0.0	0.0	N/A

RECEIVING STREAM MONITORING REQUIREMENTS:
No receiving water monitoring requirements recommended at this time.

Receiving Water Body's Water Quality
A stream survey was conducted on September 4, 2014. No impacts were observed during the survey.

Part V – Rationale and Derivation of Effluent Limitations & Permit Conditions

ALTERNATIVE EVALUATIONS FOR NEW FACILITIES:
As per [10 CSR 20-7.015(4)(A)], discharges to losing streams shall be permitted only after other alternatives including land application, discharges to a gaining stream and connection to a regional wastewater treatment facility have been evaluated and determined to be unacceptable for environmental and/or economic reasons.

☒ - The facility does not discharge to a Losing Stream as defined by [10 CSR 20-2.010(36)] & [10 CSR 20-7.031(1)(N)], or is an existing facility.

ANTI-BACKSLIDING:
A provision in the Federal Regulations [CWA §303(d)(4); CWA §402(o); 40 CFR Part 122.44(l)] that requires a reissued permit to be as stringent as the previous permit with some exceptions.

☒ - Limitations in this operating permit for the reissuance of this permit conform to the anti-backsliding provisions of Section 402(o) of the Clean Water Act, and 40 CFR Part 122.44.

☒ - Information is available which was not available at the time of permit issuance (other than revised regulations, guidance, or test methods) and which would have justified the application of a less stringent effluent limitation at the time of permit issuance.

- **Temperature**. The Department has concluded that domestic wastewater treatment facilities have no reasonable potential to exceed Water Quality Standards for temperature. Due to the fact that this facility will have a minimal effect on temperature this parameter has been removed from the permit.
- **Ammonia as N**. The current ammonia criteria utilizes two seasons within the year which separates the summer months from the winter months. As a result of the reasonable potential analysis, certain months of the year have less stringent final effluent limitations for ammonia. All final effluent limitations are protective of water quality standards. These limitations will be reevaluated during the next permit renewal.
- ***E. coli***. The previous permit included final effluent limitations for Fecal Coliform of 1,000 per 100mL as a daily maximum and 400 per 100mL as a monthly average. This facility discharges to a losing stream. Discharges to losing streams shall not exceed 126 per 100 mL as a daily maximum at any time, as per 10 CSR 20-7.031(5)(C). Monitoring only for a monthly average. No more than 10% of samples shall exceed 126 #/100 mL daily maximum as per 10 CSR 20-7.015(9)(B)1.G.

☒ - The Department determines that technical mistakes or mistaken interpretations of law were made in issuing the permit under section 402(a)(1)(b).

- **Acute Whole Effluent Toxicity (WET) test**. This permit changes WET test requirements for the facility from a pass/fail requirement to monitoring only for toxic units. This change reflects modifications to Missouri's Effluent Regulation found at 10 CSR 20-7.015. 40 CFR 122.44(d)(1)(ii) requires the Department to establish effluent limitations that control all parameters which have the reasonable potential to cause or contribute to an excursion above any state water quality standard, including state narrative criteria. The previous permit imposed a pass/fail limitation without collecting sufficient data to make a reasonable potential determination. Furthermore, the method of reporting associated with the pass/fail limitation prevented the Department from gathering the data necessary to make a finding of reasonable potential. Implementation of the toxic unit monitoring requirement will allow the Department to implement numeric acute criteria in accordance with water quality standards established under §303 of the CWA.

ANTIDEGRADATION:
In accordance with Missouri's Water Quality Standard [10 CSR 20-7.031(3)], the Department is to document by means of Antidegradation Review that the use of a water body's available assimilative capacity is justified. Degradation is justified by documenting the socio-economic importance of a discharging activity after determining the necessity of the discharge.

☒ - No degradation proposed and no further review necessary. Facility did not apply for authorization to increase pollutant loading or to add additional pollutants to their discharge.

AREA-WIDE WASTE TREATMENT MANAGEMENT & CONTINUING AUTHORITY:
As per [10 CSR 20-6.010(3)(B)], …An applicant may utilize a lower preference continuing authority by submitting, as part of the application, a statement waiving preferential status from each existing higher preference authority, providing the waiver does not conflict with any area-wide management plan approved under section 208 of the Federal Clean Water Act or any other regional sewage service and treatment plan approved for higher preference authority by the Department.

BIOSOLIDS & SEWAGE SLUDGE:
Biosolids are solid materials resulting from domestic wastewater treatment that meet federal and state criteria for beneficial uses (i.e. fertilizer). Sewage sludge is solids, semi-solids, or liquid residue generated during the treatment of domestic sewage in a treatment works; including but not limited to, domestic septage; scum or solids removed in primary, secondary, or advanced wastewater treatment process; and a material derived from sewage sludge. Sewage sludge does not include ash generated during the firing of sewage sludge in a sewage sludge incinerator or grit and screening generated during preliminary treatment of domestic sewage in a treatment works. Additional information regarding biosolids and sludge is located at the following web address: http://extension.missouri.edu/main/DisplayCategory.aspx?C=74, items WQ422 through WQ449.

☒ - Permittee land applies biosolids in accordance with Standard Conditions III and a Department approved biosolids management plan.

COMPLIANCE AND ENFORCEMENT:
Enforcement is the action taken by the Water Protection Program (WPP) to bring an entity into compliance with the Missouri Clean Water Law, its implementing regulations, and/or any terms and conditions of an operating permit. The primary purpose of the enforcement activity in the WPP is to resolve violations and return the entity to compliance.

☒ - The facility is not currently under Water Protection Program enforcement action.

DISCHARGE MONITORING REPORTS:
On July 30, 2013, EPA proposed the Clean Water Act National Pollutant Discharge Elimination System (NPDES) Electronic Reporting Rule, which requires electronic reporting of NPDES information rather than the currently-required paper-based reports from permitted facilities. To comply with the upcoming federal rule, the Department is asking all permittees to begin submitting discharge monitoring data online. For permittees already using the Department's eDMR data reporting system, those permittees will be required to exclusively use the eDMR data reporting system.

☒ - The permittee/facility is currently using the eDMR data reporting system.

PRETREATMENT PROGRAM:
The reduction of the amount of pollutants, the elimination of pollutants, or the alteration of the nature of pollutant properties in wastewater prior to or in lieu of discharging or otherwise introducing such pollutants into a Publicly Owned Treatment Works [40 CFR Part 403.3(q)].

Pretreatment programs are required at any POTW (or combination of POTW operated by the same authority) and/or municipality with a total design flow greater than 5.0 MGD and receiving industrial wastes that interfere with or pass through the treatment works or are otherwise subject to the pretreatment standards. Pretreatment programs can also be required at POTWs/municipals with a design flow less than 5.0 MGD if needed to prevent interference with operations or pass through.

Several special conditions pertaining to the permittee's pretreatment program may be included in the permit, and are as follows:
- Implementation and enforcement of the program,
- Annual pretreatment report submittal,
- Submittal of list of industrial users,
- Technical evaluation of need to establish local limitations, and
- Submittal of the results of the evaluation

☒ - The permittee, at this time, is not required to have a Pretreatment Program or does not have an approved pretreatment program.

REASONABLE POTENTIAL ANALYSIS (RPA):
Federal regulation [40 CFR Part 122.44(d)(1)(i)] requires effluent limitations for all pollutants that are or may be discharged at a level that will cause or have the reasonable potential to cause or contribute to an in-stream excursion above narrative or numeric water quality standard.

In accordance with [40 CFR Part 122.44(d)(1)(iii)] if the permit writer determines that any given pollutant has the reasonable potential to cause, or contribute to an in-stream excursion above the WQS, the permit must contain effluent limits for that pollutant.

☒ - A RPA was conducted on appropriate parameters. Please see **APPENDIX – RPA RESULTS.**

REMOVAL EFFICIENCY:
Removal efficiency is a method by which the Federal Regulations define Secondary Treatment and Equivalent to Secondary Treatment, which applies to Biochemical Oxygen Demand 5-day (BOD_5) and Total Suspended Solids (TSS) for Publicly Owned Treatment Works (POTWs)/municipals.

☒ - Secondary Treatment is 85% removal [40 CFR Part 133.102(a)(3) & (b)(3)].

SANITARY SEWER OVERFLOWS (SSO) AND INFLOW AND INFILTRATION (I&I):
Sanitary Sewer Overflows (SSOs) are defined as untreated sewage releases and are considered bypassing under state regulation [10 CSR 20-2.010(11)] and should not be confused with the federal definition of bypass. SSOs result from a variety of causes including blockages, line breaks, and sewer defects that can either allow wastewater to backup within the collection system during dry weather conditions or allow excess stormwater and groundwater to enter and overload the collection system during wet weather conditions. SSOs can also result from lapses in sewer system operation and maintenance, inadequate sewer design and construction, power failures, and vandalism. SSOs include overflows out of manholes, cleanouts, broken pipes, and other into waters of the state and onto city streets, sidewalks, and other terrestrial locations.

Inflow and Infiltration (I&I) is defined as unwanted intrusion of stormwater or groundwater into a collection system. This can occur from points of direct connection such as sump pumps, roof drain downspouts, foundation drains, and storm drain cross-connections or through cracks, holes, joint failures, faulty line connections, damaged manholes, and other openings in the collection system itself. I&I results from a variety of causes including line breaks, improperly sealed connections, cracks caused by soil erosion/settling, penetration of vegetative roots, and other sewer defects. In addition, excess stormwater and groundwater entering the collection system from line breaks and sewer defects have the potential to negatively impact the treatment facility.

Missouri RSMo §644.026.1.(13) mandates that the Department issue permits for discharges of water contaminants into the waters of this state, and also for the operation of sewer systems. Such permit conditions shall ensure compliance with all requirements as established by sections 644.006 to 644.141. Standard Conditions Part I, referenced in the permit, contains provisions requiring proper operation and maintenance of all facilities and systems of treatment and control. Missouri RSMo §644.026.1.(15) instructs the Department to require proper maintenance and operation of treatment facilities and sewer systems and proper disposal of residual waste from all such facilities. To ensure that public health and the environment are protected, any noncompliance which may endanger public health or the environment must be reported to the Department within 24 hours of the time the permittee becomes aware of the noncompliance. Standard Conditions Part I, referenced in the permit, contains the reporting requirements for the permittee when bypasses and upsets occur. The permit also contains requirements for permittees to develop and implement a program for maintenance and repair of the collection system. The permit requires that the permittee submit an annual report to the Department for the previous calendar year that contains a summary of efforts taken by the permittee to locate and eliminate sources of excess I & I, a summary of general maintenance and repairs to the collection system, and a summary of any planned maintenance and repairs to the collection system for the upcoming calendar year.

☒ - At this time, the Department recommends the US EPA's Guide for Evaluating Capacity, Management, Operation and Maintenance (CMOM) Programs At Sanitary Sewer Collection Systems (Document # EPA 305-B-05-002) or the Departments' CMOM Model located at http://dnr.mo.gov/env/wpp/permits/docs/cmom-template.doc. For additional information regarding the Departments' CMOM Model, see the CMOM Plan Model Guidance document at http://dnr.mo.gov/pubs/pub2574.htm. The CMOM identifies some of the criteria used to evaluate a collection system's management, operation, and maintenance and was intended for use by the EPA, state, regulated community, and/or third party entities. The CMOM is applicable to small, medium, and large systems; both public and privately owned; and both regional and satellite collection systems. The CMOM does not substitute for the Clean Water Act, the Missouri Clean Water Law, and both federal and state regulations, as it is not a regulation.

SCHEDULE OF COMPLIANCE (SOC):

Per 644.051.4 RSMo, a permit may be issued with a Schedule of Compliance (SOC) to provide time for a facility to come into compliance with new state or federal effluent regulations, water quality standards, or other requirements. Such a schedule is not allowed if the facility is already in compliance with the new requirement, or if prohibited by other statute or regulation. A SOC includes an enforceable sequence of interim requirements (actions, operations, or milestone events) leading to compliance with the Missouri Clean Water Law, its implementing regulations, and/or the terms and conditions of an operating permit. *See also* Section 502(17) of the Clean Water Act, and 40 CFR §122.2. For new effluent limitations, the permit includes interim monitoring for the specific parameter to demonstrate the facility is not already in compliance with the new requirement. Per 40 CFR § 122.47(a)(1) and 10 CSR 20-7.031(11), compliance must occur as soon as possible. If the permit provides a schedule for meeting new water quality based effluent limits, a SOC must include an enforceable, final effluent limitation in the permit even if the SOC extends beyond the life of the permit.

A SOC is not allowed:

- For effluent limitations based on technology-based standards established in accordance with federal requirements, if the deadline for compliance established in federal regulations has passed. 40 CFR § 125.3.
- For a newly constructed facility in most cases. Newly constructed facilities must meet applicable effluent limitations when discharge begins, because the facility has installed the appropriate control technology as specified in a permit or antidegradation review. A SOC is allowed for a new water quality based effluent limit that was not included in a previously public noticed permit or antidegradation review, which may occur if a regulation changes during construction.
- To develop a TMDL, UAA, or other study associated with development of a site specific criterion. A facility is not prohibited from conducting these activities, but a SOC may not be granted for conducting these activities.

In order to provide guidance to Permit Writers in developing SOCs, and attain a greater level of consistency, on April 9, 2015 the Department issued an updated policy on development of SOCs. This policy provides guidance to Permit Writers on the standard time frames for schedules for common activities, and guidance on factors that may modify the length of the schedule such as a Cost Analysis for Compliance.

☒ - This permit does not contain a SOC.

STORMWATER POLLUTION PREVENTION PLAN (SWPPP):
In accordance with 40 CFR 122.44(k) *Best Management Practices (BMPs)* to control or abate the discharge of pollutants when: (1) Authorized under section 304(e) of the Clean Water Act (CWA) for the control of toxic pollutants and hazardous substances from ancillary industrial activities: (2) Authorized under section 402(p) of the CWA for the control of stormwater discharges; (3) Numeric effluent limitations are infeasible; or (4) the practices are reasonably necessary to achieve effluent limitations and standards or to carry out the purposes and intent of the CWA.

In accordance with the EPA's *Developing Your Stormwater Pollution Prevention Plan, A Guide for Industrial Operators*, (Document number EPA 833-B-09-002) [published by the United States Environmental Protection Agency (USEPA) in February 2009], BMPs are measures or practices used to reduce the amount of pollution entering (regarding this operating permit) waters of the state. BMPs may take the form of a process, activity, or physical structure.

Additionally in accordance with the Stormwater Management, a SWPPP is a series of steps and activities to (1) identify sources of pollution or contamination, and (2) select and carry out actions which prevent or control the pollution of stormwater discharges.

In lieu of requiring sampling in the site-specific permit, the facility is required to develop and implement a Stormwater Pollution Prevention Plan. A facility can apply for conditional exclusion for "no exposure" of industrial activities and materials to stormwater by submitting to the Department a completed NPDES Form 3510-11 – No Exposure Certification for Exclusion from NPDES Stormwater Permitting. That document and additional information may be found at http://water.epa.gov/polwaste/npdes/stormwater/Conditional-No-Exposure-Exclusion.cfm. Upon approval on the "No Exposure", the permit can be modified to remove the SWPPP requirements. If the facility chooses to retain the conditional exclusion for "no exposure", the facility is required to renew the "No Exposure" exemption during the permit renewal period by submitting NPDES Form 3510-11 with Form B2.

☒ - At this time, the permittee is not required to develop and implement a SWPPP.

VARIANCE:
As per the Missouri Clean Water Law § 644.061.4, variances shall be granted for such period of time and under such terms and conditions as shall be specified by the commission in its order. The variance may be extended by affirmative action of the commission. In no event shall the variance be granted for a period of time greater than is reasonably necessary for complying with the Missouri Clean Water Law §§644.006 to 644.141 or any standard, rule or regulation promulgated pursuant to Missouri Clean Water Law §§644.006 to 644.141.

☒ - This operating permit is not drafted under premises of a petition for variance.

WASTELOAD ALLOCATIONS (WLA) FOR LIMITS:
As per [10 CSR 20-2.010(78)], the amount of pollutant each discharger is allowed by the Department to release into a given stream after the Department has determined total amount of pollutant that may be discharged into that stream without endangering its water quality.

☒ - Wasteload allocations were calculated where applicable using water quality criteria or water quality model results and the dilution equation below:

$$Ce = \frac{(Qe + Qs)C - (Qs \times Cs)}{(Qe)}$$ (EPA/505/2-90-001, Section 4.5.5)

Where C = downstream concentration; Ce = effluent concentration
Cs = upstream concentration; Qe = effluent flow
Qs = upstream flow

Chronic wasteload allocations were determined using applicable chronic water quality criteria (CCC: criteria continuous concentration) and stream volume of flow at the edge of the mixing zone (MZ). Acute wasteload allocations were determined using applicable water quality criteria (CMC: criteria maximum concentration) and stream volume of flow at the edge of the zone of initial dilution (ZID).

Water quality based maximum daily and average monthly effluent limitations were calculated using methods and procedures outlined in USEPA's "Technical Support Document For Water Quality-based Toxics Control" (EPA/505/2-90-001).

Number of Samples "n":
Additionally, in accordance with the TSD for water quality-based permitting, effluent quality is determined by the underlying distribution of daily values, which is determined by the Long Term Average (LTA) associated with a particular Wasteload

Allocation (WLA) and by the Coefficient of Variation (CV) of the effluent concentrations. Increasing or decreasing the monitoring frequency does not affect this underlying distribution or treatment performance, which should be, at a minimum, be targeted to comply with the values dictated by the WLA. Therefore, it is recommended that the actual planned frequency of monitoring normally be used to determine the value of "n" for calculating the AML. However, in situations where monitoring frequency is once per month or less, a higher value for "n" must be assumed for AML derivation purposes. Thus, the statistical procedure being employed using an assumed number of samples is "n = 4" at a minimum. For Total Ammonia as Nitrogen, "n = 30" is used.

WLA MODELING:
There are two general types of effluent limitations, technology-based effluent limits (TBELs) and water quality based effluent limits (WQBELs). If TBELs do not provide adequate protection for the receiving waters, then WQBEL must be used.

☒ - A WLA study was either not submitted or determined not applicable by Department staff.

WATER QUALITY STANDARDS:
Per [10 CSR 20-7.031(4)], General Criteria shall be applicable to all waters of the state at all times including mixing zones. Additionally, [40 CFR 122.44(d)(1)] directs the Department to establish in each NPDES permit to include conditions to achieve water quality established under Section 303 of the Clean Water Act, including State narrative criteria for water quality.

WHOLE EFFLUENT TOXICITY (WET) TEST:

☒ - The permittee is required to conduct WET test for this facility.

A WET test is a quantifiable method of determining if a discharge from a facility may be causing toxicity to aquatic life by itself, in combination with or through synergistic responses when mixed with receiving stream water.

Under the federal Clean Water Act (CWA) §101(a)(3), requiring WET testing is reasonably appropriate for site-specific Missouri State Operating Permits for discharges to waters of the state issued under the National Pollutant Discharge Elimination System (NPDES). WET testing is also required by 40 CFR 122.44(d)(1). WET testing ensures that the provisions in the 10 CSR 20-6.010(8)(A)7. and the Water Quality Standards 10 CSR 20-7.031(4)(D),(F),(G),(I)2.A & B are being met. Under [10 CSR 20-6.010(8)(A)4], the Department may require other terms and conditions that it deems necessary to assure compliance with the Clean Water Act and related regulations of the Missouri Clean Water Commission. In addition the following MCWL apply: §§§644.051.3 requires the Department to set permit conditions that comply with the MCWL and CWA; 644.051.4 specifically references toxicity as an item we must consider in writing permits (along with water quality-based effluent limits, pretreatment, etc…); and 644.051.5 is the basic authority to require testing conditions. WET test will be required by facilities meeting the following criteria:

- ☐ Facility is a designated Major.
- ☐ Facility continuously or routinely exceeds its design flow.
- ☐ Facility that exceeds its design population equivalent (PE) for BOD_5 whether or not its design flow is being exceeded.
- ☐ Facility (whether primarily domestic or industrial) that alters its production process throughout the year.
- ☐ Facility handles large quantities of toxic substances, or substances that are toxic in large amounts.
- ☐ Facility has Water Quality-based Effluent Limitations for toxic substances (other than NH_3)
- ☒ Facility is a municipality with a Design Flow ≥ 22,500 gpd.
- ☐ Other – please justify.

40 CFR 122.41(M) - BYPASSES:
The federal Clean Water Act (CWA), Section 402 prohibits wastewater dischargers from "bypassing" untreated or partially treated sewage (wastewater) beyond the headworks. A bypass is defined as an intentional diversion of waste streams from any portion of a treatment facility, [40 CFR 122.41(m)(1)(i)]. Additionally, Missouri regulation 10 CSR 20-7.015(9)(G) states a bypass means the intentional diversion of waste streams from any portion of a treatment facility, except in the case of blending, to waters of the state. Only under exceptional and specified limitations do the federal regulations allow for a facility to bypass some or all of the flow from its treatment process. Bypasses are prohibited by the CWA unless a permittee can meet all of the criteria listed in 40 CFR 122.41(m)(4)(i)(A), (B), & (C). Any bypasses from this facility are subject to the reporting required in 40 CFR 122.41(l)(6) and per Missouri's Standard Conditions I, Section B, part 2.b. Additionally, Anticipated Bypasses include bypasses from peak flow basins or similar devices designed for peak wet weather flows.

☒ - Bypasses occur or have occurred at this facility.

☒ - Outfall #002 is no longer authorized to discharge as it is a Bypass. The Department has developed a Voluntary Compliance Agreement (VCA) for communities that believe they need time to eliminate this discharge. The VCA requires communities to develop and submit bypass elimination plans, to make progress, and to report on this progress. The terms of the VCA is for five (5) years, and is renewable for another five (5) years assuming that adequate progress is being made. In

return, the State of Missouri will not initiate enforcement actions for the terms contained in the VCA. The permittee has entered into a VCA.

Comment:
The VCA addresses discharge of wastewater from this facility which bypasses full treatment. The Department of Natural Resources, Water Protection Program, finalized the VCA for the City of Ava on September 15, 2010. The City of Ava expressed interest in extending the VCA in a letter to dated September 29, 2015. It appears adequate progress is being made in accordance with the VCA, paragraph 17. The VCA has been extended until September 15, 2020.

303(d) LIST & TOTAL MAXIMUM DAILY LOAD (TMDL):
Section 303(d) of the federal Clean Water Act requires that each state identify waters that are not meeting water quality standards and for which adequate water pollution controls have not been required. Water quality standards protect such beneficial uses of water as whole body contact (such as swimming), maintaining fish and other aquatic life, and providing drinking water for people, livestock and wildlife. The 303(d) list helps state and federal agencies keep track of waters that are impaired but not addressed by normal water pollution control programs.

A TMDL is a calculation of the maximum amount of a given pollutant that a body of water can absorb before its water quality is affected. If a water body is determined to be impaired as listed on the 303(d) list, then a watershed management plan will be developed that shall include the TMDL calculation

☐ - This facility discharges to a 303(d) listed stream.

☒ - This facility does not discharge to a 303(d) listed stream.

☐ - This facility discharges to a stream with an EPA approved TMDL.

Part VI –2013 Water Quality Criteria for Ammonia

Upcoming changes to the Water Quality Standard for ammonia may require significant upgrades to wastewater treatment facilities.

On August 22, 2013, the U.S. Environmental Protection Agency (EPA) finalized new water quality criteria for ammonia, based on toxicity studies of mussels and gill breathing snails. Missouri's current ammonia criteria are based on toxicity testing of several species, but did not include data from mussels or gill breathing snails. Missouri is home to 69 of North America's mussel species, which are spread across the state. According to the Missouri Department of Conservation nearly two-thirds of the mussel species in Missouri are considered to be "of conservation concern". Nine species are listed as federally endangered, with an additional species currently proposed as endangered and another species proposed as threatened.

The adult forms of mussels that are seen in rivers, lakes, and streams are sensitive to pollutants because they are sedentary filter feeders. They vacuum up many pollutants with the food they bring in and cannot escape to new habitats, so they can accumulate toxins in their bodies and die. But very young mussels, called glochidia, are exceptionally sensitive to ammonia in water. As a result of a citizen suit, the EPA was compelled to conduct toxicity testing and develop ammonia water quality criteria that would be protective if young mussels may be present in a waterbody. These new criteria will apply to any discharge with ammonia levels that may pose a reasonable potential to violate the standards. Nearly all discharging domestic wastewater treatment facilities (cities, subdivisions, mobile home parks, etc.), as well as certain industrial and stormwater dischargers with ammonia in their effluent, will be affected by this change in the regulations.

When new water quality criteria are established by the EPA, states must adopt them into their regulations in order to keep their authorization to issue permits under the National Pollutant Discharge Elimination System (NPDES). States are required to review their water quality standards every three years, and if new criteria have been developed they must be adopted. States may be more protective than the Federal requirements, but not less protective. Missouri does not have the resources to conduct the studies necessary for developing new water quality standards, and therefore our standards mirror those developed by the EPA; however, we will utilize any available flexibility based on actual species of mussels that are native to Missouri and their sensitivity to ammonia.

Many treatment facilities in Missouri are currently scheduled to be upgraded to comply with the current water quality standards. But these new ammonia standards may require a different treatment technology than the one being considered by the permittee. It is important that permittees discuss any new and upcoming requirements with their consulting engineers to ensure that their treatment systems are capable of complying with the new requirements. The Department encourages permittees to construct treatment technologies that can attain effluent quality that supports the EPA ammonia criteria.

Ammonia toxicity varies by temperature and by pH of the water. Assuming a stable pH value, but taking into account winter and summer temperatures, Missouri includes two seasons of ammonia effluent limitations. Current effluent limitations in this permit are:

Summer – 6.0 mg/L daily maximum, 1.2 mg/L monthly average.
Winter – 11.8 mg/L daily maximum, 2.6 mg/L monthly average.

Under the new EPA criteria, where mussels of the family Unionidae are present or expected to be present, the estimated effluent limitations for a facility in a location such as this that discharges to a receiving stream with no mixing will be:

Season	Temp (°C)	pH (SU)	Total Ammonia Nitrogen CCC (mg/L)	Total Ammonia Nitrogen CMC (mg/L)
Summer	26	7.8	0.7	3.4
Winter	6	7.8	2.3	13

Summer: April 1 – September 30

Chronic WLA: $C_e = ((1.085 + 0.0)0.7 – (0.0 * 0.01))/1.085$
$C_e = 0.7$ mg/L

Acute WLA: $C_e = ((1.085 + 0.0)3.4 – (0.0 * 0.01))/1.085$
$C_e = 3.4$ mg/L

LTA_c = 0.7 mg/L (0.446) = 0.31 mg/L [CV = 2.15, 99th Percentile, 30 day avg.]
LTA_a = 3.4 mg/L (0.112) = 0.38 mg/L [CV = 2.15, 99th Percentile]

Use most protective number of LTA_c or LTA_a.

MDL = 0.31 mg/L (8.95) = 2.8 mg/L [CV = 2.15, 99th Percentile]
AML = 0.31 mg/L (1.73) = 0.5 mg/L [CV = 2.15, 95th Percentile, n =30]

Winter: October 1 – March 31

Chronic WLA: $C_e = ((1.085 + 0.0)2.3 – (0.0 * 0.01))/1.085$
$C_e = 2.3$ mg/L

Acute WLA: $C_e = ((1.085 + 0.0)13 – (0.0 * 0.01))/1.085$
$C_e = 13$ mg/L

LTA_c = 2.3 mg/L (0.568) = 1.31 mg/L [CV = 1.43, 99th Percentile, 30 day avg.]
LTA_a = 13 mg/L (0.150) = 1.95 mg/L [CV = 1.43, 99th Percentile]

Use most protective number of LTA_c or LTA_a.

MDL = 1.31 mg/L (6.68) = 8.7 mg/L [CV = 1.43, 99th Percentile]
AML = 1.31 mg/L (1.48) = 1.9 mg/L [CV = 1.43, 95th Percentile, n =30]

Summer – 2.8 mg/L daily maximum, 0.5 mg/L monthly average.
Winter – 8.7 mg/L daily maximum, 1.9 mg/L monthly average.

These estimated limits above are based in part on the actual performance of the plant at the time of the drafting of this permit and should not be construed as future effluent limitations. Future effluent limits, based on the EPA's 2013 water quality criteria for ammonia, will depend in part on the actual performance of the facility at the time the permit is renewed.

Operating permits for facilities in Missouri must be written based on current statutes and regulations. Therefore permits will be written with the existing effluent limitations until the new standards are adopted. To aid permittees in decision making, an advisory will be added to permit Fact Sheets notifying permittees of the expected effluent limitations for ammonia. When setting schedules of compliance for ammonia effluent limitations, consideration will be given to facilities that have recently constructed upgraded facilities to meet the current ammonia limitations.

For more information on this topic feel free to contact the Missouri Department of Natural Resources, Water Protection Program, Water Pollution Control Branch, Operating Permits Section at (573) 751-1300.

Part VII – Effluent Limits Determination

APPLICABLE DESIGNATIONS OF WATERS OF THE STATE:
As per Missouri's Effluent Regulations [10 CSR 20-7.015], the waters of the state are divided into the below listed seven (7) categories. Each category lists effluent limitations for specific parameters, which are presented in each outfall's Effluent Limitation Table and further discussed in the Derivation & Discussion of Limits section.

- ☐ Missouri or Mississippi River [10 CSR 20-7.015(2)]
- ☐ Lake or Reservoir [10 CSR 20-7.015(3)]
- ☒ Losing [10 CSR 20-7.015(4)]
- ☐ Metropolitan No-Discharge [10 CSR 20-7.015(5)]
- ☐ Subsurface Water [10 CSR 20-7.015(7)]
- ☐ All Other Waters [10 CSR 20-7.015(8)]

OUTFALL #001 – MAIN FACILITY OUTFALL

Effluent limitations derived and established in the below Effluent Limitations Table are based on current operations of the facility. Future permit action due to facility modification may contain new operating permit terms and conditions that supersede the terms and conditions, including effluent limitations, of this operating permit.

EFFLUENT LIMITATIONS TABLE:

PARAMETER	Unit	Basis for Limits	Daily Maximum	Weekly Average	Monthly Average	Modified	Previous Permit Limit	Sampling Frequency	Reporting Frequency	Sample Type ****
Flow	MGD	1	*		*	No	*/*	1/week-days	monthly	M
BOD_5	mg/L	1		15	10	No	15/10	1/week	monthly	C
TSS	mg/L	1		20	15	No	20/15	1/week	monthly	C
Ammonia as N (Apr 1 –Sep 30)	mg/L	2, 3	6.0		1.2	Yes	8.9/2.7	1/week	monthly	G
Ammonia as N (Oct 1 – Mar 31)	mg/L	2, 3	11.8		2.6	Yes	9.2/2.8	1/week	monthly	G
Escherichia coli **	#/100mL	1, 3	126		*	Yes	Fecal 1000/ 400	1/week	monthly	G
Nitrates as N	mg/L	1, 7	*		*	No	*/*	1/week	monthly	G
Oil & Grease	mg/L	1, 3	15		10	No	15/10	1/quarter	quarterly	G
Total Nitrogen	mg/L	1	*		*	Yes	***	1/quarter	quarterly	G
Total Phosphorus	mg/L	1	*		*	Yes	***	1/quarter	quarterly	G
Acute Whole Effluent Toxicity	TUa	1, 9	*			Yes	pass / fail	1/permit cycle	1/permit cycle	C
PARAMETER	Unit	Basis for Limits	Minimum		Maximum	Modified	Previous Permit Limit	Sampling Frequency	Reporting Frequency	Sample Type
pH	SU	1	6.5		9.0	Yes	6.0-9.0	1/week	monthly	G
PARAMETER	Unit	Basis for Limits	Daily Minimum		Monthly Avg Min	Modified	Previous Permit Limit	Sampling Frequency	Reporting Frequency	Sample Type
Dissolved Oxygen (DO)	mg/L	3, 7	*		*	No	*/*	1/week	monthly	G

* - Monitoring requirement only.
** - #/100mL; Monitoring only for a monthly average. No more than 10% of samples shall exceed 126 #/100 mL daily maximum.
*** - Parameter not previously established in previous state operating permit.

**** - C = 24-hour composite
G = Grab
M = Total Measured / Measured
E = 24-hour estimate

Basis for Limitations Codes:
1. State or Federal Regulation/Law
2. Water Quality Standard (includes RPA)
3. Water Quality Based Effluent Limits
4. Antidegradation Review
5. Antidegradation Policy
6. Water Quality Model
7. Best Professional Judgment
8. TMDL or Permit in lieu of TMDL
9. WET Test Policy

OUTFALL #001 – DERIVATION AND DISCUSSION OF LIMITS:

- **Flow**. In accordance with [40 CFR Part 122.44(i)(1)(ii)] the volume of effluent discharged from each outfall is needed to assure compliance with permitted effluent limitations. If the permittee is unable to obtain effluent flow, then it is the responsibility of the permittee to inform the Department, which may require the submittal of an operating permit modification.

- **Biochemical Oxygen Demand (BOD_5).** 15 mg/L Weekly Average and 10 mg/L Monthly Average effluent limitations, as per [10 CSR 20-7.015].

- **Total Suspended Solids (TSS).** 20 mg/L Weekly Average and 15 mg/L Monthly Average effluent limitations, as per [10 CSR 20-7.015].

- **Total Ammonia Nitrogen**. Early Life Stages Present Total Ammonia Nitrogen criteria apply [10 CSR 20-7.031(5)(B)7.C. & Table B3]. Background total ammonia nitrogen = 0.01 mg/L. No mixing considerations allowed; therefore, WLA = appropriate criterion.

Season	Temp (°C)	pH (SU)	Total Ammonia Nitrogen CCC (mg/L)	Total Ammonia Nitrogen CMC (mg/L)
Summer	26	7.8	1.5	12.1
Winter	6	7.8	3.1	12.1

Summer: April 1 – September 30

Chronic WLA: $C_e = ((1.085 + 0.0)1.5 – (0.0 * 0.01))/1.085$
$C_e = 1.5$ mg/L

Acute WLA: $C_e = ((1.085 + 0.0)12.1 – (0.0 * 0.01))/1.085$
$C_e = 12.1$ mg/L

LTA_c = 1.5 mg/L (0.446) = 0.67 mg/L [CV = 2.15, 99th Percentile, 30 day avg.]
LTA_a = 12.1 mg/L (0.112) = 1.35 mg/L [CV = 2.15, 99th Percentile]

Use most protective number of LTA_c or LTA_a.

MDL = 0.67 mg/L (8.95) = 6.0 mg/L [CV = 2.15, 99th Percentile]
AML = 0.67 mg/L (1.73) = 1.2 mg/L [CV = 2.15, 95th Percentile, n =30]

Winter: October 1 – March 31

Chronic WLA: $C_e = ((1.085 + 0.0)3.1 – (0.0 * 0.01))/1.085$
$C_e = 3.1$ mg/L

Acute WLA: $C_e = ((1.085 + 0.0)12.1 – (0.0 * 0.01))/1.085$
$C_e = 12.1$ mg/L

LTA_c = 3.1 mg/L (0.568) = 1.76 mg/L [CV = 1.43, 99th Percentile, 30 day avg.]
LTA_a = 12.1 mg/L (0.150) = 1.81 mg/L [CV = 1.43, 99th Percentile]

Use most protective number of LTA_c or LTA_a.

MDL = 1.76 mg/L (6.68) = 11.8 mg/L [CV = 1.43, 99th Percentile]
AML = 1.76 mg/L (1.48) = 2.6 mg/L [CV = 1.43, 95th Percentile, n =30]

- ***Escherichia coli (E. coli)***. Discharges to losing streams shall not exceed 126 per 100 mL as a Daily Maximum at any time, as per 10 CSR 20-7.031(5)(C). Monitoring only for a monthly average. No more than 10% of samples shall exceed 126 #/100 mL daily maximum as per 10 CSR 20-7.015(9)(B)1.G.

- **Nitrates as N**. This facility discharges to a losing stream. Monitoring only has been included in the permit for nitrates in order to determine if the discharge can reasonably be expected to impact specific drinking water wells. Data will be reviewed upon renewal to determine if an effluent limitation is necessary to protect water quality.

- **Oil & Grease**. Conventional pollutant, effluent limitation for protection of aquatic life; 10 mg/L monthly average, 15 mg/L daily maximum.

- **Total Phosphorus and Total Nitrogen**. Monitoring required for facilities greater than 100,000 gpd design flow per 10 CSR 20-7.015(9)(D)7. Total Nitrogen shall be determined by testing for Total Kjeldahl Nitrogen (TKN) and Nitrate + Nitrite and reporting the sum of the results (reported as N). Nitrate + Nitrite can be analyzed together or separately.

- **pH**. – 6.5-9.0 SU. Technology based effluent limitations of 6.0-9.0 SU [10 CSR 20-7.015] are not protective of the Water Quality Standard, which states that water contaminants shall not cause pH to be outside the range of 6.5-9.0 SU. No mixing zone is allowed due to the classification of the receiving stream, therefore the water quality standard must be met at the outfall.

- **Dissolved Oxygen**. Monitoring only for dissolved oxygen has been included to determine if the facility has the reasonable potential to cause a violation of water quality standards in the receiving stream. Data will be reviewed upon renewal to determine if an effluent limitation is necessary to protect water quality.

Whole Effluent Toxicity

Acute Whole Effluent Toxicity. Monitoring requirement only. Monitoring is required to determine if reasonable potential exists for this facility's discharge to exceed water quality standards.

Acute and/or Chronic Allowable Effluent Concentrations (AECs) for facilities that discharge to Waters of the State lacking designated uses, Class C, Class P (with default Mixing Considerations), or Lakes [10 CSR 20-7.031(5)(A)4.B.(IV)(b)] are 100%, 50%, 25%, 12.5%, & 6.25%.

Parameters Removed:

- **Temperature**. The Department has concluded that domestic wastewater treatment facilities have no reasonable potential to exceed Water Quality Standards for temperature. Due to the fact that this facility will have a minimal effect on temperature this parameter has been removed from the permit.

Sampling Frequency Justification:

Sampling and Reporting Frequency was retained from previous permit. Weekly sampling is required for *E. coli*, per 10 CSR 20-7.015(9)(D)6.A.

WET Test Sampling Frequency Justification. WET Testing schedules and intervals are established in accordance with the Department's Permit Manual; Section 5.2 *Effluent Limits / WET Testing for Compliance Bio-monitoring*. It is recommended that WET testing be conducted during the period of lowest stream flow.

Acute Whole Effluent Toxicity

☒ -No less than **ONCE/PERMIT CYCLE:**
☒ -Municipality with a design flow ≥ 22,500 gpd, but less than 1.0 MGD.
☐ - Other, please justify.

Sampling Type Justification

As per 10 CSR 20-7.015, BOD_5, TSS, and WET test samples collected for mechanical plants shall be a 24 hour composite sample. Grab samples, however, must be collected for pH, Ammonia as N, *E. coli*, Oil & Grease, and Total Phosphorus. This is due to the holding time restriction for *E. coli*, the volatility of Ammonia, and the fact that pH and DO cannot be preserved and must be sampled in the field. As Ammonia, Oil & Grease, and Total Phosphorus samples must be immediately preserved, these samples are to be collected as a grab.

Part VIII – Cost Analysis for Compliance

Pursuant to Section 644.145, RSMo, when issuing permits under this chapter that incorporate a new requirement for discharges from publicly owned combined or separate sanitary or storm sewer systems or publicly owned treatment works, or when enforcing provisions of this chapter or the Federal Water Pollution Control Act, 33 U.S.C. 1251 et seq., pertaining to any portion of a publicly owned combined or separate sanitary or storm sewer system or [publicly owned] treatment works, the Department of Natural Resources shall make a "finding of affordability" on the costs to be incurred and the impact of any rate changes on ratepayers upon which to base such permits and decisions, to the extent allowable under this chapter and the Federal Water Pollution Control Act. This process is completed through a cost analysis for compliance. Permits that do not include new requirements may be deemed affordable.

☒ - The Department is required to determine "findings of affordability" because the permit applies to a **combined or separate sanitary sewer system for a publically-owned treatment works.**

Cost Analysis for Compliance - The Department has made a reasonable search for empirical data indicating the permit is affordable. The search consisted of a review of Department records that might contain economic data on the community, a review of information provided by the applicant as part of the application, and public comments received in response to public notices of this draft permit. If the empirical cost data was used by the permit writer, this data may consist of median household income, any other ongoing projects that the Department has knowledge, and other demographic financial information that the community provided as contemplated by Section 644. 145.3. See **Appendix – Cost Analysis for Compliance.**

Part IX – Administrative Requirements

On the basis of preliminary staff review and the application of applicable standards and regulations, the Department, as administrative agent for the Missouri Clean Water Commission, proposes to issue a permit(s) subject to certain effluent limitations, schedules, and special conditions contained herein and within the operating permit. The proposed determinations are tentative pending public comment.

PERMIT SYNCHRONIZATION:
The Department of Natural Resources is currently undergoing a synchronization process for operating permits. Permits are normally issued on a five-year term, but to achieve synchronization many permits will need to be issued for less than the full five years allowed by regulation. The intent is that all permits within a watershed will move through the Watershed Based Management (WBM) cycle together will all expire in the same fiscal year. This will allow further streamlining by placing multiple permits within a smaller geographic area on public notice simultaneously, thereby reducing repeated administrative efforts. This will also allow the Department to explore a watershed based permitting effort at some point in the future. Renewal applications must continue to be submitted within 180 days of expiration, however, in instances where effluent data from the previous renewal is less than 4 years old, that data may be re-submitted to meet the requirements of the renewal application. If the permit provides a schedule of compliance for meeting new water quality based effluent limits beyond the expiration date of the permit, the time remaining in the schedule of compliance will be allotted in the renewed permit. This permit will expire in the 3rd Quarter of calendar year 2019.

PUBLIC NOTICE:
The Department shall give public notice that a draft permit has been prepared and its issuance is pending. Additionally, public notice will be issued if a public hearing is to be held because of a significant degree of interest in and water quality concerns related to a draft permit. No public notice is required when a request for a permit modification or termination is denied; however, the requester and permittee must be notified of the denial in writing. The Department must issue public notice of a pending operating permit or of a new or reissued statewide general permit. The public comment period is the length of time not less than 30 days following the date of the public notice which interested persons may submit written comments about the proposed permit. For persons wanting to submit comments regarding this proposed operating permit, then please refer to the Public Notice page located at the front of this draft operating permit. The Public Notice page gives direction on how and where to submit appropriate comments.

☒ - The Public Notice period for this operating permit was from December 24, 2015 to January 25, 2016. No responses received.

DATE OF FACT SHEET: OCTOBER 29, 2015

COMPLETED BY:

CAMERON EISTERHOLD, ENVIRONMENTAL SPECIALIST
MISSOURI DEPARTMENT OF NATURAL RESOURCES
WATER PROTECTION PROGRAM
OPERATING PERMITS SECTION - DOMESTIC WASTEWATER UNIT
(573) 751-7326
cameron.eisterhold@dnr.mo.gov

Appendices

APPENDIX - CLASSIFICATION WORKSHEET:

ITEM	POINTS POSSIBLE	POINTS ASSIGNED
Maximum Population Equivalent (P.E.) served (Max 10 pts.)	1 pt./10,000 PE or major fraction thereof.	0
Maximum: 10 pt Design Flow (avg. day) or peak month; use greater (Max 10 pts.)	1 pt. / MGD or major fraction thereof.	0
EFFLUENT DISCHARGE RECEIVING WATER SENSITIVITY:		
Missouri or Mississippi River	0	
All other stream discharges except to losing streams and stream reaches supporting whole body contact	1	
Discharge to lake or reservoir outside of designated whole body contact recreational area	2	
Discharge to losing stream, or stream, lake or reservoir area supporting whole body contact recreation	3	3
PRELIMINARY TREATMENT - Headworks		
Screening and/or comminution	3	3
Grit removal	3	
Plant pumping of main flow (lift station at the headworks)	3	
PRIMARY TREATMENT		
Primary clarifiers	5	5
Combined sedimentation/digestion	5	
Chemical addition (except chlorine, enzymes)	4	
REQUIRED LABORATORY CONTROL – performed by plant personnel (highest level only)		
Push – button or visual methods for simple test such as pH, Settleable solids	3	
Additional procedures such as DO, COD, BOD, titrations, solids, volatile content	5	5
More advanced determinations such as BOD seeding procedures, fecal coliform, nutrients, total oils, phenols, etc.	7	
Highly sophisticated instrumentation, such as atomic absorption and gas chromatograph	10	
ALTERNATIVE FATE OF EFFLUENT		
Direct reuse or recycle of effluent	6	
Land Disposal – low rate	3	
High rate	5	
Overland flow	4	
Total from page **ONE (1)**	----	16

APPENDIX - CLASSIFICATION WORKSHEET (CONTINUED):

ITEM	POINTS POSSIBLE	POINTS ASSIGNED
VARIATION IN RAW WASTE (highest level only) (DMR exceedances and Design Flow exceedances)		
Variation do not exceed those normally or typically expected	0	0
Recurring deviations or excessive variations of 100 to 200 % in strength and/or flow	2	
Recurring deviations or excessive variations of more than 200 % in strength and/or flow	4	
Raw wastes subject to toxic waste discharge	6	
SECONDARY TREATMENT		
Trickling filter and other fixed film media with secondary clarifiers	10	
Activated sludge with secondary clarifiers (including extended aeration and oxidation ditches)	15	15
Stabilization ponds without aeration	5	
Aerated lagoon	8	
Advanced Waste Treatment Polishing Pond	2	
Chemical/physical – without secondary	15	
Chemical/physical – following secondary	10	10
Biological or chemical/biological	12	
Carbon regeneration	4	
DISINFECTION		
Chlorination or comparable	5	
Dechlorination	2	
On-site generation of disinfectant (except UV light)	5	
UV light	4	4
SOLIDS HANDLING - SLUDGE		
Solids Handling Thickening	5	
Anaerobic digestion	10	
Aerobic digestion	6	6
Evaporative sludge drying	2	
Mechanical dewatering	8	
Solids reduction (incineration, wet oxidation)	12	
Land application	6	6
Total from page **TWO (2)**	----	36
Total from page **ONE (1)**	---	16
Grand Total	---	52

☐ - A: 71 points and greater
☒ - B: 51 points – 70 points
☐ - C: 26 points – 50 points
☐ - D: 0 points – 25 points

APPENDIX – RPA RESULTS:

Parameter	CMC*	RWC Acute*	CCC*	RWC Chronic*	n**	Range max/min	CV***	MF	RP Yes/No
Total Ammonia as Nitrogen (Summer) mg/L	12.1	26.01	1.5	26.01	30.00	5/0.1	2.15	5.20	YES
Total Ammonia as Nitrogen (Winter) mg/L	12.1	12.06	3.1	12.06	30.00	3.2/0.01	1.43	3.77	YES

N/A – Not Applicable
* - Units are (µg/L) unless otherwise noted.
** - If the number of samples is 10 or greater, then the CV value must be used in the WQBEL for the applicable constituent. If the number of samples is < 10, then the default CV value must be used in the WQBEL for the applicable constituent.
*** - Coefficient of Variation (CV) is calculated by dividing the Standard Deviation of the sample set by the Mean of the same sample set.
RWC – Receiving Water Concentration. It is the concentration of a toxicant or the parameter toxicity in the receiving water after mixing (if applicable).
n – Is the number of samples.
MF – Multiplying Factor. 99% Confidence Level and 99% Probability Basis.
RP – Reasonable Potential. It is where an effluent is projected or calculated to cause an excursion above a water quality standard based on a number of factors including, as a minimum, the four factors listed in 40 CFR 122.44(d)(1)(ii).

Reasonable Potential Analysis is conducted as per (TSD, EPA/505/2-90-001, Section 3.3.2). A more detailed version including calculations of this RPA is available upon request.

APPENDIX – ALTERNATIVE: PROCESS FLOW DIAGRAM FOR AVA WASTEWATER TREATMENT PLANT

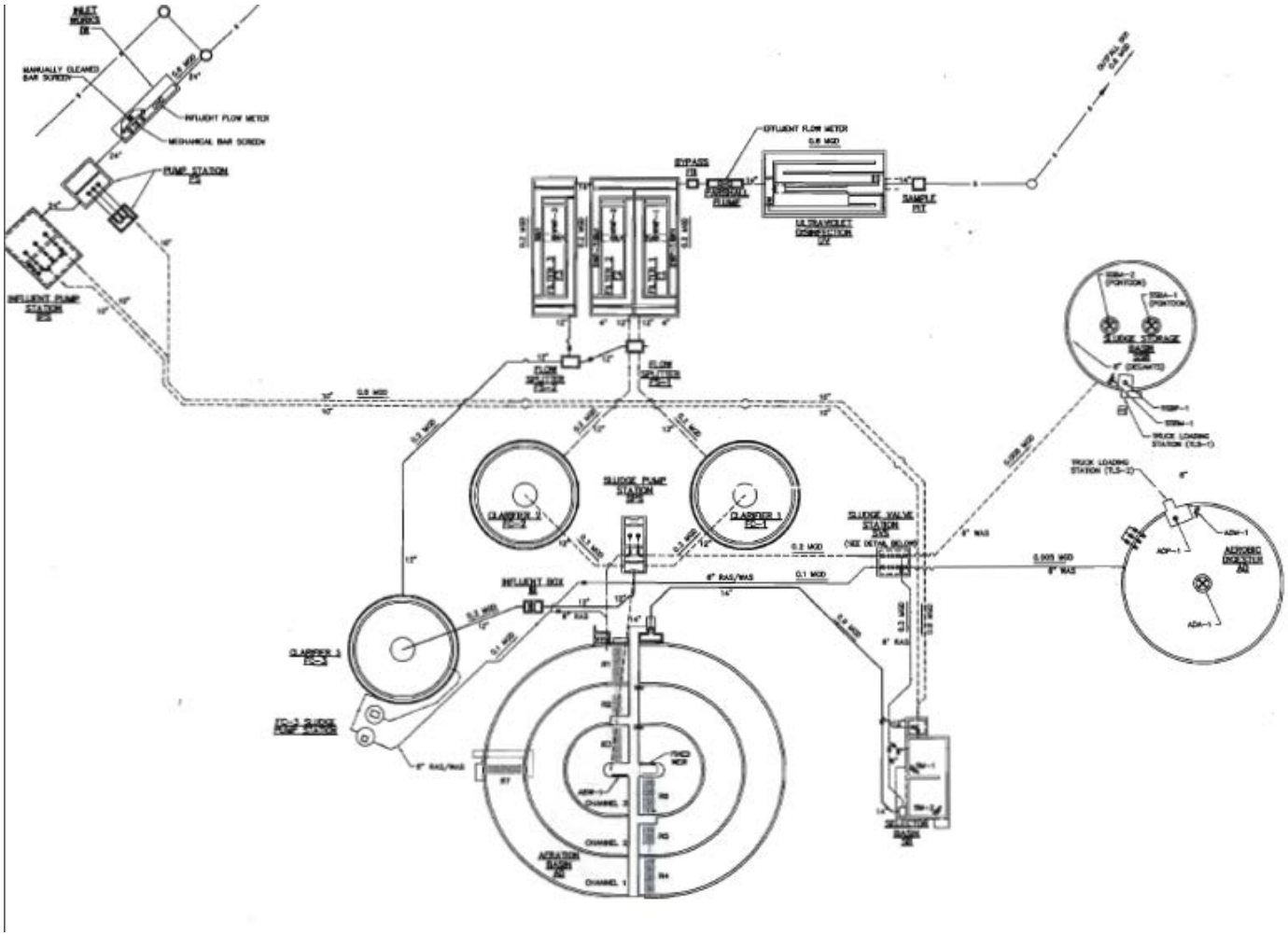

APPENDIX – COST ANALYSIS FOR COMPLIANCE:

Missouri Department of Natural Resources
Water Protection Program
Cost Analysis for Compliance
(In accordance with RSMo 644.145)

Ava Wastewater Treatment Plant, Permit Renewal
City of Ava
Missouri State Operating Permit #MO-0056260

Section 644.145 RSMo requires the Department of Natural Resources (DNR) to make a "finding of affordability" when "issuing permits under" or "enforcing provisions of" state or federal clean water laws "pertaining to any portion of a combined or separate sanitary sewer system for publicly-owned treatment works."

The Department is required to issue a permit with final effluent limits in accordance with 644.051.1.(1) RSMo, 644.051.1.(2) RSMo, and the Clean Water Act. The practical result of this analysis will be to allow longer compliance schedules to mitigate adverse impact to distressed populations resulting from the costs of upgrading the wastewater treatment facility.

This cost analysis is based on data available to the Department as provided by the permittee and data obtained from readily available sources. For the most accurate analysis, it is essential that the permittee provides the Department with current information about the City's financial and socioeconomic situation. The financial questionnaire available to permittees on the DNR website (http://dnr.mo.gov/forms/780-2511-f.pdf) should have been submitted with the permit renewal application. If it was not received with the renewal application, the Department sent a request to complete it with the welcome letter.

Facility Description: **Stormwater lagoon / influent pump station / bar screen / influent selector basin / oxidation ditch / three (3) clarifiers / three (3) traveling bridge sand filters / ultraviolet disinfection / two (2) aerobic sludge digesters / sludge is land applied by applicant.**

Residential Connections:	1,062
Commercial Connections:	244
Industrial Connections:	1
Total Connections for this facility:	1,307

New Permit Requirements:

The permit requires compliance with new quarterly monitoring requirements for total phosphorus and total nitrogen.

Anticipated Costs Associated with Complying with the New Requirements:

The total cost estimated for new quarterly monitoring requirements is $400 annually. This cost, if financed through user fees, might cost each household an extra $0.03[1] per month. A community sets their user rates based on several factors. The percentage of the current user rate that is available to cover new debt is unknown to the Department.

(1) A community's financial capability and ability to raise or secure necessary funding;

Due to the minimal cost associated with this new permit requirement, the Department anticipates the City of Ava has the means to raise $400 annually.

(2) Affordability of pollution control options for the individuals or households at or below the median household income level of the community;

The total cost estimated for the new quarterly monitoring requirements is $400 annually. This cost, if financed through user fees, might cost each household an extra $0.03 per month. This would make the additional cost per household as a percent of median household income (MHI) 0.001%[2] based on the City's MHI of $24,810. Due to the minimal cost associated with this new requirement, the Department anticipates an extremely low to no rate increase will be necessary that could impact individuals or households of the community.

(3) An evaluation of the overall costs and environmental benefits of the control technologies;

Nutrient Monitoring

Nutrients are mineral compounds that are required for organisms to grow and thrive. Of the six (6) elemental macronutrients, Nitrogen and Phosphorus are generally not readily available and limit growth of organisms. Excess nitrogen and phosphorus will cause a shift in the ecosystem's food web. Once excess nitrogen and phosphorous are introduced into a waterbody, some species' populations will dramatically increase, while other populations will not be able to sustain life. Competition and productivity are two factors in which nutrients can alter aquatic ecosystems and the designated uses of a waterbody. For example, designated uses, such as drinking water sources and recreational uses become impaired when algal blooms take over a waterbody. These blooms can cause foul tastes and odors in the drinking water, unsightly appearance, and fish mortality in the waterbody. Some algae also produce toxins that may cause serious adverse health conditions such as liver damage, tumor promotion, paralysis, and kidney damage. The monitoring requirements for Nitrogen and Phosphorus have been added to the permit to provide data regarding the health of the receiving stream's aquatic life. A healthy ecosystem is beneficial as it provides reduced impacts on human and aquatic health as well as recreational opportunities.

(4) Inclusion of ongoing costs of operating and maintaining the existing wastewater collection and treatment system, including payments on outstanding debts for wastewater collection and treatment systems when calculating projected rates:

The community reported their outstanding debt for their current wastewater collection and treatment systems to be $2,175,000. The community reported that each user pays $14.10 each month, which is used toward payments on the current outstanding debt.

(5) An inclusion of ways to reduce economic impacts on distressed populations in the community, including but not limited to low and fixed income populations. This requirement includes but is not limited to:

(a) Allowing adequate time in implementation schedules to mitigate potential adverse impacts on distressed populations resulting from the costs of the improvements and taking into consideration local community economic considerations.
(b) Allowing for reasonable accommodations for regulated entities when inflexible standards and fines would impose a disproportionate financial hardship in light of the environmental benefits to be gained.

Socioeconomic Data[3-6:]

Potentially Distressed Populations – City of Ava	
Unemployment	7.4%
Adjusted Median Household Income (MHI)*	$24,810
Percent Change in MHI (1990-2012)	+11.1%
Percent Population Growth/Decline (1990-2012)	-1.2%
Change in Median Age in Years (1990-2012)	+2.1
Percent of Households in Poverty	27.9%
Percent of Households Relying on Food Stamps	21.6%

(6) An assessment of other community investments and operating costs relating to environmental improvements and public health protection;

The community reported the following pertaining to any other investments relating to environmental improvements; The City of Ava completed major water and wastewater upgrades over the last ten years resulting in the current debt load of $3,611,400. Items remaining include replacement of a lift station, major water and sewer line replacement, and installation of a back-up generator for an existing drinking water well.

(7) An assessment of factors set forth in the United States Environmental Protection Agency's guidance, including but not limited to the "Combined Sewer Overflow Guidance for Financial Capability Assessment and Schedule Development" that may ease the cost burdens of implementing wet weather control plans, including but not limited to small system considerations, the attainability of water quality standards, and the development of wet weather standards;

The new sampling requirements associated with this permit will not impose a financial burden on the community, nor will the new requirements require the City of Ava to seek funding from an outside source.

(8) An assessment of any other relevant local community economic condition.

The community reported the following pertaining to any other relevant local economic conditions; 54% of households in Ava earn less than $25,000; 19% of households receive Food Stamps/SNAP benefits; 20% of all families and 34% of families with children live below the poverty level (66% of single-mother families); 23% of the population 25 years and over do not have a high school diploma; 40% of homeowners and 31% of renters pay 35% or more of their income for housing; 69% of owner-occupied housing is valued at less than $100,000; almost 62% of Ava public school students qualify for the free and reduced lunch program.

Conclusion and Finding

As a result of new regulations, the Department is proposing modifications to the current operating permit that may require the permittee to increase monitoring. The Department identified the actions for which cost analysis for compliance is required under Section 644.145 RSMo.

The Department estimates the cost for quarterly monitoring for total phosphorus and total nitrogen is $400 per year. Should these additional costs be financed through user fees, it may require user fees 0.001% of the community's MHI.

The Department considered the eight (8) criteria presented in subsection 644.145.3 when evaluating the cost associated with the relevant actions. Taking into consideration these criteria, this analysis examined whether the above referenced permit modifications affects the ability of an individual customer or household to pay a utility bill without undue hardship or unreasonable sacrifice in the essential lifestyle or spending patterns of the individual or household. As a result of reviewing the above criteria, the Department hereby finds that the action described above may result in a low burden with regard to the community's overall financial capability and a low financial impact for most individual customers/households; therefore, the new permit requirements are affordable.

References:

1. (($400.00/1,307)/12 months) = $0.03
2. (0.03/(24,810/12))*100 = 0.001%
3. Unemployment data was obtained from Missouri Department of Economic Development (July 2014) – http://www.missourieconomy.org/pdfs/urel1407.pdf
4. Median Household Income data from American Community Survey – Median income in the past 12 months – http://factfinder2.census.gov/faces/tableservices/jsf/pages/productview.xhtml?fpt=table
5. Population trend data was obtained from online at: 2012 Census Bureau Population Data - http://factfinder2.census.gov/faces/tableservices/jsf/pages/productview.xhtml?fpt=table, 2000 Census Bureau Population Data - http://www.census.gov/popest/data/cities/totals/2009/tables/SUB-EST2009-04-29.xls, 1990 Census Bureau Population Data - http://www.census.gov/prod/cen1990/cp1/cp-1-27.pdf
6. Poverty data – American Community Survey- http://factfinder2.census.gov/faces/nav/jsf/pages/searchresults.xhtml?refresh=t

STANDARD CONDITIONS FOR NPDES PERMITS
ISSUED BY
THE MISSOURI DEPARTMENT OF NATURAL RESOURCES
MISSOURI CLEAN WATER COMMISSION
REVISED
AUGUST 1, 2014

These Standard Conditions incorporate permit conditions as required by 40 CFR 122.41 or other applicable state statutes or regulations. These minimum conditions apply unless superseded by requirements specified in the permit.

Part I – General Conditions
Section A – Sampling, Monitoring, and Recording

1. **Sampling Requirements.**
   a. Samples and measurements taken for the purpose of monitoring shall be representative of the monitored activity.
   b. All samples shall be taken at the outfall(s) or Missouri Department of Natural Resources (Department) approved sampling location(s), and unless specified, before the effluent joins or is diluted by any other body of water or substance.

2. **Monitoring Requirements**.
   a. Records of monitoring information shall include:
      i. The date, exact place, and time of sampling or measurements;
      ii. The individual(s) who performed the sampling or measurements;
      iii. The date(s) analyses were performed;
      iv. The individual(s) who performed the analyses;
      v. The analytical techniques or methods used; and
      vi. The results of such analyses.
   b. If the permittee monitors any pollutant more frequently than required by the permit at the location specified in the permit using test procedures approved under 40 CFR Part 136, or another method required for an industry-specific waste stream under 40 CFR subchapters N or O, the results of such monitoring shall be included in the calculation and reported to the Department with the discharge monitoring report data (DMR) submitted to the Department pursuant to Section B, paragraph 7.

3. **Sample and Monitoring Calculations.** Calculations for all sample and monitoring results which require averaging of measurements shall utilize an arithmetic mean unless otherwise specified in the permit.

4. **Test Procedures**. The analytical and sampling methods used shall conform to the reference methods listed in 10 CSR 20-7.015 unless alternates are approved by the Department. The facility shall use sufficiently sensitive analytical methods for detecting, identifying, and measuring the concentrations of pollutants. The facility shall ensure that the selected methods are able to quantify the presence of pollutants in a given discharge at concentrations that are low enough to determine compliance with Water Quality Standards in 10 CSR 20-7.031 or effluent limitations unless provisions in the permit allow for other alternatives. A method is "sufficiently sensitive" when; 1) the method minimum level is at or below the level of the applicable water quality criterion for the pollutant or, 2) the method minimum level is above the applicable water quality criterion, but the amount of pollutant in a facility's discharge is high enough that the method detects and quantifies the level of pollutant in the discharge, or 3) the method has the lowest minimum level of the analytical methods approved under 10 CSR 20-7.015. These methods are also required for parameters that are listed as monitoring only, as the data collected may be used to determine if limitations need to be established. A permittee is responsible for working with their contractors to ensure that the analysis performed is sufficiently sensitive.

5. **Record Retention.** Except for records of monitoring information required by the permit related to the permittee's sewage sludge use and disposal activities, which shall be retained for a period of at least five (5) years (or longer as required by 40 CFR part 503), the permittee shall retain records of all monitoring information, including all calibration and maintenance records and all original strip chart recordings for continuous monitoring instrumentation, copies of all reports required by the permit, and records of all data used to complete the application for the permit, for a period of at least three (3) years from the date of the sample, measurement, report or application. This period may be extended by request of the Department at any time.

6. **Illegal Activities.**
   a. The Federal Clean Water Act provides that any person who falsifies, tampers with, or knowingly renders inaccurate any monitoring device or method required to be maintained under the permit shall, upon conviction, be punished by a fine of not more than $10,000, or by imprisonment for not more than two (2) years, or both. If a conviction of a person is for a violation committed after a first conviction of such person under this paragraph, punishment is a fine of not more than $20,000 per day of violation, or by imprisonment of not more than four (4) years, or both.
   b. The Missouri Clean Water Law provides that any person or who falsifies, tampers with, or knowingly renders inaccurate any monitoring device or method required to be maintained pursuant to sections 644.006 to 644.141 shall, upon conviction, be punished by a fine of not more than $10,000, or by imprisonment for not more than six (6) months, or by both. Second and successive convictions for violation under this paragraph by any person shall be punished by a fine of not more than $50,000 per day of violation, or by imprisonment for not more than two (2) years, or both.

Section B – Reporting Requirements

1. **Planned Changes.**
   a. The permittee shall give notice to the Department as soon as possible of any planned physical alterations or additions to the permitted facility when:
      i. The alteration or addition to a permitted facility may meet one of the criteria for determining whether a facility is a new source in 40 CFR 122.29(b); or
      ii. The alteration or addition could significantly change the nature or increase the quantity of pollutants discharged. This notification applies to pollutants which are subject neither to effluent limitations in the permit, nor to notification requirements under 40 CFR 122.42;
      iii. The alteration or addition results in a significant change in the permittee's sludge use or disposal practices, and such alteration, addition, or change may justify the application of permit conditions that are different from or absent in the existing permit, including notification of additional use or disposal sites not reported during the permit application process or not reported pursuant to an approved land application plan;
      iv. Any facility expansions, production increases, or process modifications which will result in a new or substantially different discharge or sludge characteristics must be reported to the Department 60 days before the facility or process modification begins. Notification may be accomplished by application for a new permit. If the discharge does not violate effluent limitations specified in the permit, the facility is to submit a notice to the Department of the changed discharge at least 30 days before such changes. The Department may require a construction permit and/or permit modification as a result of the proposed changes at the facility.

2. **Non-compliance Reporting.**
   a. The permittee shall report any noncompliance which may endanger health or the environment. Relevant information shall be provided orally or via the current electronic method approved by the Department, within 24 hours from the time the permittee becomes aware of the circumstances, and shall be reported to the appropriate Regional Office during normal business hours or the Environmental Emergency Response hotline at 573-634-2436 outside of normal business hours. A written submission shall also be provided within five (5) business days of the time the permittee becomes aware of the circumstances. The written submission shall contain a description of the noncompliance and its cause; the period of noncompliance, including exact dates and times, and if the noncompliance has not been corrected, the anticipated time it is expected to continue; and steps taken or planned to reduce, eliminate, and prevent reoccurrence of the noncompliance.

b. The following shall be included as information which must be reported within 24 hours under this paragraph.
   i. Any unanticipated bypass which exceeds any effluent limitation in the permit.
   ii. Any upset which exceeds any effluent limitation in the permit.
   iii. Violation of a maximum daily discharge limitation for any of the pollutants listed by the Department in the permit required to be reported within 24 hours.
c. The Department may waive the written report on a case-by-case basis for reports under paragraph 2. b. of this section if the oral report has been received within 24 hours.

3. **Anticipated Noncompliance**. The permittee shall give advance notice to the Department of any planned changes in the permitted facility or activity which may result in noncompliance with permit requirements. The notice shall be submitted to the Department 60 days prior to such changes or activity.

4. **Compliance Schedules.** Reports of compliance or noncompliance with, or any progress reports on, interim and final requirements contained in any compliance schedule of the permit shall be submitted no later than 14 days following each schedule date. The report shall provide an explanation for the instance of noncompliance and a proposed schedule or anticipated date, for achieving compliance with the compliance schedule requirement.

5. **Other Noncompliance.** The permittee shall report all instances of noncompliance not reported under paragraphs 2, 3, and 6 of this section, at the time monitoring reports are submitted. The reports shall contain the information listed in paragraph 2. a. of this section.

6. **Other Information**. Where the permittee becomes aware that it failed to submit any relevant facts in a permit application, or submitted incorrect information in a permit application or in any report to the Department, it shall promptly submit such facts or information.

7. **Discharge Monitoring Reports.**
   a. Monitoring results shall be reported at the intervals specified in the permit.
   b. Monitoring results must be reported to the Department via the current method approved by the Department, unless the permittee has been granted a waiver from using the method. If the permittee has been granted a waiver, the permittee must use forms provided by the Department.
   c. Monitoring results shall be reported to the Department no later than the 28th day of the month following the end of the reporting period.

Section C – Bypass/Upset Requirements

1. **Definitions.**
   a. *Bypass*: the intentional diversion of waste streams from any portion of a treatment facility, except in the case of blending.
   b. *Severe Property Damage*: substantial physical damage to property, damage to the treatment facilities which causes them to become inoperable, or substantial and permanent loss of natural resources which can reasonably be expected to occur in the absence of a bypass. Severe property damage does not mean economic loss caused by delays in production.
   c. *Upset*: an exceptional incident in which there is unintentional and temporary noncompliance with technology based permit effluent limitations because of factors beyond the reasonable control of the permittee. An upset does not include noncompliance to the extent caused by operational error, improperly designed treatment facilities, inadequate treatment facilities, lack of preventive maintenance, or careless or improper operation.

2. **Bypass Requirements.**
   a. Bypass not exceeding limitations. The permittee may allow any bypass to occur which does not cause effluent limitations to be exceeded, but only if it also is for essential maintenance to assure efficient operation. These bypasses are not subject to the provisions of paragraphs 2. b. and 2. c. of this section.
   b. Notice.
      i. Anticipated bypass. If the permittee knows in advance of the need for a bypass, it shall submit prior notice, if possible at least 10 days before the date of the bypass.
      ii. Unanticipated bypass. The permittee shall submit notice of an unanticipated bypass as required in Section B – Reporting Requirements, paragraph 5 (24-hour notice).
   c. Prohibition of bypass.
      i. Bypass is prohibited, and the Department may take enforcement action against a permittee for bypass, unless:
         1. Bypass was unavoidable to prevent loss of life, personal injury, or severe property damage;
         2. There were no feasible alternatives to the bypass, such as the use of auxiliary treatment facilities, retention of untreated wastes, or maintenance during normal periods of equipment downtime. This condition is not satisfied if adequate back-up equipment should have been installed in the exercise of reasonable engineering judgment to prevent a bypass which occurred during normal periods of equipment downtime or preventive maintenance; and
         3. The permittee submitted notices as required under paragraph 2. b. of this section.
      ii. The Department may approve an anticipated bypass, after considering its adverse effects, if the Department determines that it will meet the three (3) conditions listed above in paragraph 2. c. i. of this section.

3. **Upset Requirements.**
   a. Effect of an upset. An upset constitutes an affirmative defense to an action brought for noncompliance with such technology based permit effluent limitations if the requirements of paragraph 3. b. of this section are met. No determination made during administrative review of claims that noncompliance was caused by upset, and before an action for noncompliance, is final administrative action subject to judicial review.
   b. Conditions necessary for a demonstration of upset. A permittee who wishes to establish the affirmative defense of upset shall demonstrate, through properly signed, contemporaneous operating logs, or other relevant evidence that:
      i. An upset occurred and that the permittee can identify the cause(s) of the upset;
      ii. The permitted facility was at the time being properly operated; and
      iii. The permittee submitted notice of the upset as required in Section B – Reporting Requirements, paragraph 2. b. ii. (24-hour notice).
      iv. The permittee complied with any remedial measures required under Section D – Administrative Requirements, paragraph 4.
   c. Burden of proof. In any enforcement proceeding, the permittee seeking to establish the occurrence of an upset has the burden of proof.

Section D – Administrative Requirements

1. **Duty to Comply.** The permittee must comply with all conditions of this permit. Any permit noncompliance constitutes a violation of the Missouri Clean Water Law and Federal Clean Water Act and is grounds for enforcement action; for permit termination, revocation and reissuance, or modification; or denial of a permit renewal application.
   a. The permittee shall comply with effluent standards or prohibitions established under section 307(a) of the Federal Clean Water Act for toxic pollutants and with standards for sewage sludge use or disposal established under section 405(d) of the CWA within the time provided in the regulations that establish these standards or prohibitions or standards for sewage sludge use or disposal, even if the permit has not yet been modified to incorporate the requirement.
   b. The Federal Clean Water Act provides that any person who violates section 301, 302, 306, 307, 308, 318 or 405 of the Act, or any permit condition or limitation implementing any such sections in a permit issued under section 402, or any requirement imposed in a pretreatment program approved under sections 402(a)(3) or 402(b)(8) of the Act, is subject to a civil penalty not to exceed $25,000 per day for each violation. The Federal Clean Water Act provides that any person who negligently violates sections 301, 302, 306, 307, 308, 318, or 405 of the Act, or any condition or limitation implementing any of such sections in a permit issued under section 402 of the Act, or any requirement

imposed in a pretreatment program approved under section 402(a)(3) or 402(b)(8) of the Act, is subject to criminal penalties of $2,500 to $25,000 per day of violation, or imprisonment of not more than one (1) year, or both. In the case of a second or subsequent conviction for a negligent violation, a person shall be subject to criminal penalties of not more than $50,000 per day of violation, or by imprisonment of not more than two (2) years, or both. Any person who knowingly violates such sections, or such conditions or limitations is subject to criminal penalties of $5,000 to $50,000 per day of violation, or imprisonment for not more than three (3) years, or both. In the case of a second or subsequent conviction for a knowing violation, a person shall be subject to criminal penalties of not more than $100,000 per day of violation, or imprisonment of not more than six (6) years, or both. Any person who knowingly violates section 301, 302, 303, 306, 307, 308, 318 or 405 of the Act, or any permit condition or limitation implementing any of such sections in a permit issued under section 402 of the Act, and who knows at that time that he thereby places another person in imminent danger of death or serious bodily injury, shall, upon conviction, be subject to a fine of not more than $250,000 or imprisonment of not more than 15 years, or both. In the case of a second or subsequent conviction for a knowing endangerment violation, a person shall be subject to a fine of not more than $500,000 or by imprisonment of not more than 30 years, or both. An organization, as defined in section 309(c)(3)(B)(iii) of the CWA, shall, upon conviction of violating the imminent danger provision, be subject to a fine of not more than $1,000,000 and can be fined up to $2,000,000 for second or subsequent convictions.

c. Any person may be assessed an administrative penalty by the EPA Director for violating section 301, 302, 306, 307, 308, 318 or 405 of this Act, or any permit condition or limitation implementing any of such sections in a permit issued under section 402 of this Act. Administrative penalties for Class I violations are not to exceed $10,000 per violation, with the maximum amount of any Class I penalty assessed not to exceed $25,000. Penalties for Class II violations are not to exceed $10,000 per day for each day during which the violation continues, with the maximum amount of any Class II penalty not to exceed $125,000.

d. It is unlawful for any person to cause or permit any discharge of water contaminants from any water contaminant or point source located in Missouri in violation of sections 644.006 to 644.141 of the Missouri Clean Water Law, or any standard, rule or regulation promulgated by the commission. In the event the commission or the director determines that any provision of sections 644.006 to 644.141 of the Missouri Clean Water Law or standard, rules, limitations or regulations promulgated pursuant thereto, or permits issued by, or any final abatement order, other order, or determination made by the commission or the director, or any filing requirement pursuant to sections 644.006 to 644.141 of the Missouri Clean Water Law or any other provision which this state is required to enforce pursuant to any federal water pollution control act, is being, was, or is in imminent danger of being violated, the commission or director may cause to have instituted a civil action in any court of competent jurisdiction for the injunctive relief to prevent any such violation or further violation or for the assessment of a penalty not to exceed $10,000 per day for each day, or part thereof, the violation occurred and continues to occur, or both, as the court deems proper. Any person who willfully or negligently commits any violation in this paragraph shall, upon conviction, be punished by a fine of not less than $2,500 nor more than $25,000 per day of violation, or by imprisonment for not more than one year, or both. Second and successive convictions for violation of the same provision of this paragraph by any person shall be punished by a fine of not more than $50,000 per day of violation, or by imprisonment for not more than two (2) years, or both.

2. **Duty to Reapply.**
   a. If the permittee wishes to continue an activity regulated by this permit after the expiration date of this permit, the permittee must apply for and obtain a new permit.
   b. A permittee with a currently effective site-specific permit shall submit an application for renewal at least 180 days before the expiration date of the existing permit, unless permission for a later date has been granted by the Department. (The Department shall not grant permission for applications to be submitted later than the expiration date of the existing permit.)
   c. A permittees with currently effective general permit shall submit an application for renewal at least 30 days before the existing permit expires, unless the permittee has been notified by the Department that an earlier application must be made. The Department may grant permission for a later submission date. (The Department shall not grant permission for applications to be submitted later than the expiration date of the existing permit.)

3. **Need to Halt or Reduce Activity Not a Defense.** It shall not be a defense for a permittee in an enforcement action that it would have been necessary to halt or reduce the permitted activity in order to maintain compliance with the conditions of this permit.

4. **Duty to Mitigate.** The permittee shall take all reasonable steps to minimize or prevent any discharge or sludge use or disposal in violation of this permit which has a reasonable likelihood of adversely affecting human health or the environment.

5. **Proper Operation and Maintenance**. The permittee shall at all times properly operate and maintain all facilities and systems of treatment and control (and related appurtenances) which are installed or used by the permittee to achieve compliance with the conditions of this permit. Proper operation and maintenance also includes adequate laboratory controls and appropriate quality assurance procedures. This provision requires the operation of back-up or auxiliary facilities or similar systems which are installed by a permittee only when the operation is necessary to achieve compliance with the conditions of the permit.

6. **Permit Actions.**
   a. Subject to compliance with statutory requirements of the Law and Regulations and applicable Court Order, this permit may be modified, suspended, or revoked in whole or in part during its term for cause including, but not limited to, the following:
      i. Violations of any terms or conditions of this permit or the law;
      ii. Having obtained this permit by misrepresentation or failure to disclose fully any relevant facts;
      iii. A change in any circumstances or conditions that requires either a temporary or permanent reduction or elimination of the authorized discharge; or
      iv. Any reason set forth in the Law or Regulations.
   b. The filing of a request by the permittee for a permit modification, revocation and reissuance, or termination, or a notification of planned changes or anticipated noncompliance does not stay any permit condition.

7. **Permit Transfer.**
   a. Subject to 10 CSR 20-6.010, an operating permit may be transferred upon submission to the Department of an application to transfer signed by the existing owner and the new owner, unless prohibited by the terms of the permit. Until such time the permit is officially transferred, the original permittee remains responsible for complying with the terms and conditions of the existing permit.
   b. The Department may require modification or revocation and reissuance of the permit to change the name of the permittee and incorporate such other requirements as may be necessary under the Missouri Clean Water Law or the Federal Clean Water Act.
   c. The Department, within 30 days of receipt of the application, shall notify the new permittee of its intent to revoke or reissue or transfer the permit.

8. **Toxic Pollutants.** The permittee shall comply with effluent standards or prohibitions established under section 307(a) of the Federal Clean Water Act for toxic pollutants and with standards for sewage sludge use or disposal established under section 405(d) of the Federal Clean Water Act within the time provided in the regulations that establish these standards or prohibitions or standards for sewage sludge use or disposal, even if the permit has not yet been modified to incorporate the requirement.

9. **Property Rights.** This permit does not convey any property rights of any sort, or any exclusive privilege.

10. **Duty to Provide Information.** The permittee shall furnish to the Department, within a reasonable time, any information which the Department may request to determine whether cause exists for modifying, revoking and reissuing, or terminating this permit or to determine compliance with this permit. The permittee shall also furnish to the Department upon request, copies of records required to be kept by this permit.

11. **Inspection and Entry.** The permittee shall allow the Department, or an authorized representative (including an authorized contractor acting as a representative of the Department), upon presentation of credentials and other documents as may be required by law, to:
    a. Enter upon the permittee's premises where a regulated facility or activity is located or conducted, or where records must be kept under the conditions of the permit;
    b. Have access to and copy, at reasonable times, any records that must be kept under the conditions of this permit;
    c. Inspect at reasonable times any facilities, equipment (including monitoring and control equipment), practices, or operations regulated or required under this permit; and
    d. Sample or monitor at reasonable times, for the purposes of assuring permit compliance or as otherwise authorized by the Federal Clean Water Act or Missouri Clean Water Law, any substances or parameters at any location.

12. **Closure of Treatment Facilities.**
    a. Persons who cease operation or plan to cease operation of waste, wastewater, and sludge handling and treatment facilities shall close the facilities in accordance with a closure plan approved by the Department.
    b. Operating Permits under 10 CSR 20-6.010 or under 10 CSR 20-6.015 are required until all waste, wastewater, and sludges have been disposed of in accordance with the closure plan approved by the Department and any disturbed areas have been properly stabilized. Disturbed areas will be considered stabilized when perennial vegetation, pavement, or structures using permanent materials cover all areas that have been disturbed. Vegetative cover, if used, shall be at least 70% plant density over 100% of the disturbed area.

13. **Signatory Requirement.**
    a. All permit applications, reports required by the permit, or information requested by the Department shall be signed and certified. (See 40 CFR 122.22 and 10 CSR 20-6.010)
    b. The Federal Clean Water Act provides that any person who knowingly makes any false statement, representation, or certification in any record or other document submitted or required to be maintained under this permit, including monitoring reports or reports of compliance or non-compliance shall, upon conviction, be punished by a fine of not more than $10,000 per violation, or by imprisonment for not more than six (6) months per violation, or by both.
    c. The Missouri Clean Water Law provides that any person who knowingly makes any false statement, representation or certification in any application, record, report, plan, or other document filed or required to be maintained pursuant to sections 644.006 to 644.141 shall, upon conviction, be punished by a fine of not more than ten thousand dollars, or by imprisonment for not more than six months, or by both.

14. **Severability.** The provisions of the permit are severable, and if any provision of the permit, or the application of any provision of the permit to any circumstance, is held invalid, the application of such provision to other circumstances, and the remainder of the permit, shall not be affected thereby.

STANDARD CONDITIONS FOR NPDES PERMITS
ISSUED BY
THE MISSOURI DEPARTMENT OF NATURAL RESOURCES
MISSOURI CLEAN WATER COMMISSION
REVISED
MAY 1, 2013

PART II - SPECIAL CONDITIONS – PUBLICLY OWNED TREATMENT WORKS
SECTION A – INDUSTRIAL USERS

1. Definitions

Definitions as set forth in the Missouri Clean Water Laws and approved by the Missouri Clean Water Commission shall apply to terms used herein.

Significant Industrial User (SIU). Except as provided in the *General Pretreatment Regulation* 10 CSR 20-6.100, the term Significant Industrial User means:

1. All Industrial Users subject to Categorical Pretreatment Standards; and
2. Any other Industrial User that: discharges an average of 25,000 gallons per day or more of process wastewater to the Publicly-Owned Treatment Works (POTW) (excluding sanitary, noncontact cooling and boiler blowdown wastewater); contributes a process wastestream which makes up 5 percent or more of the average dry weather hydraulic or organic capacity of the POTW treatment plant; or is designated as such by the Control Authority on the basis that the Industrial User has a reasonable potential for adversely affecting the POTW's or for violating any Pretreatment Standard or requirement.

Clean Water Act (CWA) is the the federal Clean Water Act of 1972, 33 U.S.C. § 1251 et seq. (2002).

2. Identification of Industrial Discharges

Pursuant to 40 CFR 122.44(j)(1), all POTWs shall identify, in terms of character and volume of pollutants, any Significant Industrial Users discharging to the POTW subject to Pretreatment Standards under section 307(b) of the CWA and 40 CFR 403.

3. Application Information

Applications for renewal or modification of this permit must contain the information about industrial discharges to the POTW pursuant to 40 CFR 122.21(j)(6)

4. Notice to the Department

Pursuant to 40 CFR 122.42(b), all POTWs must provide adequate notice of the following:

1. Any new introduction of pollutants into the POTW from an indirect discharger which would be subject to section 301 or 306 of CWA if it were directly discharging these pollutants; and
2. Any substantial change into the volume or character of pollutants being introduced into that POTW by a source introducing pollutants into the POTW at the time of issuance of the permit.
3. For purposes of this paragraph, adequate notice shall include information on:
   i. the quality and quantity of effluent introduced into the POTW, and
   ii. any anticipated impact of the change on the quantity or quality of effluent to be discharged from the POTW.

For POTWs without an approved pretreatment program, the notice of industrial discharges which was not included in the permit application shall be made as soon as practicable. For POTWs with an approved pretreatment program, notice is to be included in the annual pretreatment report required in the special conditions of this permit. Notice may be sent to:

Missouri Department of Natural Resources
Water Protection Program
Attn: Pretreatment Coordinator
P.O. Box 176
Jefferson City, MO 65102

STANDARD CONDITIONS FOR NPDES PERMITS
ISSUED BY
THE MISSOURI DEPARTMENT OF NATURAL RESOURCES
MISSOURI CLEAN WATER COMMISSION
March 1, 2015

PART III – SLUDGE AND BIOSOLIDS FROM DOMESTIC AND INDUSTRIAL WASTEWATER TREATMENT FACILITIES

SECTION A – GENERAL REQUIREMENTS

1. This permit pertains to sludge requirements under the Missouri Clean Water Law and regulation for domestic wastewater and industrial process wastewater. This permit also incorporates applicable federal sludge disposal requirements under 40 CFR 503 for domestic wastewater. The Environmental Protection Agency (EPA) has principal authority for permitting and enforcement of the federal sludge regulations under 40 CFR 503 for domestic wastewater. EPA has reviewed and accepted these standard sludge conditions. EPA may choose to issue a separate sludge addendum to this permit or a separate federal sludge permit at their discretion to further address the federal requirements.
2. These PART III Standard Conditions apply only to sludge and biosolids generated at domestic wastewater treatment facilities, including public owned treatment works (POTW), privately owned facilities and sludge or biosolids generated at industrial facilities.
3. Sludge and Biosolids Use and Disposal Practices:
    a. The permittee is authorized to operate the sludge and biosolids treatment, storage, use, and disposal facilities listed in the facility description of this permit.
    b. The permittee shall not exceed the design sludge volume listed in the facility description and shall not use sludge disposal methods that are not listed in the facility description, without prior approval of the permitting authority.
    c. The permittee is authorized to operate the storage, treatment or generating sites listed in the Facility Description section of this permit.
4. Sludge Received from other Facilities:
    a. Permittees may accept domestic wastewater sludge from other facilities including septic tank pumpings from residential sources as long as the design sludge volume is not exceeded and the treatment facility performance is not impaired.
    b. The permittee shall obtain a signed statement from the sludge generator or hauler that certifies the type and source of the sludge
5. These permit requirements do not supersede nor remove liability for compliance with county and other local ordinances.
6. These permit requirements do not supersede nor remove liability for compliance with other environmental regulations such as odor emissions under the Missouri Air Pollution Control Law and regulations.
7. This permit may (after due process) be modified, or alternatively revoked and reissued, to comply with any applicable sludge disposal standard or limitation issued or approved under Section 405(d) of the Clean Water Actor under Chapter 644 RSMo.
8. In addition to STANDARD CONDITIONS, the Department may include sludge limitations in the special conditions portion or other sections of a site specific permit.
9. Alternate Limits in the Site Specific Permit.
   Where deemed appropriate, the Department may require an individual site specific permit in order to authorize alternate limitations:
    a. A site specific permit must be obtained for each operating location, including application sites.
    b. To request a site specific permit, an individual permit application, permit fee, and supporting documents shall be submitted for each operating location. This shall include a detailed sludge/biosolids management plan or engineering report.
10. Exceptions to these Standard Conditions may be authorized on a case-by-case basis by the Department, as follows:
    a. The Department will prepare a permit modification and follow permit notice provisions as applicable under 10 CSR 20-6.020, 40 CFR 124.10, and 40 CFR 501.15(a)(2)(ix)(E). This includes notification of the owner of the property located adjacent to each land application site, where appropriate.
    b. Exceptions cannot be granted where prohibited by the federal sludge regulations under 40 CFR 503.

SECTION B – DEFINITIONS

1. Best Management Practices include agronomic loading rates, soil conservation practices and other site restrictions.
2. Biosolids means organic fertilizer or soil amendment produced by the treatment of domestic wastewater sludge.
3. Biosolids land application facility is a facility where biosolids are spread onto the land at agronomic rates for production of food or fiber. The facility includes any structures necessary to store the biosolids until soil, weather, and crop conditions are favorable for land application.
4. Class A biosolids means a material that has met the Class A pathogen reduction requirements or equivalent treatment by a Process to Further Reduce Pathogens (PFRP) in accordance with 40 CFR 503.
5. Class B biosolids means a material that has met the Class B pathogen reduction requirements or equivalent treatment by a Process to Significantly Reduce Pathogens (PFRP) in accordance with 40 CFR 503.
6. Domestic wastewater means wastewater originating from the sanitary conveniences of residences, commercial buildings, factories and institutions; or co-mingled sanitary and industrial wastewater processed by a (POTW) or a privately owned facility.
7. Industrial wastewater means any wastewater, also known as process water, not defined as domestic wastewater. Per 40 CFR Part 122, process water means any water which, during manufacturing or processing, comes into direct contact with or results from the production or use of any raw material, intermediate product, finished product, byproduct, or waste product.
8. Mechanical treatment plants are wastewater treatment facilities that use mechanical devices to treat wastewater, including septic tanks, sand filters, extended aeration, activated sludge, contact stabilization, trickling filters, rotating biological discs, and other similar facilities. It does not include wastewater treatment lagoons and constructed wetlands for wastewater treatment.
9. Operating location as defined in 10 CSR 20-2.010 is all contiguous lands owned, operated or controlled by one (1) person or by two (2) or more persons jointly or as tenants in common.
10. Plant Available Nitrogen (PAN) is the nitrogen that will be available to plants during the growing seasons after biosolids application.
11. Public contact site is land with a high potential for contact by the public. This includes, but is not limited to, public parks, ball fields, cemeteries, plant nurseries, turf farms, and golf courses.
12. Sludge is the solid, semisolid, or liquid residue removed during the treatment of wastewater. Sludge includes septage removed from septic tanks or equivalent facilities. Sludge does not include carbon coal byproducts (CCBs)
13. Sludge lagoon is part of a mechanical wastewater treatment facility. A sludge lagoon is an earthen basin that receives sludge that has been removed from a wastewater treatment facility. It does not include a wastewater treatment lagoon or sludge treatment units that are not a part of a mechanical wastewater treatment facility.
14. Septage is the material pumped from residential septic tanks and similar treatment works (with a design population of less than 150 people). The standard for biosolids from septage is different from other sludges.

SECTION C – MECHANICAL WASTEWATER TREATMENT FACILITIES

1. Sludge shall be routinely removed from wastewater treatment facilities and handled according to the permit facility description and sludge conditions of this permit.
2. The permittee shall operate the facility so that there is no sludge discharged to waters of the state.
3. Mechanical treatment plants shall have separate sludge storage compartments in accordance with 10 CSR 20, Chapter 8. Failure to remove sludge from these storage compartments on the required design schedule is a violation of this permit.

SECTION D – SLUDGE DISPOSED AT OTHER TREATMENT FACILITY OR CONTRACT HAULER

1. This section applies to permittees that haul sludge to another treatment facility for disposal or use contract haulers to remove and dispose of sludge.
2. Permittees that use contract haulers are responsible for compliance with all the terms of this permit including final disposal, unless the hauler has a separate permit for sludge or biosolids disposal issued by the Department; or the hauler transports the sludge to another permitted treatment facility.
3. Haulers who land apply septage must obtain a state permit.
4. Testing of sludge, other than total solids content, is not required if sludge is hauled to a municipal wastewater treatment facility or other permitted wastewater treatment facility, unless it is required by the accepting facility.

SECTION E – INCINERATION OF SLUDGE

1. Sludge incineration facilities shall comply with the requirements of 40 CFR 503 Subpart E; air pollution control regulations under 10 CSR 10; and solid waste management regulations under 10 CSR 80.
2. Permittee may be authorized under the facility description of this permit to store incineration ash in lagoons or ash ponds. This permit does not authorize the disposal of incineration ash. Incineration ash shall be disposed in accordance with 10 CSR 80; or if the ash is determined to be hazardous with 10 CSR 25.
3. In addition to normal sludge monitoring, incineration facilities shall report the following as part of the annual report, quantity of sludge incinerated, quantity of ash generated, quantity of ash stored, and ash used or disposal method, quantity, and location. Permittee shall also provide the name of the disposal facility and the applicable permit number.

SECTION F – SURFACE DISPOSAL SITES AND SLUDGE LAGOONS

1. Surface disposal sites of domestic facilities shall comply with the requirements in 40 CFR 503 Subpart C; air pollution control regulations under 10 CSR 10; and solid waste management regulations under 10 CSR 80.
2. Sludge storage lagoons are temporary facilities and are not required to obtain a permit as a solid waste management facility under 10 CSR 80. In order to maintain sludge storage lagoons as storage facilities, accumulated sludge must be removed routinely, but not less than once every two years unless an alternate schedule is approved in the permit. The amount of sludge removed will be dependent on sludge generation and accumulation in the facility. Enough sludge must be removed to maintain adequate storage capacity in the facility.
    a. In order to avoid damage to the lagoon seal during cleaning, the permittee may leave a layer of sludge on the bottom of the lagoon, upon prior approval of the Department; or
    b. Permittee shall close the lagoon in accordance with Section H.

SECTION G – LAND APPLICATION

1. The permittee shall not land apply sludge or biosolids unless land application is authorized in the facility description or the special conditions of the issued NPDES permit.
2. Land application sites within a 20 miles radius of the wastewater treatment facility are authorized under this permit when biosolids are applied for beneficial use in accordance with these standard conditions unless otherwise specified in a site specific permit. If the permittee's land application site is greater than a 20 mile radius of the wastewater treatment facility, approval must be granted from the Department.
3. Land application shall not adversely affect a threatened or endangered species or its designated critical habitat.
4. Biosolids shall not be applied unless authorized in this permit or exempted under 10 CSR 20, Chapter 6.
    a. This permit does not authorize the land application of domestic sludge except for when sludge meets the definition of biosolids.
    b. This permit authorizes "Class A or B" biosolids derived from domestic wastewater and/or process water sludge to be land applied onto grass land, crop land, timber or other similar agricultural or silviculture lands at rates suitable for beneficial use as organic fertilizer and soil conditioner.
5. Public Contact Sites:

    Permittees who wish to apply Class A biosolids to public contact sites must obtain approval from the Department after two years of proper operation with acceptable testing documentation that shows the biosolids meet Class A criteria. A shorter length of testing will be allowed with prior approval from the Department. Authorization for land applications must be provided in the special conditions section of this permit or in a separate site specific permit.
    a. After Class B biosolids have been land applied, public access must be restricted for 12 months.
    b. Class B biosolids are only land applied to root crops, home gardens or vegetable crops whose edible parts will not be for human consumption.
6. Agricultural and Silvicultural Sites:

    Septage – Based on Water Quality guide 422 (WQ422) published by the University of Missouri
    a. Haulers that land apply septage must obtain a state permit
    b. Do not apply more than 30,000 gallons of septage per acre per year.
    c. Septage tanks are designed to retain sludge for one to three years which will allow for a larger reduction in pathogens and vectors, as compared to other mechanical type treatment facilities.
    d. To meet Class B sludge requirements, maintain septage at 12 pH for at least thirty (30) minutes before land application. 50 pounds of hydrated lime shall be added to each 1,000 gallons of septage in order to meet pathogen and vector stabilization for septage biosolids applied to crops, pastures or timberland.
    e. Lime is to be added to the pump truck and not directly to the septic tanks, as lime would harm the beneficial bacteria of the septic tank.

Biosolids - Based on Water Quality guide 423, 424, and 425 (WQ423, WQ424, WQ425) published by the University of Missouri;

a. Biosolids shall be monitored to determine the quality for regulated pollutants

b. The number of samples taken is directly related to the amount of sludge produced by the facility (See Section I of these Standard Conditions). Report as dry weight unless otherwise specified in the site specific permit. Samples should be taken only during land application periods. When necessary, it is permissible to mix biosolids with lower concentrations of biosolids as well as other suitable Department approved material to reach the maximum concentration of pollutants allowed.

c. Table 1 gives the maximum concentration allowable to protect water quality standards

TABLE 1

Biosolids ceiling concentration [1]	
Pollutant	Milligrams per kilogram dry weight
Arsenic	75
Cadmium	85
Copper	4,300
Lead	840
Mercury	57
Molybdenum	75
Nickel	420
Selenium	100
Zinc	7,500

[1] Land application is not allowed if the sludge concentration exceeds the maximum limits for any of these pollutants

d. The low metal concentration biosolids has reduced requirements because of its higher quality and can safely be applied for 100 years or longer at typical agronomic loading rates. (See Table 2)

TABLE 2

Biosolids Low Metal Concentration [1]	
Pollutant	Milligrams per kilogram dry weight
Arsenic	41
Cadmium	39
Copper	1,500
Lead	300
Mercury	17
Nickel	420
Selenium	36
Zinc	2,800

[1] You may apply low metal biosolids without tracking cumulative metal limits, provided the cumulative application of biosolids does not exceed 500 dry tons per acre.

e. Each pollutant in Table 3 has an annual and a total cumulative loading limit, based on the allowable pounds per acre for various soil categories.

TABLE 3

Pollutant	CEC 15+		CEC 5 to 15		CEC 0 to 5	
	Annual	Total [1]	Annual	Total [1]	Annual	Total [1]
Arsenic	1.8	36.0	1.8	36.0	1.8	36.0
Cadmium	1.7	35.0	0.9	9.0	0.4	4.5
Copper	66.0	1,335.0	25.0	250.0	12.0	125.0
Lead	13.0	267.0	13.0	267.0	13.0	133.0
Mercury	0.7	15.0	0.7	15.0	0.7	15.0
Nickel	19.0	347.0	19.0	250.0	12.0	125.0
Selenium	4.5	89.0	4.5	44.0	1.6	16.0
Zinc	124.0	2,492.0	50.0	500.0	25.0	250.0

[1] Total cumulative loading limits for soils with equal or greater than 6.0 pH (salt based test) or 6.5 pH (water based test)

TABLE 4 - Guidelines for land application of other trace substances [1]

Cumulative Loading	
Pollutant	Pounds per acre
Aluminum	4,000[2]
Beryllium	100
Cobalt	50
Fluoride	800
Manganese	500
Silver	200
Tin	1,000
Dioxin	(10 ppt in soil)[3]
Other	[4]

[1] Design of land treatment systems for Industrial Waste, 1979. Michael Ray Overcash, North Carolina State University and Land Treatment of Municipal Wastewater, EPA 1981.)

[2] This applies for a soil with a pH between 6.0 and 7.0 (salt based test) or a pH between 6.5 to 7.5 (water based test). Case-by-case review is required for higher pH soils.

[3] Total Dioxin Toxicity Equivalents (TEQ) in soils, based on a risk assessment under 40 CFR 744, May 1998.

[4] Case by case review. Concentrations in sludge should not exceed the 95th percentile of the National Sewage Sludge Survey, EPA, January 2009.

Best Management Practices – Based on Water Quality guide 426 (WQ426) published by the University of Missouri

a. Use best management practices when applying biosolids.
b. Biosolids cannot discharge from the land application site
c. Biosolid application is subject to the Missouri Department of Agriculture State Milk Board concerning grazing restrictions of lactating dairy cattle.
d. Biosolid application must be in accordance with section 4 of the Endangered Species Act.
e. Do not apply more than the agronomic rate of nitrogen needed.
f. The applicator must document the Plant Available Nitrogen (PAN) loadings, available nitrogen in the soil, and crop removal when either of the following occurs: 1) When biosolids are greater than 50,000 mg/kg TN; or 2) When biosolids are land applied at an application rate greater than two dry tons per acre per year.
    i. PAN can be determined as follows and is in accordance with WQ426
    (Nitrate + nitrite nitrogen) + (organic nitrogen x 0.2) + (ammonia nitrogen x volatilization factor[1]).
    [1] Volatilization factor is 0.7 for surface application and 1 for subsurface application.
g. Buffer zones are as follows:
    i. 300 feet of a water supply well, sinkhole, lake, pond, water supply reservoir or water supply intake in a stream;
    ii. 300 feet of a losing stream, no discharge stream, stream stretches designated for whole body contact recreation, wild and scenic rivers, Ozark National Scenic Riverways or outstanding state resource waters as listed in the Water Quality Standards, 10 CSR 20-7.031;
    iii. 150 feet if dwellings;
    iv. 100 feet of wetlands or permanent flowing streams;
    v. 50 feet of a property line or other waters of the state, including intermittent flowing streams.
h. Slope limitation for application sites are as follows;
    i. A slope 0 to 6 percent has no rate limitation
    ii. Applied to a slope 7 to 12 percent, the applicator may apply biosolids when soil conservation practices are used to meet the minimum erosion levels
    iii. Slopes > 12 percent, apply biosolids only when grass is vegetated and maintained with at least 80 percent ground cover at a rate of two dry tons per acre per year or less.
i. No biosolids may be land applied in an area that it is reasonably certain that pollutants will be transported into waters of the state.
j. Do not apply biosolids to sites with soil that is snow covered, frozen or saturated with liquid without prior approval by the Department.
k. Biosolids / sludge applicators must keep detailed records up to five years.

SECTION H – CLOSURE REQUIREMENTS

1. This section applies to all wastewater facilities (mechanical, industrial, and lagoons) and sludge or biosolids storage and treatment facilities and incineration ash ponds. It does not apply to land application sites.
2. Permittees of a domestic wastewater facility who plan to cease operation must obtain Department approval of a closure plan which addresses proper removal and disposal of all residues, including sludge, biosolids. Mechanical plants, sludge lagoons, ash ponds and other storage structures must obtain approval of a closure plan from the Department. Permittee must maintain this permit until the facility is closed in accordance with the approved closure plan per 10 CSR 20 – 6. 010 and 10 CSR 20 – 6.015.
3. Residuals that are left in place during closure of a lagoon or earthen structure or ash pond shall not exceed the agricultural loading rates as follows:
    a. Residuals shall meet the monitoring and land application limits for agricultural rates as referenced in Section H of these standard conditions.
    b. If a wastewater treatment lagoon has been in operation for 15 years or more without sludge removal, the sludge in the lagoon qualifies as a Class B biosolids with respect to pathogens due to anaerobic digestion, and testing for fecal coliform is not required. For other lagoons, testing for fecal coliform is required to show compliance with Class B biosolids limitations. In order to reach Class B biosolids requirements, fecal coliform must be less than 2,000,000 colony forming units or 2,000,000 most probable number. All fecal samples must be presented as geometric mean per gram.
    c. The allowable nitrogen loading that may be left in the lagoon shall be based on the plant available nitrogen (PAN) loading. For a grass cover crop, the allowable PAN is 300 pounds/acre.
        i. PAN can be determined as follows:

        (Nitrate + nitrite nitrogen) + (organic nitrogen x 0.2) + (ammonia nitrogen x volatilization factor[1]).

        [1] Volatilization factor is 0.7 for surface application and 1 for subsurface application.
4. When closing a domestic wastewater treatment lagoon with a design treatment capacity equal or less than 150 persons, the residuals are considered "septage" under the similar treatment works definition. See Section B of these standard conditions. Under the septage category, residuals may be left in place as follows:
    a. Testing for metals or fecal coliform is not required
    b. If the wastewater treatment lagoon has been in use for less than 15 years, mix lime with the sludge at a rate of 50 pounds of hydrated lime per 1000 gallons (134 cubic feet) of sludge.
    c. The amount of sludge that may be left in the lagoon shall be based on the plant available nitrogen (PAN) loading. 100 dry tons/acre of sludge may be left in the basin without testing for nitrogen. If 100 dry tons/acre or more will be left in the lagoon, test for nitrogen and determine the PAN using the calculation above. Allowable PAN loading is 300 pounds/acre.
5. Residuals left within the domestic lagoon shall be mixed with soil on at least a 1 to 1 ratio, the lagoon berm shall be demolished, and the site shall be graded and contain ≥70% vegetative density over 100% of the site so as to avoid ponding of storm water and provide adequate surface water drainage without creating erosion.
6. Lagoons and/or earthen structure and/or ash pond closure activities shall obtain a storm water permit for land disturbance activities that equal or exceed one acre in accordance with 10 CSR 20-6.200
7. When closing a mechanical wastewater and/or industrial process wastewater plant; all sludge must be cleaned out and disposed of in accordance with the Department approved closure plan before the permit for the facility can be terminated.
    a. Land must be stabilized which includes any grading, alternate use or fate upon approval by the Department, remediation, or other work that exposes sediment to stormwater per 10 CSR 20-6.200. The site shall be graded and contain ≥70% vegetative density over 100% of the site, so as to avoid ponding of storm water and provide adequate surface water drainage without creating erosion.
    b. Per 10 CSR 20-6.015(4)(B)6, Hazardous Waste shall not be land applied or disposed during industrial and mechanical plant closures unless in accordance with Missouri Hazardous Waste Management Law and Regulations under 10 CSR 25.
    c. After demolition of the mechanical plant / industrial plant, the site must only contain clean fill defined in RSMo 260.200 (5) as uncontaminated soil, rock, sand, gravel, concrete, asphaltic concrete, cinderblocks, brick, minimal amounts of wood and metal, and inert solids as approved by rule or policy of the Department for fill or other beneficial use. Other solid wastes must be removed.
8. If sludge from the domestic lagoon or mechanical treatment plant exceeds agricultural rates under Section G and/or H, a landfill permit or solid waste disposal permit must be obtained if the permittee chooses to seek authorization for on-site sludge disposal under the Missouri Solid Waste Management Law and regulations per 10 CSR 80, and the permittee must comply with the surface disposal requirements under 40 CFR 503, Subpart C.

SECTION I – MONITORING FREQUENCY

1. At a minimum, sludge or biosolids shall be tested for volume and percent total solids on a frequency that will accurately represent sludge quantities produced and disposed. Please see the table below.

TABLE 5

Design Sludge Production (dry tons per year)	Monitoring Frequency (See Notes 1, 2, and 3)			
	Metals, Pathogens and Vectors	Nitrogen TKN [1]	Nitrogen PAN [2]	Priority Pollutants and TCLP [3]
0 to 100	1 per year	1 per year	1 per month	1 per year
101 to 200	biannual	biannual	1 per month	1 per year
201 to 1,000	quarterly	quarterly	1 per month	1 per year
1,001 to 10,000	1 per month	1 per month	1 per week	--[4]
10,001 +	1 per week	1 per week	1 per day	--[4]

[1] Test total Kjeldahl nitrogen, if biosolids application is 2 dry tons per acre per year or less.
[2] Calculate plant available nitrogen (PAN) when either of the following occurs: 1) when biosolids are greater than 50,000 mg/kg TN; or 2) when biosolids are land applied at an application rate greater than two dry tons per acre per year.
[3] Priority pollutants (40 CFR 122.21, Appendix D, Tables II and III) and toxicity characteristic leaching procedure (40 CFR 261.24) is required only for permit holders that must have a pre-treatment program.
[4] One sample for each 1,000 dry tons of sludge.

Note 1: Total solids: A grab sample of sludge shall be tested one per day during land application periods for percent total solids. This data shall be used to calculate the dry tons of sludge applied per acre.
Note 2: Total Phosphorus: Total phosphorus and total potassium shall be tested at the same monitoring frequency as metals.
Note 3: Table 5 is not applicable for incineration and permit holders that landfill their sludge.

2. If you own a wastewater treatment lagoon or sludge lagoon that is cleaned out once a year or less, you may choose to sample only when the sludge is removed or the lagoon is closed. Test one composite sample for each 100 dry tons of sludge or biosolids removed from the lagoon during the year within the lagoon at closing. Composite sample must represent various areas at one-foot depth.
3. Additional testing may be required in the special conditions or other sections of the permit. Permittees receiving industrial wastewater may be required to conduct additional testing upon request from the Department.
4. At this time, the Department recommends monitoring requirements shall be performed in accordance with, "POTW Sludge Sampling and Analysis Guidance Document," United States Environmental Protection Agency, August 1989, and the subsequent revisions.

SECTION J – RECORD KEEPING AND REPORTING REQUIREMENTS

1. The permittee shall maintain records on file at the facility for at least five years for the items listed in these standard conditions and any additional items in the Special Conditions section of this permit. This shall include dates when the sludge facility is checked for proper operation, records of maintenance and repairs and other relevant information.
2. Reporting period
   a. By January 28th of each year, an annual report shall be submitted for the previous calendar year period for all mechanical wastewater treatment facilities, sludge lagoons, and sludge or biosolids disposal facilities.
   b. Permittees with wastewater treatment lagoons shall submit the above annual report only when sludge or biosolids are removed from the lagoon during the report period or when the lagoon is closed.
3. Report Forms. The annual report shall be submitted on report forms provided by the Department or equivalent forms approved by the Department.
4. Reports shall be submitted as follows:

   Major facilities (those serving 10,000 persons or 1 million gallons per day) shall report to both the Department and EPA. Other facilities need to report only to the Department. Reports shall be submitted to the addresses listed as follows:

   DNR regional office listed in your permit
   (see cover letter of permit)
   ATTN: Sludge Coordinator

   EPA Region VII
   Water Compliance Branch (WACM)
   Sludge Coordinator
   11201 Renner Blvd.
   Lenexa, KS 66219

5. Annual report contents. The annual report shall include the following:
    a. Sludge and biosolids testing performed. Include a copy or summary of all test results, even if not required by the permit.
    b. Sludge or biosolids quantity shall be reported as dry tons for quantity generated by the wastewater treatment facility, the quantity stored on site at the end of the year, and the quantity used or disposed.
    c. Gallons and % solids data used to calculate the dry ton amounts.
    d. Description of any unusual operating conditions.
    e. Final disposal method, dates, and location, and person responsible for hauling and disposal.
        i. This must include the name, address for the hauler and sludge facility. If hauled to a municipal wastewater treatment facility, sanitary landfill, or other approved treatment facility, give the name of that facility.
        ii. Include a description of the type of hauling equipment used and the capacity in tons, gallons, or cubic feet.
    f. Contract Hauler Activities:
    If contract hauler, provide a copy of a signed contract from the contractor. Permittee shall require the contractor to supply information required under this permit for which the contractor is responsible. The permittee shall submit a signed statement from the contractor that he has complied with the standards contained in this permit, unless the contract hauler has a separate sludge or biosolids use permit.
    g. Land Application Sites:
        i. Report the location of each application site, the annual and cumulative dry tons/acre for each site, and the landowners name and address. The location for each spreading site shall be given as a legal description for nearest ¼, ¼, Section, Township, Range, and county, or UTM coordinates. The facility shall report PAN when either of the following occurs: 1) When biosolids are greater than 50,000 mg/kg TN; or 2) when biosolids are land applied at an application rate greater than two dry tons per acre per year.
        ii. If the “Low Metals” criteria are exceeded, report the annual and cumulative pollutant loading rates in pounds per acre for each applicable pollutant, and report the percent of cumulative pollutant loading which has been reached at each site.
        iii. Report the method used for compliance with pathogen and vector attraction requirements.
        iv. Report soil test results for pH, CEC, and phosphorus. If none was tested during the year, report the last date when tested and results.

RECEIVED

FEB 19 2015

WATER PROTECTION PROGRAM

MISSOURI DEPARTMENT OF NATURAL RESOURCES
WATER PROTECTION PROGRAM, WATER POLLUTION CONTROL BRANCH

FORM B2 – APPLICATION FOR OPERATING PERMIT FOR FACILITIES THAT RECEIVE PRIMARILY DOMESTIC WASTE AND HAVE A DESIGN FLOW MORE THAN 100,000 GALLONS PER DAY

FACILITY NAME	
Ava WWTP	
PERMIT NO.	COUNTY
MO-0056260	DOUGLAS

APPLICATION OVERVIEW

Form B2 has been developed in a modular format and consists of Parts A, B and C and a Supplemental Application Information (Parts D, E, F and G) packet. All applicants must complete Parts A, B and C. Some applicants must also complete parts of the Supplemental Application Information packet. The following items explain which parts of Form B2 you must complete. Submittal of an incomplete application may result in the application being returned.

BASIC APPLICATION INFORMATION

A. Basic Application Information for all Applicants. All applicants must complete Part A.

B. Additional Application Information for all Applicants. All applicants must complete Part B.

C. Certification. All applicants must complete Part C.

SUPPLEMENTAL APPLICATION INFORMATION

D. Expanded Effluent Testing Data. A treatment works that discharges effluent to surface water of the United States and meets one or more of the following criteria must complete *Part D - Expanded Effluent Testing Data*:

1. Has a design flow rate greater than or equal to 1 million gallons per day.
2. Is required to have or currently has a pretreatment program.
3. Is otherwise required by the permitting authority to provide the information.

E. Toxicity Testing Data. A treatment works that meets one or more of the following criteria must complete *Part E - Toxicity Testing Data*:

1. Has a design flow rate greater than or equal to 1 million gallons per day.
2. Is required to have or currently has a pretreatment program.
3. Is otherwise required by the permitting authority to provide the information.

F. Industrial User Discharges and Resource Conservation and Recovery Act / Comprehensive Environmental Response, Compensation and Liability Act Wastes. A treatment works that accepts process wastewater from any significant industrial users, also known as SIUs, or receives a Resource Conservation and Recovery Act or CERCLA wastes must complete *Part F - Industrial User Discharges and Resource Conservation and Recovery Act /CERCLA Wastes.*

SIUs are defined as:

1. All Categorical Industrial Users, or CIUs, subject to Categorical Pretreatment Standards under 40 Code of Federal Regulations 403.6 and 40 Code of Federal Regulations 403.6 and 40 CFR Chapter 1, Subchapter N.
2. Any other industrial user that meets one or more of the following:
   - i. Discharges an average of 25,000 gallons per day or more of process wastewater to the treatment works (with certain exclusions).
   - ii. Contributes a process waste stream that makes up five percent or more of the average dry weather hydraulic or organic capacity of the treatment plant.
   - iii. Is designated as an SIU by the control authority.
   - iv. Is otherwise required by the permitting authority to provide the information.

G. Combined Sewer Systems. A treatment works that has a combined sewer system must complete *Part G - Combined Sewer Systems.*

ALL APPLICANTS MUST COMPLETE PARTS A, B and C

AP 20718

MISSOURI DEPARTMENT OF NATURAL RESOURCES
WATER PROTECTION PROGRAM, WATER POLLUTION CONTROL BRANCH

FORM B2 – APPLICATION FOR AN OPERATING PERMIT FOR FACILITIES THAT RECEIVE PRIMARILY DOMESTIC WASTE AND HAVE A DESIGN FLOW MORE THAN 100,000 GALLONS PER DAY

FOR AGENCY USE ONLY	
CHECK NUMBER	
DATE RECEIVED 2/19/15	FEE SUBMITTED

PART A – BASIC APPLICATION INFORMATION

1. THIS APPLICATION IS FOR:

☐ An operating permit for a new or unpermitted facility. Construction Permit # _____
(Please include completed Antidegradation Review or request to conduct an Antidegradation Review, see instructions)

☑ An operating permit renewal: Permit #MO- 0056260 Expiration Date 10/19/2015

☐ An operating permit modification: Permit #MO-_____ Reason: _____

1.1 Is the appropriate fee included with the application (see instructions for appropriate fee)? ☐ YES ☑ NO

2. FACILITY

NAME		TELEPHONE NUMBER WITH AREA CODE	
Ava WWTP		417-683-4370	
ADDRESS (PHYSICAL)	CITY	STATE	ZIP
506 COUNTY ROAD	AVA	MO	65608

2.1 **LEGAL DESCRIPTION** (Facility Site): sw ¼, ne ¼, ¼, Sec. 15 , T 26n , R 16w COUNTY DOUGLAS

2.2 UTM Coordinates Easting (X): 52866 Northing (Y): 4088911
For Universal Transverse Mercator (UTM), Zone 15 North referenced to North American Datum 1983 (NAD83)

2.3 Name of receiving stream: Prairie Creek

2.4 Number of Outfalls: 1 wastewater outfalls, stormwater outfalls, instream monitoring sites

3. OWNER

NAME	E-MAIL ADDRESS	TELEPHONE NUMBER WITH AREA CODE	
City Of Ava	wwtp@avamissouri.org	417-683-5516	
ADDRESS	CITY	STATE	ZIP
127 SW AVE, P.O. BOX 967	AVA	MO	65608

3.1 Request review of draft permit prior to Public Notice? ☑ YES ☐ NO

3.2 Are you a Publically Owned Treatment Works (POTW)? ☑ YES ☐ NO

3.3 Are you a Privately Owned Treatment Facility? ☐ YES ☑ NO

3.4 Are you a Privately Owned Treatment Facility regulated by the Public Service Commission (PSC)? ☐ YES ☑ NO

4. CONTINUING AUTHORITY: Permanent organization which will serve as the continuing authority for the operation, maintenance and modernization of the facility.

NAME	EMAIL ADDRESS	TELEPHONE WITH AREA CODE	
CITY OF AVA	avamissouri.org	417-683-5516	
ADDRESS	CITY	STATE	ZIP
P.O. BOX 967	AVA	MO	65608

If the Continuing Authority is different than the Owner, please include a copy of the contract agreement between the two parties and a description of the responsibilities of both parties within the agreement.

5. OPERATOR

NAME	TITLE	CERTIFICATE NUMBER (IF APPLICABLE)
Steve Davis	Manager	5295
E-MAIL ADDRESS	TELEPHONE NUMBER WITH AREA CODE	
wwtp@avamissouri.org	417-683-4370	

6. FACILITY CONTACT

NAME	TITLE		
David Norman	Mayor		
E-MAIL ADDRESS	TELEPHONE NUMBER WITH AREA CODE		
dnorman@avamissouri.org	417-683-8067		
ADDRESS	CITY	STATE	ZIP CODE
P.O. BOX 967	Ava	MO	65608

Douglas/SWRO

FACILITY NAME	PERMIT NO.	OUTFALL NO.
AVA WWTP	MO- 0056260	001

PART A – BASIC APPLICATION INFORMATION

7. FACILITY INFORMATION

7.1 Process Flow Diagram or Schematic. Provide a diagram showing the processes of the treatment plant. Show all of the treatment units, including disinfection (e.g. – Chlorination and Dechlorination), influents, and outfalls. Indicate any treatment process changes in the routing of wastewater during dry weather and peak wet weather. Include a brief narrative description of the diagram. Attach sheets as necessary.

Ava WWTP HAS A DESIGN FLOW OF 0.75 MGD & CONSISTS OF THE FOLLOWING UNIT PROCESSES: STORM WATER LAGOON, INFLUENT PUMP STATION SELECTOR BASIN OXIDATION DITCH, 3 CLARIFIERS,3 TRAVELING BRIDGE SAND FILTERS, ULTRAVIOLET DISINFECTION, AND 2 AERATED DIGESTERS.
ATTACHED IS A MAP OVERVIEW OF THE TREATMENT PLANT.

FACILITY NAME	PERMIT NO.	OUTFALL NO.
AVA WWTP	MO- 0056260	001

PART A – BASIC APPLICATION INFORMATION

7. FACILITY INFORMATION (continued)

7.2 Topographic Map. Attach to this application a topographic map of the area extending at least one mile beyond facility property boundaries. This map must show the outline of the facility and the following information.

a. The area surrounding the treatment plant, including all unit processes.
b. The location of the downstream landowner(s). (See Item 10.)
c. The major pipes or other structures through which wastewater enters the treatment works and the pipes or other structures through which treated wastewater is discharged from the treatment plant. Include outfalls from bypass piping, if applicable.
d. The actual point of discharge.
e. Wells, springs, other surface water bodies and drinking water wells that are: 1) within ¼ mile of the property boundaries of the treatment works, and 2) listed in public record or otherwise known to the applicant.
f. Any areas where the sewage sludge produced by the treatment works is stored, treated, or disposed.
g. If the treatment works receives waste that is classified as hazardous under the Resource Conservation and Recovery Act (RCRA) by truck, rail, or special pipe, show on the map where that hazardous waste enters the treatment works and where it is treated, stored, or disposed.

7.3 Facility SIC Code: 4952 | Discharge SIC Code: 4952

7.4 Number of people presently connected or population equivalent (P.E.): 2993 Design P.E. 4733

7.5 Connections to the facility:

Number of units presently connected:

Homes 1036 Trailers 56 Apartments 8 Other (including industrial) 1

Number of Commercial Establishments: 227

7.6 Design Flow 0.75MGD | Actual Flow 0.515 MGD

7.7 Will discharge be continuous through the year? Yes ■ No ☐

Discharge will occur during the following months: 12 How many days of the week will discharge occur? 7

7.8 Is industrial waste discharged to the facility? Yes ■ No ☐

If yes, please describe the number and types of industries that discharge to your facility.

EMERSON CLIMATE TECHNOLOGIES.THEY BUILD AIR CONDITIONER COMPRESSERS

Refer to the APPLICATION OVERVIEW to determine whether additional information is needed for Part F.

7.9 Does the facility accept or process leachate from landfills?: Yes ☐ No ■

7.10 Is wastewater land applied? Yes ☐ No ■

If yes, is Form I attached? Yes ☐ No ■

7.11 Does the facility discharge to a losing stream or sinkhole? Yes ■ No ☐

7.12 Has a wasteload allocation study been completed for this facility? Yes ☐ No ■

8. LABORATORY CONTROL INFORMATION

LABORATORY WORK CONDUCTED BY PLANT PERSONNEL

Lab work conducted outside of plant.	Yes ■	No ☐
Push–button or visual methods for simple test such as pH, settleable solids.	Yes ■	No ☐
Additional procedures such as Dissolved Oxygen, Chemical Oxygen Demand, Biological Oxygen Demand, titrations, solids, volatile content.	Yes ■	No ☐
More advanced determinations such as BOD seeding procedures, fecal coliform, nutrients, total oils, phenols, etc.	Yes ☐	No ■
Highly sophisticated instrumentation, such as atomic absorption and gas chromatograph.	Yes ☐	No ■

FACILITY NAME	PERMIT NO.	OUTFALL NO.
AVA WWTP	MO- 0056260	001

PART A – BASIC APPLICATION INFORMATION

9. SLUDGE HANDLING, USE AND DISPOSAL

9.1 Is the sludge a hazardous waste as defined by 10 CSR 25? Yes ☐ No ☑

9.2 Sludge production (Including sludge received from others): Design Dry Tons/Year 213 Actual Dry Tons/Year 50.390

9.3 Sludge storage provided: 198 Cubic feet; 540 Days of storage; 3.87 Average percent solids of sludge;

☐ No sludge storage is provided. ☐ Sludge is stored in lagoon.

9.4 Type of storage:

☑ Holding Tank ☐ Building
☐ Basin ☐ Lagoon
☐ Concrete Pad ☐ Other (Please describe) _____

9.5 Sludge Treatment:

☐ Anaerobic Digester ☐ Storage Tank ☐ Lime Stabilization ☐ Lagoon
☐ Aerobic Digester ☐ Air or Heat Drying ☐ Composting ☑ Other (Attach Description)

9.6 Sludge use or disposal:

☑ Land Application ☐ Contract Hauler ☐ Hauled to Another Treatment Facility ☐ Solid Waste Landfill
☐ Surface Disposal (Sludge Disposal Lagoon, Sludge Held For More Than Two Years) ☐ Incineration
☐ Other (Attach Explanation Sheet) _____

9.7 Person responsible for hauling sludge to disposal facility:
✓| By Applicant | By Others (complete below)

NAME	E-MAIL ADDRESS		
Steve Davis			
ADDRESS	CITY	STATE	ZIP CODE
P.O. BOX 967	Ava	MO	65608
CONTACT PERSON	TELEPHONE WITH AREA CODE	PERMIT NO.	
Steve Davis	(417) 683-4370	MO- 0056260	

9.8 Sludge use or disposal facility:
■ By Applicant ☐ By Others (Please complete below)

NAME	E-MAIL ADDRESS		
ADDRESS	CITY	STATE	ZIP CODE
CONTACT PERSON	TELEPHONE WITH AREA CODE	PERMIT NO.	
		MO-	

9.9 Does the sludge or biosolids disposal comply with Federal Sludge Regulation 40 CFR 503?
☑ Yes ☐ No (Please explain)

END OF PART A

FACILITY NAME	PERMIT NO.	OUTFALL NO.
AVA WWTP	MO- MO-0056260	001

PART B – ADDITIONAL APPLICATION INFORMATION

10. COLLECTION SYSTEM

10.1 Length of sanitary sewer collection system in miles
25 miles

10.2 Does significant infiltration occur in the collection system? ☑ Yes ☐ No
If yes, briefly explain any steps underway or planned to minimize inflow and infiltration:

I & I elimination program is in place(attached). Smoke testing the collection system and all the man holes in the collection system have been inspected. There has been 600 lineal feet of sewer lines viewed with closed circuit television.

11. BYPASSING

Does any bypassing occur anywhere in the collection system or at the treatment facility? Yes ☐ No ☑
If yes, explain:

12. OPERATION AND MAINTENANCE PERFORMED BY CONTRACTOR(S)

Are any operational or maintenance aspects (related to wastewater treatment and effluent quality) of the treatment works the responsibility of the contractor?
Yes ☐ No ☑
If Yes, list the name, address, telephone number and status of each contractor and describe the contractor's responsibilities. (Attach additional pages if necessary.)

NAME	
MAILING ADDRESS	
TELEPHONE NUMBER WITH AREA CODE	EMAIL ADDRESS
RESPONSIBILITIES OF CONTRACTOR	

13. SCHEDULED IMPROVEMENTS AND SCHEDULES OF IMPLEMENTATION

Provide information about any uncompleted implementation schedule or uncompleted plans for improvements that will affect the wastewater treatment, effluent quality, or design capacity of the treatment works. If the treatment works has several different implementation schedules or is planning several improvements, submit separate responses for each.

none as of now

FACILITY NAME	PERMIT NO.	OUTFALL NO.
AVA WWTP	MO- MO-0056260	001

PART B – ADDITIONAL APPLICATION INFORMATION

14. EFFLUENT TESTING DATA

Applicants must provide effluent testing data for the following parameters. Provide the indicated effluent data **for each outfall through which effluent is discharged**. Do not include information of combined sewer overflows in this section. All information reported must be based on data collected through analysis conducted using 40 CFR Part 136 methods. In addition, this data must comply with QA/QC requirements of 40 CFR Part 136 and other appropriate QA/QC requirements for standard methods for analytes not addressed by 40 CFR Part 136. At a minimum, effluent testing data must be based on at least **three samples** and must be no more than four and one-half years apart.

Outfall Number

PARAMETER	MAXIMUM DAILY VALUE		AVERAGE DAILY VALUE		
	Value	Units	Value	Units	Number of Samples
pH (Minimum)	6.63	S.U.	6.90	S.U.	249
pH (Maximum)	7.18	S.U.	6.90	S.U.	249
Flow Rate	1.175	MGD	.515	MGD	365

*For pH report a minimum and a maximum daily value

POLLUTANT		MAXIMUM DAILY DISCHARGE		AVERAGE DAILY DISCHARGE			ANALYTICAL METHOD	ML/MDL
		Conc.	Units	Conc.	Units	Number of Samples		
Conventional and Nonconventional Compounds								
BIOCHEMICAL OXYGEN DEMAND (Report One)	BOD_5	4.0	mg/L	1.66	mg/L	53	SM5210B	15
	$CBOD_5$	NA	mg/L	NA	mg/L	NA	NA	NA
E. COLI		8	#/100 mL	1.5	#/100 mL	53	SM922D	1,000
TOTAL SUSPENDED SOLIDS (TSS)		4.0	mg/L	2.5	mg/L	53	SM2540D103-50	20
AMMONIA (as N)		0.5	mg/L	0.11	mg/L	53	USGS1-3526-85	9.2/2.8
CHLORINE* (TOTAL RESIDUAL, TRC)		NA	mg/L	NA	mg/L	NA	NA	NA
DISSOLVED OXYGEN		9.9	mg/L	8.8	mg/L	53	SM4500-OG	NA
OIL and GREASE		<5.4	mg/L	<5.2	mg/L	4	EPA1664A	15
OTHER		NA	mg/L	NA	mg/L	NA	NA	NA

*Report only if facility chlorinates

END OF PART B

FACILITY NAME	PERMIT NO.	OUTFALL NO.
AVA WWTP	MO- MO-0056260	001

PART C – CERTIFICATION

15. CERTIFICATION

All applicants must complete the Certification Section. This certification must be signed by an officer of the company or city official. All applicants must complete all applicable sections as explained in the Application Overview. By signing this certification statement, applicants confirm that they have reviewed the entire form and have completed all sections that apply to the facility for which this application is submitted.

ALL APPLICANTS MUST COMPLETE THE FOLLOWING CERTIFICATION.

I certify under penalty of law that this document and all attachments were prepared under my direction or supervision in accordance with a system designed to assure that qualified personnel properly gather and evaluate the information submitted. Based on my inquiry of the person or persons who manage the system or those persons directly responsible for gathering the information, the information is, to the best of my knowledge and belief, true, accurate and complete. I am aware that there are significant penalties for submitting false information, including the possibility of fine and imprisonment for knowing violations.

PRINTED NAME	OFFICIAL TITLE (MUST BE AN OFFICER OF THE COMPANY OR CITY OFFICIAL)
David Norman	Mayor, City of Ava

SIGNATURE: David Norman

TELEPHONE NUMBER WITH AREA CODE: 417-683-5516

DATE SIGNED: 02-13-2015

Upon request of the permitting authority, you must submit any other information necessary to assess wastewater treatment practices at the treatment works or identify appropriate permitting requirements.

Send Completed Form to:

Department of Natural Resources
Water Protection Program
ATTN: NPDES Permits and Engineering Section
P.O. Box 176
Jefferson City, MO 65102

END OF PART C
REFER TO THE APPLICATION OVERVIEW TO DETERMINE WHICH PARTS OF FORM B2 YOU MUST COMPLETE.

Do not complete the remainder of this application, unless at least one of the following statements applies to your facility:

1. Your facility design flow is equal to or greater than 1,000,000 gallons per day.
2. Your facility is a pretreatment treatment works.
3. Your facility is a combined sewer system.

Submittal of an incomplete application may result in the application being returned. Permit fees for returned applications shall be forfeited. Permit fees for applications being processed by the department that are withdrawn by the applicant shall be forfeited.

9.5 Sludge Treatment

Our 2 Digesters are aerated Digesters.

I&I Elimination Program

What is inflow?

Inflow is the rapid flow of storm water into the sanitary sewer system. Storms or snow thaws bring large volumes of water into the system through:

- Downspouts
- Weeping tiles/foundation drains
- Yard drains
- Leaky manhole covers

What is infiltration?

Infiltration is the gradual downward flow of water from the surface of the earth into the soil and into the wastewater collection system.

High groundwater or water remaining in the soil after rain or snow could infiltrate wastewater lateral or mainline pipes, pipe joints and other parts of the wastewater collection system that might have deteriorated, cracked, sagged, or collapsed. This water seeps into the system from the surrounding soil.

Trouble Signs of I & I in the System

Examples of trouble signs of I & I are:

- Greater than anticipated sanitary sewer flows measured at wastewater treatment facilities.
- Sewer system overflows or by-passes at pump stations and wastewater treatment facilities.
- Surcharging of manholes resulting in a loss of pipe capacity.
- Basement flooding during and after rainfall events.

Reducing extraneous storm water flows from the sanitary sewer system will help address health, environmental and economical issues associated with overloading the sanitary sewer.

Consequences of I & I

There are **three major consequences** of too much storm water entering the sanitary sewer system:

1. **Cost**
   Storm water does not require the same level of treatment as sewage does. When

storm water enters the sanitary sewer system, it must be handled in the same manner as sewage; it must be transported and treated which costs Ava's rate payers money.

2. **Overloading**
   An improperly connected sump pump or drainage system into the sanitary sewer system delivers a much higher inflow of water during a storm. This may overload the sanitary sewer system and increase the risk of a sanitary sewage backup into individual residences.
3. **Environmental Impact**
   Overflows of untreated or partially treated wastewater at pumping stations and wastewater treatment facilities, have a negative impact on the very environment that we as Ava residents share.

What is Ava doing to reduce I & I?

Ava has been exploring options and developing various strategies to deal with I & I. Specifically, Ava has developed standards and procedures in the following areas.

1. **Acquire knowledge of the existing system (this is the first step).**
   - Gathering detailed information on the physical aspects of the sewer system (pipes, manholes, laterals, etc), as well as related data that can be used in assessing how the system is performing (flow records, sewer operation and maintenance records, population history, etc). Input information on the system into the GIS mapping program.
2. **Identify likely problem areas.**
   - Locate areas where sewer backups, flooding, or other problems have been reported.
   - Concentrate on low-lying areas, old sections of sewers, and sewers constructed near streams.
3. **Assess the physical condition of the sewer system through field inspections.**
   - Determine and quantify sources of I & I in numerous areas of the system by:
     - **Smoke testing**: A process of blowing non-toxic, non-staining vapor or "smoke" into the sewer system. The purpose is to determine direct connections from downspouts, storm sewers or other potential sources of I & I.
     - **Manhole inspection**: This inspection program involves a visual inspection of the manholes to determine the physical condition of the manhole, as well as any operational defects and potential sources of I & I.
     - **Pipe inspection**: Ava has implemented a visual pipe inspection and reporting program that includes physical aspects of the pipe as well as root infiltration and deposition.
     - **Mainline and lateral closed circuit television (CCTV) inspection**: Investigation of the structural condition of the wastewater main and laterals using a remotely operated camera.

- **Dye testing**: Similar to smoke testing, this involves introducing an environmentally friendly dye to potential sources, such as ditches, storm mains, sump pits etc. The sanitary sewer is monitored to determine if the dye is migrating into the sanitary system.
- **Household Drainage Surveys (HHDS)**: For project areas or areas that exhibit basement flooding, a physical inspection of the properties drainage systems (sump pumps, sewer laterals, lot grading) is completed. The information gathered is used to determine the source of extraneous flows.

4. **Develop and implement a remediation plan for the system.**
   - Establish priorities in rehabilitation, repair, or replacement. Ava has completed studies to identify problematic areas and is continually working to improve the performance and condition of the wastewater system.
   - Implement facility upgrades when needed.
   - Sewer line repairs/replacement through excavation and replacement, linings, and/or cement grouting.
   - Line cleaning and root control.
   - Improvements to operational practices.
   - Manhole rehabilitation projects using linings, grouting, or sealing. Addition of manhole risers.
   - Backflow valve installations.
   - Disconnecting known inflow sources, such as basement drains and downspouts.
   - Correct uncapped cleanouts.

ANNUAL REPORT-PEAK FLOW VOLUNTARY COMPLIANCE AGREEMENT

The City of Ava had previously completed the following activities:

I. Flow Monitoring
Flow monitoring was conducted through July and August of 2011.

II. Plant Modification
In the past, during peak high flow events, the treatment plant diverted some of the flow around the plant. The diverted flow was discharged to a lagoon for primary treatment and then discharged into the receiving stream at Outfall #2. There have been recent piping improvements that allow flow from the lagoon to be returned to the WWTP for treatment, thereby eliminating discharges from Outfall #2.

III. Manhole Inspections
90% of sewer manholes were inspected in 2012 and a report of conditions was created.

These activities were conducted in the past year (FY 2014):

IV. Lift Stations
All city lift stations are inspected weekly and cleaned if needed.

V. Sewer Pipe Inspection and Cleaning
Areas of sewer main were cleaned totaling 19,031 feet. Three old sewer taps were capped. Clean-outs were capped at the park. Sewer main replaced on S. Jefferson and SE 5th Street.

VI. Manhole Improvements
Roots cleaned out of manhole on S Jefferson. Raised manholes on NE 2nd Ave, NE 3rd Ave, NE 4th Ave, and Sundown Ridge.

VII. Camera Inspections
Video inspection of Ron's Carpet building.

VIII. Private line repairs
Private lines repaired on NW 13th Avenue and NE 11th Way.

IX. Smoke Testing
Smoke testing of the entire collection system was completed. Still awaiting report from contractor.

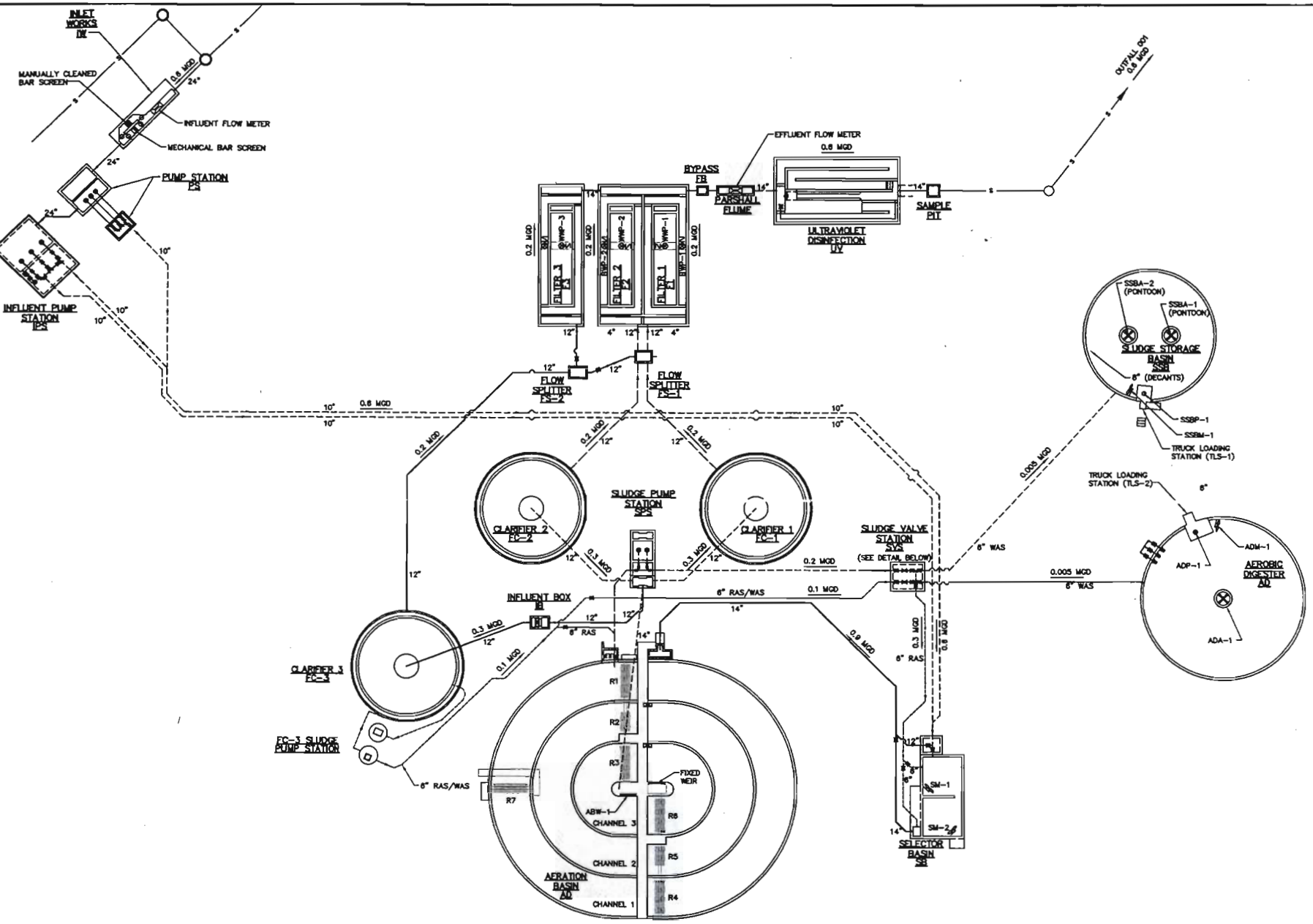

GENERAL NOTE:
ALL PIPING DIP UNLESS OTHERWISE NOTED.

LEGEND

AB	AERATION BASIN
AD	AEROBIC DIGESTER
ADA	AEROBIC DIGESTER AERATOR
ADM	AEROBIC DIGESTER MIXER
BWP	BACKWASH PUMP
CV	CHECK VALVE
EFF	EFFLUENT
EFM	EFFLUENT FLOW METER
F	FILTER
FC	FINAL CLARIFIER
FS	FLOW SPLITTER
IB	INFLUENT BOX
IFM	INFLUENT FLOW METER
IP	INFLUENT PUMP
IPS	INFLUENT PUMP STATION
MFM	MAGNETIC FLOW METER
MH	MANHOLE
MS	MECHANICAL SCREEN
P	PUMP (EXISTING SUBMERSIBLE)
PS	PUMP STATION
PV	PLUG VALVE
R	ROTOR (BRUSH)
RAS	RETURN ACTIVATED SLUDGE
RASFM	RETURN ACTIVATED SLUDGE FLOW METER
RSP	RETURN SLUDGE PUMP
SB	SLUDGE STORAGE BASIN
SD	STORMWATER DIVERSION
SP	SLUDGE PUMP
SPS	SLUDGE PUMP STATION
SVS	SLUDGE VALVE STATION
SWR	STORMWATER RETURN
SWRPS	STORMWATER RETURN PUMP STATION
UV	ULTRAVIOLET DISINFECTION
WAS	WASTE ACTIVATED SLUDGE
WASFM	WASTE ACTIVATED SLUDGE FLOW METER
WWP	WASHWATER PUMP

SYMBOLS

- AERATOR
- BAR SCREEN – MECHANICAL
- BAR SCREEN – MANUAL
- BRUSH ROTOR
- PARSHALL FLUME
- CHECK VALVE
- BUTTERFLY VALVE
- PLUG VALVE
- GATE VALVE
- SLUICE GATE
- SLIDE GATE
- TELESCOPING VALVE
- MAGNETIC FLOW METER
- CENTRIFUGAL PUMP
- SUBMERSIBLE MIXER
- MIXER
- DIRECTION OF FLOW

REVISION DESCRIPTION	BY

SCE SCOTT CONSULTING ENGINEERS, P.C.
550 ST. LOUIS STREET, SPRINGFIELD, MISSOURI, 65806
PHONE (417) 866-6644 FAX (417) 866-3035
E-MAIL: sce@scottsing.com

DESIGNED
DRAWN
CHECKED
DATE 08-11-09
DWG. NAME FIG1WWTPS
SCALES: HORZ NOT TO SCALE VERT

CITY OF AVA, MISSOURI

WATEWATER IMPROVEMENTS

WASTEWATER TREATMENT PLANT

FIGURE 1
PLANT FLOW SCHEMATIC

SHEET 1 OF 1

PROJ. NO. 108178.00
FILE NO. NA

© Copyright 2009 – Scott Consulting Engineers, P.C.

11-5-15-5

PREPARED BY DOUGLAS COUNTY ASSESSOR
ALICIA DEGASE

DOUGLAS COUNTY ASSESSOR

1 inch equals 300 feet

THIS PROPERTY OWNERSHIP MAP IS FOR TAX PURPOSES ONLY.
IT IS NOT INTENDED FOR CONVEYANCES.

N
W E
S

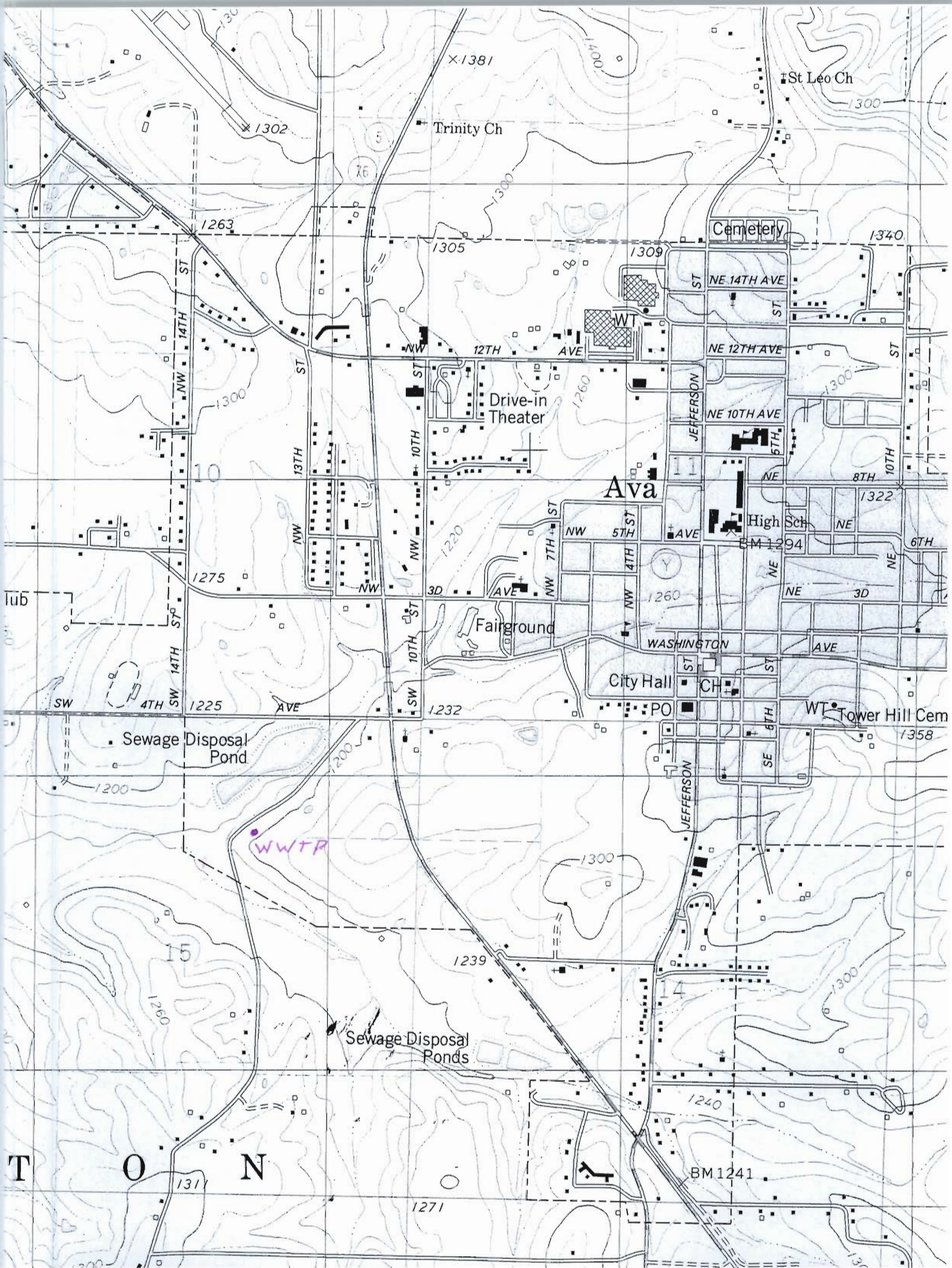
St Leo Ch
Trinity Ch
Cemetery
WT
Drive-in Theater
Ava
High Sch
BM 1294
Fairground
City Hall
CH
PO
WT
Tower Hill Cem
Sewage Disposal Pond
WWTP
Sewage Disposal Ponds
BM 1241
NE 14TH AVE
NE 12TH AVE
NE 10TH AVE
NE 8TH
NW 12TH AVE
NW 5TH AVE
NW 3D AVE
NE 3D
WASHINGTON AVE
SW 4TH AVE
JEFFERSON
14TH ST NW
13TH ST NW
10TH ST NW
7TH ST NW
4TH ST NW
6TH ST NE
10TH ST NE
6TH ST SE
10TH ST SW
14TH ST SW
1263
1305
1309
1340
1322
1275
1225
1232
1358
1239
1241
1271
1131
1302
1381
1300
1260
1220
1200
1240
10
11
14
15