STATE OF MISSOURI

DEPARTMENT OF NATURAL RESOURCES

MISSOURI CLEAN WATER COMMISSION

MISSOURI STATE OPERATING PERMIT

In compliance with the Missouri Clean Water Law, (Chapter 644 R.S. Mo. as amended, hereinafter, the Law), and the Federal Water Pollution Control Act (Public Law 92-500, 92nd Congress) as amended,

Permit No.	MO-0029378
Owner:	United States Air Force
Address:	509 CES/CEIE; 660 10th Street, Suite 211, Whiteman AFB, MO, 65305
Continuing Authority:	Same as above
Address:	Same as above
Facility Name:	Whiteman Air Force Base
Facility Address:	174 SE 23 Highway, Whiteman Air Force Base, MO 65305
Legal Description:	See page 2
UTM Coordinates:	See page 2
Receiving Stream:	See page 2
First Classified Stream and ID:	See page 2
USGS Basin & Sub-watershed No.:	See page 2

is authorized to discharge from the facility described herein, in accordance with the effluent limitations and monitoring requirements as set forth herein:

FACILITY DESCRIPTION

See Page #2

This permit authorizes only wastewater and storm water discharges under the Missouri Clean Water Law and the National Pollutant Discharge Elimination System; it does not apply to other regulated areas. This permit may be appealed in accordance with Section 621.250 RSMo, Section 640.013 RSMo and Section 644.051.6 of the Law.

February 1, 2017
Effective Date

Steven Feeler, Acting Director, Division of Environmental Quality

September 30, 2021
Expiration Date

David J. Lamb, Acting Director, Water Protection Program

FACILITY DESCRIPTION (continued):

Outfall(s) #001 – FOTW- SIC #9711
The use or operation of this facility shall be by or under the supervision of a Certified "A" Operator.
Auger for solids removal/aerated grit chamber/ 2 primary clarifiers/ 2 trickling filters/ 2 final clarifiers/ 2 covered lemna treatment cells/ UV disinfection/ 2 primary, 1 secondary anaerobic sludge digesters/ 2 Sludge drying beds/ sludge belt press/ sludge storage pad/ sludge is disposed by land application and/or hauled to a solid waste landfill
Design population equivalent is 13,300.
Design flow is 2.19 Million gallons per day.
Actual flow is 0.55 million gallons per day.
Design sludge production is 85 dry tons/year.

Legal Description:	SW ¼, SE ¼, Sec. 32, T46N, R24W, Johnson County
UTM Coordinates:	X=449268, Y=4286721
Receiving Stream:	Brewer Branch (C)
First Classified Stream and ID:	8-20-13 MUDD V1.0 (C) (3960)
USGS Basin & Sub-watershed No.:	(10300104-0303)

Outfall #002-Eliminated

Outfall #003-Eliminated

Outfall #004 – Eliminated- All wastewater discharged to irrigation pond has been fully treated. Sampling taken prior to splitting of flow but after all treatment processes have completed.

OUTFALL #001	TABLE A-1 FINAL EFFLUENT LIMITATIONS AND MONITORING REQUIREMENTS	PAGE NUMBER 3 of 9 PERMIT NUMBER MO-0029378

The permittee is authorized to discharge from outfall(s) with serial number(s) as specified in the application for this permit. The final effluent limitations shall become effective on **February 1, 2017** and remain in effect until expiration of the permit. Such discharges shall be controlled, limited and monitored by the permittee as specified below:

EFFLUENT PARAMETER(S)	UNITS	FINAL EFFLUENT LIMITATIONS			MONITORING REQUIREMENTS	
		DAILY MAXIMUM	WEEKLY AVERAGE	MONTHLY AVERAGE	MEASUREMENT FREQUENCY	SAMPLE TYPE
Flow	MGD	*		*	once/weekday***	24 hr. total
Biochemical Oxygen Demand$_5$ (June 1 – Sep 30) (Oct 1 – May 31)	mg/L		15 20	10 15	once/week	composite**
Total Suspended Solids	mg/L		20	15	once/week	composite**
E. coli (Note 1, Page 4) (Note 2, Page 4)	#/100mL		1030	206	once/week	grab
Ammonia as N (Apr 1 – Sep 30) (Oct 1 – Mar 31)	mg/L	4.5 7.0		1.3 2.9	once/week	grab
MONITORING REPORTS SHALL BE SUBMITTED MONTHLY; THE FIRST REPORT IS DUE MARCH 28, 2017. THERE SHALL BE NO DISCHARGE OF FLOATING SOLIDS OR VISIBLE FOAM IN OTHER THAN TRACE AMOUNTS.						
Total Phosphorus	mg/L	*		*	once/quarter*****	grab
Total Nitrogen	mg/L	*		*	once/quarter*****	grab
Oil & Grease	mg/L	15		10	once/quarter*****	grab
Cyanide, Amendable to Chlorine	µg/L	*		*	once/quarter*****	grab
Cadmium, Total Recoverable	µg/L	*		*	once/quarter*****	grab
Chromium (VI), Total Recoverable	µg/L	*		*	once/quarter*****	grab
Copper, Total Recoverable	µg/L	*		*	once/quarter*****	grab
Lead, Total Recoverable	µg/L	*		*	once/quarter*****	grab
Nickel, Total Recoverable	µg/L	*		*	once/quarter*****	grab
Silver, Total Recoverable	µg/L	*		*	once/quarter*****	grab
Zinc, Total Recoverable	µg/L	*		*	once/quarter*****	grab
Phenol, Total Recoverable	µg/L	*		*	once/quarter*****	grab
MONITORING REPORTS SHALL BE SUBMITTED QUARTERLY; THE FIRST REPORT IS DUE APRIL 28, 2017.						
EFFLUENT PARAMETER(S)	UNITS	MINIMUM		MAXIMUM	MEASUREMENT FREQUENCY	SAMPLE TYPE
pH – Units ****	SU	6.5		9.0	once/week	grab
MONITORING REPORTS SHALL BE SUBMITTED MONTHLY; THE FIRST REPORT IS DUE MARCH 28, 2017.						

* Monitoring requirement only.
** A 24-hour composite sample is composed of 48 aliquots (subsamples) collected at 30 minute intervals by an automatic sampling device.
*** Once each weekday means: Monday, Tuesday, Wednesday, Thursday, and Friday.
**** pH is measured in pH units and is not to be averaged.
***** See table below for quarterly sampling requirements.

Minimum Sampling Requirements			
Quarter	**Months**	**Quarterly Parameters**	**Report is Due**
First	January, February, March	Sample at least once during any month of the quarter	April 28th
Second	April, May, June	Sample at least once during any month of the quarter	July 28th
Third	July, August, September	Sample at least once during any month of the quarter	October 28th
Fourth	October, November, December	Sample at least once during any month of the quarter	January 28th

Note 1 - Effluent limitations and monitoring requirements for *E. coli* are applicable only during the recreational season from April 1 through October 31. The Monthly Average Limit for *E. coli* is expressed as a geometric mean. The Weekly Average for *E. coli* will be expressed as a geometric mean if more than one (1) sample is collected during a calendar week (Sunday through Saturday).

Note 2- Effluent limitations and monitoring requirements for *E. coli* are applicable during the non- recreational season from November 1st through March 31st when diverted for irrigation use.

OUTFALL #001	**TABLE A-2 WHOLE EFFLUENT TOXICITY FINAL EFFLUENT LIMITATIONS AND MONITORING REQUIREMENTS**	PAGE NUMBER 4 of 9 PERMIT NUMBER MO-0029378

The permittee is authorized to discharge from outfall(s) with serial number(s) as specified in the application for this permit. The final effluent limitations shall become effective on **February 1, 2017** and remain in effect until expiration of the permit. Such discharges shall be controlled, limited and monitored by the permittee as specified below:

EFFLUENT PARAMETER(S)	UNITS	FINAL EFFLUENT LIMITATIONS			MONITORING REQUIREMENTS	
		DAILY MAXIMUM	WEEKLY AVERAGE	MONTHLY AVERAGE	MEASUREMENT FREQUENCY	SAMPLE TYPE
Acute Whole Effluent Toxicity (Note 3)	TU_a	*			once/year	composite**
MONITORING REPORTS SHALL BE SUBMITTED ANNUALLY; THE FIRST REPORT IS DUE JANUARY 28, 2018.						
Chronic Whole Effluent Toxicity (Note 4)	TU_c	*			once/permit cycle	composite**
WET TEST REPORTS SHALL BE SUBMITTED ONCE PER PERMIT CYCLE; THE FIRST REPORT IS DUE JANUARY 28, 2021.						

* Monitoring requirement only.
** A 24-hour composite sample is composed of 48 aliquots (subsamples) collected at 30 minute intervals by an automatic sampling device.

Note 3 – The Acute WET test shall be conducted once per year during the 1st, 2nd, 3rd, and 5th year of the permit cycle. See Special Condition #20 for additional requirements.

Note 4 –The Chronic WET test shall be conducted during the 4th year of the permit cycle. See Special Condition #21 for additional requirements.

TABLE B.
INFLUENT MONITORING REQUIREMENTS

The facility is required to meet a removal efficiency of 85% or more as a monthly average. The monitoring requirements shall become effective on **February 1, 2017** and remain in effect until expiration of the permit. To determine removal efficiencies, the influent wastewater shall be monitored by the permittee as specified below:

SAMPLING LOCATION AND PARAMETER(S)	UNITS	MONITORING REQUIREMENTS	
		MEASUREMENT FREQUENCY	SAMPLE TYPE
Biochemical Oxygen Demand$_5$	mg/L	once/month	Composite
Total Suspended Solids	mg/L	once/month	Composite

MONITORING REPORTS SHALL BE SUBMITTED MONTHLY; THE FIRST REPORT IS DUE MARCH 28, 2017.

C. STANDARD CONDITIONS

In addition to specified conditions stated herein, this permit is subject to the attached Parts I, II, & III standard conditions dated August 1, 2014, May 1, 2013, and March 1, 2015, and hereby incorporated as though fully set forth herein.

D. SPECIAL CONDITIONS

1. This permit establishes final ammonia limitations based on Missouri's current Water Quality Standard. On August 22, 2013, the U.S. Environmental Protection Agency (EPA) published a notice in the Federal Register announcing of the final national recommended ambient water quality criteria for protection of aquatic life from the effects of ammonia in freshwater. The EPA's guidance, Final Aquatic Life Ambient Water Quality Criteria for Ammonia – Fresh Water 2013, is not a rule, nor automatically part of a state's water quality standards. States must adopt new ammonia criteria consistent with EPA's published ammonia criteria into their water quality standards that protect the designated uses of the water bodies. The Department of Natural Resources has initiated stakeholder discussions on how to best incorporate these new criteria into the State's rules. A date for when this rule change will occur has not been determined. Also, refer to Section VI of this permit's factsheet for further information including estimated future effluent limits for this facility. It is recommended the permittee view the Department's 2013 EPA criteria Factsheet located at http://dnr.mo.gov/pubs/pub2481.htm.

2. This permit may be reopened and modified, or alternatively revoked and reissued, to:
   (a) Comply with any applicable effluent standard or limitation issued or approved under Sections 301(b)(2)(C) and (D), 304(b)(2), and 307(a) (2) of the Clean Water Act, if the effluent standard or limitation so issued or approved:
      (1) contains different conditions or is otherwise more stringent than any effluent limitation in the permit; or
      (2) controls any pollutant not limited in the permit.
   (b) Incorporate new or modified effluent limitations or other conditions, if the result of a waste load allocation study, toxicity test including acute and chronic Whole Effluent Toxicity (WET) tests, or other information indicates changes are necessary to assure compliance with Missouri's Water Quality Standards.
   (c) Incorporate new or modified effluent limitations or other conditions if, as the result of a watershed analysis, a Total Maximum Daily Load (TMDL) limitation is developed for the receiving waters which are currently included in Missouri's list of waters of the state not fully achieving the state's water quality standards, also called the 303(d) list.

D. SPECIAL CONDITIONS (continued)

(d) Incorporate the requirement to develop a pretreatment program pursuant to 40 CFR 403.8(a) when the Director of the Water Protection Program determines that a pretreatment program is necessary due to any new introduction of pollutants into the Publically Owned Treatment Works or any substantial change in the volume or character of pollutants being introduced.

The permit as modified or reissued under this paragraph shall also contain any other requirements of the Clean Water Act then applicable.

3. All outfalls must be clearly marked in the field.

4. Permittee will cease discharge by connection to a facility with an area-wide management plan per 10 CSR 20-6.010(3)(B) within 90 days of notice of its availability.

5. Report as no-discharge when a discharge does not occur during the report period.

6. Water Quality Standards
   (a) To the extent required by law, discharges to waters of the state shall not cause a violation of water quality standards rule under 10 CSR 20-7.031, including both specific and general criteria.
   (b) General Criteria. The following general water quality criteria shall be applicable to all waters of the state at all times including mixing zones. No water contaminant, by itself or in combination with other substances, shall prevent the waters of the state from meeting the following conditions:
      (1) Waters shall be free from substances in sufficient amounts to cause the formation of putrescent, unsightly or harmful bottom deposits or prevent full maintenance of beneficial uses;
      (2) Waters shall be free from oil, scum and floating debris in sufficient amounts to be unsightly or prevent full maintenance of beneficial uses;
      (3) Waters shall be free from substances in sufficient amounts to cause unsightly color or turbidity, offensive odor or prevent full maintenance of beneficial uses;
      (4) Waters shall be free from substances or conditions in sufficient amounts to result in toxicity to human, animal or aquatic life;
      (5) There shall be no significant human health hazard from incidental contact with the water;
      (6) There shall be no acute toxicity to livestock or wildlife watering;
      (7) Waters shall be free from physical, chemical or hydrologic changes that would impair the natural biological community;
      (8) Waters shall be free from used tires, car bodies, appliances, demolition debris, used vehicles or equipment and solid waste as defined in Missouri's Solid Waste Law, section 260.200, RSMo, except as the use of such materials is specifically permitted pursuant to section 260.200-260.247.

7. Changes in existing pollutants or the addition of new pollutants to the treatment facility

   The permittee must provide adequate notice to the Director of the following:
   (a) Any new introduction of pollutants into the POTW from an indirect discharger which would be subject to section 301 or 306 of CWA if it were directly discharging those pollutants; and
   (b) Any substantial change in the volume or character of pollutants being introduced into that POTW by a source introducing pollutants into the POTW at the time of issuance of the permit.
   (c) For purposes of this paragraph, adequate notice shall include information on;
      (1) the quality and quantity of effluent introduced into the POTW, and
      (2) any anticipated impact of the change on the quantity or quality of effluent to be discharged from the POTW.

8. Reporting of Non-Detects:
   (a) An analysis conducted by the permittee or their contracted laboratory shall be conducted in such a way that the precision and accuracy of the analyzed result can be enumerated.
   (b) The permittee shall not report a sample result as “Non-Detect” without also reporting the detection limit of the test. Reporting as “Non Detect” without also including the detection limit will be considered failure to report, which is a violation of this permit.
   (c) The permittee shall provide the “Non-Detect” sample result using the less than sign and the minimum detection limit (e.g. <10).
   (d) Where the permit contains a Minimum Level (ML) and the permittee is granted authority in the permit to report zero in lieu of the < ML for a specified parameter (conventional, priority pollutants, metals, etc.), then zero (0) is to be reported for that parameter.
   (e) See Standard Conditions Part I, Section A, #4 regarding proper detection limits used for sample analysis.
   (f) When calculating monthly averages, one-half of the method detection limit (MDL) should be used instead of a zero. Where all data are below the MDL, the “<MDL” shall be reported as indicated in item (c).

D. SPECIAL CONDITIONS (continued)

9. It is a violation of the Missouri Clean Water Law to fail to pay fees associated with this permit (644.055 RSMo).

10. The permittee shall comply with any applicable requirements listed in 10 CSR 20-9, unless the facility has received written notification that the Department has approved a modification to the requirements. The monitoring frequencies contained in this permit shall not be construed by the permittee as a modification of the monitoring frequencies listed in 10 CSR 20-9. If a modification of the monitoring frequencies listed in 10 CSR 20-9 is needed, the permittee shall submit a written request to the Department for review and, if deemed necessary, approval.

11. The permittee shall develop and implement a program for maintenance and repair of the collection system. The recommended guidance is the US EPA's Guide For Evaluating Capacity, Management, Operation, And Maintenance (CMOM) Programs At Sanitary Sewer Collection Systems (Document number EPA 305-B-05-002) or the Departments' CMOM Model located at http://dnr.mo.gov/env/wpp/permits/docs/cmom-template.doc . For additional information regarding the Departments' CMOM Model, see the CMOM Plan Model Guidance document at http://dnr.mo.gov/pubs/pub2574.htm .

    The permittee shall also submit a report to the Kansas City Regional Office annually, by January 28th, for the previous calendar year. The report shall contain the following information:
    (a) A summary of the efforts to locate and eliminate sources of excessive infiltration and inflow into the collection system serving the facility for the previous year.
    (b) A summary of the general maintenance and repairs to the collection system serving the facility for the previous year.
    (c) A summary of any planned maintenance and repairs to the collection system serving the facility for the upcoming calendar year. This list shall include locations (GPS, 911 address, manhole number, etc.) and actions to be taken.

12. Bypasses are not authorized at this facility unless they meet the criteria in 40 CFR 122.41(m). If a bypass occurs, the permittee shall report in accordance to 40 CFR 122.41(m)(3), and with Standard Condition Part I, Section B, subsection 2.b. Bypasses are to be reported to the Kansas City Regional Office or by using the online Sanitary Sewer Overflow/Facility Bypass Application, located at: http://dnr.mo.gov/modnrcag/ during normal business hours or the Environmental Emergency Response hotline at 573-634-2436 outside of normal business hours. Blending, which is the practice of combining a partially-treated wastewater process stream with a fully-treated wastewater process stream prior to discharge, is not considered a form of bypass. If the permittee wishes to utilize blending, the permittee shall file an application to modify this permit to facilitate the inclusion of appropriate monitoring conditions.

13. The facility must be sufficiently secured to restrict entry by children, livestock and unauthorized persons as well as to protect the facility from vandalism.

14. At least one gate must be provided to access the wastewater treatment facility and provide for maintenance and mowing. The gate shall remain closed except when temporarily opened by; the permittee to access the facility, perform operational monitoring, sampling, maintenance, mowing, or for inspections by the Department. The gate shall be closed and locked when the facility is not staffed.

15. At least one (1) warning sign shall be placed on each side of the facility enclosure in such positions as to be clearly visible from all directions of approach. There shall also be one (1) sign placed for every five hundred feet (500') (150 m) of the perimeter fence. A sign shall also be placed on each gate. Minimum wording shall be SEWAGE TREATMENT FACILITY—KEEP OUT. Signs shall be made of durable materials with characters at least two inches (2") high and shall be securely fastened to the fence, equipment or other suitable locations.

16. An Operation and Maintenance (O & M) manual shall be maintained by the permittee and made available to the operator. The O & M manual shall include key operating procedures and a brief summary of the operation of the facility.

17. An all-weather access road shall be provided to the treatment facility.

18. The discharge from the wastewater treatment facility shall be conveyed to the receiving stream via a closed pipe or a paved or rip-rapped open channel. Sheet or meandering drainage is not acceptable. The outfall sewer shall be protected against the effects of floodwater, ice or other hazards as to reasonably insure its structural stability and freedom from stoppage. The outfall shall be maintained so that a sample of the effluent can be obtained at a point after the final treatment process and before the discharge mixes with the receiving waters.

D. SPECIAL CONDITIONS (continued)

19. Land application of biosolids shall be conducted in accordance with Standard Conditions III and a Department approved biosolids management plan. Land application of biosolids during frozen, snow covered, or saturated soil conditions in accordance with the additional requirements specified in WQ426 shall occur only with prior approval from the Department.

20. Acute Whole Effluent Toxicity (WET) tests shall be conducted as follows:
    (a) Freshwater Species and Test Methods: Species and short-term test methods for estimating the acute toxicity of NPDES effluents are found in the most recent edition of *Methods for Measuring the Acute Toxicity of Effluents and Receiving Waters to Freshwater and Marine Organisms* (EPA/821/R-02/012; Table IA, 40 CFR Part 136). The permittee shall concurrently conduct 48-hour, static, non-renewal toxicity tests with the following species:
        - The fathead minnow, *Pimephales promelas* (Acute Toxicity EPA Test Method 2000.0).
        - The daphnid, *Ceriodaphnia dubia* (Acute Toxicity EPA Test Method 2002.0).
    (b) Chemical and physical analysis of the upstream control sample and effluent sample shall occur immediately upon being received by the laboratory, prior to any manipulation of the effluent sample beyond preservation methods consistent with federal guidelines for WET testing that are required to stabilize the sample during shipping. Where upstream receiving water is not available or known to be toxic, other approved control water may be used.
    (c) Test conditions must meet all test acceptability criteria required by the EPA Method used in the analysis.
    (d) The Allowable Effluent Concentration (AEC) for this facility is 100% with the dilution series being: 100%, 50%, 25%, 12.5%, and 6.25%.
    (e) All chemical and physical analysis of the effluent sample performed in conjunction with the WET test shall be performed at the 100% effluent concentration.
    (f) All chemical analyses shall be performed and results shall be recorded in the appropriate field of the report form. The parameters for chemical analysis include pH (SU), Conductivity (µmohs/cm), Dissolved Oxygen (mg/L), Total Residual Chlorine (mg/L), Un-ionized Ammonia (mg/L), Total Alkalinity (mg/L), and Total Hardness (mg/L).
    (g) The facility must submit a full laboratory report for all toxicity testing. The report must include a quantification of acute toxic units ($TU_a = 100/LC_{50}$) reported according to the test methods manual chapter on report preparation and test review. The Lethal Concentration 50 Percent (LC_{50}) is the effluent concentration that would cause death in 50 percent of the test organisms at a specific time.

21. Chronic Whole Effluent Toxicity (WET) tests shall be conducted as follows:
    (h) Freshwater Species and Test Methods: Species and short-term test methods for estimating the chronic toxicity of NPDES effluents are found in the most recent edition of *Short-term Methods for Estimating the Chronic Toxicity of Effluents and Receiving Waters to Freshwater Organisms (EPA/821/R-02/013; Table IA, 40 CFR Part 136).* The permittee shall concurrently conduct 7-day, static, renewal toxicity tests with the following species:
        - The fathead minnow, *Pimephales promelas* (Survival and Growth Test Method 1000.0).
        - The daphnid, *Ceriodaphnia dubia* (Survival and Reproduction Test Method 1002.0).
    (i) Chemical and physical analysis of the upstream control sample and effluent sample shall occur immediately upon being received by the laboratory, prior to any manipulation of the effluent sample beyond preservation methods consistent with federal guidelines for WET testing that are required to stabilize the sample during shipping. Where upstream receiving water is not available or known to be toxic, other approved control water may be used.
    (j) Test conditions must meet all test acceptability criteria required by the EPA Method used in the analysis.
    (k) The Allowable Effluent Concentration (AEC) is 100%, the dilution series is: 100%, 50%, 25%, 12.5%, and 6.25%.
    (l) All chemical and physical analysis of the effluent sample performed in conjunction with the WET test shall be performed at the 100% effluent concentration.
    (m) All chemical analyses shall be performed and results shall be recorded in the appropriate field of the report form. The parameters for chemical analysis include Temperature (°F), pH (SU), Conductivity (µmohs/cm), Dissolved Oxygen (mg/L), Total Residual Chlorine (mg/L), Un-ionized Ammonia (mg/L), Total Alkalinity (mg/L), and Total Hardness (mg/L).
    (n) The facility must submit a full laboratory report for all toxicity testing. The report must include a quantification of chronic toxic units ($TU_c = 100/IC_{25}$) reported according to the *Methods for Measuring the Chronic Toxicity of Effluents and Receiving Waters to Freshwater and Marine Organisms* chapter on report preparation and test review. The 25 percent Inhibition Effect Concentration (IC_{25}) is the toxic or effluent concentration that would cause 25 percent reduction in mean young per female or in growth for the test populations

22. Discharge Monitoring Reports
    a. All reports and results required to be submitted by the permit, excluding 24-hr. bypass reporting, must be submitted to the Department via the electronic Discharge Monitoring Report Submission System (eDMR). In regards to Standard Conditions Part I, Section B, #7, the eDMR data reporting system is the only Department approved reporting method for this permit.
    b. To access the eDMR data reporting system, use the following link in your web browser: https://edmr.dnr.mo.gov/edmr/E2/Shared/Pages/Main/Login.aspx .

D. SPECIAL CONDITIONS (continued)

23. Stormwater Pollution Prevention Plan:
Facility SIC codes found in 40 CFR 122.26(b)(14) and/or 10 CSR 20-6.200(2) shall implement a SWPPP and must be prepared and implemented no later than 180 days from the effective date of this permit. The SWPPP must be kept on-site and should not be sent to the department unless specifically requested. The SWPPP must be reviewed and updated every five (5) years or as site conditions change (see Rationale and Derivation: antidegradation analysis and SWPPP in the fact sheet). The permittee shall select, install, use, operate, and maintain the Best Management Practices prescribed in the SWPPP in accordance with the concepts and methods described in: *Developing Your Stormwater Pollution Prevention Plan, A Guide for Industrial Operators*, (EPA 833-B-09-002) published by the EPA in February 2009 (www.epa.gov/npdes/pubs/industrial_swppp_guide.pdf). The SWPPP must include:

(a) A listing of specific contaminants and their control measures (or BMPs) and a narrative explaining how BMPs are implemented to control and minimize the amount of contaminants potentially entering stormwater. The BMPs should be designed to treat the stormwater up to the 10 year, 24 hour rain event.
(b) For new, altered, or expanded stormwater discharges, the SWPPP shall identify reasonable and effective BMPs while accounting for environmental impacts of varying control methods. The antidegradation analysis must document why no discharge or no exposure options are not feasible. The selection and documentation of appropriate control measures shall serve as an alternative analysis of technology and fulfill the requirements of antidegradation [10 CSR 20-7.031(3)]. Failure to implement and maintain the chosen BMP is a permit violation. For further guidance, consult the antidegradation implementation procedure at http://dnr.mo.gov/env/wpp/docs/AIP050212.pdf .
(c) The SWPPP must include a schedule for once per month site inspections and brief written reports. The inspection report must include precipitation information for the entire period since last inspection, as well as observations and evaluations of BMP effectiveness. Throughout coverage under this permit, the facility must perform ongoing SWPPP review and revision to incorporate any site condition changes.
    i. Operational deficiencies must be corrected within seven (7) calendar days.
    ii. Minor structural deficiencies must be corrected within fourteen (14) calendar days.
    iii. Major structural deficiencies must be reported to the regional office within seven (7) days of discovery. The initial report shall consist of the deficiency noted, the proposed remedies, the interim or temporary remedies (including the general timing of the placement of the interim measures), and an estimate of the timeframe needed to wholly complete the repairs or construction. The permittee will work with the regional office to determine the best course of action, including but not limited to temporary structures to control stormwater runoff. The facility shall correct the major structural deficiency as soon as reasonably achievable.
    iv. All actions taken to correct the deficiencies shall be included with the written report, including photographs.
    v. Inspection reports must be kept on site with the SWPPP and maintained for a period of five (5) years. These must be made available to department and EPA personnel upon request.
(d) A provision for designating an individual to be responsible for environmental matters.
(e) A provision for providing training to all personnel involved in material handling and storage, and housekeeping of maintenance and cleaning areas. Proof of training shall be submitted on request of the department.

24. Permittee shall adhere to the following minimum Best Management Practices (BMPs):

(a) Prevent the spillage or loss of fluids, oil, grease, fuel, etc. from vehicle maintenance, equipment cleaning, or warehouse activities and thereby prevent the contamination of stormwater from these substances.
(b) Provide collection facilities and arrange for proper disposal of waste products including but not limited to petroleum waste products, and solvents.
(c) Store all paint, solvents, petroleum products and petroleum waste products (except fuels), and storage containers (such as drums, cans, or cartons) so that these materials are not exposed to stormwater or provide other prescribed BMPs such as plastic lids and/or portable spill pans to prevent the commingling of stormwater with container contents. Commingled water may not be discharged under this permit. Provide spill prevention control, and/or management sufficient to prevent any spills of these pollutants from entering waters of the state. Any containment system used to implement this requirement shall be constructed of materials compatible with the substances contained and shall also prevent the contamination of groundwater.
(d) Provide good housekeeping practices on the site to keep trash from entry into waters of the state.
(e) Provide sediment and erosion control sufficient to prevent or control sediment loss off of the property to comply with general water quality criteria, effluent limits, or benchmarks. This could include the use of straw bales, silt fences, or sediment basins, if needed.
(f) Ensure adequate provisions are provided to prevent surface water intrusion into the storage basin, to divert stormwater runoff around the storage basin, and to protect embankments from erosion.

MISSOURI DEPARTMENT OF NATURAL RESOURCES
FACT SHEET
FOR THE PURPOSE OF RENEWAL
OF
WHITEMAN AIR FORCE BASE WASTEWATER TREATMENT PLANT
MO-0029378

The Federal Water Pollution Control Act ("Clean Water Act" Section 402 Public Law 92-500 as amended) established the National Pollution Discharge Elimination System (NPDES) permit program. This program regulates the discharge of pollutants from point sources into the waters of the United States, and the release of stormwater from certain point sources. All such discharges are unlawful without a permit (Section 301 of the "Clean Water Act"). After a permit is obtained, a discharge not in compliance with all permit terms and conditions is unlawful. Missouri State Operating Permits (MSOPs) are issued by the Director of the Missouri Department of Natural Resources (Department) under an approved program, operating in accordance with federal and state laws (Federal "Clean Water Act" and "Missouri Clean Water Law" Section 644 as amended). MSOPs are issued for a period of five (5) years unless otherwise specified.

As per [40 CFR Part 124.8(a)] and [10 CSR 20-6.020(1)2.] a Factsheet shall be prepared to give pertinent information regarding the applicable regulations, rationale for the development of effluent limitations and conditions, and the public participation process for the Missouri State Operating Permit (operating permit) listed below.

A Factsheet is not an enforceable part of an operating permit.

This Factsheet is for a Major.

Part I – Facility Information

Facility Type: FOTW - SIC #9711

Facility Description:
Auger for solids removal/aerated grit chamber/ 2 primary clarifiers/ 2 trickling filters/ 2 final clarifiers/ 2 covered lemna treatment cells/ UV disinfection/ 2 primary, 1 secondary anaerobic sludge digesters/ 2 Sludge drying beds/ sludge belt press/ sludge storage pad/ sludge is disposed by land application and/or hauled to a solid waste landfill

Have any changes occurred at this facility or in the receiving water body that effects effluent limit derivation?
☒ - Yes; Brewers Branch (C) is now classified as EPA has approved the Department's new stream classifications.

Application Date: 02/17/2016
Expiration Date: 09/30/2016

OUTFALL(S) TABLE:

OUTFALL	DESIGN FLOW (CFS)	TREATMENT LEVEL	EFFLUENT TYPE
#001	3.3	Secondary	Domestic

Facility Performance History:
Review of the previous five years of discharge monitoring reports shows the following exceedances. 06/13/13 Ammonia as N, pH on 10/31/2014, 09/30/14, 09/30/13, and 12/31/2013. Total Suspended Solids on 02/28/2014, This facility was last inspected on 06/13/2013. The conditions of the facility at the time of inspection were found to be satisfactory.

Comments:
The previous permit listed the irrigation reservoir at the golf course as Outfall #004. Irrigation of the wastewater on the golf course has been determined to not be part of the treatment process. Sampling takes place after U.V. disinfection prior to flow being directed to either receiving stream or golf course irrigation pond. All water irrigated to the golf course is fully treated and does not require any further monitoring or treatment. Changes in this permit include the addition of E. coli limit for outfall #001 as the stream now has a designation of Whole Body Contact B. Disinfection is required year round for all effluent diverted for all golf course irrigation use. As the previous permit was issued for a period of less than five years, all reasonable potential analysis have been retained. See Part VII of the Fact Sheet for further information regarding the addition and removal of effluent parameters. Special conditions were updated to include the addition of inflow and infiltration reporting requirements, reporting of Non-detects and bypass reporting requirement.

Part II – Operator Certification Requirements

☒ - This facility is required to have a certified operator.

As per [10 CSR 20-6.010(8) Terms and Conditions of a Permit], the permittee shall operate and maintain facilities to comply with the Missouri Clean Water Law and applicable permit conditions and regulations. Operators or supervisors of operations at regulated wastewater treatment facilities shall be certified in accordance with [10 CSR 20-9.020(2)] and any other applicable state law or regulation. As per [10 CSR 20-9.020(2)(A)], requirements for operation by certified personnel shall apply to all wastewater treatment systems, if applicable, as listed below:

Owned or operated by or for a

- ☐ - Municipalities
- ☒ - Federal agency
- ☐ - County
- ☐ - Public Sewer District
- ☐ - State agency
- ☐ - Private Sewer Company regulated by the Public Service Commission
- ☐ - Public Water Supply Districts

Each of the above entities are only applicable if they have a Population Equivalent greater than two hundred (200) or fifty (50) or more service connections.

This facility currently requires an operator with an A Certification Level. Please see **Appendix - Classification Worksheet** Modifications made to the wastewater treatment facility may cause the classification to be modified.

Operator's Name: Paul Tracy
Certification Number: 725
Certification Level: A

The listing of the operator above only signifies that staff drafting this operating permit have reviewed appropriate Department records and determined that the name listed on the operating permit application has the correct and applicable Certification Level.

Part III– Operational Monitoring

☒ - As per [10 CSR 20-9.010(4))], the facility is required to conduct operational monitoring.

Part IV – Receiving Stream Information

RECEIVING STREAM(S) TABLE: OUTFALL #001

WATER-BODY NAME	CLASS	WBID	DESIGNATED USES*	12-DIGIT HUC	DISTANCE TO CLASSIFIED SEGMENT (MI)
8-20-13 MUDD V1.0	C	3960	AQL, IRR, LWW, SCR, WBCB, HHP	10300104-0303	0.0
Clear Fork	p	935	AQL, HHP, IRR, LWW, SCR, WBCB		1.8

*As per 10 CSR 20-7.031 Missouri Water Quality Standards, the department defines the Clean Water Commission's water quality objectives in terms of "water uses to be maintained and the criteria to protect those uses." The receiving stream and 1st classified receiving stream's beneficial water uses to be maintained are in the receiving stream table in accordance with [10 CSR 20-7.031(1)(C)].

Uses which may be found in the receiving streams table, above:

10 CSR 20-7.031(1)(C)1.:

AQL = Protection of aquatic life (Current narrative use(s) are defined to ensure the protection and propagation of fish shellfish and wildlife, which is further subcategorized as: WWH = Warm Water Habitat; **CDF** = Cold-water fishery (Current narrative use is cold-water habitat.); **CLF** = Cool-water fishery (Current narrative use is cool-water habitat); EAH = Ephemeral Aquatic Habitat; MAH = Modified Aquatic Habitat; LAH = Limited Aquatic Habitat. This permit uses AQL effluent limitations in 10 CSR 20-7.031 Table A for all habitat designations unless otherwise specified.)

10 CSR 20-7.031(1)(C)2.: Recreation in and on the water

WBC = Whole Body Contact recreation where the entire body is capable of being submerged;
WBC-A = Whole body contact recreation that supports swimming uses and has public access;
WBC-B = Whole body contact recreation that supports swimming;

SCR = Secondary Contact Recreation (like fishing, wading, and boating).

10 CSR 20-7.031(1)(C)3. to 7.:
HHP (formerly HHF) = Human Health Protection as it relates to the consumption of fish;
IRR = Irrigation for use on crops utilized for human or livestock consumption;
LWW = Livestock and wildlife watering (Current narrative use is defined as LWP = Livestock and Wildlife Protection);
DWS = Drinking Water Supply;
IND = Industrial water supply

10 CSR 20-7.031(1)(C)8-11.: Wetlands (10 CSR 20-7.031 Table A currently does not have corresponding habitat use criteria for these defined uses)
WSA = Storm- and flood-water storage and attenuation; WHP = Habitat for resident and migratory wildlife species; WRC = Recreational, cultural, educational, scientific, and natural aesthetic values and uses; WHC = Hydrologic cycle maintenance.

10 CSR 20-7.031(6): **GRW** = Groundwater

MIXING CONSIDERATIONS TABLE:

MIXING ZONE (CFS) [10 CSR 20-7.031(5)(A)4.B.(I)(a)]			ZONE OF INITIAL DILUTION (CFS) [10 CSR 20-7.031(5)(A)4.B(I)(b)]		
1Q10	7Q10	30Q10	1Q10	7Q10	30Q10
0	0	0	0	0	N/A

RECEIVING STREAM MONITORING REQUIREMENTS:
No receiving water monitoring requirements recommended at this time.

Receiving Water Body's Water Quality
Discussion should include stream surveys and other pertinent water quality information

Part V – Rationale and Derivation of Effluent Limitations & Permit Conditions

ALTERNATIVE EVALUATIONS FOR NEW FACILITIES:
As per [10 CSR 20-7.015(4)(A)], discharges to losing streams shall be permitted only after other alternatives including land application, discharges to a gaining stream and connection to a regional wastewater treatment facility have been evaluated and determined to be unacceptable for environmental and/or economic reasons.

☒ - The facility does not discharge to a Losing Stream as defined by [10 CSR 20-2.010(36)] & [10 CSR 20-7.031(1)(N)], or is an existing facility.

ANTI-BACKSLIDING:
A provision in the Federal Regulations [CWA §303(d)(4); CWA §402(o); 40 CFR Part 122.44(l)] that requires a reissued permit to be as stringent as the previous permit with some exceptions.

☒ - Limitations in this operating permit for the reissuance of this permit conform to the anti-backsliding provisions of Section 402(o) of the Clean Water Act, and 40 CFR Part 122.44.

- WET testing requirements were changed from pass/fail to monitoring only for toxic units. This change reflects modifications to Missouri's Effluent Regulation found at 10 CSR 20-7.015. 40 CFR 122.44(d)(1)(ii) requiring the department to establish effluent limitations to control all parameters which have the reasonable potential to cause or contribute to an excursion above any state water quality standard, including state narrative criteria. The previous permit imposed a pass/fail limitation without collecting sufficient numerical data to conduct an analytical reasonable potential analysis. The permit writer has made a reasonable potential determination which concluded the facility does not have reasonable potential at this time but monitoring is required. Implementation of the toxic unit monitoring requirement will allow the department to effect numeric criteria in accordance with water quality standards established under §303 of the CWA.

ANTIDEGRADATION:
In accordance with Missouri's Water Quality Standard [10 CSR 20-7.031(3)], for domestic wastewater discharge with new, altered, or expanding discharges, the Department is to document by means of Antidegradation Review that the use of a water body's available assimilative capacity is justified. In accordance with Missouri's water quality regulations for antidegradation [10 CSR 20-7.031(3)], degradation may be justified by documenting the socio-economic importance of a discharge after determining the necessity of the discharge. Facilities must submit the antidegradation review request to the department prior to establishing, altering, or expanding discharges. See http://dnr.mo.gov/env/wpp/permits/antideg-implementation.htm

☒ - No degradation proposed and no further review necessary. Facility did not apply for authorization to increase pollutant loading or to add additional pollutants to their discharge.

AREA-WIDE WASTE TREATMENT MANAGEMENT & CONTINUING AUTHORITY:
As per [10 CSR 20-6.010(3)(B)], …An applicant may utilize a lower preference continuing authority by submitting, as part of the application, a statement waiving preferential status from each existing higher preference authority, providing the waiver does not conflict with any area-wide management plan approved under section 208 of the Federal Clean Water Act or any other regional sewage service and treatment plan approved for higher preference authority by the Department.

BIOSOLIDS & SEWAGE SLUDGE:
Biosolids are solid materials resulting from domestic wastewater treatment that meet federal and state criteria for beneficial uses (i.e. fertilizer). Sewage sludge is solids, semi-solids, or liquid residue generated during the treatment of domestic sewage in a treatment works; including but not limited to, domestic septage; scum or solids removed in primary, secondary, or advanced wastewater treatment process; and a material derived from sewage sludge. Sewage sludge does not include ash generated during the firing of sewage sludge in a sewage sludge incinerator or grit and screening generated during preliminary treatment of domestic sewage in a treatment works. Additional information regarding biosolids and sludge is located at the following web address: http://extension.missouri.edu/main/DisplayCategory.aspx?C=74 , items WQ422 through WQ449.

☒ - Permittee has and a Department approved biosolids management plan, and is authorized to land applies biosolids in accordance with Standard Conditions III.

COMPLIANCE AND ENFORCEMENT:
Enforcement is the action taken by the Water Protection Program (WPP) to bring an entity into compliance with the Missouri Clean Water Law, its implementing regulations, and/or any terms and conditions of an operating permit. The primary purpose of the enforcement activity in the WPP is to resolve violations and return the entity to compliance.

☒ - The facility is not currently under Water Protection Program enforcement action.

DISCHARGE MONITORING REPORTS:
On July 30, 2013, EPA proposed the Clean Water Act National Pollutant Discharge Elimination System (NPDES) Electronic Reporting Rule, which requires electronic reporting of NPDES information rather than the currently-required paper-based reports from permitted facilities. To comply with the upcoming federal rule, the Department is asking all permittees to begin submitting discharge monitoring data online. For permittees already using the Department's eDMR data reporting system, those permittees will be required to exclusively use the eDMR data reporting system.

☒ - The permittee/facility is currently using the eDMR data reporting system.

PRETREATMENT PROGRAM:
The reduction of the amount of pollutants, the elimination of pollutants, or the alteration of the nature of pollutant properties in wastewater prior to or in lieu of discharging or otherwise introducing such pollutants into a Publicly Owned Treatment Works [40 CFR Part 403.3(q)].

Pretreatment programs are required at any POTW (or combination of POTW operated by the same authority) and/or municipality with a total design flow greater than 5.0 MGD and receiving industrial wastes that interfere with or pass through the treatment works or are otherwise subject to the pretreatment standards. Pretreatment programs can also be required at POTWs/municipals with a design flow less than 5.0 MGD if needed to prevent interference with operations or pass through.

Several special conditions pertaining to the permittee's pretreatment program may be included in the permit, and are as follows:
- Implementation and enforcement of the program,
- Annual pretreatment report submittal,
- Submittal of list of industrial users,
- Technical evaluation of need to establish local limitations, and
- Submittal of the results of the evaluation

☒ - The permittee, at this time, is not required to have a Pretreatment Program or does not have an approved pretreatment program.

REASONABLE POTENTIAL ANALYSIS (RPA):
Federal regulation [40 CFR Part 122.44(d)(1)(i)] requires effluent limitations for all pollutants that are or may be discharged at a level that will cause or have the reasonable potential to cause or contribute to an in-stream excursion above narrative or numeric water quality standard.

In accordance with [40 CFR Part 122.44(d)(1)(iii)] if the permit writer determines that any given pollutant has the reasonable potential to cause, or contribute to an in-stream excursion above the WQS, the permit must contain effluent limits for that pollutant.

☒ - An RPA analysis was completed for the last permit cycle. Due to permit synchronization, the previous permit cycle was reduced to a time period of less than 5 years. Therefore, all RPA results from short term permit have been carried over to this permit

REMOVAL EFFICIENCY:

Removal efficiency is a method by which the Federal Regulations define Secondary Treatment and Equivalent to Secondary Treatment, which applies to Biochemical Oxygen Demand 5-day (BOD_5) and Total Suspended Solids (TSS) for Publicly Owned Treatment Works (POTWs)/municipals.

☒ - Secondary Treatment is 85% removal [40 CFR Part 133.102(a)(3) & (b)(3)].

SANITARY SEWER OVERFLOWS (SSO) AND INFLOW AND INFILTRATION (I&I):

Sanitary Sewer Overflows (SSOs) are defined as untreated sewage releases and are considered bypassing under state regulation [10 CSR 20-2.010(11)] and should not be confused with the federal definition of bypass. SSOs result from a variety of causes including blockages, line breaks, and sewer defects that can either allow wastewater to backup within the collection system during dry weather conditions or allow excess stormwater and groundwater to enter and overload the collection system during wet weather conditions. SSOs can also result from lapses in sewer system operation and maintenance, inadequate sewer design and construction, power failures, and vandalism. SSOs include overflows out of manholes, cleanouts, broken pipes, and other into waters of the state and onto city streets, sidewalks, and other terrestrial locations.

Inflow and Infiltration (I&I) is defined as unwanted intrusion of stormwater or groundwater into a collection system. This can occur from points of direct connection such as sump pumps, roof drain downspouts, foundation drains, and storm drain cross-connections or through cracks, holes, joint failures, faulty line connections, damaged manholes, and other openings in the collection system itself. I&I results from a variety of causes including line breaks, improperly sealed connections, cracks caused by soil erosion/settling, penetration of vegetative roots, and other sewer defects. In addition, excess stormwater and groundwater entering the collection system from line breaks and sewer defects have the potential to negatively impact the treatment facility.

Missouri RSMo §644.026.1.(13) mandates that the Department issue permits for discharges of water contaminants into the waters of this state, and also for the operation of sewer systems. Such permit conditions shall ensure compliance with all requirements as established by sections 644.006 to 644.141. Standard Conditions Part I, referenced in the permit, contains provisions requiring proper operation and maintenance of all facilities and systems of treatment and control. Missouri RSMo §644.026.1.(15) instructs the Department to require proper maintenance and operation of treatment facilities and sewer systems and proper disposal of residual waste from all such facilities. To ensure that public health and the environment are protected, any noncompliance which may endanger public health or the environment must be reported to the Department within 24 hours of the time the permittee becomes aware of the noncompliance. Standard Conditions Part I, referenced in the permit, contains the reporting requirements for the permittee when bypasses and upsets occur. The permit also contains requirements for permittees to develop and implement a program for maintenance and repair of the collection system. The permit requires that the permittee submit an annual report to the Department for the previous calendar year that contains a summary of efforts taken by the permittee to locate and eliminate sources of excess I & I, a summary of general maintenance and repairs to the collection system, and a summary of any planned maintenance and repairs to the collection system for the upcoming calendar year.

☒ - At this time, the Department recommends the US EPA's Guide for Evaluating Capacity, Management, Operation and Maintenance (CMOM) Programs At Sanitary Sewer Collection Systems (Document # EPA 305-B-05-002) or the Departments' CMOM Model located at http://dnr.mo.gov/env/wpp/permits/docs/cmom-template.doc . For additional information regarding the Departments' CMOM Model, see the CMOM Plan Model Guidance document at http://dnr.mo.gov/pubs/pub2574.htm . The CMOM identifies some of the criteria used to evaluate a collection system's management, operation, and maintenance and was intended for use by the EPA, state, regulated community, and/or third party entities. The CMOM is applicable to small, medium, and large systems; both public and privately owned; and both regional and satellite collection systems. The CMOM does not substitute for the Clean Water Act, the Missouri Clean Water Law, and both federal and state regulations, as it is not a regulation.

SCHEDULE OF COMPLIANCE (SOC):
Per 644.051.4 RSMo, a permit may be issued with a Schedule of Compliance (SOC) to provide time for a facility to come into compliance with new state or federal effluent regulations, water quality standards, or other requirements. Such a schedule is not allowed if the facility is already in compliance with the new requirement, or if prohibited by other statute or regulation. A SOC includes an enforceable sequence of interim requirements (actions, operations, or milestone events) leading to compliance with the Missouri Clean Water Law, its implementing regulations, and/or the terms and conditions of an operating permit. *See also* Section 502(17) of the Clean Water Act, and 40 CFR §122.2. For new effluent limitations, the permit includes interim monitoring for the specific parameter to demonstrate the facility is not already in compliance with the new requirement. Per 40 CFR § 122.47(a)(1) and 10 CSR 20-7.031(11), compliance must occur as soon as possible. If the permit provides a schedule for meeting new water quality based effluent limits, a SOC must include an enforceable, final effluent limitation in the permit even if the SOC extends beyond the life of the permit.

A SOC is not allowed:

- For effluent limitations based on technology-based standards established in accordance with federal requirements, if the deadline for compliance established in federal regulations has passed. 40 CFR § 125.3.
- For a newly constructed facility in most cases. Newly constructed facilities must meet applicable effluent limitations when discharge begins, because the facility has installed the appropriate control technology as specified in a permit or antidegradation review. A SOC is allowed for a new water quality based effluent limit that was not included in a previously public noticed permit or antidegradation review, which may occur if a regulation changes during construction.
- To develop a TMDL, UAA, or other study associated with development of a site specific criterion. A facility is not prohibited from conducting these activities, but a SOC may not be granted for conducting these activities.

In order to provide guidance to Permit Writers in developing SOCs, and attain a greater level of consistency, on April 9, 2015 the Department issued an updated policy on development of SOCs. This policy provides guidance to Permit Writers on the standard time frames for schedules for common activities, and guidance on factors that may modify the length of the schedule such as a Cost Analysis for Compliance.

☒ - This permit does not contain a SOC.

SEWER EXTENSION AUTHORITY SUPERVISED PROGRAM:
In accordance with [10 CSR 20-6.010(6)(A)], the department may grant approval of a permittee's Sewer Extension Authority Supervised Program. These approved permittees regulate and approve construction of sanitary sewers and pump stations, which are tributary to this wastewater treatment facility. The permittee shall act as the continuing authority for the operation, maintenance, and modernization of the constructed collection system. See http://dnr.mo.gov/env/wpp/permits/sewer-extension.htm.

☒ - The permittee does not have a department approved Sewer Extension Authority Supervised Program.

STORMWATER POLLUTION PREVENTION PLAN (SWPPP):
In accordance with 40 CFR 122.44(k) *Best Management Practices (BMPs)* to control or abate the discharge of pollutants when: (1) Authorized under section 304(e) of the Clean Water Act (CWA) for the control of toxic pollutants and hazardous substances from ancillary industrial activities: (2) Authorized under section 402(p) of the CWA for the control of stormwater discharges; (3) Numeric effluent limitations are infeasible; or (4) the practices are reasonably necessary to achieve effluent limitations and standards or to carry out the purposes and intent of the CWA.

In accordance with the EPA's *Developing Your Stormwater Pollution Prevention Plan, A Guide for Industrial Operators*, (Document number EPA 833-B-09-002) [published by the United States Environmental Protection Agency (USEPA) in February 2009], BMPs are measures or practices used to reduce the amount of pollution entering (regarding this operating permit) waters of the state. BMPs may take the form of a process, activity, or physical structure.

Additionally in accordance with the Stormwater Management, a SWPPP is a series of steps and activities to (1) identify sources of pollution or contamination, and (2) select and carry out actions which prevent or control the pollution of stormwater discharges. The purpose of a SWPPP is to comply with all applicable stormwater regulations by creating an adaptive management plan to control and mitigate stream pollution from stormwater runoff. Developing a SWPPP provides opportunities to employ appropriate BMPs to minimize the risk of pollutants being discharged during storm events. The following paragraph outlines the general steps the permittee should take to determine which BMPs will work to achieve the benchmark values or limits in the permit. This section is not intended to be all encompassing or restrict the use of any physical BMP or operational and maintenance procedure assisting in pollution control. Additional steps or revisions to the SWPPP may be required to meet the requirements of the permit.

Areas which should be included in the SWPPP are identified in 40 CFR 122.26(b)(14). Once the potential sources of stormwater pollution have been identified, a plan should be formulated to best control the amount of pollutant being released and discharged by each activity or source. This should include, but is not limited to, minimizing exposure to stormwater, good housekeeping measures, proper facility and equipment maintenance, spill prevention and response, vehicle traffic control, and proper materials handling. Once a plan has been developed the facility will employ the control measures determined to be adequate to achieve the benchmark values discussed above. The facility will conduct monitoring and inspections of the BMPs to ensure they are working properly and re-evaluate any BMP not achieving compliance with permitting requirements. For example, if sample results from an outfall show values of TSS above the benchmark value, the BMP being employed is deficient in controlling stormwater pollution. Corrective action should be taken to repair, improve, or replace the failing BMP. This internal evaluation is required at least once per month but should be continued more frequently if BMPs continue to fail. If failures do occur, continue this trial and error process until appropriate BMPs have been established.

For new, altered, or expanded stormwater discharges, the SWPPP shall identify reasonable and effective BMPs while accounting for environmental impacts of varying control methods. The antidegradation analysis must document why no discharge or no exposure options are not feasible. The selection and documentation of appropriate control measures shall serve as an alternative analysis of technology and fulfill the requirements of antidegradation [10 CSR 20-7.031(3)]. Failure to implement and maintain the chosen BMP is a permit violation. For further guidance, consult the antidegradation implementation procedure (http://dnr.mo.gov/env/wpp/docs/AIP050212.pdf).

Alternative Analysis (AA) evaluation of the BMPs is a structured evaluation of BMPs that are reasonable and cost effective. The AA evaluation should include practices that are designed to be: 1) non-degrading; 2) less degrading; or 3) degrading water quality. The glossary of AIP defines these three terms. The chosen BMP will be the most reasonable and effective management strategy while ensuring the highest statutory and regulatory requirements are achieved and the highest quality water attainable for the facility is discharged. The AA evaluation must demonstrate why “no discharge” or “no exposure” is not a feasible alternative at the facility. This structured analysis of BMPs serves as the antidegradation review, fulfilling the requirements of 10 CSR 20-7.031(3) Water Quality Standards and *Antidegradation Implementation Procedure* (AIP), Section II.B.

If parameter-specific numeric exceedances continue to occur and the permittee feels there are no practicable or cost-effective BMPs which will sufficiently reduce a pollutant concentration in the discharge to the benchmark values established in the permit, the permittee can submit a request to re-evaluate the benchmark values. This request needs to include 1) a detailed explanation of why the facility is unable to comply with the permit conditions and unable to establish BMPs to achieve the benchmark values; 2) financial data of the company and documentation of cost associated with BMPs for review and 3) the SWPPP, which should contain adequate documentation of BMPs employed, failed BMPs, corrective actions, and all other required information. This will allow the department to conduct a cost analysis on control measures and actions taken by the facility to determine cost-effectiveness of BMPs. The request shall be submitted in the form of an operating permit modification; the application is found at: http://dnr.mo.gov/forms/index.html.

☒ - 10 CSR 20-6.200 and 40 CFR 122.26 includes treatment works treating domestic sewage or any other sewage sludge or wastewater treatment device or system, used in the storage treatment, recycling, and reclamation of municipal or domestic sewage, including land dedicated to the disposal of sewage sludge that is located within the confines of the facility, with a design flow of 1.0 mgd or more, or are required to have an approved pretreatment program under 40 CFR part 403, as an industrial activity in which permit coverage is required.

In lieu of requiring sampling in the site-specific permit, the facility is required to develop and implement a Stormwater Pollution Prevention Plan. A facility can apply for conditional exclusion for “no exposure” of industrial activities and materials to stormwater by submitting to the Department a completed NPDES Form 3510-11 – No Exposure Certification for Exclusion from NPDES Stormwater Permitting. That document and additional information may be found at http://water.epa.gov/polwaste/npdes/stormwater/Conditional-No-Exposure-Exclusion.cfm. Upon approval of the “No Exposure”, the permit can be modified to remove the SWPPP requirements. If the facility chooses to retain the conditional exclusion for “no exposure”, the facility is required to renew the “No Exposure” exemption during the permit renewal period by submitting NPDES Form 3510-11 with Form B2.

☒ - A SWPPP shall be developed and implemented for each site and shall incorporate required practices identified by the Department with jurisdiction, incorporate erosion control practices specific to site conditions, and provide for maintenance and adherence to the plan.

VARIANCE:
As per the Missouri Clean Water Law § 644.061.4, variances shall be granted for such period of time and under such terms and conditions as shall be specified by the commission in its order. The variance may be extended by affirmative action of the commission. In no event shall the variance be granted for a period of time greater than is reasonably necessary for complying with the Missouri Clean Water Law §§644.006 to 644.141 or any standard, rule or regulation promulgated pursuant to Missouri Clean Water Law §§644.006 to 644.141.

☒ - This operating permit is not drafted under premises of a petition for variance.

WASTELOAD ALLOCATIONS (WLA) FOR LIMITS:
As per [10 CSR 20-2.010(78)], the amount of pollutant each discharger is allowed by the Department to release into a given stream after the Department has determined total amount of pollutant that may be discharged into that stream without endangering its water quality.

☒ - Wasteload allocations were calculated where applicable using water quality criteria or water quality model results and the dilution equation below:

$$Ce = \frac{(Qe + Qs)C - (Qs \times Cs)}{(Qe)}$$ (EPA/505/2-90-001, Section 4.5.5)

Where C = downstream concentration Ce = effluent concentration
Cs = upstream concentration Qe = effluent flow
Qs = upstream flow

Chronic wasteload allocations were determined using applicable chronic water quality criteria (CCC: criteria continuous concentration) and stream volume of flow at the edge of the mixing zone (MZ). Acute wasteload allocations were determined using applicable water quality criteria (CMC: criteria maximum concentration) and stream volume of flow at the edge of the zone of initial dilution (ZID).

Water quality based maximum daily and average monthly effluent limitations were calculated using methods and procedures outlined in USEPA's "Technical Support Document For Water Quality-based Toxics Control" (EPA/505/2-90-001).

Number of Samples "n":
Additionally, in accordance with the TSD for water quality-based permitting, effluent quality is determined by the underlying distribution of daily values, which is determined by the Long Term Average (LTA) associated with a particular Wasteload Allocation (WLA) and by the Coefficient of Variation (CV) of the effluent concentrations. Increasing or decreasing the monitoring frequency does not affect this underlying distribution or treatment performance, which should be, at a minimum, be targeted to comply with the values dictated by the WLA. Therefore, it is recommended that the actual planned frequency of monitoring normally be used to determine the value of "n" for calculating the AML. However, in situations where monitoring frequency is once per month or less, a higher value for "n" must be assumed for AML derivation purposes. Thus, the statistical procedure being employed using an assumed number of samples is "n = 4" at a minimum. For Total Ammonia as Nitrogen, "n = 30" is used

WLA MODELING:
There are two general types of effluent limitations, technology-based effluent limits (TBELs) and water quality based effluent limits (WQBELs). If TBELs do not provide adequate protection for the receiving waters, then WQBEL must be used.

☒ - A WLA study was either not submitted or determined not applicable by Department staff.

WATER QUALITY STANDARDS:
Per [10 CSR 20-7.031(4)], General Criteria shall be applicable to all waters of the state at all times including mixing zones. Additionally, [40 CFR 122.44(d)(1)] directs the Department to establish in each NPDES permit to include conditions to achieve water quality established under Section 303 of the Clean Water Act, including State narrative criteria for water quality.

WHOLE EFFLUENT TOXICITY (WET) TEST:

☒ - The permittee is required to conduct WET test for this facility.

A WET test is a quantifiable method of determining if a discharge from a facility may be causing toxicity to aquatic life by itself, in combination with or through synergistic responses when mixed with receiving stream water.

Under the federal Clean Water Act (CWA) §101(a)(3), requiring WET testing is reasonably appropriate for site-specific Missouri State Operating Permits for discharges to waters of the state issued under the National Pollutant Discharge Elimination System (NPDES). WET testing is also required by 40 CFR 122.44(d)(1). WET testing ensures that the provisions in the 10 CSR 20-6.010(8)(A)7. and the Water Quality Standards 10 CSR 20-7.031(4)(D),(F),(G),(I)2.A & B are being met. Under [10 CSR 20-6.010(8)(A)4], the Department may require other terms and conditions that it deems necessary to assure compliance with the Clean Water Act and related regulations of the Missouri Clean Water Commission. In addition the following MCWL apply: §§§644.051.3 requires the Department to set permit conditions that comply with the MCWL and CWA; 644.051.4 specifically references toxicity as an item we must consider in writing permits (along with water quality-based effluent limits, pretreatment, etc…); and 644.051.5 is the basic authority to require testing conditions. WET test will be required by facilities meeting the following criteria:

- ☒ Facility is a designated Major.
- ☐ Facility continuously or routinely exceeds its design flow.
- ☐ Facility that exceeds its design population equivalent (PE) for BOD_5 whether or not its design flow is being exceeded.
- ☐ Facility (whether primarily domestic or industrial) that alters its production process throughout the year.
- ☐ Facility handles large quantities of toxic substances, or substances that are toxic in large amounts.
- ☐ Facility has Water Quality-based Effluent Limitations for toxic substances (other than NH_3)
- ☐ Facility is a municipality with a Design Flow $\geq$ 22,500 gpd.
- ☐ Other – please justify.

40 CFR 122.41(M) - BYPASSES:

The federal Clean Water Act (CWA), Section 402 prohibits wastewater dischargers from "bypassing" untreated or partially treated sewage (wastewater) beyond the headworks. A bypass is defined as an intentional diversion of waste streams from any portion of a treatment facility, [40 CFR 122.41(m)(1)(i)]. Additionally, Missouri regulation 10 CSR 20-7.015(9)(G) states a bypass means the intentional diversion of waste streams from any portion of a treatment facility, except in the case of blending, to waters of the state. Only under exceptional and specified limitations do the federal regulations allow for a facility to bypass some or all of the flow from its treatment process. Bypasses are prohibited by the CWA unless a permittee can meet all of the criteria listed in 40 CFR 122.41(m)(4)(i)(A), (B), & (C). Any bypasses from this facility are subject to the reporting required in 40 CFR 122.41(l)(6) and per Missouri's Standard Conditions I, Section B, part 2.b. Additionally, Anticipated Bypasses include bypasses from peak flow basins or similar devices designed for peak wet weather flows.

☒ - This facility does not anticipate bypassing.

303(d) LIST & TOTAL MAXIMUM DAILY LOAD (TMDL):

Section 303(d) of the federal Clean Water Act requires that each state identify waters that are not meeting water quality standards and for which adequate water pollution controls have not been required. Water quality standards protect such beneficial uses of water as whole body contact (such as swimming), maintaining fish and other aquatic life, and providing drinking water for people, livestock and wildlife. The 303(d) list helps state and federal agencies keep track of waters that are impaired but not addressed by normal water pollution control programs.

A TMDL is a calculation of the maximum amount of a given pollutant that a body of water can absorb before its water quality is affected. If a water body is determined to be impaired as listed on the 303(d) list, then a watershed management plan will be developed that shall include the TMDL calculation

☒ - This facility does not discharge to a 303(d) listed stream.

Part VI –2013 Water Quality Criteria for Ammonia

Upcoming changes to the Water Quality Standard for ammonia may require significant upgrades to wastewater treatment facilities.

On August 22, 2013, the U.S. Environmental Protection Agency (EPA) finalized new water quality criteria for ammonia, based on toxicity studies of mussels and gill breathing snails. Missouri's current ammonia criteria are based on toxicity testing of several species, but did not include data from mussels or gill breathing snails. Missouri is home to 69 of North America's mussel species, which are spread across the state. According to the Missouri Department of Conservation nearly two-thirds of the mussel species in Missouri are considered to be "of conservation concern". Nine species are listed as federally endangered, with an additional species currently proposed as endangered and another species proposed as threatened.

The adult forms of mussels that are seen in rivers, lakes, and streams are sensitive to pollutants because they are sedentary filter feeders. They vacuum up many pollutants with the food they bring in and cannot escape to new habitats, so they can accumulate toxins in their bodies and die. But very young mussels, called glochidia, are exceptionally sensitive to ammonia in water. As a result of a citizen suit, the EPA was compelled to conduct toxicity testing and develop ammonia water quality criteria that would be protective if young mussels may be present in a waterbody. These new criteria will apply to any discharge with ammonia levels that may pose a reasonable potential to violate the standards. Nearly all discharging domestic wastewater treatment facilities (cities, subdivisions, mobile home parks, etc.), as well as certain industrial and stormwater dischargers with ammonia in their effluent, will be affected by this change in the regulations.

When new water quality criteria are established by the EPA, states must adopt them into their regulations in order to keep their authorization to issue permits under the National Pollutant Discharge Elimination System (NPDES). States are required to review their water quality standards every three years, and if new criteria have been developed they must be adopted. States may be more protective than the Federal requirements, but not less protective. Missouri does not have the resources to conduct the studies necessary for developing new water quality standards, and therefore our standards mirror those developed by the EPA; however, we will utilize any available flexibility based on actual species of mussels that are native to Missouri and their sensitivity to ammonia.

Many treatment facilities in Missouri are currently scheduled to be upgraded to comply with the current water quality standards. But these new ammonia standards may require a different treatment technology than the one being considered by the permittee. It is important that permittees discuss any new and upcoming requirements with their consulting engineers to ensure that their treatment systems are capable of complying with the new requirements. The Department encourages permittees to construct treatment technologies that can attain effluent quality that supports the EPA ammonia criteria.

Ammonia toxicity varies by temperature and by pH of the water. Assuming a stable pH value, but taking into account winter and summer temperatures, Missouri includes two seasons of ammonia effluent limitations. Current effluent limitations in this permit are:

Summer – 4.5 mg/L daily maximum, 1.3 mg/L monthly average.
Winter – 7.0 mg/L daily maximum, 2.9 mg/L monthly average.

Under the new EPA criteria, where mussels of the family Unionidae are present or expected to be present, the <u>estimated</u> effluent limitations for a facility in a location such as this that discharges to a receiving stream with no mixing consideration listed in Part IV of the Fact Sheet will be:

Summer – 1.7 mg/L daily maximum, 0.6 mg/L monthly average.
Winter – 5.6 mg/L daily maximum, 2.1 mg/L monthly average.

These estimated limits above are based in part on the actual performance of the plant at the time of the drafting of this permit and should not be construed as future effluent limitations. Future effluent limits, based on the EPA's 2013 water quality criteria for ammonia, will depend in part on the actual performance of the facility at the time the permit is renewed.

Operating permits for facilities in Missouri must be written based on current statutes and regulations. Therefore permits will be written with the existing effluent limitations until the new standards are adopted. To aid permittees in decision making, an advisory will be added to permit Fact Sheets notifying permittees of the expected effluent limitations for ammonia. When setting schedules of compliance for ammonia effluent limitations, consideration will be given to facilities that have recently constructed upgraded facilities to meet the current ammonia limitations.

For more information on this topic feel free to contact the Missouri Department of Natural Resources, Water Protection Program, Water Pollution Control Branch, Operating Permits Section at (573) 751-1300.

Part VII – Effluent Limits Determination

APPLICABLE DESIGNATIONS OF WATERS OF THE STATE:
As per Missouri's Effluent Regulations [10 CSR 20-7.015], the waters of the state are divided into the below listed seven (7) categories. Each category lists effluent limitations for specific parameters, which are presented in each outfall's Effluent Limitation Table and further discussed in the Derivation & Discussion of Limits section.

- ☐ Missouri or Mississippi River [10 CSR 20-7.015(2)]
- ☐ Lake or Reservoir [10 CSR 20-7.015(3)]
- ☐ Losing [10 CSR 20-7.015(4)]
- ☐ Subsurface Water [10 CSR 20-7.015(7)]
- ☒ All Other Waters [10 CSR 20-7.015(8)]
- ☐ Metropolitan No-Discharge [10 CSR 20-7.015(5)]

OUTFALL #001 – MAIN FACILITY OUTFALL

Effluent limitations derived and established in the below Effluent Limitations Table are based on current operations of the facility. Future permit action due to facility modification may contain new operating permit terms and conditions that supersede the terms and conditions, including effluent limitations, of this operating permit.

EFFLUENT LIMITATIONS TABLE:

PARAMETER	Unit	Basis for Limits	Daily Maximum	Weekly Average	Monthly Average	Previous Permit Limit	Sampling Frequency	Reporting Frequency	Sample Type ****
Flow	MGD	1	*		*	*/*	1/week-days	monthly	T
BOD_5	mg/L	1		15	10	15/10	1/week	monthly	C
TSS	mg/L	1		20	15	20/15	1/week	monthly	C
Escherichia coli **	#/100mL	1, 3	1030		206	***	1/week	monthly	G
Ammonia as N (Apr 1 –Sep 30)	mg/L	2, 3	4.5		1.3	4.5/1.3	1/week	monthly	G
Ammonia as N (Oct 1 – Mar 31)	mg/L	2, 3	7.0		2.9	7.0/2.9	1/week	monthly	G
Oil & Grease	mg/L	1, 3	15		10	15/10	1/quarter	quarterly	G
Cyanide, Amendable to Chlorine	µg/L	2, 3	*		*	*/*	1/quarter	quarterly	G
Cadmium, Total Recoverable	µg/L	2, 3	*		*	*/*	1/quarter	quarterly	G
Chromium (VI), Total Recoverable	µg/L	2, 3	*		*	*/*	1/quarter	quarterly	G
Copper, Total Recoverable	µg/L	2, 3	*		*	*/*	1/quarter	quarterly	G
Lead, Total Recoverable	µg/L	2, 3	*		*	*/*	1/quarter	quarterly	G
Nickel, Total Recoverable	µg/L	2, 3	*		*	*/*	1/quarter	quarterly	G
Silver, Total Recoverable	µg/L	2, 3	*		*	*/*	1/quarter	quarterly	G
Zinc, Total Recoverable	µg/L	2, 3	*		*	*/*	1/quarter	quarterly	G
Phenol, Total Recoverable	µg/L	2, 3	*		*	*/*	1/quarter	quarterly	G
Total Nitrogen	mg/L	1	*		*	***	1/quarter	quarterly	G
Total Phosphorus	mg/L	1	*		*	***	1/quarter	quarterly	G
Acute Whole Effluent Toxicity	TUa	1, 9	*			Pass/ Fail	1/year	annually	C
Chronic Whole Effluent Toxicity	TUa	1, 9	*			***	1/permit cycle	1/permit cycle	C
PARAMETER	Unit	Basis for Limits	Minimum		Maximum	Previous Permit Limit	Sampling Frequency	Reporting Frequency	Sample Type
pH	SU	1	6.5		9.0	6.5/9.0	1/week	monthly	G

* - Monitoring requirement only.
** - #/100mL; the Monthly Average for *E. coli* is a geometric mean.
*** - Parameter not previously established in previous state operating permit.

**** - C = 24-hour composite
G = Grab
T = 24-hr. total
E = 24-hr. estimate

Basis for Limitations Codes:
1. State or Federal Regulation/Law
2. Water Quality Standard (includes RPA)
3. Water Quality Based Effluent Limits
4. Antidegradation Review
5. Antidegradation Policy
6. Water Quality Model
7. Best Professional Judgment
8. TMDL or Permit in lieu of TMDL
9. WET Test Policy
10. Multiple Discharger Variance

OUTFALL #001 – DERIVATION AND DISCUSSION OF LIMITS:

- **Flow**. In accordance with [40 CFR Part 122.44(i)(1)(ii)] the volume of effluent discharged from each outfall is needed to assure compliance with permitted effluent limitations. If the permittee is unable to obtain effluent flow, then it is the responsibility of the permittee to inform the Department, which may require the submittal of an operating permit modification.

- **Biochemical Oxygen Demand (BOD_5)**. Effluent limitations have been retained from previous state operating permit, please see the **WLA MODELING,** Subsection of **Part V- Rationale and Derivation of Effluent Limitations & Permit Conditions.**

- **Total Suspended Solids (TSS** Effluent limitations have been retained from previous state operating permit, please see the **WLA MODELING,** Subsection of **Part V- Rationale and Derivation of Effluent Limitations & Permit Conditions.**

- ***Escherichia coli (E. coli)***. Monthly average of 206 per 100 mL as a geometric mean and Weekly Average of 1030 per 100 mL as a geometric mean during the recreational season (April 1 – October 31), to protect Whole Body Contact Recreation (B) designated use of the receiving stream, as per 10 CSR 20-7.031(5)(C). An effluent limit for both monthly average and weekly average is required by 40 CFR 122.45(d). The Geometric Mean is calculated by multiplying all of the data points and then taking the nth root of this product, where n = # of samples collected. For example: Five E. coli samples were collected with results of 1, 4, 6, 10, and 5 (#/100mL). Geometric Mean = 5th root of (1)(4)(6)(10)(5) = 5th root of 1,200 = 4.1 #/100mL. Disinfection requirements are applicable year round when diverted for irrigation purposes.

- **Total Ammonia Nitrogen**. Effluent limitations have been retained from previous operating permit as the previous permit cycle was less than 5 years due to permit synchronization

Early Life Stages Present Total Ammonia Nitrogen criteria apply [10 CSR 20-7.031(4)(B)7.C. & Table B3] default pH 7.8 SU. No mixing considerations allowed; therefore, WLA = appropriate criterion.

Season	Temp (^oC)	pH (SU)	Total Ammonia Nitrogen CCC (mg/L)	Total Ammonia Nitrogen CMC (mg/L)
Summer	26	7.8	1.5	12.1
Winter	6	7.8	3.1	12.1

Summer: April 1 – September 30
Chronic WLA: C_e = 1.5 mg/L

Acute WLA: C_e = 12.1 mg/L

LTA_c = 1.5 mg/L (0.703) = 1.05 mg/L [CV =0.86, 99th Percentile, 30 day avg.]
LTA_a = 12.1 mg/L (0.233) = 2.82 mg/L [CV =0.86, 99th Percentile]

Use most protective number of LTA_c or LTA_a.

MDL = 1.05 mg/L (4.29) = 4.5 mg/L [CV =0.86, 99th Percentile]
AML = 1.05 mg/L (1.28) = 1.3 mg/L [CV =0.86, 95th Percentile, n =30]

Winter: October 1 – March 31
Chronic WLA: C_e = 3.1 mg/L

Acute WLA: C_e = 12.1 mg/L

LTA_c = 3.1 mg/L (0.803) = 2.49 mg/L [CV =0.53, 99th Percentile, 30 day avg.]
LTA_a = 12.1 mg/L (0.357) = 4.32 mg/L [CV =0.53, 99th Percentile]

Use most protective number of LTA_c or LTA_a.

MDL = 2.49 mg/L (2.80) = 7.0 mg/L [CV =0.53, 99th Percentile]
AML = 2.49 mg/L (1.17) = 2.9 mg/L [CV =0.53, 95th Percentile, n =30]

- **Oil & Grease**. Conventional pollutant, effluent limitation for protection of aquatic life; 10 mg/L monthly average, 15 mg/L daily maximum.

- **Total Phosphorus and Total Nitrogen**. Monitoring required for facilities greater than 100,000 gpd design flow per 10 CSR 20-7.015(9)(D)7. Total Nitrogen shall be determined by testing for Total Kjeldahl Nitrogen (TKN) and Nitrate + Nitrite and reporting the sum of the results (reported as N). Nitrate + Nitrite can be analyzed together or separately.

- **pH**. –6.5-9.0 SU. pH limitations of 6.0-9.0 SU [10 CSR 20-7.015] are not protective of the in-stream Water Quality Standard, which states that water contaminants shall not cause pH to be outside the range of 6.5-9.0 SU. No mixing zone is allowed due to the classification of the receiving stream, therefore the water quality standard must be met at the outfall.

- **Cyanide, Amenable to Chlorination. Cadmium, Total Recoverable Chromium, Total Recoverable. Copper, Total Recoverable. Lead, Total Recoverable. Nickel, Total Recoverable. Silver, Total Recoverable. Zinc, Total Recoverable. Phenol, Total Recoverable.** Effluent limitations have been retained from previous operating permit as the previous permit cycle was less than 5 years due to permit synchronization. A reasonable potential analysis was conducted during the previous permit cycle and it was determined at the time no reasonable potential to violate water quality standards exists.

Whole Effluent Toxicity

- **Acute Whole Effluent Toxicity**. Monitoring requirement only. Monitoring is required to determine if reasonable potential exists for this facility's discharge to exceed water quality standards.
  Acute and/or Chronic Allowable Effluent Concentrations (AECs) for facilities that discharge to Waters of the State lacking designated uses, Class C, Class P (with default Mixing Considerations), or Lakes [10 CSR 20-7.031(5)(A)4.B.(IV)(b)] are 100%, 50%, 25%, 12.5%, & 6.25%.

- **Chronic Whole Effluent Toxicity**. Monitoring requirement only. Monitoring is required to determine if reasonable potential exists for this facility's discharge to exceed water quality standards.

  Acute and/or Chronic Allowable Effluent Concentrations (AECs) for facilities that discharge to Waters of the State lacking designated uses, Class C, Class P (with default Mixing Considerations), or Lakes [10 CSR 20-7.031(5)(A)4.B.(IV)(b)] are 100%, 50%, 25%, 12.5%, & 6.25%.

Sampling Frequency Justification:

Sampling and Reporting Frequency was retained from previous permit. Weekly sampling is required for *E. coli*, per 10 CSR 20-7.015(9)(D)6.A.

WET Test Sampling Frequency Justification. WET Testing schedules and intervals are established in accordance with the Department's Permit Manual; Section 5.2 *Effluent Limits / WET Testing for Compliance Bio-monitoring.* It is recommended that WET testing be conducted during the period of lowest stream flow.

Acute Whole Effluent Toxicity

☒ - No less than **ONCE/YEAR:**
- ☒ -Facility is designated as a Major facility or has a design flow ≥ 1.0 MGD.
- ☐ - Facility incorporates a pretreatment program and dilution of the receiving stream is 100x or greater.
- ☐ - Facility continuously or routinely exceeds their design flow.
- ☐ -Facility exceeds its design population equivalent (PE) for BOD_5 whether or not its design flow is being exceeded.
- ☐ -Facility has Water Quality-based effluent limitations for toxic substances (other than NH_3).

Chronic Whole Effluent Toxicity

☒ -No less than **ONCE/PERMIT CYCLE:**
- ☒ -POTW facilities with a design flow of greater than 1.0 million gallons per day, but less than 10 million gallons per day, shall conduct and submit to the Department a chronic WET test no less than once per five years.

Sampling Type Justification:

As per 10 CSR 20-7.015, BOD_5, TSS, and WET test samples collected for mechanical plants shall be a 24 hour composite sample. Grab samples, however, must be collected for pH, Ammonia as N, *E. coli* , Oil & Grease, Total Phosphorus, Cyanide, Cadmium, Chromium, Copper, Lead, Nickel, Silver, Zinc, and Phenol. This is due to the holding time restriction for *E. coli*, the volatility of Ammonia and TRC, and the fact that pH and DO cannot be preserved and must be sampled in the field. As Ammonia, Oil & Grease, samples must be immediately preserved; these samples are to be collected as a grab.

Part VIII – Cost Analysis for Compliance

Pursuant to Section 644.145, RSMo, when issuing permits under this chapter that incorporate a new requirement for discharges from publicly owned combined or separate sanitary or storm sewer systems or publicly owned treatment works, or when enforcing provisions of this chapter or the Federal Water Pollution Control Act, 33 U.S.C. 1251 et seq., pertaining to any portion of a publicly owned combined or separate sanitary or storm sewer system or [publicly owned] treatment works, the Department of Natural Resources shall make a "finding of affordability" on the costs to be incurred and the impact of any rate changes on ratepayers upon which to base such permits and decisions, to the extent allowable under this chapter and the Federal Water Pollution Control Act. This process is completed through a cost analysis for compliance. Permits that do not include new requirements may be deemed affordable.

☒ - The Department is not required to determine Cost Analysis for Compliance because the permit contains no new conditions or requirements that convey a new cost to the facility.

Part IX – Administrative Requirements

On the basis of preliminary staff review and the application of applicable standards and regulations, the Department, as administrative agent for the Missouri Clean Water Commission, proposes to issue a permit(s) subject to certain effluent limitations, schedules, and special conditions contained herein and within the operating permit. The proposed determinations are tentative pending public comment.

PERMIT SYNCHRONIZATION:
The Department of Natural Resources is currently undergoing a synchronization process for operating permits. Permits are normally issued on a five-year term, but to achieve synchronization many permits will need to be issued for less than the full five years allowed by regulation. The intent is that all permits within a watershed will move through the Watershed Based Management (WBM) cycle together will all expire in the same fiscal year. This will allow further streamlining by placing multiple permits within a smaller geographic area on public notice simultaneously, thereby reducing repeated administrative efforts. This will also allow the Department to explore a watershed based permitting effort at some point in the future. Renewal applications must continue to be submitted within 180 days of expiration, however, in instances where effluent data from the previous renewal is less than 4 years old, that data may be re-submitted to meet the requirements of the renewal application. If the permit provides a schedule of compliance for meeting new water quality based effluent limits beyond the expiration date of the permit, the time remaining in the schedule of compliance will be allotted in the renewed permit.

PUBLIC NOTICE:
The Department shall give public notice that a draft permit has been prepared and its issuance is pending. Additionally, public notice will be issued if a public hearing is to be held because of a significant degree of interest in and water quality concerns related to a draft permit. No public notice is required when a request for a permit modification or termination is denied; however, the requester and permittee must be notified of the denial in writing. The Department must issue public notice of a pending operating permit or of a new or reissued statewide general permit. The public comment period is the length of time not less than 30 days following the date of the public notice which interested persons may submit written comments about the proposed permit. For persons wanting to submit comments regarding this proposed operating permit, then please refer to the Public Notice page located at the front of this draft operating permit. The Public Notice page gives direction on how and where to submit appropriate comments.

☒ - The Public Notice period for this operating permit was from December 16 2016 to January 17 2017. Responses to the Public Notice of this operating permit did not warrant the modification of effluent limits and/or the terms and conditions of this permit. On Page 1 of the permit "Airforce" has been corrected to "Air Force" for both owner and facility name. Under "Classification" worksheet the "Activated Sludge" classification has been removed as it is not applicable and "Biological" for secondary treatment has been added. These changes did not modify the A level operator classification on the public notice draft.

DATE OF FACT SHEET: 09/02/2016

COMPLETED BY:

SHAWN MASSEY, ENVIRONMENTAL SPECIALIST
MISSOURI DEPARTMENT OF NATURAL RESOURCES
WATER PROTECTION PROGRAM
OPERATING PERMITS SECTION - DOMESTIC WASTEWATER UNIT
(573) 751-1399
Shawn.massey@dnr.mo.gov

Appendices

APPENDIX - CLASSIFICATION WORKSHEET:

ITEM	POINTS POSSIBLE	POINTS ASSIGNED
Maximum Population Equivalent (P.E.) served (Max 10 pts.)	1 pt./10,000 PE or major fraction thereof.	1
Maximum: 10 pt Design Flow (avg. day) or peak month; use greater (Max 10 pts.)	1 pt. / MGD or major fraction thereof.	2
EFFLUENT DISCHARGE RECEIVING WATER SENSITIVITY:		
Missouri or Mississippi River	0	
All other stream discharges except to losing streams and stream reaches supporting whole body contact	1	
Discharge to lake or reservoir outside of designated whole body contact recreational area	2	
Discharge to losing stream, or stream, lake or reservoir area supporting whole body contact recreation	3	3
PRELIMINARY TREATMENT - Headworks		
Screening and/or comminution	3	3
Grit removal	3	
Plant pumping of main flow (lift station at the headworks)	3	
PRIMARY TREATMENT		
Primary clarifiers	5	5
Combined sedimentation/digestion	5	
Chemical addition (except chlorine, enzymes)	4	
REQUIRED LABORATORY CONTROL – performed by plant personnel (highest level only)		
Push – button or visual methods for simple test such as pH, Settleable solids	3	
Additional procedures such as DO, COD, BOD, titrations, solids, volatile content	5	
More advanced determinations such as BOD seeding procedures, fecal coliform, nutrients, total oils, phenols, etc.	7	7
Highly sophisticated instrumentation, such as atomic absorption and gas chromatograph	10	
ALTERNATIVE FATE OF EFFLUENT		
Direct reuse or recycle of effluent	6	
Land Disposal – low rate	3	
High rate	5	
Overland flow	4	
Total from page **ONE (1)**	----	21

APPENDIX - CLASSIFICATION WORKSHEET (CONTINUED):

ITEM	POINTS POSSIBLE	POINTS ASSIGNED
VARIATION IN RAW WASTE (highest level only) (DMR exceedances and Design Flow exceedances)		
Variation do not exceed those normally or typically expected	0	0
Recurring deviations or excessive variations of 100 to 200 % in strength and/or flow	2	
Recurring deviations or excessive variations of more than 200 % in strength and/or flow	4	
Raw wastes subject to toxic waste discharge	6	
SECONDARY TREATMENT		
Trickling filter and other fixed film media with secondary clarifiers	10	10
Activated sludge with secondary clarifiers (including extended aeration and oxidation ditches)	15	
Stabilization ponds without aeration	5	
Aerated lagoon	8	
Advanced Waste Treatment Polishing Pond	2	
Chemical/physical – without secondary	15	
Chemical/physical – following secondary	10	
Biological or chemical/biological	12	12
Carbon regeneration	4	
DISINFECTION		
Chlorination or comparable	5	
Dechlorination	2	
On-site generation of disinfectant (except UV light)	5	
UV light	4	4
SOLIDS HANDLING - SLUDGE		
Solids Handling Thickening	5	
Anaerobic digestion	10	10
Aerobic digestion	6	
Evaporative sludge drying	2	2
Mechanical dewatering	8	8
Solids reduction (incineration, wet oxidation)	12	
Land application	6	6
Total from page **TWO (2)**	----	52
Total from page **ONE (1)**	---	21
Grand Total	---	73

☒ - A: 71 points and greater
☐ - B: 51 points – 70 points
☐ - C: 26 points – 50 points
☐ - D: 0 points – 25 points

STANDARD CONDITIONS FOR NPDES PERMITS
ISSUED BY
THE MISSOURI DEPARTMENT OF NATURAL RESOURCES
MISSOURI CLEAN WATER COMMISSION
REVISED
AUGUST 1, 2014

These Standard Conditions incorporate permit conditions as required by 40 CFR 122.41 or other applicable state statutes or regulations. These minimum conditions apply unless superseded by requirements specified in the permit.

Part I – General Conditions
Section A – Sampling, Monitoring, and Recording

1. **Sampling Requirements.**
   a. Samples and measurements taken for the purpose of monitoring shall be representative of the monitored activity.
   b. All samples shall be taken at the outfall(s) or Missouri Department of Natural Resources (Department) approved sampling location(s), and unless specified, before the effluent joins or is diluted by any other body of water or substance.

2. **Monitoring Requirements**.
   a. Records of monitoring information shall include:
      i. The date, exact place, and time of sampling or measurements;
      ii. The individual(s) who performed the sampling or measurements;
      iii. The date(s) analyses were performed;
      iv. The individual(s) who performed the analyses;
      v. The analytical techniques or methods used; and
      vi. The results of such analyses.
   b. If the permittee monitors any pollutant more frequently than required by the permit at the location specified in the permit using test procedures approved under 40 CFR Part 136, or another method required for an industry-specific waste stream under 40 CFR subchapters N or O, the results of such monitoring shall be included in the calculation and reported to the Department with the discharge monitoring report data (DMR) submitted to the Department pursuant to Section B, paragraph 7.

3. **Sample and Monitoring Calculations.** Calculations for all sample and monitoring results which require averaging of measurements shall utilize an arithmetic mean unless otherwise specified in the permit.

4. **Test Procedures**. The analytical and sampling methods used shall conform to the reference methods listed in 10 CSR 20-7.015 unless alternates are approved by the Department. The facility shall use sufficiently sensitive analytical methods for detecting, identifying, and measuring the concentrations of pollutants. The facility shall ensure that the selected methods are able to quantify the presence of pollutants in a given discharge at concentrations that are low enough to determine compliance with Water Quality Standards in 10 CSR 20-7.031 or effluent limitations unless provisions in the permit allow for other alternatives. A method is "sufficiently sensitive" when; 1) the method minimum level is at or below the level of the applicable water quality criterion for the pollutant or, 2) the method minimum level is above the applicable water quality criterion, but the amount of pollutant in a facility's discharge is high enough that the method detects and quantifies the level of pollutant in the discharge, or 3) the method has the lowest minimum level of the analytical methods approved under 10 CSR 20-7.015. These methods are also required for parameters that are listed as monitoring only, as the data collected may be used to determine if limitations need to be established. A permittee is responsible for working with their contractors to ensure that the analysis performed is sufficiently sensitive.

5. **Record Retention.** Except for records of monitoring information required by the permit related to the permittee's sewage sludge use and disposal activities, which shall be retained for a period of at least five (5) years (or longer as required by 40 CFR part 503), the permittee shall retain records of all monitoring information, including all calibration and maintenance records and all original strip chart recordings for continuous monitoring instrumentation, copies of all reports required by the permit, and records of all data used to complete the application for the permit, for a period of at least three (3) years from the date of the sample, measurement, report or application. This period may be extended by request of the Department at any time.

6. **Illegal Activities.**
   a. The Federal Clean Water Act provides that any person who falsifies, tampers with, or knowingly renders inaccurate any monitoring device or method required to be maintained under the permit shall, upon conviction, be punished by a fine of not more than $10,000, or by imprisonment for not more than two (2) years, or both. If a conviction of a person is for a violation committed after a first conviction of such person under this paragraph, punishment is a fine of not more than $20,000 per day of violation, or by imprisonment of not more than four (4) years, or both.
   b. The Missouri Clean Water Law provides that any person or who falsifies, tampers with, or knowingly renders inaccurate any monitoring device or method required to be maintained pursuant to sections 644.006 to 644.141 shall, upon conviction, be punished by a fine of not more than $10,000, or by imprisonment for not more than six (6) months, or by both. Second and successive convictions for violation under this paragraph by any person shall be punished by a fine of not more than $50,000 per day of violation, or by imprisonment for not more than two (2) years, or both.

Section B – Reporting Requirements

1. **Planned Changes.**
   a. The permittee shall give notice to the Department as soon as possible of any planned physical alterations or additions to the permitted facility when:
      i. The alteration or addition to a permitted facility may meet one of the criteria for determining whether a facility is a new source in 40 CFR 122.29(b); or
      ii. The alteration or addition could significantly change the nature or increase the quantity of pollutants discharged. This notification applies to pollutants which are subject neither to effluent limitations in the permit, nor to notification requirements under 40 CFR 122.42;
      iii. The alteration or addition results in a significant change in the permittee's sludge use or disposal practices, and such alteration, addition, or change may justify the application of permit conditions that are different from or absent in the existing permit, including notification of additional use or disposal sites not reported during the permit application process or not reported pursuant to an approved land application plan;
      iv. Any facility expansions, production increases, or process modifications which will result in a new or substantially different discharge or sludge characteristics must be reported to the Department 60 days before the facility or process modification begins. Notification may be accomplished by application for a new permit. If the discharge does not violate effluent limitations specified in the permit, the facility is to submit a notice to the Department of the changed discharge at least 30 days before such changes. The Department may require a construction permit and/or permit modification as a result of the proposed changes at the facility.

2. **Non-compliance Reporting.**
   a. The permittee shall report any noncompliance which may endanger health or the environment. Relevant information shall be provided orally or via the current electronic method approved by the Department, within 24 hours from the time the permittee becomes aware of the circumstances, and shall be reported to the appropriate Regional Office during normal business hours or the Environmental Emergency Response hotline at 573-634-2436 outside of normal business hours. A written submission shall also be provided within five (5) business days of the time the permittee becomes aware of the circumstances. The written submission shall contain a description of the noncompliance and its cause; the period of noncompliance, including exact dates and times, and if the noncompliance has not been corrected, the anticipated time it is expected to continue; and steps taken or planned to reduce, eliminate, and prevent reoccurrence of the noncompliance.

b. The following shall be included as information which must be reported within 24 hours under this paragraph.
   i. Any unanticipated bypass which exceeds any effluent limitation in the permit.
   ii. Any upset which exceeds any effluent limitation in the permit.
   iii. Violation of a maximum daily discharge limitation for any of the pollutants listed by the Department in the permit required to be reported within 24 hours.
c. The Department may waive the written report on a case-by-case basis for reports under paragraph 2. b. of this section if the oral report has been received within 24 hours.

3. **Anticipated Noncompliance**. The permittee shall give advance notice to the Department of any planned changes in the permitted facility or activity which may result in noncompliance with permit requirements. The notice shall be submitted to the Department 60 days prior to such changes or activity.

4. **Compliance Schedules.** Reports of compliance or noncompliance with, or any progress reports on, interim and final requirements contained in any compliance schedule of the permit shall be submitted no later than 14 days following each schedule date. The report shall provide an explanation for the instance of noncompliance and a proposed schedule or anticipated date, for achieving compliance with the compliance schedule requirement.

5. **Other Noncompliance.** The permittee shall report all instances of noncompliance not reported under paragraphs 2, 3, and 6 of this section, at the time monitoring reports are submitted. The reports shall contain the information listed in paragraph 2. a. of this section.

6. **Other Information**. Where the permittee becomes aware that it failed to submit any relevant facts in a permit application, or submitted incorrect information in a permit application or in any report to the Department, it shall promptly submit such facts or information.

7. **Discharge Monitoring Reports.**
   a. Monitoring results shall be reported at the intervals specified in the permit.
   b. Monitoring results must be reported to the Department via the current method approved by the Department, unless the permittee has been granted a waiver from using the method. If the permittee has been granted a waiver, the permittee must use forms provided by the Department.
   c. Monitoring results shall be reported to the Department no later than the 28th day of the month following the end of the reporting period.

Section C – Bypass/Upset Requirements

1. **Definitions.**
   a. *Bypass*: the intentional diversion of waste streams from any portion of a treatment facility, except in the case of blending.
   b. *Severe Property Damage*: substantial physical damage to property, damage to the treatment facilities which causes them to become inoperable, or substantial and permanent loss of natural resources which can reasonably be expected to occur in the absence of a bypass. Severe property damage does not mean economic loss caused by delays in production.
   c. *Upset*: an exceptional incident in which there is unintentional and temporary noncompliance with technology based permit effluent limitations because of factors beyond the reasonable control of the permittee. An upset does not include noncompliance to the extent caused by operational error, improperly designed treatment facilities, inadequate treatment facilities, lack of preventive maintenance, or careless or improper operation.

2. **Bypass Requirements.**
   a. Bypass not exceeding limitations. The permittee may allow any bypass to occur which does not cause effluent limitations to be exceeded, but only if it also is for essential maintenance to assure efficient operation. These bypasses are not subject to the provisions of paragraphs 2. b. and 2. c. of this section.
   b. Notice.
      i. Anticipated bypass. If the permittee knows in advance of the need for a bypass, it shall submit prior notice, if possible at least 10 days before the date of the bypass.
      ii. Unanticipated bypass. The permittee shall submit notice of an unanticipated bypass as required in Section B – Reporting Requirements, paragraph 5 (24-hour notice).
   c. Prohibition of bypass.
      i. Bypass is prohibited, and the Department may take enforcement action against a permittee for bypass, unless:
         1. Bypass was unavoidable to prevent loss of life, personal injury, or severe property damage;
         2. There were no feasible alternatives to the bypass, such as the use of auxiliary treatment facilities, retention of untreated wastes, or maintenance during normal periods of equipment downtime. This condition is not satisfied if adequate back-up equipment should have been installed in the exercise of reasonable engineering judgment to prevent a bypass which occurred during normal periods of equipment downtime or preventive maintenance; and
         3. The permittee submitted notices as required under paragraph 2. b. of this section.
      ii. The Department may approve an anticipated bypass, after considering its adverse effects, if the Department determines that it will meet the three (3) conditions listed above in paragraph 2. c. i. of this section.

3. **Upset Requirements.**
   a. Effect of an upset. An upset constitutes an affirmative defense to an action brought for noncompliance with such technology based permit effluent limitations if the requirements of paragraph 3. b. of this section are met. No determination made during administrative review of claims that noncompliance was caused by upset, and before an action for noncompliance, is final administrative action subject to judicial review.
   b. Conditions necessary for a demonstration of upset. A permittee who wishes to establish the affirmative defense of upset shall demonstrate, through properly signed, contemporaneous operating logs, or other relevant evidence that:
      i. An upset occurred and that the permittee can identify the cause(s) of the upset;
      ii. The permitted facility was at the time being properly operated; and
      iii. The permittee submitted notice of the upset as required in Section B – Reporting Requirements, paragraph 2. b. ii. (24-hour notice).
      iv. The permittee complied with any remedial measures required under Section D – Administrative Requirements, paragraph 4.
   c. Burden of proof. In any enforcement proceeding, the permittee seeking to establish the occurrence of an upset has the burden of proof.

Section D – Administrative Requirements

1. **Duty to Comply.** The permittee must comply with all conditions of this permit. Any permit noncompliance constitutes a violation of the Missouri Clean Water Law and Federal Clean Water Act and is grounds for enforcement action; for permit termination, revocation and reissuance, or modification; or denial of a permit renewal application.
   a. The permittee shall comply with effluent standards or prohibitions established under section 307(a) of the Federal Clean Water Act for toxic pollutants and with standards for sewage sludge use or disposal established under section 405(d) of the CWA within the time provided in the regulations that establish these standards or prohibitions or standards for sewage sludge use or disposal, even if the permit has not yet been modified to incorporate the requirement.
   b. The Federal Clean Water Act provides that any person who violates section 301, 302, 306, 307, 308, 318 or 405 of the Act, or any permit condition or limitation implementing any such sections in a permit issued under section 402, or any requirement imposed in a pretreatment program approved under sections 402(a)(3) or 402(b)(8) of the Act, is subject to a civil penalty not to exceed $25,000 per day for each violation. The Federal Clean Water Act provides that any person who negligently violates sections 301, 302, 306, 307, 308, 318, or 405 of the Act, or any condition or limitation implementing any of such sections in a permit issued under section 402 of the Act, or any requirement

imposed in a pretreatment program approved under section 402(a)(3) or 402(b)(8) of the Act, is subject to criminal penalties of $2,500 to $25,000 per day of violation, or imprisonment of not more than one (1) year, or both. In the case of a second or subsequent conviction for a negligent violation, a person shall be subject to criminal penalties of not more than $50,000 per day of violation, or by imprisonment of not more than two (2) years, or both. Any person who knowingly violates such sections, or such conditions or limitations is subject to criminal penalties of $5,000 to $50,000 per day of violation, or imprisonment for not more than three (3) years, or both. In the case of a second or subsequent conviction for a knowing violation, a person shall be subject to criminal penalties of not more than $100,000 per day of violation, or imprisonment of not more than six (6) years, or both. Any person who knowingly violates section 301, 302, 303, 306, 307, 308, 318 or 405 of the Act, or any permit condition or limitation implementing any of such sections in a permit issued under section 402 of the Act, and who knows at that time that he thereby places another person in imminent danger of death or serious bodily injury, shall, upon conviction, be subject to a fine of not more than $250,000 or imprisonment of not more than 15 years, or both. In the case of a second or subsequent conviction for a knowing endangerment violation, a person shall be subject to a fine of not more than $500,000 or by imprisonment of not more than 30 years, or both. An organization, as defined in section 309(c)(3)(B)(iii) of the CWA, shall, upon conviction of violating the imminent danger provision, be subject to a fine of not more than $1,000,000 and can be fined up to $2,000,000 for second or subsequent convictions.

c. Any person may be assessed an administrative penalty by the EPA Director for violating section 301, 302, 306, 307, 308, 318 or 405 of this Act, or any permit condition or limitation implementing any of such sections in a permit issued under section 402 of this Act. Administrative penalties for Class I violations are not to exceed $10,000 per violation, with the maximum amount of any Class I penalty assessed not to exceed $25,000. Penalties for Class II violations are not to exceed $10,000 per day for each day during which the violation continues, with the maximum amount of any Class II penalty not to exceed $125,000.

d. It is unlawful for any person to cause or permit any discharge of water contaminants from any water contaminant or point source located in Missouri in violation of sections 644.006 to 644.141 of the Missouri Clean Water Law, or any standard, rule or regulation promulgated by the commission. In the event the commission or the director determines that any provision of sections 644.006 to 644.141 of the Missouri Clean Water Law or standard, rules, limitations or regulations promulgated pursuant thereto, or permits issued by, or any final abatement order, other order, or determination made by the commission or the director, or any filing requirement pursuant to sections 644.006 to 644.141 of the Missouri Clean Water Law or any other provision which this state is required to enforce pursuant to any federal water pollution control act, is being, was, or is in imminent danger of being violated, the commission or director may cause to have instituted a civil action in any court of competent jurisdiction for the injunctive relief to prevent any such violation or further violation or for the assessment of a penalty not to exceed $10,000 per day for each day, or part thereof, the violation occurred and continues to occur, or both, as the court deems proper. Any person who willfully or negligently commits any violation in this paragraph shall, upon conviction, be punished by a fine of not less than $2,500 nor more than $25,000 per day of violation, or by imprisonment for not more than one year, or both. Second and successive convictions for violation of the same provision of this paragraph by any person shall be punished by a fine of not more than $50,000 per day of violation, or by imprisonment for not more than two (2) years, or both.

2. **Duty to Reapply.**
   a. If the permittee wishes to continue an activity regulated by this permit after the expiration date of this permit, the permittee must apply for and obtain a new permit.
   b. A permittee with a currently effective site-specific permit shall submit an application for renewal at least 180 days before the expiration date of the existing permit, unless permission for a later date has been granted by the Department. (The Department shall not grant permission for applications to be submitted later than the expiration date of the existing permit.)
   c. A permittees with currently effective general permit shall submit an application for renewal at least 30 days before the existing permit expires, unless the permittee has been notified by the Department that an earlier application must be made. The Department may grant permission for a later submission date. (The Department shall not grant permission for applications to be submitted later than the expiration date of the existing permit.)

3. **Need to Halt or Reduce Activity Not a Defense.** It shall not be a defense for a permittee in an enforcement action that it would have been necessary to halt or reduce the permitted activity in order to maintain compliance with the conditions of this permit.

4. **Duty to Mitigate.** The permittee shall take all reasonable steps to minimize or prevent any discharge or sludge use or disposal in violation of this permit which has a reasonable likelihood of adversely affecting human health or the environment.

5. **Proper Operation and Maintenance**. The permittee shall at all times properly operate and maintain all facilities and systems of treatment and control (and related appurtenances) which are installed or used by the permittee to achieve compliance with the conditions of this permit. Proper operation and maintenance also includes adequate laboratory controls and appropriate quality assurance procedures. This provision requires the operation of back-up or auxiliary facilities or similar systems which are installed by a permittee only when the operation is necessary to achieve compliance with the conditions of the permit.

6. **Permit Actions.**
   a. Subject to compliance with statutory requirements of the Law and Regulations and applicable Court Order, this permit may be modified, suspended, or revoked in whole or in part during its term for cause including, but not limited to, the following:
      i. Violations of any terms or conditions of this permit or the law;
      ii. Having obtained this permit by misrepresentation or failure to disclose fully any relevant facts;
      iii. A change in any circumstances or conditions that requires either a temporary or permanent reduction or elimination of the authorized discharge; or
      iv. Any reason set forth in the Law or Regulations.
   b. The filing of a request by the permittee for a permit modification, revocation and reissuance, or termination, or a notification of planned changes or anticipated noncompliance does not stay any permit condition.

7. **Permit Transfer.**
   a. Subject to 10 CSR 20-6.010, an operating permit may be transferred upon submission to the Department of an application to transfer signed by the existing owner and the new owner, unless prohibited by the terms of the permit. Until such time the permit is officially transferred, the original permittee remains responsible for complying with the terms and conditions of the existing permit.
   b. The Department may require modification or revocation and reissuance of the permit to change the name of the permittee and incorporate such other requirements as may be necessary under the Missouri Clean Water Law or the Federal Clean Water Act.
   c. The Department, within 30 days of receipt of the application, shall notify the new permittee of its intent to revoke or reissue or transfer the permit.

8. **Toxic Pollutants.** The permittee shall comply with effluent standards or prohibitions established under section 307(a) of the Federal Clean Water Act for toxic pollutants and with standards for sewage sludge use or disposal established under section 405(d) of the Federal Clean Water Act within the time provided in the regulations that establish these standards or prohibitions or standards for sewage sludge use or disposal, even if the permit has not yet been modified to incorporate the requirement.

9. **Property Rights.** This permit does not convey any property rights of any sort, or any exclusive privilege.

10. **Duty to Provide Information.** The permittee shall furnish to the Department, within a reasonable time, any information which the Department may request to determine whether cause exists for modifying, revoking and reissuing, or terminating this permit or to determine compliance with this permit. The permittee shall also furnish to the Department upon request, copies of records required to be kept by this permit.

11. **Inspection and Entry.** The permittee shall allow the Department, or an authorized representative (including an authorized contractor acting as a representative of the Department), upon presentation of credentials and other documents as may be required by law, to:
    a. Enter upon the permittee's premises where a regulated facility or activity is located or conducted, or where records must be kept under the conditions of the permit;
    b. Have access to and copy, at reasonable times, any records that must be kept under the conditions of this permit;
    c. Inspect at reasonable times any facilities, equipment (including monitoring and control equipment), practices, or operations regulated or required under this permit; and
    d. Sample or monitor at reasonable times, for the purposes of assuring permit compliance or as otherwise authorized by the Federal Clean Water Act or Missouri Clean Water Law, any substances or parameters at any location.

12. **Closure of Treatment Facilities.**
    a. Persons who cease operation or plan to cease operation of waste, wastewater, and sludge handling and treatment facilities shall close the facilities in accordance with a closure plan approved by the Department.
    b. Operating Permits under 10 CSR 20-6.010 or under 10 CSR 20-6.015 are required until all waste, wastewater, and sludges have been disposed of in accordance with the closure plan approved by the Department and any disturbed areas have been properly stabilized. Disturbed areas will be considered stabilized when perennial vegetation, pavement, or structures using permanent materials cover all areas that have been disturbed. Vegetative cover, if used, shall be at least 70% plant density over 100% of the disturbed area.

13. **Signatory Requirement.**
    a. All permit applications, reports required by the permit, or information requested by the Department shall be signed and certified. (See 40 CFR 122.22 and 10 CSR 20-6.010)
    b. The Federal Clean Water Act provides that any person who knowingly makes any false statement, representation, or certification in any record or other document submitted or required to be maintained under this permit, including monitoring reports or reports of compliance or non-compliance shall, upon conviction, be punished by a fine of not more than $10,000 per violation, or by imprisonment for not more than six (6) months per violation, or by both.
    c. The Missouri Clean Water Law provides that any person who knowingly makes any false statement, representation or certification in any application, record, report, plan, or other document filed or required to be maintained pursuant to sections 644.006 to 644.141 shall, upon conviction, be punished by a fine of not more than ten thousand dollars, or by imprisonment for not more than six months, or by both.

14. **Severability.** The provisions of the permit are severable, and if any provision of the permit, or the application of any provision of the permit to any circumstance, is held invalid, the application of such provision to other circumstances, and the remainder of the permit, shall not be affected thereby.

STANDARD CONDITIONS FOR NPDES PERMITS
ISSUED BY
THE MISSOURI DEPARTMENT OF NATURAL RESOURCES
MISSOURI CLEAN WATER COMMISSION
REVISED
MAY 1, 2013

PART II - SPECIAL CONDITIONS – PUBLICLY OWNED TREATMENT WORKS
SECTION A – INDUSTRIAL USERS

1. Definitions

Definitions as set forth in the Missouri Clean Water Laws and approved by the Missouri Clean Water Commission shall apply to terms used herein.

Significant Industrial User (SIU). Except as provided in the *General Pretreatment Regulation* 10 CSR 20-6.100, the term Significant Industrial User means:

1. All Industrial Users subject to Categorical Pretreatment Standards; and
2. Any other Industrial User that: discharges an average of 25,000 gallons per day or more of process wastewater to the Publicly-Owned Treatment Works (POTW) (excluding sanitary, noncontact cooling and boiler blowdown wastewater); contributes a process wastestream which makes up 5 percent or more of the average dry weather hydraulic or organic capacity of the POTW treatment plant; or is designated as such by the Control Authority on the basis that the Industrial User has a reasonable potential for adversely affecting the POTW's or for violating any Pretreatment Standard or requirement.

Clean Water Act (CWA) is the the federal Clean Water Act of 1972, 33 U.S.C. § 1251 et seq. (2002).

2. Identification of Industrial Discharges

Pursuant to 40 CFR 122.44(j)(1), all POTWs shall identify, in terms of character and volume of pollutants, any Significant Industrial Users discharging to the POTW subject to Pretreatment Standards under section 307(b) of the CWA and 40 CFR 403.

3. Application Information

Applications for renewal or modification of this permit must contain the information about industrial discharges to the POTW pursuant to 40 CFR 122.21(j)(6)

4. Notice to the Department

Pursuant to 40 CFR 122.42(b), all POTWs must provide adequate notice of the following:

1. Any new introduction of pollutants into the POTW from an indirect discharger which would be subject to section 301 or 306 of CWA if it were directly discharging these pollutants; and
2. Any substantial change into the volume or character of pollutants being introduced into that POTW by a source introducing pollutants into the POTW at the time of issuance of the permit.
3. For purposes of this paragraph, adequate notice shall include information on:
   i. the quality and quantity of effluent introduced into the POTW, and
   ii. any anticipated impact of the change on the quantity or quality of effluent to be discharged from the POTW.

For POTWs without an approved pretreatment program, the notice of industrial discharges which was not included in the permit application shall be made as soon as practicable. For POTWs with an approved pretreatment program, notice is to be included in the annual pretreatment report required in the special conditions of this permit. Notice may be sent to:

Missouri Department of Natural Resources
Water Protection Program
Attn: Pretreatment Coordinator
P.O. Box 176
Jefferson City, MO 65102

STANDARD CONDITIONS FOR NPDES PERMITS
ISSUED BY
THE MISSOURI DEPARTMENT OF NATURAL RESOURCES
MISSOURI CLEAN WATER COMMISSION
March 1, 2015

PART III – SLUDGE AND BIOSOLIDS FROM DOMESTIC AND INDUSTRIAL WASTEWATER TREATMENT FACILITIES

SECTION A – GENERAL REQUIREMENTS

1. This permit pertains to sludge requirements under the Missouri Clean Water Law and regulation for domestic wastewater and industrial process wastewater. This permit also incorporates applicable federal sludge disposal requirements under 40 CFR 503 for domestic wastewater. The Environmental Protection Agency (EPA) has principal authority for permitting and enforcement of the federal sludge regulations under 40 CFR 503 for domestic wastewater. EPA has reviewed and accepted these standard sludge conditions. EPA may choose to issue a separate sludge addendum to this permit or a separate federal sludge permit at their discretion to further address the federal requirements.
2. These PART III Standard Conditions apply only to sludge and biosolids generated at domestic wastewater treatment facilities, including public owned treatment works (POTW), privately owned facilities and sludge or biosolids generated at industrial facilities.
3. Sludge and Biosolids Use and Disposal Practices:
    a. The permittee is authorized to operate the sludge and biosolids treatment, storage, use, and disposal facilities listed in the facility description of this permit.
    b. The permittee shall not exceed the design sludge volume listed in the facility description and shall not use sludge disposal methods that are not listed in the facility description, without prior approval of the permitting authority.
    c. The permittee is authorized to operate the storage, treatment or generating sites listed in the Facility Description section of this permit.
4. Sludge Received from other Facilities:
    a. Permittees may accept domestic wastewater sludge from other facilities including septic tank pumpings from residential sources as long as the design sludge volume is not exceeded and the treatment facility performance is not impaired.
    b. The permittee shall obtain a signed statement from the sludge generator or hauler that certifies the type and source of the sludge
5. These permit requirements do not supersede nor remove liability for compliance with county and other local ordinances.
6. These permit requirements do not supersede nor remove liability for compliance with other environmental regulations such as odor emissions under the Missouri Air Pollution Control Law and regulations.
7. This permit may (after due process) be modified, or alternatively revoked and reissued, to comply with any applicable sludge disposal standard or limitation issued or approved under Section 405(d) of the Clean Water Act or under Chapter 644 RSMo.
8. In addition to STANDARD CONDITIONS, the Department may include sludge limitations in the special conditions portion or other sections of a site specific permit.
9. Alternate Limits in the Site Specific Permit.
   Where deemed appropriate, the Department may require an individual site specific permit in order to authorize alternate limitations:
    a. A site specific permit must be obtained for each operating location, including application sites.
    b. To request a site specific permit, an individual permit application, permit fee, and supporting documents shall be submitted for each operating location. This shall include a detailed sludge/biosolids management plan or engineering report.
10. Exceptions to these Standard Conditions may be authorized on a case-by-case basis by the Department, as follows:
    a. The Department will prepare a permit modification and follow permit notice provisions as applicable under 10 CSR 20-6.020, 40 CFR 124.10, and 40 CFR 501.15(a)(2)(ix)(E). This includes notification of the owner of the property located adjacent to each land application site, where appropriate.
    b. Exceptions cannot be granted where prohibited by the federal sludge regulations under 40 CFR 503.

SECTION B – DEFINITIONS

1. Best Management Practices include agronomic loading rates, soil conservation practices and other site restrictions.
2. Biosolids means organic fertilizer or soil amendment produced by the treatment of domestic wastewater sludge.
3. Biosolids land application facility is a facility where biosolids are spread onto the land at agronomic rates for production of food or fiber. The facility includes any structures necessary to store the biosolids until soil, weather, and crop conditions are favorable for land application.
4. Class A biosolids means a material that has met the Class A pathogen reduction requirements or equivalent treatment by a Process to Further Reduce Pathogens (PFRP) in accordance with 40 CFR 503.
5. Class B biosolids means a material that has met the Class B pathogen reduction requirements or equivalent treatment by a Process to Significantly Reduce Pathogens (PFRP) in accordance with 40 CFR 503.
6. Domestic wastewater means wastewater originating from the sanitary conveniences of residences, commercial buildings, factories and institutions; or co-mingled sanitary and industrial wastewater processed by a (POTW) or a privately owned facility.
7. Industrial wastewater means any wastewater, also known as process water, not defined as domestic wastewater. Per 40 CFR Part 122, process water means any water which, during manufacturing or processing, comes into direct contact with or results from the production or use of any raw material, intermediate product, finished product, byproduct, or waste product.
8. Mechanical treatment plants are wastewater treatment facilities that use mechanical devices to treat wastewater, including septic tanks, sand filters, extended aeration, activated sludge, contact stabilization, trickling filters, rotating biological discs, and other similar facilities. It does not include wastewater treatment lagoons and constructed wetlands for wastewater treatment.
9. Operating location as defined in 10 CSR 20-2.010 is all contiguous lands owned, operated or controlled by one (1) person or by two (2) or more persons jointly or as tenants in common.
10. Plant Available Nitrogen (PAN) is the nitrogen that will be available to plants during the growing seasons after biosolids application.
11. Public contact site is land with a high potential for contact by the public. This includes, but is not limited to, public parks, ball fields, cemeteries, plant nurseries, turf farms, and golf courses.
12. Sludge is the solid, semisolid, or liquid residue removed during the treatment of wastewater. Sludge includes septage removed from septic tanks or equivalent facilities. Sludge does not include carbon coal byproducts (CCBs)
13. Sludge lagoon is part of a mechanical wastewater treatment facility. A sludge lagoon is an earthen basin that receives sludge that has been removed from a wastewater treatment facility. It does not include a wastewater treatment lagoon or sludge treatment units that are not a part of a mechanical wastewater treatment facility.
14. Septage is the material pumped from residential septic tanks and similar treatment works (with a design population of less than 150 people). The standard for biosolids from septage is different from other sludges.

SECTION C – MECHANICAL WASTEWATER TREATMENT FACILITIES

1. Sludge shall be routinely removed from wastewater treatment facilities and handled according to the permit facility description and sludge conditions of this permit.
2. The permittee shall operate the facility so that there is no sludge discharged to waters of the state.
3. Mechanical treatment plants shall have separate sludge storage compartments in accordance with 10 CSR 20, Chapter 8. Failure to remove sludge from these storage compartments on the required design schedule is a violation of this permit.

SECTION D – SLUDGE DISPOSED AT OTHER TREATMENT FACILITY OR CONTRACT HAULER

1. This section applies to permittees that haul sludge to another treatment facility for disposal or use contract haulers to remove and dispose of sludge.
2. Permittees that use contract haulers are responsible for compliance with all the terms of this permit including final disposal, unless the hauler has a separate permit for sludge or biosolids disposal issued by the Department; or the hauler transports the sludge to another permitted treatment facility.
3. Haulers who land apply septage must obtain a state permit.
4. Testing of sludge, other than total solids content, is not required if sludge is hauled to a municipal wastewater treatment facility or other permitted wastewater treatment facility, unless it is required by the accepting facility.

SECTION E – INCINERATION OF SLUDGE

1. Sludge incineration facilities shall comply with the requirements of 40 CFR 503 Subpart E; air pollution control regulations under 10 CSR 10; and solid waste management regulations under 10 CSR 80.
2. Permittee may be authorized under the facility description of this permit to store incineration ash in lagoons or ash ponds. This permit does not authorize the disposal of incineration ash. Incineration ash shall be disposed in accordance with 10 CSR 80; or if the ash is determined to be hazardous with 10 CSR 25.
3. In addition to normal sludge monitoring, incineration facilities shall report the following as part of the annual report, quantity of sludge incinerated, quantity of ash generated, quantity of ash stored, and ash used or disposal method, quantity, and location. Permittee shall also provide the name of the disposal facility and the applicable permit number.

SECTION F – SURFACE DISPOSAL SITES AND SLUDGE LAGOONS

1. Surface disposal sites of domestic facilities shall comply with the requirements in 40 CFR 503 Subpart C; air pollution control regulations under 10 CSR 10; and solid waste management regulations under 10 CSR 80.
2. Sludge storage lagoons are temporary facilities and are not required to obtain a permit as a solid waste management facility under 10 CSR 80. In order to maintain sludge storage lagoons as storage facilities, accumulated sludge must be removed routinely, but not less than once every two years unless an alternate schedule is approved in the permit. The amount of sludge removed will be dependent on sludge generation and accumulation in the facility. Enough sludge must be removed to maintain adequate storage capacity in the facility.
    a. In order to avoid damage to the lagoon seal during cleaning, the permittee may leave a layer of sludge on the bottom of the lagoon, upon prior approval of the Department; or
    b. Permittee shall close the lagoon in accordance with Section H.

SECTION G – LAND APPLICATION

1. The permittee shall not land apply sludge or biosolids unless land application is authorized in the facility description or the special conditions of the issued NPDES permit.
2. Land application sites within a 20 miles radius of the wastewater treatment facility are authorized under this permit when biosolids are applied for beneficial use in accordance with these standard conditions unless otherwise specified in a site specific permit. If the permittee's land application site is greater than a 20 mile radius of the wastewater treatment facility, approval must be granted from the Department.
3. Land application shall not adversely affect a threatened or endangered species or its designated critical habitat.
4. Biosolids shall not be applied unless authorized in this permit or exempted under 10 CSR 20, Chapter 6.
    a. This permit does not authorize the land application of domestic sludge except for when sludge meets the definition of biosolids.
    b. This permit authorizes "Class A or B" biosolids derived from domestic wastewater and/or process water sludge to be land applied onto grass land, crop land, timber or other similar agricultural or silviculture lands at rates suitable for beneficial use as organic fertilizer and soil conditioner.
5. Public Contact Sites:

    Permittees who wish to apply Class A biosolids to public contact sites must obtain approval from the Department after two years of proper operation with acceptable testing documentation that shows the biosolids meet Class A criteria. A shorter length of testing will be allowed with prior approval from the Department. Authorization for land applications must be provided in the special conditions section of this permit or in a separate site specific permit.
    a. After Class B biosolids have been land applied, public access must be restricted for 12 months.
    b. Class B biosolids are only land applied to root crops, home gardens or vegetable crops whose edible parts will not be for human consumption.
6. Agricultural and Silvicultural Sites:

    Septage – Based on Water Quality guide 422 (WQ422) published by the University of Missouri
    a. Haulers that land apply septage must obtain a state permit
    b. Do not apply more than 30,000 gallons of septage per acre per year.
    c. Septage tanks are designed to retain sludge for one to three years which will allow for a larger reduction in pathogens and vectors, as compared to other mechanical type treatment facilities.
    d. To meet Class B sludge requirements, maintain septage at 12 pH for at least thirty (30) minutes before land application. 50 pounds of hydrated lime shall be added to each 1,000 gallons of septage in order to meet pathogen and vector stabilization for septage biosolids applied to crops, pastures or timberland.
    e. Lime is to be added to the pump truck and not directly to the septic tanks, as lime would harm the beneficial bacteria of the septic tank.

Biosolids - Based on Water Quality guide 423, 424, and 425 (WQ423, WQ424, WQ425) published by the University of Missouri;

a. Biosolids shall be monitored to determine the quality for regulated pollutants

b. The number of samples taken is directly related to the amount of sludge produced by the facility (See Section I of these Standard Conditions). Report as dry weight unless otherwise specified in the site specific permit. Samples should be taken only during land application periods. When necessary, it is permissible to mix biosolids with lower concentrations of biosolids as well as other suitable Department approved material to reach the maximum concentration of pollutants allowed.

c. Table 1 gives the maximum concentration allowable to protect water quality standards

TABLE 1

Biosolids ceiling concentration [1]	
Pollutant	Milligrams per kilogram dry weight
Arsenic	75
Cadmium	85
Copper	4,300
Lead	840
Mercury	57
Molybdenum	75
Nickel	420
Selenium	100
Zinc	7,500

[1] Land application is not allowed if the sludge concentration exceeds the maximum limits for any of these pollutants

d. The low metal concentration biosolids has reduced requirements because of its higher quality and can safely be applied for 100 years or longer at typical agronomic loading rates. (See Table 2)

TABLE 2

Biosolids Low Metal Concentration [1]	
Pollutant	Milligrams per kilogram dry weight
Arsenic	41
Cadmium	39
Copper	1,500
Lead	300
Mercury	17
Nickel	420
Selenium	36
Zinc	2,800

[1] You may apply low metal biosolids without tracking cumulative metal limits, provided the cumulative application of biosolids does not exceed 500 dry tons per acre.

e. Each pollutant in Table 3 has an annual and a total cumulative loading limit, based on the allowable pounds per acre for various soil categories.

TABLE 3

Pollutant	CEC 15+		CEC 5 to 15		CEC 0 to 5	
	Annual	Total [1]	Annual	Total [1]	Annual	Total [1]
Arsenic	1.8	36.0	1.8	36.0	1.8	36.0
Cadmium	1.7	35.0	0.9	9.0	0.4	4.5
Copper	66.0	1,335.0	25.0	250.0	12.0	125.0
Lead	13.0	267.0	13.0	267.0	13.0	133.0
Mercury	0.7	15.0	0.7	15.0	0.7	15.0
Nickel	19.0	347.0	19.0	250.0	12.0	125.0
Selenium	4.5	89.0	4.5	44.0	1.6	16.0
Zinc	124.0	2,492.0	50.0	500.0	25.0	250.0

[1] Total cumulative loading limits for soils with equal or greater than 6.0 pH (salt based test) or 6.5 pH (water based test)

TABLE 4 - Guidelines for land application of other trace substances [1]

Cumulative Loading	
Pollutant	Pounds per acre
Aluminum	4,000[2]
Beryllium	100
Cobalt	50
Fluoride	800
Manganese	500
Silver	200
Tin	1,000
Dioxin	(10 ppt in soil)[3]
Other	[4]

[1] Design of land treatment systems for Industrial Waste, 1979. Michael Ray Overcash, North Carolina State University and Land Treatment of Municipal Wastewater, EPA 1981.)

[2] This applies for a soil with a pH between 6.0 and 7.0 (salt based test) or a pH between 6.5 to 7.5 (water based test). Case-by-case review is required for higher pH soils.

[3] Total Dioxin Toxicity Equivalents (TEQ) in soils, based on a risk assessment under 40 CFR 744, May 1998.

[4] Case by case review. Concentrations in sludge should not exceed the 95th percentile of the National Sewage Sludge Survey, EPA, January 2009.

Best Management Practices – Based on Water Quality guide 426 (WQ426) published by the University of Missouri

a. Use best management practices when applying biosolids.
b. Biosolids cannot discharge from the land application site
c. Biosolid application is subject to the Missouri Department of Agriculture State Milk Board concerning grazing restrictions of lactating dairy cattle.
d. Biosolid application must be in accordance with section 4 of the Endangered Species Act.
e. Do not apply more than the agronomic rate of nitrogen needed.
f. The applicator must document the Plant Available Nitrogen (PAN) loadings, available nitrogen in the soil, and crop removal when either of the following occurs: 1) When biosolids are greater than 50,000 mg/kg TN; or 2) When biosolids are land applied at an application rate greater than two dry tons per acre per year.
    i. PAN can be determined as follows and is in accordance with WQ426
    (Nitrate + nitrite nitrogen) + (organic nitrogen x 0.2) + (ammonia nitrogen x volatilization factor[1]).
    [1] Volatilization factor is 0.7 for surface application and 1 for subsurface application.
g. Buffer zones are as follows:
    i. 300 feet of a water supply well, sinkhole, lake, pond, water supply reservoir or water supply intake in a stream;
    ii. 300 feet of a losing stream, no discharge stream, stream stretches designated for whole body contact recreation, wild and scenic rivers, Ozark National Scenic Riverways or outstanding state resource waters as listed in the Water Quality Standards, 10 CSR 20-7.031;
    iii. 150 feet if dwellings;
    iv. 100 feet of wetlands or permanent flowing streams;
    v. 50 feet of a property line or other waters of the state, including intermittent flowing streams.
h. Slope limitation for application sites are as follows;
    i. A slope 0 to 6 percent has no rate limitation
    ii. Applied to a slope 7 to 12 percent, the applicator may apply biosolids when soil conservation practices are used to meet the minimum erosion levels
    iii. Slopes > 12 percent, apply biosolids only when grass is vegetated and maintained with at least 80 percent ground cover at a rate of two dry tons per acre per year or less.
i. No biosolids may be land applied in an area that it is reasonably certain that pollutants will be transported into waters of the state.
j. Do not apply biosolids to sites with soil that is snow covered, frozen or saturated with liquid without prior approval by the Department.
k. Biosolids / sludge applicators must keep detailed records up to five years.

SECTION H – CLOSURE REQUIREMENTS

1. This section applies to all wastewater facilities (mechanical, industrial, and lagoons) and sludge or biosolids storage and treatment facilities and incineration ash ponds. It does not apply to land application sites.
2. Permittees of a domestic wastewater facility who plan to cease operation must obtain Department approval of a closure plan which addresses proper removal and disposal of all residues, including sludge, biosolids. Mechanical plants, sludge lagoons, ash ponds and other storage structures must obtain approval of a closure plan from the Department. Permittee must maintain this permit until the facility is closed in accordance with the approved closure plan per 10 CSR 20 – 6. 010 and 10 CSR 20 – 6.015.
3. Residuals that are left in place during closure of a lagoon or earthen structure or ash pond shall not exceed the agricultural loading rates as follows:
    a. Residuals shall meet the monitoring and land application limits for agricultural rates as referenced in Section H of these standard conditions.
    b. If a wastewater treatment lagoon has been in operation for 15 years or more without sludge removal, the sludge in the lagoon qualifies as a Class B biosolids with respect to pathogens due to anaerobic digestion, and testing for fecal coliform is not required. For other lagoons, testing for fecal coliform is required to show compliance with Class B biosolids limitations. In order to reach Class B biosolids requirements, fecal coliform must be less than 2,000,000 colony forming units or 2,000,000 most probable number. All fecal samples must be presented as geometric mean per gram.
    c. The allowable nitrogen loading that may be left in the lagoon shall be based on the plant available nitrogen (PAN) loading. For a grass cover crop, the allowable PAN is 300 pounds/acre.
        i. PAN can be determined as follows:

        (Nitrate + nitrite nitrogen) + (organic nitrogen x 0.2) + (ammonia nitrogen x volatilization factor[1]).

        [1] Volatilization factor is 0.7 for surface application and 1 for subsurface application.
4. When closing a domestic wastewater treatment lagoon with a design treatment capacity equal or less than 150 persons, the residuals are considered "septage" under the similar treatment works definition. See Section B of these standard conditions. Under the septage category, residuals may be left in place as follows:
    a. Testing for metals or fecal coliform is not required
    b. If the wastewater treatment lagoon has been in use for less than 15 years, mix lime with the sludge at a rate of 50 pounds of hydrated lime per 1000 gallons (134 cubic feet) of sludge.
    c. The amount of sludge that may be left in the lagoon shall be based on the plant available nitrogen (PAN) loading. 100 dry tons/acre of sludge may be left in the basin without testing for nitrogen. If 100 dry tons/acre or more will be left in the lagoon, test for nitrogen and determine the PAN using the calculation above. Allowable PAN loading is 300 pounds/acre.
5. Residuals left within the domestic lagoon shall be mixed with soil on at least a 1 to 1 ratio, the lagoon berm shall be demolished, and the site shall be graded and contain ≥70% vegetative density over 100% of the site so as to avoid ponding of storm water and provide adequate surface water drainage without creating erosion.
6. Lagoons and/or earthen structure and/or ash pond closure activities shall obtain a storm water permit for land disturbance activities that equal or exceed one acre in accordance with 10 CSR 20-6.200
7. When closing a mechanical wastewater and/or industrial process wastewater plant; all sludge must be cleaned out and disposed of in accordance with the Department approved closure plan before the permit for the facility can be terminated.
    a. Land must be stabilized which includes any grading, alternate use or fate upon approval by the Department, remediation, or other work that exposes sediment to stormwater per 10 CSR 20-6.200. The site shall be graded and contain ≥70% vegetative density over 100% of the site, so as to avoid ponding of storm water and provide adequate surface water drainage without creating erosion.
    b. Per 10 CSR 20-6.015(4)(B)6, Hazardous Waste shall not be land applied or disposed during industrial and mechanical plant closures unless in accordance with Missouri Hazardous Waste Management Law and Regulations under 10 CSR 25.
    c. After demolition of the mechanical plant / industrial plant, the site must only contain clean fill defined in RSMo 260.200 (5) as uncontaminated soil, rock, sand, gravel, concrete, asphaltic concrete, cinderblocks, brick, minimal amounts of wood and metal, and inert solids as approved by rule or policy of the Department for fill or other beneficial use. Other solid wastes must be removed.
8. If sludge from the domestic lagoon or mechanical treatment plant exceeds agricultural rates under Section G and/or H, a landfill permit or solid waste disposal permit must be obtained if the permittee chooses to seek authorization for on-site sludge disposal under the Missouri Solid Waste Management Law and regulations per 10 CSR 80, and the permittee must comply with the surface disposal requirements under 40 CFR 503, Subpart C.

SECTION I – MONITORING FREQUENCY

1. At a minimum, sludge or biosolids shall be tested for volume and percent total solids on a frequency that will accurately represent sludge quantities produced and disposed. Please see the table below.

TABLE 5

Design Sludge Production (dry tons per year)	Monitoring Frequency (See Notes 1, 2, and 3)			
	Metals, Pathogens and Vectors	Nitrogen TKN [1]	Nitrogen PAN [2]	Priority Pollutants and TCLP [3]
0 to 100	1 per year	1 per year	1 per month	1 per year
101 to 200	biannual	biannual	1 per month	1 per year
201 to 1,000	quarterly	quarterly	1 per month	1 per year
1,001 to 10,000	1 per month	1 per month	1 per week	--[4]
10,001 +	1 per week	1 per week	1 per day	--[4]

[1] Test total Kjeldahl nitrogen, if biosolids application is 2 dry tons per acre per year or less.
[2] Calculate plant available nitrogen (PAN) when either of the following occurs: 1) when biosolids are greater than 50,000 mg/kg TN; or 2) when biosolids are land applied at an application rate greater than two dry tons per acre per year.
[3] Priority pollutants (40 CFR 122.21, Appendix D, Tables II and III) and toxicity characteristic leaching procedure (40 CFR 261.24) is required only for permit holders that must have a pre-treatment program.
[4] One sample for each 1,000 dry tons of sludge.

Note 1: Total solids: A grab sample of sludge shall be tested one per day during land application periods for percent total solids. This data shall be used to calculate the dry tons of sludge applied per acre.
Note 2: Total Phosphorus: Total phosphorus and total potassium shall be tested at the same monitoring frequency as metals.
Note 3: Table 5 is not applicable for incineration and permit holders that landfill their sludge.

2. If you own a wastewater treatment lagoon or sludge lagoon that is cleaned out once a year or less, you may choose to sample only when the sludge is removed or the lagoon is closed. Test one composite sample for each 100 dry tons of sludge or biosolids removed from the lagoon during the year within the lagoon at closing. Composite sample must represent various areas at one-foot depth.
3. Additional testing may be required in the special conditions or other sections of the permit. Permittees receiving industrial wastewater may be required to conduct additional testing upon request from the Department.
4. At this time, the Department recommends monitoring requirements shall be performed in accordance with, "POTW Sludge Sampling and Analysis Guidance Document," United States Environmental Protection Agency, August 1989, and the subsequent revisions.

SECTION J – RECORD KEEPING AND REPORTING REQUIREMENTS

1. The permittee shall maintain records on file at the facility for at least five years for the items listed in these standard conditions and any additional items in the Special Conditions section of this permit. This shall include dates when the sludge facility is checked for proper operation, records of maintenance and repairs and other relevant information.
2. Reporting period
   a. By January 28th of each year, an annual report shall be submitted for the previous calendar year period for all mechanical wastewater treatment facilities, sludge lagoons, and sludge or biosolids disposal facilities.
   b. Permittees with wastewater treatment lagoons shall submit the above annual report only when sludge or biosolids are removed from the lagoon during the report period or when the lagoon is closed.
3. Report Forms. The annual report shall be submitted on report forms provided by the Department or equivalent forms approved by the Department.
4. Reports shall be submitted as follows:

   Major facilities (those serving 10,000 persons or 1 million gallons per day) shall report to both the Department and EPA. Other facilities need to report only to the Department. Reports shall be submitted to the addresses listed as follows:

   DNR regional office listed in your permit
   (see cover letter of permit)
   ATTN: Sludge Coordinator

   EPA Region VII
   Water Compliance Branch (WACM)
   Sludge Coordinator
   11201 Renner Blvd.
   Lenexa, KS 66219

5. Annual report contents. The annual report shall include the following:
    a. Sludge and biosolids testing performed. Include a copy or summary of all test results, even if not required by the permit.
    b. Sludge or biosolids quantity shall be reported as dry tons for quantity generated by the wastewater treatment facility, the quantity stored on site at the end of the year, and the quantity used or disposed.
    c. Gallons and % solids data used to calculate the dry ton amounts.
    d. Description of any unusual operating conditions.
    e. Final disposal method, dates, and location, and person responsible for hauling and disposal.
        i. This must include the name, address for the hauler and sludge facility. If hauled to a municipal wastewater treatment facility, sanitary landfill, or other approved treatment facility, give the name of that facility.
        ii. Include a description of the type of hauling equipment used and the capacity in tons, gallons, or cubic feet.
    f. Contract Hauler Activities:
    If contract hauler, provide a copy of a signed contract from the contractor. Permittee shall require the contractor to supply information required under this permit for which the contractor is responsible. The permittee shall submit a signed statement from the contractor that he has complied with the standards contained in this permit, unless the contract hauler has a separate sludge or biosolids use permit.
    g. Land Application Sites:
        i. Report the location of each application site, the annual and cumulative dry tons/acre for each site, and the landowners name and address. The location for each spreading site shall be given as a legal description for nearest ¼, ¼, Section, Township, Range, and county, or UTM coordinates. The facility shall report PAN when either of the following occurs: 1) When biosolids are greater than 50,000 mg/kg TN; or 2) when biosolids are land applied at an application rate greater than two dry tons per acre per year.
        ii. If the “Low Metals” criteria are exceeded, report the annual and cumulative pollutant loading rates in pounds per acre for each applicable pollutant, and report the percent of cumulative pollutant loading which has been reached at each site.
        iii. Report the method used for compliance with pathogen and vector attraction requirements.
        iv. Report soil test results for pH, CEC, and phosphorus. If none was tested during the year, report the last date when tested and results.

DEPARTMENT OF THE AIR FORCE
509TH CIVIL ENGINEER SQUADRON (AFGSC)
WHITEMAN AIR FORCE BASE, MISSOURI

RECEIVED
FEB 17 2016
Water Protection Program

February 16, 2016

MEMORANDUM FOR MISSOURI DEPARTMENT OF NATURAL RESOURCES
Water Protection Program
ATTN: NPDES Permits and Engineering Section
Jefferson City, Missouri 65102

FROM: 509 CES/CEIEC
660 10th Street, Suite 209
Whiteman AFB MO 65305-5074

SUBJECT: Wastewater Treatment Plant Permit Renewal Application – Mo-0029378

1. Attached are the Wastewater treatment Plant Application forms.

2. Whiteman Air Force Base requests that the Missouri Department of Natural Resources consider reauthorizing an additional outfall (001B) for our WWTP. This outfall had been authorized in previous permits, but will only be used in the future as an emergency discharge location. Effluent discharged through the outfall does not bypass any secondary treatment. The only treatment that will be bypassed would be the tertiary treatment (disinfection) which is required only for the land application of effluent to the golf course. Currently Whiteman is not required to disinfect prior to discharge to the receiving stream. This additional discharge location already has a Parshall Flume and all daily monitoring will occur at this point. The intent of this additional discharge location is to provide for a discharge point when maintenance is occurring on the tertiary treatment system.

3. Please contact me at (660) 687-6347 or my Water Program Manager, Robert Bryant, who is the most familiar with this application at (660) 687-3272 or robert.bryant.31@us.af.mil, if you have any questions.

GOLSON, GLENN S., GS-12
Environmental Element Chief

Attachments
Form B2 – Application for operating permit
Form I – Permit Application for Operation of Irrigation Systems
Additional Information

RECEIVED
FEB 17 2016
Water Protection Program

MISSOURI DEPARTMENT OF NATURAL RESOURCES
WATER PROTECTION PROGRAM, WATER POLLUTION CONTROL BRANCH

FORM B2 – APPLICATION FOR OPERATING PERMIT FOR FACILITIES THAT RECEIVE PRIMARILY DOMESTIC WASTE AND HAVE A DESIGN FLOW MORE THAN 100,000 GALLONS PER DAY

FACILITY NAME	
WHITEMAN AIR FORCE BASE	
PERMIT NO.	COUNTY
MO-0029378	JOHNSON

APPLICATION OVERVIEW

Form B2 has been developed in a modular format and consists of Parts A, B and C and a Supplemental Application Information (Parts D, E, F and G) packet. All applicants must complete Parts A, B and C. Some applicants must also complete parts of the Supplemental Application Information packet. The following items explain which parts of Form B2 you must complete. Submittal of an incomplete application may result in the application being returned.

BASIC APPLICATION INFORMATION

A. Basic Application Information for all Applicants. All applicants must complete Part A.

B. Additional Application Information for all Applicants. All applicants must complete Part B.

C. Certification. All applicants must complete Part C.

SUPPLEMENTAL APPLICATION INFORMATION

D. Expanded Effluent Testing Data. A treatment works that discharges effluent to surface water of the United States and meets one or more of the following criteria must complete *Part D - Expanded Effluent Testing Data*:

1. Has a design flow rate greater than or equal to 1 million gallons per day.
2. Is required to have or currently has a pretreatment program.
3. Is otherwise required by the permitting authority to provide the information.

E. Toxicity Testing Data. A treatment works that meets one or more of the following criteria must complete *Part E - Toxicity Testing Data*:

1. Has a design flow rate greater than or equal to 1 million gallons per day.
2. Is required to have or currently has a pretreatment program.
3. Is otherwise required by the permitting authority to provide the information.

F. Industrial User Discharges and Resource Conservation and Recovery Act / Comprehensive Environmental Response, Compensation and Liability Act Wastes. A treatment works that accepts process wastewater from any significant industrial users, also known as SIUs, or receives a Resource Conservation and Recovery Act or CERCLA wastes must complete *Part F - Industrial User Discharges and Resource Conservation and Recovery Act /CERCLA Wastes.*

SIUs are defined as:

1. All Categorical Industrial Users, or CIUs, subject to Categorical Pretreatment Standards under 40 Code of Federal Regulations 403.6 and 40 Code of Federal Regulations 403.6 and 40 CFR Chapter 1, Subchapter N.
2. Any other industrial user that meets one or more of the following:
   - i. Discharges an average of 25,000 gallons per day or more of process wastewater to the treatment works (with certain exclusions).
   - ii. Contributes a process waste stream that makes up five percent or more of the average dry weather hydraulic or organic capacity of the treatment plant.
   - iii. Is designated as an SIU by the control authority.
   - iv. Is otherwise required by the permitting authority to provide the information.

G. Combined Sewer Systems. A treatment works that has a combined sewer system must complete *Part G - Combined Sewer Systems.*

ALL APPLICANTS MUST COMPLETE PARTS A, B and C

RECEIVED

FEB 17 2016

MISSOURI DEPARTMENT OF NATURAL RESOURCES Water Protection Program
WATER PROTECTION PROGRAM, WATER POLLUTION CONTROL BRANCH

FORM B2 – APPLICATION FOR AN OPERATING PERMIT FOR FACILITIES THAT RECEIVE PRIMARILY DOMESTIC WASTE AND HAVE A DESIGN FLOW MORE THAN 100,000 GALLONS PER DAY

FOR AGENCY USE ONLY	
CHECK NUMBER	
DATE RECEIVED	FEE SUBMITTED
2/17/16	-0 SOB

PART A – BASIC APPLICATION INFORMATION

1. THIS APPLICATION IS FOR:

☐ An operating permit for a new or unpermitted facility. Construction Permit # _____
(Include completed Antidegradation Review or request to conduct an Antidegradation Review, see instructions)

☑ An operating permit renewal: Permit #MO- 0029378 Expiration Date SEPTEMBER 30,

☐ An operating permit modification: Permit #MO-_____ Reason: _____

1.1 Is the appropriate fee included with the application (see instructions for appropriate fee)? ☑ YES ☐ NO

2. FACILITY

NAME		TELEPHONE NUMBER WITH AREA CODE	
WHITEMAN AIR FORCE BASE		660-687-3272	
ADDRESS (PHYSICAL)	CITY	STATE	ZIP CODE
174 SE 23 HIGHWAY	WHITEMAN AIR FORCE BASE	MO	65305

2.1 **LEGAL DESCRIPTION** (Facility Site): ¼, SE ¼, SE ¼, Sec. 32 , T 46n , R 24W — COUNTY: JOHNSON

2.2 UTM Coordinates Easting (X): 449337 Northing (Y): 4286831
For Universal Transverse Mercator (UTM), Zone 15 North referenced to North American Datum 1983 (NAD83)

2.3 Name of receiving stream: UNNAMED TRIBUTARY TO BREWER BRANCH (U)

2.4 Number of Outfalls: 2 wastewater outfalls, ~60 stormwater outfalls, 0 instream monitoring sites

3. OWNER

NAME	EMAIL ADDRESS	TELEPHONE NUMBER WITH AREA CODE	
UNITED STATES AIR FORCE	glenn.golson@us.af.mil	660-687-6347	
ADDRESS	CITY	STATE	ZIP CODE
509 CES/CEIE; 660 10TH STREET, SUITE 211	WHITEMAN AFB	MO	65305

3.1 Request review of draft permit prior to Public Notice? ☐ YES ☑ NO

3.2 Are you a Publically Owned Treatment Works (POTW)? ☑ YES ☐ NO
If yes, is the Financial Questionnaire attached? ☐ YES ☑ NO

3.3 Are you a Privately Owned Treatment Facility? ☐ YES ☑ NO

3.4 Are you a Privately Owned Treatment Facility regulated by the Public Service Commission (PSC)? ☐ YES ☑ NO

4. CONTINUING AUTHORITY: Permanent organization which will serve as the continuing authority for the operation, maintenance and modernization of the facility.

NAME	EMAIL ADDRESS	TELEPHONE NUMBER WITH AREA CODE	
UNITED STATES AIR FORCE	glenn.golson@us.af.mil	660-687-6347	
ADDRESS	CITY	STATE	ZIP CODE
509 CES/CEIE; 660 10TH STREET, SUITE 211	WHITEMAN AFB	MO	65305

If the Continuing Authority is different than the Owner, include a copy of the contract agreement between the two parties and a description of the responsibilities of both parties within the agreement.

5. OPERATOR

NAME	TITLE	CERTIFICATE NUMBER (IF APPLICABLE)
PAUL TRACY	SUPERINTENDENT OF UTILITIES	725 (A)
EMAIL ADDRESS	TELEPHONE NUMBER WITH AREA CODE	
paul.tracy@us.af.mil	660-975-1984 or 4735	

6. FACILITY CONTACT

NAME	TITLE		
PAUL TRACY	SUPERINTENDENT OF UTILITIES		
EMAIL ADDRESS	TELEPHONE NUMBER WITH AREA CODE		
paul.tracy@us.af.mil	660-975-1984 or 4735		
ADDRESS	CITY	STATE	ZIP CODE
174 SE 23 HIGHWAY	WHITEMAN AIR FORCE BASE	MO	65305

FACILITY NAME WHITEMAN AFB	PERMIT NO. MO- 0029378	OUTFALL NO. 001 & 004

PART A – BASIC APPLICATION INFORMATION

7. FACILITY INFORMATION

7.1 Process Flow Diagram or Schematic. Provide a diagram showing the processes of the treatment plant. Show all of the treatment units, including disinfection (e.g. – Chlorination and Dechlorination), influents, and outfalls. Specify where samples are taken. Indicate any treatment process changes in the routing of wastewater during dry weather and peak wet weather. Include a brief narrative description of the diagram.
Attach sheets as necessary.

SEE ATTACHED SHEET

7.1 PROCESS FLOW DIAGRAM

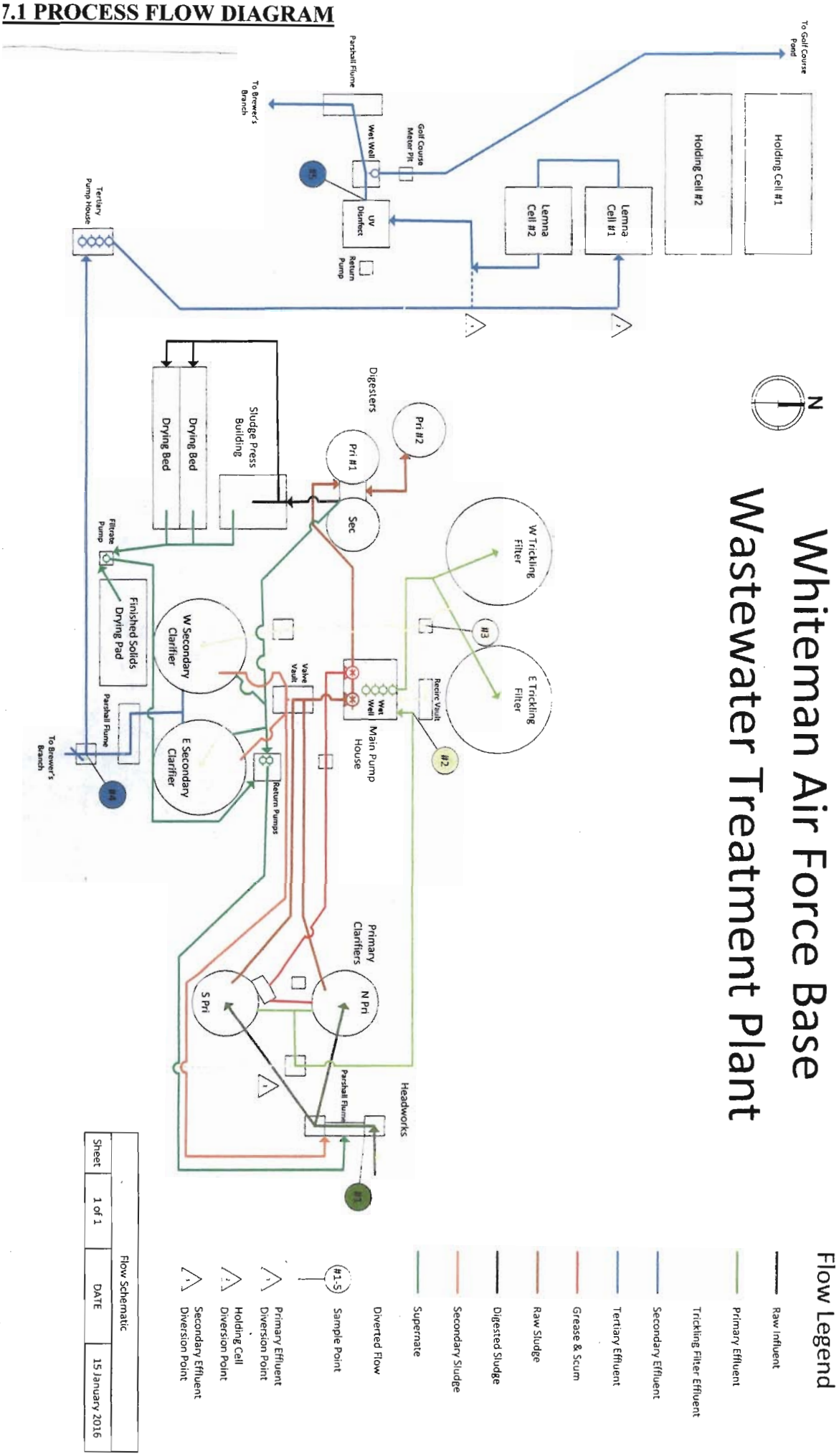

FACILITY NAME	PERMIT NO.	OUTFALL NO.
WHITEMAN AIR FORCE BASE	MO- 0029378	001 & 004

PART A – BASIC APPLICATION INFORMATION

7. FACILITY INFORMATION (continued)

7.2 Topographic Map. Attach to this application a topographic map of the area extending at least one mile beyond facility property boundaries. This map must show the outline of the facility and the following information.

a. The area surrounding the treatment plant, including all unit processes.
b. The location of the downstream landowner(s). (See Item 10.)
c. The major pipes or other structures through which wastewater enters the treatment works and the pipes or other structures through which treated wastewater is discharged from the treatment plant. Include outfalls from bypass piping, if applicable.
d. The actual point of discharge.
e. Wells, springs, other surface water bodies and drinking water wells that are: 1) within ¼ mile of the property boundaries of the treatment works, and 2) listed in public record or otherwise known to the applicant.
f. Any areas where the sewage sludge produced by the treatment works is stored, treated, or disposed.
g. If the treatment works receives waste that is classified as hazardous under the Resource Conservation and Recovery Act (RCRA) by truck, rail, or special pipe, show on the map where that hazardous waste enters the treatment works and where it is treated, stored, or disposed.

7.3 Facility SIC Code: 9711 - NATIONAL SEC | Discharge SIC Code: 4952 - SEWAGE SYS

7.4 Number of people presently connected or population equivalent (P.E.): 9561 Design P.E. 13300

7.5 Connections to the facility:

Number of units presently connected:

Homes 890 Trailers na Apartments na Other (including industrial) ~200

Number of Commercial Establishments: 10

7.6 Design Flow 2.190 MGD | Actual Flow AVG 0.545 MGD

7.7 Will discharge be continuous through the year? Yes ☑ No ☐

Discharge will occur during the following months: How many days of the week will discharge occur?

7.8 Is industrial wastewater discharged to the facility? Yes ☑ No ☐

If yes, describe the number and types of industries that discharge to your facility. Attach sheets as necessary

AIRFIELD OPERATIONS - FLIGHTLINE, MAINTENENCE, REFUELING ETC

Refer to the APPLICATION OVERVIEW to determine whether additional information is needed for Part F.

7.9 Does the facility accept or process leachate from landfills?: Yes ☐ No ☑

7.10 Is wastewater land applied? Yes ☑ No ☐

If yes, is Form I attached? Yes ☑ No ☐

7.11 Does the facility discharge to a losing stream or sinkhole? Yes ☐ No ☑

7.12 Has a wasteload allocation study been completed for this facility? Yes ☐ No ☑

8. LABORATORY CONTROL INFORMATION

LABORATORY WORK CONDUCTED BY PLANT PERSONNEL

Lab work conducted outside of plant.	Yes ☑	No ☐
Push–button or visual methods for simple test such as pH, settleable solids.	Yes ☑	No ☐
Additional procedures such as Dissolved Oxygen, Chemical Oxygen Demand, Biological Oxygen Demand, titrations, solids, volatile content.	Yes ☑	No ☐
More advanced determinations such as BOD seeding procedures, fecal coliform, nutrients, total oils, phenols, etc.	Yes ☑	No ☐
Highly sophisticated instrumentation, such as atomic absorption and gas chromatograph.	Yes ☐	No ☑

7.2 TOGRAPHIC MAP

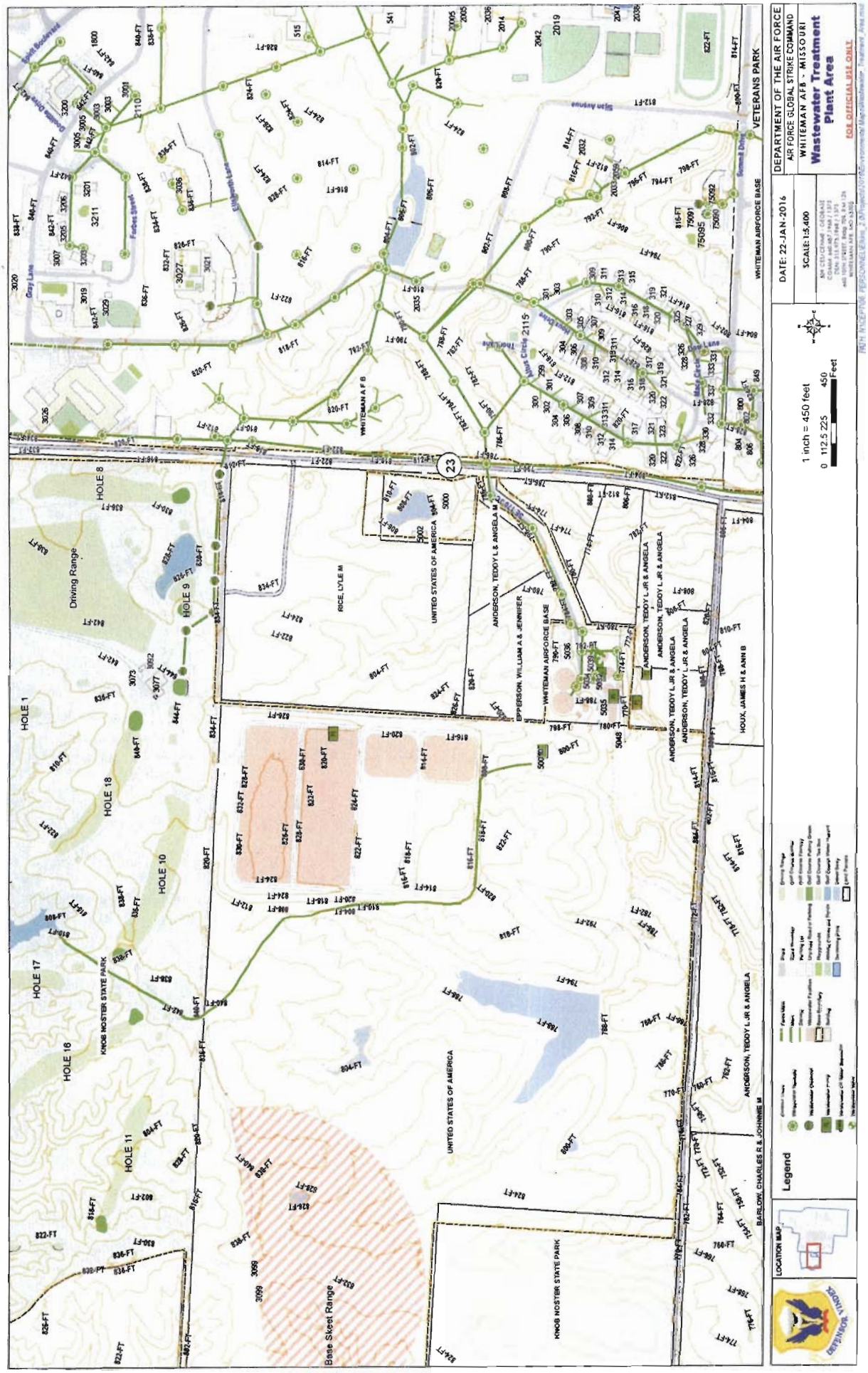

FACILITY NAME	PERMIT NO.	OUTFALL NO.
WHITEMAN AIR FORCE BASE	MO- 0029378	001 & 004

PART A – BASIC APPLICATION INFORMATION

9. SLUDGE HANDLING, USE AND DISPOSAL

9.1 Is the sludge a hazardous waste as defined by 10 CSR 25? Yes ☐ No ☑

9.2 Sludge production (Including sludge received from others): Design Dry Tons/Year Actual Dry Tons/Year 41.9

9.3 Sludge storage provided: 9900 Cubic feet; _____ Days of storage; 22.3 Average percent solids of sludge;

☐ No sludge storage is provided. ☐ Sludge is stored in lagoon.

9.4 Type of storage:
☑ Holding Tank ☐ Building
☐ Basin ☐ Lagoon
☐ Concrete Pad ☐ Other (Describe) _____

9.5 Sludge Treatment:
☑ Anaerobic Digester ☐ Storage Tank ☐ Lime Stabilization ☐ Lagoon
☐ Aerobic Digester ☐ Air or Heat Drying ☐ Composting ☐ Other (Attach Description)

9.6 Sludge use or disposal:
☐ Land Application ☐ Contract Hauler ☐ Hauled to Another Treatment Facility ☑ Solid Waste Landfill
☐ Surface Disposal (Sludge Disposal Lagoon, Sludge Held For More Than Two Years) ☐ Incineration
☐ Other (Attach Explanation Sheet) _____

9.7 Person responsible for hauling sludge to disposal facility:
☐ By Applicant ☐ By Others (complete below)

NAME	EMAIL ADDRESS
HEARTLAND WASTE	heartlandwaste@hotmail.com

ADDRESS	CITY	STATE	ZIP CODE
12 NE Z HIGHWAY	WARRENSBURG	MO	64093

CONTACT PERSON	TELEPHONE NUMBER WITH AREA CODE	PERMIT NO.
MARY BUSH	660-429-1040	MO- na

9.8 Sludge use or disposal facility:
☐ By Applicant ☑ By Others (Complete below)

NAME	EMAIL ADDRESS
SHOW ME REGIONAL LANDFILL	ademoret@republicservices.com

ADDRESS	CITY	STATE	ZIP CODE
230 SE 421 ROUTE 3	WARRENSBURG	MO	64093

CONTACT PERSON	TELEPHONE NUMBER WITH AREA CODE	PERMIT NO.
Amber Demoret	660-747-7697	MO- 0116254

9.9 Does the sludge or biosolids disposal comply with Federal Sludge Regulation 40 CFR 503?
☑ Yes ☐ No (Explain)

LANDFILLED NOT USED FOR COVER

END OF PART A

FACILITY NAME	PERMIT NO.	OUTFALL NO.
WHITEMAN AIR FORCE BASE	MO- 0029378	OUTFALL 001 & 004

PART B – ADDITIONAL APPLICATION INFORMATION

10. COLLECTION SYSTEM

10.1 Length of sanitary sewer collection system in miles
39.10

10.2 Does significant infiltration occur in the collection system? ☑ Yes ☐ No
If yes, briefly explain any steps underway or planned to minimize inflow and infiltration:

ONGOING I&I STUDIES AND PROJECTS TO LOCATE AND CORRECT INFILITRATION

11. BYPASSING

Does any bypassing occur anywhere in the collection system or at the treatment facility? Yes ☑ No ☐
If yes, explain:

OCASSIONAL BYPASS OCCURS AT THE WWTP WHEN THERE IS AN ISSUE AT THE FINAL PUMP HOUSE - AND THE TREATED EFFLUENT DOES NOT GET SENT TO TERTIARY TREATMENT CELLS AND IS DIRECTLY DISCHARGED TO RECEIVING STREAM. BYPASS GENERALLY LASTS LESS THAN SEVERAL HOURS UNTIL PUMPS CAN BE BROUGHT BACK ON LINE.

12. OPERATION AND MAINTENANCE PERFORMED BY CONTRACTOR(S)

Are any operational or maintenance aspects (related to wastewater treatment and effluent quality) of the treatment works the responsibility of the contractor?
Yes ☐ No ☑
If Yes, list the name, address, telephone number and status of each contractor and describe the contractor's responsibilities. (Attach additional pages if necessary.)

NAME	
MAILING ADDRESS	
TELEPHONE NUMBER WITH AREA CODE	EMAIL ADDRESS
RESPONSIBILITIES OF CONTRACTOR	

13. SCHEDULED IMPROVEMENTS AND SCHEDULES OF IMPLEMENTATION

Provide information about any uncompleted implementation schedule or uncompleted plans for improvements that will affect the wastewater treatment, effluent quality, or design capacity of the treatment works. If the treatment works has several different implementation schedules or is planning several improvements, submit separate responses for each.

Planned upgrades to the anaerobic digester, the plan has been "designed" but waiting on funding. The project is not scheduled for 2016 possibly on schedule for 2017 should funding become available.

FACILITY NAME	PERMIT NO.	OUTFALL NO.
WHITEMAN AIR FORCE BASE	MO- 0029378	001

PART B – ADDITIONAL APPLICATION INFORMATION

14. EFFLUENT TESTING DATA

Applicants must provide effluent testing data for the following parameters. Provide the indicated effluent data **for each outfall through which effluent is discharged**. Do not include information of combined sewer overflows in this section. All information reported must be based on data collected through analysis conducted using 40 CFR Part 136 methods. In addition, this data must comply with QA/QC requirements of 40 CFR Part 136 and other appropriate QA/QC requirements for standard methods for analytes not addressed by 40 CFR Part 136. At a minimum, effluent testing data must be based on at least **three samples** and must be no more than four and one-half years apart.

Outfall Number

PARAMETER	MAXIMUM DAILY VALUE		AVERAGE DAILY VALUE		
	Value	Units	Value	Units	Number of Samples
pH (Minimum)	6.3	S.U.	NA	S.U.	365
pH (Maximum)	7.8	S.U.	NA	S.U.	365
Flow Rate	1.750	MGD	0.715	MGD	365

*For pH report a minimum and a maximum daily value

POLLUTANT		MAXIMUM DAILY DISCHARGE		AVERAGE DAILY DISCHARGE			ANALYTICAL METHOD	ML/MDL
		Conc.	Units	Conc.	Units	Number of Samples		
Conventional and Nonconventional Compounds								
BIOCHEMICAL OXYGEN DEMAND (Report One)	BOD_5	11.0	mg/L	5.2	mg/L	54	SM 5210 B-2001	
	$CBOD_5$		mg/L		mg/L			
E. COLI		12.0	#/100 mL	2.86	#/100 mL	29		
TOTAL SUSPENDED SOLIDS (TSS)		6	mg/L	2.4	mg/L	54	SM 2540 D-	
AMMONIA (as N)		2.76	mg/L	0.8	mg/L	54	SM 4500-NH3	
CHLORINE* (TOTAL RESIDUAL, TRC)		NA	mg/L	NA	mg/L	NA		
DISSOLVED OXYGEN		9.3	mg/L	8.0	mg/L	54	SM 4500-O	
OIL and GREASE		2.1	mg/L	1.05	mg/L	4	EPA 9070A/1664A	
OTHER		NA	mg/L	NA	mg/L	NA		

*Report only if facility chlorinates

END OF PART B

FACILITY NAME	PERMIT NO.	OUTFALL NO.
WHITEMAN AIR FORCE BASE	MO- 0029378	004

PART B – ADDITIONAL APPLICATION INFORMATION

14. EFFLUENT TESTING DATA

Applicants must provide effluent testing data for the following parameters. Provide the indicated effluent data **for each outfall through which effluent is discharged**. Do not include information of combined sewer overflows in this section. All information reported must be based on data collected through analysis conducted using 40 CFR Part 136 methods. In addition, this data must comply with QA/QC requirements of 40 CFR Part 136 and other appropriate QA/QC requirements for standard methods for analytes not addressed by 40 CFR Part 136. At a minimum, effluent testing data must be based on at least **three samples** and must be no more than four and one-half years apart.

Outfall Number

PARAMETER	MAXIMUM DAILY VALUE		AVERAGE DAILY VALUE		
	Value	Units	Value	Units	Number of Samples
pH (Minimum)	6.9	S.U.	NA	S.U.	92
pH (Maximum)	7.8	S.U.	NA	S.U.	92
Flow Rate	0.523	MGD	0.253	MGD	92

*For pH report a minimum and a maximum daily value

POLLUTANT		MAXIMUM DAILY DISCHARGE		AVERAGE DAILY DISCHARGE			ANALYTICAL METHOD	ML/MDL
		Conc.	Units	Conc.	Units	Number of Samples		
Conventional and Nonconventional Compounds								
BIOCHEMICAL OXYGEN DEMAND (Report One)	BOD_5	7.0	mg/L	3.15	mg/L	13	SM 5210 B-2001	
	$CBOD_5$		mg/L		mg/L			
E. COLI		12.0	#/100 mL	2.94	#/100 mL	33	SM9223B	
TOTAL SUSPENDED SOLIDS (TSS)		6	mg/L	2.57	mg/L	13	SM 2540 D-	
AMMONIA (as N)		1.17	mg/L	0.473	mg/L	13	SM 4500-NH3	
CHLORINE* (TOTAL RESIDUAL, TRC)			mg/L		mg/L			
DISSOLVED OXYGEN		8.8	mg/L	6.75	mg/L	92	SM 4500-O	
OIL and GREASE		2.1	mg/L	1.05	mg/L	4	EPA 9070A/1664A	
OTHER			mg/L		mg/L			

*Report only if facility chlorinates

END OF PART B

FACILITY NAME	PERMIT NO.	OUTFALL NO.
WHITEMAN AIR FORCE BASE	MO- 0029378	001 & 004

PART C – CERTIFICATION

15. CERTIFICATION

All applicants must complete the Certification Section. This certification must be signed by an officer of the company or city official. All applicants must complete all applicable sections as explained in the Application Overview. By signing this certification statement, applicants confirm that they have reviewed the entire form and have completed all sections that apply to the facility for which this application is submitted.

ALL APPLICANTS MUST COMPLETE THE FOLLOWING CERTIFICATION.

I certify under penalty of law that this document and all attachments were prepared under my direction or supervision in accordance with a system designed to assure that qualified personnel properly gather and evaluate the information submitted. Based on my inquiry of the person or persons who manage the system or those persons directly responsible for gathering the information, the information is, to the best of my knowledge and belief, true, accurate and complete. I am aware that there are significant penalties for submitting false information, including the possibility of fine and imprisonment for knowing violations.

PRINTED NAME	OFFICIAL TITLE (MUST BE AN OFFICER OF THE COMPANY OR CITY OFFICIAL)
GLENN GOLSON	ENVIRONMENTAL ELEMENT CHIEF

SIGNATURE

TELEPHONE NUMBER WITH AREA CODE

660-687-6347

DATE SIGNED

16 FEB 16

Upon request of the permitting authority, you must submit any other information necessary to assess wastewater treatment practices at the treatment works or identify appropriate permitting requirements.

Send Completed Form to:

Department of Natural Resources
Water Protection Program
ATTN: NPDES Permits and Engineering Section
P.O. Box 176
Jefferson City, MO 65102

END OF PART C
REFER TO THE APPLICATION OVERVIEW TO DETERMINE WHICH PARTS OF FORM B2 YOU MUST COMPLETE.

Do not complete the remainder of this application, unless at least one of the following statements applies to your facility:

1. Your facility design flow is equal to or greater than 1,000,000 gallons per day.
2. Your facility is a pretreatment treatment works.
3. Your facility is a combined sewer system.

Submittal of an incomplete application may result in the application being returned. Permit fees for returned applications shall be forfeited. Permit fees for applications being processed by the department that are withdrawn by the applicant shall be forfeited.

MAKE ADDITIONAL COPIES OF THIS FORM FOR EACH OUTFALL

FACILITY NAME	PERMIT NO.	OUTFALL NO.
WHITEMAN AIR FORCE BASE	MO- 0029378	001 & 004

PART D – EXPANDED EFFLUENT TESTING DATA

16. EXPANDED EFFLUENT TESTING DATA

Refer to the APPLICATION OVERVIEW to determine whether Part D applies to the treatment works.

If the treatment works has a design flow greater than or equal to 1 million gallons per day or it has (or is required to have) a pretreatment program, or is otherwise required by the permitting authority to provide the data, then provide effluent testing data for the following pollutants. Provide the indicated effluent testing information **for each outfall through which effluent is discharged.** Do not include information of combined sewer overflows in this section. All information reported must be based on data collected through analysis conducted using 40 CFR Part 136 methods. The facility shall use sufficiently sensitive analytical methods for detecting, identifying, and measuring the concentrations of pollutants. In addition, this data must comply with QA/QC requirements of 40 CFR Part 136 and other appropriate QA/QC requirements for standard methods for analytes not addressed by 40 CFR Part 136. Indicate in the blank rows provided below any data you may have on pollutants not specifically listed in this form. At a minimum, effluent testing data must be based on at least **three pollutant scans** and must be no more than four and one-half years apart.

Outfall Number (Complete Once for Each Outfall Discharging Effluent to Waters of the State.)

POLLUTANT	MAXIMUM DAILY DISCHARGE				AVERAGE DAILY DISCHARGE					ANALYTICAL METHOD	ML/MDL
	Conc.	Units	Mass	Units	Conc.	Units	Mass	Units	No. of Samples		
METALS (TOTAL RECOVERABLE), CYANIDE, PHENOLS AND HARDNESS											
ALUMINUM	156	µg/L	0.009	lbs	110.67	µg/L	0.0066	lbs	4	SM 200.7	50 µg/L
ANTIMONY	ND	µg/L	ND	lbs	ND	µg/L	ND	lbs	4	SM 200.7	5.00 µg/L
ARSENIC	ND	µg/L	ND	lbs	ND	µg/L	ND	lbs	4	SM 200.7	10µg/L
BERYLLIUM	ND	µg/L	ND	lbs	ND	µg/L	ND	lbs	4	SM 200.7	1.00 µg/L
CADMIUM	<1.0	µg/L	ND	lbs	<1.0	µg/L	ND	LBS	4	SM 200.7	1.00 µg/L
CHROMIUM III	ND	µg/L	ND	lbs	ND	µg/L	ND	lbs	4	SM 200.7	.004 µg/L
CHROMIUM VI	<2	µg/L	ND	lbs	<0.257	µg/L	ND	LBS	4	SM 3500-CR	0.01 µg/L
COPPER	7.72	µg/L	ND	lbs	6.105	µg/L	ND	LBS	4	SM 200.7	4.00 µg/L
IRON	63.8	µg/L	3.72	lbs	59.55	µg/L	3.48	lbs	4	SM 200.7	30.0 µg/L
LEAD	<1.5	µg/L	ND	lbs	<1.5	µg/L	ND	LBS	4	SM 200.7	1.50 µg/L
MERCURY	ND	µg/L	ND	lbs	ND	µg/L	ND	lbs	1*	SM 245.1	0.20 µg/L
NICKEL	<3.0	µg/L	ND	lbs	<3.0	µg/L	ND	LBS	4	SM 200.7	3.00 µg/L
SELENIUM	ND	µg/L	ND	lbs	ND	µg/L	ND	lbs	4	SM 200.7	3.00 µg/L
SILVER	<1.0	µg/L	ND	lbs	<1.0	µg/L	ND	LBS	4	SM 200.7	1.00 µg/L
THALLIUM	ND	µg/L	ND	lbs	ND	µg/L	ND	lbs	4	SM 200.7	3.00 µg/L
ZINC	33.8	µg/L	0.0002	lbs	28.5	µg/L	0.0002	LBS	4	SM 200.7	0.005 µg/
CYANIDE	<5.0	mg/L	<14.91	lbs	<5.0	mg/l	<14.91	LBS	4	SM4500CN	0.005mgl
TOTAL PHENOLIC COMPOUNDS	<20.0	µg/L	ND	lbs	<20.0	µg/L	ND	LBS	4	EPA 420.4	20.0 µg/L
HARDNESS (as $CaCO_3$)	193	mg/l	11.43	lbs	181	mg/l	10.72	lbs	4	cal	6.60 mg/l
VOLATILE ORGANIC COMPOUNDS											
ACROLEIN	bdl	µg/L	ND	lbs	bdl	µg/L	ND	lbs	4	EPA 624	50 µg/L
ACRYLONITRILE	bdl	µg/L	ND	lbs	bdl	µg/L	ND	lbs	4	EPA 624	70 µg/L
BENZENE	bdl	µg/L	ND	lbs	bdl	µg/L	ND	lbs	4	EPA 624	5.0 µg/L
BROMOFORM	bdl	µg/L	ND	lbs	bdl	µg/L	ND	lbs	4	EPA 624	5.0 µg/L
CARBON TETRACHLORIDE	bdl	µg/L	ND	lbs	bdl	µg/L	ND	lbs	4	EPA 624	5.0 µg/L

FACILITY NAME	PERMIT NO.	OUTFALL NO.
WHITEMAN AFB	MO- 0029378	001 & 004

PART D – EXPANDED EFFLUENT TESTING DATA

16. EXPANDED EFFLUENT TESTING DATA

Complete Once for Each Outfall Discharging Effluent to Waters of the State

POLLUTANT	MAXIMUM DAILY DISCHARGE				AVERAGE DAILY DISCHARGE					ANALYTICAL METHOD	ML/MDL
	Conc.	Units	Mass	Units	Conc.	Units	Mass	Units	No. of Samples		
CHLOROBENZENE	bdl	µg/L	ND	lbs	bdl	µg/L	ND	lbs	4	EPA 624	5.0 µg/L
CHLORODIBROMO-METHANE	bdl	µg/L	ND	lbs	bdl	µg/L	ND	lbs	4	EPA 624	5.0 µg/L
CHLOROETHANE	bdl	µg/L	ND	lbs	bdl	µg/L	ND	lbs	4	EPA 624	10 µg/L
2-CHLORO-ETHYLVINYL ETHER	bdl	µg/L	ND	lbs	bdl	µg/L	ND	lbs	4	EPA 624	10 µg/L
CHLOROFORM	bdl	µg/L	ND	lbs	bdl	µg/L	ND	lbs	4	EPA 624	5.0 µg/L
DICHLOROBROMO-METHANE	bdl	µg/L	ND	lbs	bdl	µg/L	ND	lbs	4	EPA 624	5.0 µg/L
1,1-DICHLORO-ETHANE	bdl	µg/L	ND	lbs	bdl	µg/L	ND	lbs	4	EPA 624	5.0 µg/L
1,2-DICHLORO-ETHANE	bdl	µg/L	ND	lbs	bdl	µg/L	ND	lbs	4	EPA 624	5.0 µg/L
TRANS-1,2-DICHLOROETHYLENE	bdl	µg/L	ND	lbs	bdl	µg/L	ND	lbs	4	EPA 624	5.0 µg/L
1,1-DICHLORO-ETHYLENE	bdl	µg/L	ND	lbs	bdl	µg/L	ND	lbs	4	EPA 624	5.0 µg/L
1,2-DICHLORO-PROPANE	bdl	µg/L	ND	lbs	bdl	µg/L	ND	lbs	4	EPA 624	5.0 µg/L
1,3-DICHLORO-PROPYLENE	bdl	µg/L	ND	lbs	bdl	µg/L	ND	lbs	4	EPA 624	5.0 µg/L
ETHYLBENZENE	bdl	µg/L	ND	lbs	bdl	µg/L	ND	lbs	4	EPA 624	5.0 µg/L
METHYL BROMIDE	bdl	µg/L	ND	lbs	bdl	µg/L	ND	lbs	4	EPA 624	10 µg/L
METHYL CHLORIDE	bdl	µg/L	ND	lbs	bdl	µg/L	ND	lbs	4	EPA 624	10 µg/L
METHYLENE CHLORIDE	bdl	µg/L	ND	lbs	bdl	µg/L	ND	lbs	4	EPA 624	5.0 µg/L
1,1,2,2-TETRA-CHLOROETHANE	bdl	µg/L	ND	lbs	bdl	µg/L	ND	lbs	4	EPA 624	5.0 µg/L
TETRACHLORO-ETHANE	bdl	µg/L	ND	lbs	bdl	µg/L	ND	lbs	4	EPA 624	5.0 µg/L
TOLUENE	bdl	µg/L	ND	lbs	bdl	µg/L	ND	lbs	4	EPA 624	5.0 µg/L
1,1,1-TRICHLORO-ETHANE	bdl	µg/L	ND	lbs	bdl	µg/L	ND	lbs	4	EPA 624	5.0 µg/L
1,1,2-TRICHLORO-ETHANE	bdl	µg/L	ND	lbs	bdl	µg/L	ND	lbs	4	EPA 624	5.0 µg/L
TRICHLORETHYLENE	bdl	µg/L	ND	lbs	bdl	µg/L	ND	lbs	4	EPA 624	5.0 µg/L
VINYL CHLORIDE	bdl	µg/L	ND	lbs	bdl	µg/L	ND	lbs	4	EPA 624	10 µg/L
ACID-EXTRACTABLE COMPOUNDS											
P-CHLORO-M-CRESOL	bdl	µg/L	ND	lbs	bdl	µg/L	ND	lbs	4	EPA 625	10 µg/L
2-CHLOROPHENOL	bdl	µg/L	ND	lbs	bdl	µg/L	ND	lbs	4	EPA 625	10 µg/L
2,4-DICHLOROPHENOL	bdl	µg/L	ND	lbs	bdl	µg/L	ND	lbs	4	EPA 625	10 µg/L
2,4-DIMETHYLPHENOL	bdl	µg/L	ND	lbs	bdl	µg/L	ND	lbs	4	EPA 625	10 µg/L
4,6-DINITRO-O-CRESOL	bdl	µg/L	ND	lbs	bdl	µg/L	ND	lbs	4	EPA 625	10 µg/L
2,4-DINITROPHENOL	bdl	µg/L	ND	lbs	bdl;	µg/L	ND	lbs	4	EPA 625	10 µg/L
2-NITROPHENOL	bdl	µg/L	ND	lbs	bdl	µg/L	ND	lbs	4	EPA 625	10 µg/L
4-NITROPHENOL	bdl	µg/L	ND	lbs	bdl	µg/L	ND	lbs	4	EPA 625	50 µg/L

FACILITY NAME WHITEMAN AFB	PERMIT NO. MO- 0029378	OUTFALL NO. 001 & 004

PART D – EXPANDED EFFLUENT TESTING DATA

16. EXPANDED EFFLUENT TESTING DATA

Complete Once for Each Outfall Discharging Effluent to Waters of the State.

POLLUTANT	MAXIMUM DAILY DISCHARGE				AVERAGE DAILY DISCHARGE					ANALYTICAL METHOD	ML/MDL
	Conc.	Units	Mass	Units	Conc.	Units	Mass	Units	No. of Samples		
PENTACHLOROPHENOL	bdl	µg/L	ND	lbs	bdl	µg/L	ND	lbs	4	EPA 625	50 µg/L
PHENOL	bdl	µg/L	ND	lbs	bdl	µg/L	ND	lbs	4	EPA 625	10 µg/L
2,4,6-TRICHLOROPHENOL	bdl	µg/L	ND	lbs	bdl	µg/L	ND	lbs	4	EPA 625	10 µg/L
BASE-NEUTRAL COMPOUNDS											
ACENAPHTHENE	bdl	µg/L	ND	lbs	bdl	µg/L	ND	lbs	4	EPA 625	10 µg/L
ACENAPHTHYLENE	bdl	µg/L	ND	lbs	BDL	µg/L	ND	LBS	4	EPA 625	10 µg/L
ANTHRACENE	bdl	µg/L	ND	lbs	bdl	µg/L	ND	lbs	4	EPA 625	10 µg/L
BENZIDINE	bdl	µg/L	ND	lbs	bdl	µg/L	ND	lbs	4	EPA 625	10 µg/L
BENZO(A)ANTHRACENE	bdl	µg/L	ND	lbs	bdl	µg/L	ND	lbs	4	EPA 625	10 µg/L
BENZO(A)PYRENE	bdl	µg/L	ND	lbs	bdl	µg/L	ND	lbs	4	EPA 625	10 µg/L
3,4-BENZO-FLUORANTHENE	bdl	µg/L	ND	lbs	bdl	µg/L	ND	lbs	4	EPA 625	10 µg/L
BENZO(GH) PHERYLENE	bdl	µg/L	ND	lbs	bdl	µg/L	ND	lbs	4	EPA 625	10 µg/L
BENZO(K) FLUORANTHENE	bdl	µg/L	ND	lbs	bdl	µg/L	ND	lbs	4	EPA 625	10 µg/L
BIS (2-CHLOROTHOXY) METHANE	bdl	µg/L	ND	lbs	bdl	µg/L	ND	lbs	4	EPA 625	10 µg/L
BIS (2-CHLOROETHYL) – ETHER	bdl	µg/L	ND	lbs	bdl	µg/L	ND	lbs	4	EPA 625	10 µg/L
BIS (2-CHLOROISO-PROPYL) ETHER	bdl	µg/L	ND	lbs	bdl	µg/L	ND	lbs	4	EPA 625	10 µg/L
BIS (2-ETHYLHEXYL) PHTHALATE	bdl	µg/L	ND	lbs	bdl	µg/L	ND	lbs	4	EPA 625	10 µg/L
4-BROMOPHENYL PHENYL ETHER	bdl	µg/L	ND	lbs	bdl	µg/L	ND	lbs	4	EPA 625	10 µg/L
BUTYL BENZYL PHTHALATE	bdl	µg/L	ND	lbs	bdl	µg/L	ND	lbs	4	EPA 625	10 µg/L
2-CHLORONAPH-THALENE	bdl	µg/L	ND	lbs	bdl	µg/L	ND	lbs	4	EPA 625	10 µg/L
4-CHLORPHENYL PHENYL ETHER	bdl	µg/L	ND	lbs	bdl	µg/L	ND	lbs	4	EPA 625	10 µg/L
CHRYSENE	bdl	µg/L	ND	ls	bdl	µg/L	ND	lbs	4	EPA 625	10 µg/L
DI-N-BUTYL PHTHALATE	bdl	µg/L	ND	lbs	bdl	µg/L	ND	lbs	4	EPA 625	10 µg/L
DI-N-OCTYL PHTHALATE	bdl	µg/L	ND	lbs	bdl	µg/L	ND	lbs	4	EPA 625	10 µg/L
DIBENZO (A,H) ANTHRACENE	bdl	µg/L	ND	lbs	bdl	µg/L	ND	lbs	4	EPA 625	10 µg/L
1,2-DICHLORO-BENZENE	bdl	µg/L	ND	lbs	bdl	µg/L	ND	lbs	4	EPA 625	10 µg/L
1,3-DICHLORO-BENZENE	bdl	µg/L	ND	lbs	bdl	µg/L	ND	lbs	4	EPA 625	10 µg/L
1,4-DICHLORO-BENZENE	bdl	µg/L	ND	lbs	bdl	µg/L	ND	lbs	4	EPA 625	10 µg/L
3,3-DICHLORO-BENZIDINE	bdl	µg/L	ND	lbs	bdl	µg/L	ND	lbs	4	EPA 625	20 µg/L
DIETHYL PHTHALATE	bdl	µg/L	ND	lbs	bdl	µg/L	ND	lbs	4	EPA 625	10 µg/L
DIMETHYL PHTHALATE	bdl	µg/L	ND	lbs	bdl	µg/L	ND	lbs	4	EPA 625	10 µg/L

FACILITY NAME	PERMIT NO.	OUTFALL NO.
WHITEMAN AFB	MO- 0029378	001 & 004

PART D – EXPANDED EFFLUENT TESTING DATA

16. EXPANDED EFFLUENT TESTING DATA

Complete Once for Each Outfall Discharging Effluent to Waters of the State.

POLLUTANT	MAXIMUM DAILY DISCHARGE				AVERAGE DAILY DISCHARGE					ANALYTICAL METHOD	ML/MDL
	Conc.	Units	Mass	Units	Conc.	Units	Mass	Units	No. of Samples		
2,4-DINITRO-TOLUENE	bdl	µg/L	ND	lbs	bdl	µg/L	ND	lbs	4	EPA 625	10 µg/L
2,6-DINITRO-TOLUENE	bdl	µg/L	ND	lbs	bdl	µg/L	ND	lbs	4	EPA 625	10 µg/L
1,2-DIPHENYL-HYDRAZINE	bdl	µg/L	ND	lbs	bdl	µg/L	ND	lbs	4	EPA 625	10 µg/L
FLUORANTHENE	bdl	µg/L	ND	lbs	bdl	µg/L	ND	lbs	4	EPA 625	10 µg/L
FLUORENE	bdl	µg/L	ND	lbs	bdl	µg/L	ND	lbs	4	EPA 625	10 µg/L
HEXACHLOROBENZENE	bdl	µg/L	ND	lbs	bdl	µg/L	ND	lbs	4	EPA 625	10 µg/L
HEXACHLOROBUTADIENE	bdl	µg/L	ND	lbs	bdl	µg/L	ND	lbs	4	EPA 625	10 µg/L
HEXACHLOROCYCLO-PENTADIENE	bdl	µg/L	ND	lbs	bdl	µg/L	ND	lbs	4	EPA 625	10 µg/L
HEXACHLOROETHANE	bdl	µg/L	ND	lbs	bdl	µg/L	ND	lbs	4	EPA 625	10 µg/L
INDENO (1,2,3-CD) PYRENE	bdl	µg/L	ND	lbs	bdl	µg/L	ND	lbs	4	EPA 625	10 µg/L
ISOPHORONE	bdl	µg/L	ND	lbs	bdl	µg/L	ND	lbs	4	EPA 625	10 µg/L
NAPHTHALENE	bdl	µg/L	ND	lbs	bdl	µg/L	ND	lbs	4	EPA 625	10 µg/L
NITROBENZENE	bdl	µg/L	ND	lbs	bdl	µg/L	ND	lbs	4	EPA 625	10 µg/L
N-NITROSODI-PROPYLAMINE	bdl	µg/L	ND	lbs	bdl	µg/L	ND	lbs	4	EPA 625	10 µg/L
N-NITROSODI-METHYLAMINE	bdl	µg/L	ND	lbs	bdl	µg/L	ND	lbs	4	EPA 625	10 µg/L
N-NITROSODI-PHENYLAMINE	dbl	µg/L	ND	lbs	bdl	µg/L	ND	lbs	4	EPA 625	10 µg/L
PHENANTHRENE	bdl	µg/L	ND	lbs	bdl	µg/L	ND	lbs	4	EPA 625	10 µg/L
PYRENE	bdl	µg/L	ND	lbs	bdl	µg/L	ND	lbs	4	EPA 625	10 µg/L
1,2,4-TRICHLOROBENZENE	bdl	µg/L	ND	lbs	bdl	µg/L	ND	lbs	4	EPA 625	10 µg/L

Use this space (or a separate sheet) to provide information on other pollutants not specifically listed in this form.

see attached sheet											
* see attached sheet											
for information on											
mercury results											

END OF PART D

REFER TO THE APPLICATION OVERVIEW TO DETERMINE WHICH OTHER PARTS OF FORM B2 YOU MUST COMPLETE.

Pollutant	Max daily discharge				AVERAGE DAILY DISCHARGE				NUMBER OF SAMPLES	ANALYTICAL METHOD	ML/MDL
	CONC	UNIT	MASS	UNIT	CONC	UNIT	MASS	UNIT			
1,1-DICHLOROETHENE	BDL	ug/L	ND	LBS	BDL	ug/L	ND	LBS	2	EPA 624	5.0 ug/L
1,2-DICHLOROETHENE (TOTAL)	BDL	ug/L	ND	LBS	BDL	ug/L	ND	LBS	2	EPA 624	10 ug/L
CIS-1,3-DICHLOROPROPENE	BDL	ug/L	ND	LBS	BDL	ug/L	ND	LBS	2	EPA 624	10 ug/L
TETRACHLORETHENE	BDL	ug/L	ND	LBS	BDL	ug/L	ND	LBS	2	EPA 624	10 ug/L
TRANS-1,3-DICHLOROPROPENE	BDL	ug/L	ND	LBS	BDL	ug/L	ND	LBS	2	EPA 624	50 ug/L
TRICHLOROFLUOROMETHANE	BDL	ug/L	ND	LBS	BDL	ug/L	ND	LBS	2	EPA 624	50 ug/L
4,4'-DDD	BDL	ug/L	ND	LBS	BDL	ug/L	ND	LBS	2	EPA 625	10 ug/L
4,4'-DDE	BDL	ug/L	ND	LBS	BDL	ug/L	ND	LBS	2	EPA 625	5.0 ug/L
4,4'-DDT	BDL	ug/L	ND	LBS	BDL	ug/L	ND	LBS	2	EPA 625	5.0 ug/L
4,6-DINITRO-2-METHYLPHENOL	BDL	ug/L	ND	LBS	BDL	ug/L	ND	LBS	2	EPA 625	5.0 ug/L
4-CHLORO-3-METHYLPHENOL	BDL	ug/L	ND	LBS	BDL	ug/L	ND	LBS	2	EPA 625	10 ug/L
ALDRIN	BDL	ug/L	ND	LBS	BDL	ug/L	ND	LBS	2	EPA 625	10 ug/L
ALPHA-BHC	BDL	ug/L	ND	LBS	BDL	ug/L	ND	LBS	2	EPA 625	10 ug/L
ALPHA-ENDOSULFAN	BDL	ug/L	ND	LBS	BDL	ug/L	ND	LBS	2	EPA 625	10 ug/L
BENZ(A)ANTHRACENE	BDL	ug/L	ND	LBS	BDL	ug/L	ND	LBS	2	EPA 625	10 ug/L
BETA-BHC	BDL	ug/L	ND	LBS	BDL	ug/L	ND	LBS	2	EPA 625	10 ug/L
BETA-ENDOSULFAN	BDL	ug/L	ND	LBS	BDL	ug/L	ND	LBS	2	EPA 625	10 ug/L
BIS(2-CHLOROETHOXY)METHAN	BDL	ug/L	ND	LBS	BDL	ug/L	ND	LBS	2	EPA 625	10 ug/L
CHLORDANE	BDL	ug/L	ND	LBS	BDL	ug/L	ND	LBS	2	EPA 625	10 ug/L
DELTA-BHC	BDL	ug/L	ND	LBS	BDL	ug/L	ND	LBS	2	EPA 625	10 ug/L
DIELDRIN	BDL	ug/L	ND	LBS	BDL	ug/L	ND	LBS	2	EPA 625	50 ug/L
ENDOSULFAN SULFATE	BDL	ug/L	ND	LBS	BDL	ug/L	ND	LBS	2	EPA 625	10 ug/L
ENDRIN	BDL	ug/L	ND	LBS	BDL	ug/L	ND	LBS	2	EPA 625	50 ug/L
ENDRIN ALDEHYDE	BDL	ug/L	ND	LBS	BDL	ug/L	ND	LBS	2	EPA 625	50 ug/L
GAMMA-BHC (LINDANE)	BDL	ug/L	ND	LBS	BDL	ug/L	ND	LBS	2	EPA 625	10 ug/L
HEPTACHLOR	BDL	ug/L	ND	LBS	BDL	ug/L	ND	LBS	2	EPA 625	10 ug/L
HEPTACHLOR EPOXIDE	BDL	ug/L	ND	LBS	BDL	ug/L	ND	LBS	2	EPA 625	10 ug/L
PCB AROCLOR 1016	BDL	ug/L	ND	LBS	BDL	ug/L	ND	LBS	2	EPA 625	10 ug/L
PCB AROCLOR 1221	BDL	ug/L	ND	LBS	BDL	ug/L	ND	LBS	2	EPA 625	10 ug/L
PCB AROCLOR 1232	BDL	ug/L	ND	LBS	BDL	ug/L	ND	LBS	2	EPA 625	10 ug/L
PCB AROCLOR 1242	BDL	ug/L	ND	LBS	BDL	ug/L	ND	LBS	2	EPA 625	10 ug/L
PCB AROCLOR 1248	BDL	ug/L	ND	LBS	BDL	ug/L	ND	LBS	2	EPA 625	10 ug/L
PCB AROCLOR 1254	BDL	ug/L	ND	LBS	BDL	ug/L	ND	LBS	2	EPA 625	10 ug/L
PCB AROCLOR 1260	BDL	ug/L	ND	LBS	BDL	ug/L	ND	LBS	2	EPA 625	50 ug/L
TOXAPHENE	BDL	ug/L	ND	LBS	BDL	ug/L	ND	LBS	2	EPA 625	10 ug/L

Comments: Some of these analytes may be duplicate to the priority pollutant reported on previos pages. For other pages synonyms were checked but not for this list.

Per conversation with Mr. Cameron Eisterhold, MDNR Operating Permit Section in regards to Mercury Sampling requirements for this permit application on Dec 22, 2015. Because Mercury is not in our permit and it has not been run as a part of "normal" metals scan at the contract laboratory previous metal values are not available. In order to efficiently complete the permit application and due to lack of variablity in samples over a 3 day period to obtain 3 mercury samples. Mr Eisterhold and I agreed that (1) one sample for mercury will be sufficient for this permit application. Robert Bryant, Whiteman Air Force Base Water Prorgram Manager.

FACILITY NAME WHITEMAN AFB	PERMIT NO. MO- 0029378	OUTFALL NO. 001 & 004 (2012)

PART E – TOXICITY TESTING DATA

17. TOXICITY TESTING DATA (continued)

	Most Recent	Second Most Recent	Third Most Recent
I. Type of dilution water. If salt water, specify "natural" or type of artificial sea salts or brine used.			
Fresh Water	receiving stream water	receiving stream water	
Salt Water			
J. Percentage of effluent used for all concentrations in the test series			
	0 - 100 %	0 - 100%	
K. Parameters measured during the test (State whether parameter meets test method specifications)			
pH	meet	meets	
Salinity			
Temperature	meets	meets	
Ammonia	meets	meets	
Dissolved Oxygen	meets	meets	
L. Test Results			
Acute:			
Percent Survival in 100% Effluent	100%	100%	
LC_{50}	100%	100%	
95% C.I.	100%	100%	
Control Percent Survival	100%	100%	
Other (Describe)			
Chronic:			
NOEC			
IC_{25}			
Control Percent Survival			
Other (Describe)			
M. Quality Control/ Quality Assurance			
Is reference toxicant data available?	yes	yes	
Was reference toxicant test within acceptable bounds?	yes	yes	
What date was reference toxicant test run (MM/DD/YYYY)?	4/18/2012	4/18/2012	
Other (Describe)			

Is the treatment works involved in a toxicity reduction evaluation? ☐ Yes ☑ No

If yes, describe:

If you have submitted biomonitoring test information, or information regarding the cause of toxicity, within the past four and one-half years, provide the dates the information was submitted to the permitting authority and a summary of the results.

Date Submitted (MM/DD/YYYY)

Summary of Results (See Instructions)

END OF PART E

REFER TO THE APPLICATION OVERVIEW TO DETERMINE WHICH OTHER PARTS OF FORM B2 YOU MUST COMPLETE.

MAKE ADDITIONAL COPIES OF THIS FORM FOR EACH OUTFALL

FACILITY NAME	PERMIT NO.	OUTFALL NO.
WHITEMAN AFB	MO- 0029378	001 & 004 (2012)

PART E – TOXICITY TESTING DATA

17. TOXICITY TESTING DATA

Refer to the APPLICATION OVERVIEW to determine whether Part E applies to the treatment works.

Publicly owned treatment works, or POTWs, meeting one or more of the following criteria must provide the results of whole effluent toxicity tests for acute or chronic toxicity for each of the facility's discharge points.

A. POTWs with a design flow rate greater than or equal to 1 million gallons per day
B. POTWs with a pretreatment program (or those that are required to have one under 40 CFR Part 403)
C. POTWs required by the permitting authority to submit data for these parameters

- At a minimum, these results must include quarterly testing for a 12-month period within the past one year using multiple species (minimum of two species), or the results from four tests performed at least annually in the four and one-half years prior to the application, provided the results show no appreciable toxicity, and testing for acute or chronic toxicity, depending on the range of receiving water dilution. Do not include information about combined sewer overflows in this section. All information reported must be based on data collected through analysis conducted using 40 CFR Part 136 methods. In addition, this data must comply with QA/QC requirements of 40 CFR Part 136 and other appropriate QA/QC requirements for standard methods for analytes not addressed by 40 CFR Part 136.
- If EPA methods were not used, report the reason for using alternative methods. If test summaries are available that contain all of the information requested below, they may be submitted in place of Part E. If no biomonitoring data is required, do not complete Part E. Refer to the application overview for directions on which other sections of the form to complete.

Indicate the number of whole effluent toxicity tests conducted in the past four and one-half years: 4 chronic _____ acute

Complete the following chart **for the last three whole effluent toxicity tests.** Allow one column per test. Copy this page if more than three tests are being reported.

	Most Recent	2ND Most Recent	3RD Most Recent
A. Test Information			
Test Method Number	EPA METHOD 2000	EPA METHOD 2002	
Final Report Number			
Outfall Number	001	001	
Dates Sample Collected	4/17/2012	4/17/2012	
Date Test Started	4/18/2012	04/18/2012	
Duration	4/20/2012	4/20/2012	
B. Toxicity Test Methods Followed			
Manual Title	methods for measuring the	acute toxicity of effluents an	recieving waters to fresh-
Edition Number and Year of Publication	water and marine organisms	USEPA 2002	
Page Number(s)	unknown		
C. Sample collection method(s) used. For multiple grab samples, indicate the number of grab samples used			
24-Hour Composite	x	x	
Grab			
D. Indicate where the sample was taken in relation to disinfection (Check all that apply for each)			
Before Disinfection	☐	☐	☐
After Disinfection	☐	☐	☐
After Dechlorination	☐	☐	☐
E. Describe the point in the treatment process at which the sample was collected			
Sample Was Collected:	at effluent structure	at effluent structure	
F. Indicate whether the test was intended to assess chronic toxicity, acute toxicity, or both			
Chronic Toxicity	☐	☐	☐
Acute Toxicity	☐ acute	☐ acute	☐
G. Provide the type of test performed			
Static	☐ static	☐ static	☐
Static-renewal	☐	☐	☐
Flow-through	☐	☐	☐
H. Source of dilution water. If laboratory water, specify type; if receiving water, specify source			
Laboratory Water	☐	☐	☐
Receiving Water	☐ receiving water	☐ receiving water	☐

MAKE ADDITIONAL COPIES OF THIS FORM FOR EACH OUTFALL

FACILITY NAME	PERMIT NO.	OUTFALL NO.
WHITEMAN AFB	MO- 0029378	001 & 004 (2013)

PART E – TOXICITY TESTING DATA

17. TOXICITY TESTING DATA

Refer to the APPLICATION OVERVIEW to determine whether Part E applies to the treatment works.

Publicly owned treatment works, or POTWs, meeting one or more of the following criteria must provide the results of whole effluent toxicity tests for acute or chronic toxicity for each of the facility's discharge points.

A. POTWs with a design flow rate greater than or equal to 1 million gallons per day

B. POTWs with a pretreatment program (or those that are required to have one under 40 CFR Part 403)

C. POTWs required by the permitting authority to submit data for these parameters

- At a minimum, these results must include quarterly testing for a 12-month period within the past one year using multiple species (minimum of two species), or the results from four tests performed at least annually in the four and one-half years prior to the application, provided the results show no appreciable toxicity, and testing for acute or chronic toxicity, depending on the range of receiving water dilution. Do not include information about combined sewer overflows in this section. All information reported must be based on data collected through analysis conducted using 40 CFR Part 136 methods. In addition, this data must comply with QA/QC requirements of 40 CFR Part 136 and other appropriate QA/QC requirements for standard methods for analytes not addressed by 40 CFR Part 136.
- If EPA methods were not used, report the reason for using alternative methods. If test summaries are available that contain all of the information requested below, they may be submitted in place of Part E. If no biomonitoring data is required, do not complete Part E. Refer to the application overview for directions on which other sections of the form to complete.

Indicate the number of whole effluent toxicity tests conducted in the past four and one-half years: 4 chronic _____ acute

Complete the following chart **for the last three whole effluent toxicity tests.** Allow one column per test. Copy this page if more than three tests are being reported.

	Most Recent	2ND Most Recent	3RD Most Recent
A. Test Information			
Test Method Number	EPA METHOD 2000	EPA METHOD 2002	
Final Report Number			
Outfall Number	001	001	
Dates Sample Collected	4/16/2013	4/16/2013	
Date Test Started	4/17/2013	4/17/2013	
Duration	4/19/2013	4/19/2013	
B. Toxicity Test Methods Followed			
Manual Title	methods for measuring the	acute toxicity of effluents an	recieving waters to fresh-
Edition Number and Year of Publication	water and marine organisms	USEPA 2002	
Page Number(s)	unknown		
C. Sample collection method(s) used. For multiple grab samples, indicate the number of grab samples used			
24-Hour Composite	x	x	
Grab			
D. Indicate where the sample was taken in relation to disinfection (Check all that apply for each)			
Before Disinfection	☐	☐	☐
After Disinfection	☐ post	☐ post	☐
After Dechlorination	☐	☐	☐
E. Describe the point in the treatment process at which the sample was collected			
Sample Was Collected:	at effluent structure	at effluent structure	
F. Indicate whether the test was intended to assess chronic toxicity, acute toxicity, or both			
Chronic Toxicity	☐	☐	☐
Acute Toxicity	☐ acute	☐ acute	☐
G. Provide the type of test performed			
Static	☐ static	☐ static	☐
Static-renewal	☐	☐	☐
Flow-through	☐	☐	☐
H. Source of dilution water. If laboratory water, specify type; if receiving water, specify source			
Laboratory Water	☐	☐	☐
Receiving Water	☐ receiving water	☐ receiving water	☐

FACILITY NAME WHITEMAN AFB	PERMIT NO. MO- 0029378	OUTFALL NO. 001 & 004 (2013)

PART E – TOXICITY TESTING DATA

17. TOXICITY TESTING DATA (continued)

	Most Recent	Second Most Recent	Third Most Recent
I. Type of dilution water. If salt water, specify "natural" or type of artificial sea salts or brine used.			
Fresh Water	receiving stream water	receiving stream water	
Salt Water			
J. Percentage of effluent used for all concentrations in the test series			
	0 - 100 %	0 - 100%	
K. Parameters measured during the test (State whether parameter meets test method specifications)			
pH	meet	meets	
Salinity	na	na	
Temperature	meets	meets	
Ammonia	meets	meets	
Dissolved Oxygen	meets	meets	
L. Test Results			
Acute:			
Percent Survival in 100% Effluent	100%	100%	
LC_{50}	100%	100%	
95% C.I.	100%	100%	
Control Percent Survival	100%	100%	
Other (Describe)			
Chronic:			
NOEC			
IC_{25}			
Control Percent Survival			
Other (Describe)			
M. Quality Control/ Quality Assurance			
Is reference toxicant data available?	yes	yes	
Was reference toxicant test within acceptable bounds?	yes	yes	
What date was reference toxicant test run (MM/DD/YYYY)?	04/16/2013	04/16/2013	
Other (Describe)			

Is the treatment works involved in a toxicity reduction evaluation? ☐ Yes ☑ No

If yes, describe:

If you have submitted biomonitoring test information, or information regarding the cause of toxicity, within the past four and one-half years, provide the dates the information was submitted to the permitting authority and a summary of the results.

Date Submitted (MM/DD/YYYY)

Summary of Results (See Instructions)

END OF PART E

REFER TO THE APPLICATION OVERVIEW TO DETERMINE WHICH OTHER PARTS OF FORM B2 YOU MUST COMPLETE.

MAKE ADDITIONAL COPIES OF THIS FORM FOR EACH OUTFALL

FACILITY NAME	PERMIT NO.	OUTFALL NO.
WHITEMAN AFB	MO- 0029378	001 & 004 (2014)

PART E – TOXICITY TESTING DATA

17. TOXICITY TESTING DATA

Refer to the APPLICATION OVERVIEW to determine whether Part E applies to the treatment works.

Publicly owned treatment works, or POTWs, meeting one or more of the following criteria must provide the results of whole effluent toxicity tests for acute or chronic toxicity for each of the facility's discharge points.

A. POTWs with a design flow rate greater than or equal to 1 million gallons per day

B. POTWs with a pretreatment program (or those that are required to have one under 40 CFR Part 403)

C. POTWs required by the permitting authority to submit data for these parameters

- At a minimum, these results must include quarterly testing for a 12-month period within the past one year using multiple species (minimum of two species), or the results from four tests performed at least annually in the four and one-half years prior to the application, provided the results show no appreciable toxicity, and testing for acute or chronic toxicity, depending on the range of receiving water dilution. Do not include information about combined sewer overflows in this section. All information reported must be based on data collected through analysis conducted using 40 CFR Part 136 methods. In addition, this data must comply with QA/QC requirements of 40 CFR Part 136 and other appropriate QA/QC requirements for standard methods for analytes not addressed by 40 CFR Part 136.
- If EPA methods were not used, report the reason for using alternative methods. If test summaries are available that contain all of the information requested below, they may be submitted in place of Part E. If no biomonitoring data is required, do not complete Part E. Refer to the application overview for directions on which other sections of the form to complete.

Indicate the number of whole effluent toxicity tests conducted in the past four and one-half years: 4 chronic _____ acute

Complete the following chart **for the last three whole effluent toxicity tests.** Allow one column per test. Copy this page if more than three tests are being reported.

	Most Recent	2ND Most Recent	3RD Most Recent
A. Test Information			
Test Method Number	EPA METHOD 2000	EPA METHOD 2002	
Final Report Number			
Outfall Number	001	001	
Dates Sample Collected	4/22/2014	4/22/2014	
Date Test Started	4/23/2014	4/23/2014	
Duration	4/25/2014	4/25/2014	
B. Toxicity Test Methods Followed			
Manual Title	methods for measuring the	acute toxicity of effluents an	recieving waters to fresh-
Edition Number and Year of Publication	water and marine organisms	USEPA 2002	
Page Number(s)	unknown		
C. Sample collection method(s) used. For multiple grab samples, indicate the number of grab samples used			
24-Hour Composite	x	x	
Grab			
D. Indicate where the sample was taken in relation to disinfection (Check all that apply for each)			
Before Disinfection	☐	☐	☐
After Disinfection	☐ POST	☐ POST	☐
After Dechlorination	☐	☐	☐
E. Describe the point in the treatment process at which the sample was collected			
Sample Was Collected:	at effluent structure	at effluent structure	
F. Indicate whether the test was intended to assess chronic toxicity, acute toxicity, or both			
Chronic Toxicity	☐	☐	☐
Acute Toxicity	☐ acute	☐ acute	☐
G. Provide the type of test performed			
Static	☐ static	☐ static	☐
Static-renewal	☐	☐	☐
Flow-through	☐	☐	☐
H. Source of dilution water. If laboratory water, specify type; if receiving water, specify source			
Laboratory Water	☐	☐	☐
Receiving Water	☐ receiving water	☐ receiving water	☐

FACILITY NAME WHITEMAN AFB	PERMIT NO. MO- 0029378	OUTFALL NO. 001 & 004 (2014)

PART E – TOXICITY TESTING DATA

17. TOXICITY TESTING DATA (continued)

	Most Recent	Second Most Recent	Third Most Recent
I. Type of dilution water. If salt water, specify "natural" or type of artificial sea salts or brine used.			
Fresh Water	receiving stream water	receiving stream water	
Salt Water			
J. Percentage of effluent used for all concentrations in the test series			
	0 - 100 %	0 - 100%	
K. Parameters measured during the test (State whether parameter meets test method specifications)			
pH	meet	meets	
Salinity			
Temperature	meets	meets	
Ammonia	meets	meets	
Dissolved Oxygen	meets	meets	
L. Test Results			
Acute:			
Percent Survival in 100% Effluent	100%	100%	
LC_{50}	100%	100%	
95% C.I.	100%	100%	
Control Percent Survival	100%	100%	
Other (Describe)			
Chronic:			
NOEC			
IC_{25}			
Control Percent Survival			
Other (Describe)			
M. Quality Control/ Quality Assurance			
Is reference toxicant data available?	yes	yes	
Was reference toxicant test within acceptable bounds?	yes	yes	
What date was reference toxicant test run (MM/DD/YYYY)?	3/26/2014	3/26/2014	
Other (Describe)			

Is the treatment works involved in a toxicity reduction evaluation? ☐ Yes ☑ No

If yes, describe:

If you have submitted biomonitoring test information, or information regarding the cause of toxicity, within the past four and one-half years, provide the dates the information was submitted to the permitting authority and a summary of the results.

Date Submitted (MM/DD/YYYY)

Summary of Results (See Instructions)

END OF PART E

REFER TO THE APPLICATION OVERVIEW TO DETERMINE WHICH OTHER PARTS OF FORM B2 YOU MUST COMPLETE.

MAKE ADDITIONAL COPIES OF THIS FORM FOR EACH OUTFALL

FACILITY NAME	PERMIT NO.	OUTFALL NO.
WHITEMAN AFB	MO- 0029318	001 & 004 (2015)

PART E – TOXICITY TESTING DATA

17. TOXICITY TESTING DATA

Refer to the APPLICATION OVERVIEW to determine whether Part E applies to the treatment works.

Publicly owned treatment works, or POTWs, meeting one or more of the following criteria must provide the results of whole effluent toxicity tests for acute or chronic toxicity for each of the facility's discharge points.

A. POTWs with a design flow rate greater than or equal to 1 million gallons per day
B. POTWs with a pretreatment program (or those that are required to have one under 40 CFR Part 403)
C. POTWs required by the permitting authority to submit data for these parameters

- At a minimum, these results must include quarterly testing for a 12-month period within the past one year using multiple species (minimum of two species), or the results from four tests performed at least annually in the four and one-half years prior to the application, provided the results show no appreciable toxicity, and testing for acute or chronic toxicity, depending on the range of receiving water dilution. Do not include information about combined sewer overflows in this section. All information reported must be based on data collected through analysis conducted using 40 CFR Part 136 methods. In addition, this data must comply with QA/QC requirements of 40 CFR Part 136 and other appropriate QA/QC requirements for standard methods for analytes not addressed by 40 CFR Part 136.
- If EPA methods were not used, report the reason for using alternative methods. If test summaries are available that contain all of the information requested below, they may be submitted in place of Part E. If no biomonitoring data is required, do not complete Part E. Refer to the application overview for directions on which other sections of the form to complete.

Indicate the number of whole effluent toxicity tests conducted in the past four and one-half years: 4 chronic _____ acute

Complete the following chart **for the last three whole effluent toxicity tests.** Allow one column per test. Copy this page if more than three tests are being reported.

	Most Recent	2ND Most Recent	3RD Most Recent
A. Test Information			
Test Method Number	EPA METHOD 2000	EPA METHOD 2002	
Final Report Number			
Outfall Number	001	001	
Dates Sample Collected	4/21/2015	4/21/2015	
Date Test Started	4/22/2015	4/22/2015	
Duration	4/24/2015	4/24/2015	
B. Toxicity Test Methods Followed			
Manual Title	methods for measuring the	acute toxicity of effluents an	recieving waters to fresh-
Edition Number and Year of Publication	water and marine organisms	USEPA 2002	
Page Number(s)	unknown		
C. Sample collection method(s) used. For multiple grab samples, indicate the number of grab samples used			
24-Hour Composite	x	x	
Grab			
D. Indicate where the sample was taken in relation to disinfection (Check all that apply for each)			
Before Disinfection	☐	☐	☐
After Disinfection	☐	☐	☐
After Dechlorination	☐	☐	☐
E. Describe the point in the treatment process at which the sample was collected			
Sample Was Collected:	at effluent structure	at effluent structure	
F. Indicate whether the test was intended to assess chronic toxicity, acute toxicity, or both			
Chronic Toxicity	☐	☐	☐
Acute Toxicity	☐ acute	☐ acute	☐
G. Provide the type of test performed			
Static	☐ static	☐ static	☐
Static-renewal	☐	☐	☐
Flow-through	☐	☐	☐
H. Source of dilution water. If laboratory water, specify type; if receiving water, specify source			
Laboratory Water	☐	☐	☐
Receiving Water	☐ receiving water	☐ receiving water	☐

FACILITY NAME WHITEMAN AFB	PERMIT NO. MO- 0029318	OUTFALL NO. 001 & 004 (2015)

PART E – TOXICITY TESTING DATA

17. TOXICITY TESTING DATA (continued)

	Most Recent	Second Most Recent	Third Most Recent
I. Type of dilution water. If salt water, specify "natural" or type of artificial sea salts or brine used.			
Fresh Water	receiving stream water	receiving stream water	
Salt Water			
J. Percentage of effluent used for all concentrations in the test series			
	0 - 100 %	0 - 100%	
K. Parameters measured during the test (State whether parameter meets test method specifications)			
pH	meet	meets	
Salinity			
Temperature	meets	meets	
Ammonia	meets	meets	
Dissolved Oxygen	meets	meets	
L. Test Results			
Acute:			
Percent Survival in 100% Effluent	100%	100%	
LC_{50}	100%	100%	
95% C.I.	100%	100%	
Control Percent Survival	100%	100%	
Other (Describe)			
Chronic:			
NOEC			
IC_{25}			
Control Percent Survival			
Other (Describe)			
M. Quality Control/ Quality Assurance			
Is reference toxicant data available?	yes	yes	
Was reference toxicant test within acceptable bounds?	yes	yes	
What date was reference toxicant test run (MM/DD/YYYY)?	4/14/2015	4/14/2015	
Other (Describe)			

Is the treatment works involved in a toxicity reduction evaluation? ☐ Yes ☑ No

If yes, describe:

If you have submitted biomonitoring test information, or information regarding the cause of toxicity, within the past four and one-half years, provide the dates the information was submitted to the permitting authority and a summary of the results.

Date Submitted (MM/DD/YYYY)

Summary of Results (See Instructions)

END OF PART E

REFER TO THE APPLICATION OVERVIEW TO DETERMINE WHICH OTHER PARTS OF FORM B2 YOU MUST COMPLETE.

MAKE ADDITIONAL COPIES OF THIS FORM FOR EACH OUTFALL

FACILITY NAME	PERMIT NO.	OUTFALL NO.
WHITEMAN AFB	MO- 0029378	001 & 004

PART F – INDUSTRIAL USER DISCHARGES AND RCRA/CERCLA WASTES

Refer to the APPLICATION OVERVIEW to determine whether Part F applies to the treatment works.

18. GENERAL INFORMATION

18.1 Does the treatment works have, or is it subject to, an approved pretreatment program?

☐ Yes ☑ No

18.2 Number of Significant Industrial Users (SIUs) and Categorical Industrial Users (CIUs). Provide the number of each of the following types of industrial users that discharge to the treatment works:

Number of non-categorical SIUs ____

Number of CIUs ____

19. INDUSTRIES CONTRIBUTING MORE THAN 5 PERCENT OF THE ACTUAL FLOW TO THE FACILITY OR OTHER SIGNIFICANT INDUSTRIAL USERS INFORMATION

Supply the following information for each SIU. If more than one SIU discharges to the treatment works, provide the information requested for each. Submit additional pages as necessary.

NAME			
MAILING ADDRESS	CITY	STATE	ZIP CODE

19.1 Describe all of the industrial processes that affect or contribute to the SIU's discharge

19.2 Describe all of the principle processes and raw materials that affect or contribute to the SIU's discharge.

Principal Product(s):

Raw Material(s):

19.3 Flow Rate

a. PROCESS WASTEWATER FLOW RATE. Indicate the average daily volume of process wastewater discharged into the collection system in gallons per day, or gpd, and whether the discharge is continuous or intermittent.

gpd ☐ Continuous ☐ Intermittent

b. NON-PROCESS WASTEWATER FLOW RATE. Indicate the average daily volume of non-process wastewater discharged into the collection system in gallons per day, or gpd, and whether the discharge is continuous or intermittent.

gpd ☐ Continuous ☐ Intermittent

19.4 Pretreatment Standards. Indicate whether the SIU is subject to the following:

a. Local Limits ☐ Yes ☐ No

b. Categorical Pretreatment Standards ☐ Yes ☐ No

If subject to categorical pretreatment standards, which category and subcategory?

19.5 Problems at the treatment works attributed to waste discharged by the SIU. Has the SIU caused or contributed to any problems (e.g., upsets, interference) at the treatment works in the past three years?

☐ Yes ☐ No

If Yes, describe each episode

MAKE ADDITIONAL COPIES OF THIS FORM FOR EACH OUTFALL

FACILITY NAME	PERMIT NO.	OUTFALL NO.
WHITEMAN AFB	MO- 0029378	001 & 004

PART F – INDUSTRIAL USER DISCHARGES AND RCRA/CERCLA WASTES

20. RCRA HAZARDOUS WASTE RECEIVED BY TRUCK, RAIL, OR DEDICATED PIPELINE

20.1 Does the treatment works receive or has it in the past three years received RCRA hazardous waste by truck, rail or dedicated pipe? ☐ Yes ☑ No

20.2 Method by which RCRA waste is received. (Check all that apply)
☐ Truck ☐ Rail ☐ Dedicated Pipe

20.3 Waste Description

EPA Hazardous Waste Number	Amount (volume or mass)	Units

21. CERCLA (SUPERFUND) WASTEWATER, RCRA REMEDIATION/CORRECTIVE ACTION WASTEWATER, AND OTHER REMEDIAL ACTIVITY WASTEWATER

21.1 Does the treatment works currently (or has it been notified that it will) receive waste from remedial activities?
☐ Yes ☐ No
Provide a list of sites and the requested information for each current and future site.

21.2 Waste Origin. Describe the site and type of facility at which the CERCLA/RCRA/or other remedial waste originates (or is expected to originate in the next five years).

21.3 List the hazardous constituents that are received (or are expected to be received). Included data on volume and concentration, if known. (Attach additional sheets if necessary)

21.4 Waste Treatment

a. Is this waste treated (or will it be treated) prior to entering the treatment works?
☐ Yes ☐ No

If Yes, describe the treatment (provide information about the removal efficiency):

b. Is the discharge (or will the discharge be) continuous or intermittent?
☐ Continuous ☐ Intermittent

If intermittent, describe the discharge schedule:

END OF PART F

REFER TO THE APPLICATION OVERVIEW TO DETERMINE WHICH OTHER PARTS OF FORM B2 YOU MUST COMPLETE.

MAKE ADDITIONAL COPIES OF THIS FORM FOR EACH OUTFALL

FACILITY NAME	PERMIT NO.	OUTFALL NO.
WHITEMAN AIR FORCE BASE	MO- 0029378	001 & 004

PART G – COMBINED SEWER SYSTEMS

Refer to the APPLICATION OVERVIEW to determine whether Part G applies to the treatment works. NA

22. GENERAL INFORMATION

22.1 System Map. Provide a map indicating the following: (May be included with basic application information.)

A. All CSO Discharges.
B. Sensitive Use Areas Potentially Affected by CSOs. (e.g., beaches, drinking water supplies, shellfish beds, sensitive aquatic ecosystems and Outstanding Natural Resource Waters.)
C. Waters that Support Threatened and Endangered Species Potentially Affected by CSOs.

22.2 System Diagram. Provide a diagram, either in the map provided above or on a separate drawing, of the Combined Sewer Collection System that includes the following information:

A. Locations of Major Sewer Trunk Lines, Both Combined and Separate Sanitary.
B. Locations of Points where Separate Sanitary Sewers Feed into the Combined Sewer System.
C. Locations of In-Line or Off-Line Storage Structures.
D. Locations of Flow-Regulating Devices.
E. Locations of Pump Stations.

22.3 Percent of collection system that is combined sewer not applicable - separate sewer system

22.4 Population served by combined sewer collection system

22.5 Name of any satellite community with combined sewer collection system

23. CSO OUTFALLS. COMPLETE THE FOLLOWING ONCE FOR EACH CSO DISCHARGE POINT

23.1 Description of Outfall

a. Outfall Number
b. Location
c. Distance from Shore (if applicable) _____ ft
d. Depth Below Surface (if applicable) _____ ft
e. Which of the following were monitored during the last year for this CSO?
☐ Rainfall ☐ CSO Pollutant Concentrations ☐ CSO
☐ CSO Flow Volume ☐ Receiving Water Quality
f. How many storm events were monitored last year?

23.2 CSO Events

a. Give the Number of CSO Events in the Last Year Events ☐ Actual ☐ Approximate
b. Give the Average Duration Per CSO Event
Hours ☐ Actual ☐ Approximate
c. Give the Average Volume Per CSO Event
Million Gallons ☐Actual ☐ Approximate
d. Give the minimum rainfall that caused a CSO event in the last year _____ inches of rainfall

23.3 Description of Receiving Waters

a. Name of Receiving Water
b. Name of Watershed/River/Stream System
c. U.S. Soil Conservation Service 14-Digit Watershed Code (If Known)
d. Name of State Management/River Basin
e. U.S. Geological Survey 8- Digit Hydrologic Cataloging Unit Code (If Known)

23.4 CSO Operations

Describe any known water quality impacts on the receiving water caused by this CSO (e.g., permanent or intermittent beach closings, permanent or intermittent shellfish bed closings, fish kills, fish advisories, other recreational loss, or violation of any applicable state water quality standard.)

END OF PART G

REFER TO THE APPLICATION OVERVIEW TO DETERMINE WHICH OTHER PARTS OF FORM B2 YOU MUST COMPLETE.

MISSOURI DEPARTMENT OF NATURAL RESOURCES
WATER PROTECTION PROGRAM

FORM I – PERMIT APPLICATION FOR OPERATION OF WASTEWATER IRRIGATION SYSTEMS

FOR AGENCY USE ONLY
PERMIT NUMBER MO -
DATE RECEIVED

INSTRUCTIONS: The following forms must be submitted with Form I: FORM B or B2 for domestic wastewater.
FORM A for industrial wastewater.

1. FACILITY INFORMATION

1.1 Facility Name
WHITEMAN AIR FORCE BASE

1.2 Permit Number
MO- 0029378

1.3 Type of wastewater to be irrigated: ☑ Domestic ☑ Municipal ☐ State/National Park ☐ Seasonal business
☐ Municipal with Pretreatment Program or Significant Industrial Users ☐ Other (explain) _____

SIC Codes (list all that apply, in order of importance) 97114952

1.4 Months when the business or enterprise will operate or generate wastewater:
☑ 12 months per year ☐ Part of year (list Months): ___

1.5 This system is designed for:
☐ No-discharge ☐ Partial irrigation when feasible and discharge rest of time.
☑ Irrigation during recreation season (April – October) and discharge during November – March.
☐ Other (explain) ___

1.6 List the Facility outfalls which will be applicable to the irrigation system.
Outfall Numbers: 004

2. STORAGE BASINS

2.1 Number of storage basins: 3
Type of basin: ☐ Steel ☐ Concrete ☐ Fiberglass ☑ Earthen
☐ Earthen with membrane liner

3. LAND APPLICATION SYSTEM

3.1 Number of irrigation sites 1 Total Acres ~ 60
Location: ___ ¼, SE ¼, NW ¼, Sec 32 T 46N R 24w JOHNSON County ~60 Acres
Location: ___ ¼, ___ ¼, ___ ¼, Sec ___ T ___ R ___ _____ County _____ Acres
Attach pages as needed.

3.2 Attach a site map showing topography, storage basins, irrigation sites, property boundary, streams, wells, roads, dwellings, and other pertinent features.

3.3 Type of vegetation: ☐ Grass hay ☐ Pasture ☐ Timber ☐ Row crops ☑ Other (describe) see notes

3.4 Wastewater flow (dry weather) gallons/day:
Average annual: 41400 Seasonal 70700 Off-season 0
Months of seasonal flow: 7

3.3 SITE MAP

DEPARTMENT OF THE AIR FORCE
AIR FORCE GLOBAL STRIKE COMMAND
WHITEMAN AFB - MISSOURI
Wastewater Treatment Plant Area
FOR OFFICIAL USE ONLY
DATE: 22-JAN-2016
SCALE: 1:15,000
1 inch = 1,250 feet
0 312.5 625 1,250 Feet
Legend
LOCATION MAP
WHITEMAN AFB
VETERANS PARK
IKE SKELTON PARK
KNOB NOSTER STATE PARK
UNITED STATES OF AMERICA
WHITEMAN AIRFORCE BASE
BARLOW, CHARLES R. JR
BARLOW, CHARLES R & JOHNNIE M
DILLINGHAM, MARY ANN
DILLINGHAM, JOHN R & AMY SUE
DILLINGHAM, RONALD & RUTH
MENNEMEIER, JEROME A & CHARLOT
SMARR & BRIAN C ELLIS, ADRIENN
HARTFORD, BARBARA JO & BILLY V
DILLINGHAM, LARRY R & LOIS I
BAKER, TRUDY A
SHRMAN, JEFFREY K & LYNDA M
EPPERSON, WILLIAM A & JENNIFER
RICE, LYLE M
HOUK, JAMES H & ANN B
GREER TRUST & WILLIAM H GREER
BEARD, ERVIN C & AGNES F
USA WHITEMAN AFB
Driving Range
HOLE 1
HOLE 2
HOLE 3
HOLE 4
HOLE 5
HOLE 6
HOLE 9
HOLE 10
HOLE 11
HOLE 12
HOLE 14
HOLE 15
HOLE 16
HOLE 17
HOLE 18
J
DD
23

3. LAND APPLICATION SYSTEM (continued)

3.5 Land Application rate per acre (design flow including 1 in 10 year stormwater flows):

Design: ____ inches/year ____ inches/hour ____ inches/day 1.75 inches/week

Actual: ____ inches/year ____ inches/hour ____ inches/day 1.2 inches/week

Total Irrigation per year (gallons): 218.6mg Design 15.19mg Actual

Actual months used for Irrigation (check all that apply):

☐ Jan ☐ Feb ☐ Mar ☑ Apr ☑ May ☑ Jun ☑ Jul ☑ Aug ☑ Sep ☑ Oct ☑ Nov ☐ Dec

3.6 Land Application Rate is based on:

☐ Nutrient Management Plan (N&P)

☑ Hydraulic Loading

☐ Other (describe) ____

3.7 Equipment type: ☑ Sprinklers ☐ Gated pipe ☐ Center pivot ☐ Traveling gun ☐ Other (describe) ____

Equipment Flow Capacity: ~48000 Gallons per hour notes Total hours of operation per year

3.8 **Public Use Areas**. Public access shall not be allowed to public use area irrigation sites when application is occurring. Method of Public Access Restriction:

☐ Site is Fenced ☑ Wastewater disinfection prior to irrigation ☐ Site is not for public use

☑ Other (describe): NA - wastewater is disinfected and used for irrigation at a Golf Course

3.9 Separation distance (in feet) from the outside edge of the wetted irrigation area to nearby down gradient features:

NA Permanent flowing stream NA Losing Stream 40 Intermittent (wet weather) stream 2 Lake or pond

200 Property boundary NA Dwellings NA Water supply well ~30 Other (describe) putting green to club house

3.10 The facility must develop and retain an Operation and Maintenance (O&M) Plan for the irrigation system.

Date of O&M Plan: 11/01/2010

4. CERTIFICATION

I certify under penalty of law that I have personally examined and am familiar with the information submitted in this application and all attachments and that based on my inquiry of those individuals immediately responsible for obtaining this information, I believe that the information is true, accurate and complete. I am aware that there are significant penalties for submitting false information including the possibility of fine or imprisonment.

OWNER OR AUTHORIZED REPRESENTATIVE	OFFICIAL TITLE
GLENN GOLSON, glenn.golson@us.af.mil	ENVIRONMENTAL ELEMENT CHIEF
EMAIL ADDRESS	TELEPHONE NUMBER WITH AREA CODE
glenn.golson@us.af.mil	(660) 687-6347
SIGNATURE	DATE SIGNED
Glenn S. Golson	16 FEB 16

780-1686 (08-14)

Additional Information for Wastewater permits application:

Form B2 - Permit Renewal Application for WWTP

Request for an additional Outfall 001B

This outfall would be prior to the tertiary treatment in the finishing lagoon and also prior to disinfection This outfall had been authorized in previous permits, but will only be used in the future as an emergency discharge location. Effluent discharged through the outfall does not bypass any secondary treatment. The only treatment that will be bypassed would be the tertiary treatment (disinfection) which is required only for the land application of effluent to the golf course. Currently Whiteman is not required to disinfect prior to discharge to the receiving stream. This additional discharge location already has a Parshall Flume and all daily monitoring will occur at this point. The intent of this additional discharge location is to provide for a discharge point when maintenance is occurring on the tertiary treatment system and would be noted on the DMRs.

Form 1 - Land Application of effluent

1.3 - Type of wastewater to be irrigated

SIC codes for plant – 9711 national security and 4952 wastewater treatment

1.4 - Months in operation

12 at WWTP general usage of irrigation system 7 months – from Apr through October – (although in 2015 did irrigate a few days in November)

2.1 - Number of storage basins

2 Lagoons are used as tertiary treatment at WWTP prior to pumping to golf course – 1 storage pond on golf course used to hold treated effluent prior to irrigation.

3.1 - Number of Irrigation sites

Actual acreage of irrigation is approximately 30 acres with some incidental watering of the roughs to total of 60 acres approximate.

3.3 - Type of Vegetation on Golf Course

Perennial / rye / bent grass

3.4 - Wastewater flow to golf course: (annual)

2015* – 28.857 mg
2014 – 5.209 mg
2013 – 11.304 mg
2012 – 9356** gallons
Average – 15.123 mg

210 days = 0.407 mg /day / 60 = 6800 gall / acre / 27154 = 0.25 inches per day = 1.75 inches / wk. * 30 = 52.5 inches / year

Normal (average) year water requirement - 1.25 inches per week

Average year water requirement 1.25 inches per week = 33950 gallons/acre inch/week * 60 acres = 2.04 million gallons / week * 30 weeks = 61.0 million gallons / year

210 days = 0.290 mg /day / 60 = 4850 gall / acre / 27154 = 0.18 inches per day = 1.25 inches / wk. * 30 = 37.5 inches / year

Design of the system

What I think the 2012 specs should have been for the 42 mg / yr.

42,000,000 / 210 = 0.2 mg/day / 300 acres = 700 gall / acre = 0.025 inches / day * 7 = .17 in week * 30 = 5.2

Instead of using 300 acres use actual acres irrigated and the values are in line with expected

42,000,000 / 210 days = 0.20 mg/day / 60 acres = 3333 gall / acre / 27150 = .123 in /acre/day = 0.85 inches/ acre / week * 30 = 25.75 inches/ acre / yr. – that's assuming that 33% of irrigation flow is obtained from the well – but the well has not been in use since the flow from the WWTP has started

So the actual number to go by design should be

65,700,000 / yr. / 210 days = .321 mg / day / 60 acres = 5360 gallons / acre / 27154 = .197 inches / day / acre * 7 = 1.38 inches / week/ acre * 30 = 41.4 inches / yr. / acre

Actual see total flows for 3.4.
Inches / week

3.7 - Equipment capacity

Total hours of operation:
2 pumps: pump 1 – 2642 hrs. and pump 2 – 2680 for a total of 5322 pump hours of operation in 2015.

*2015 flows are the most accurate because of turbulence in the discharge line to the golf course so the WWTP added a valve vault approximately 20' down from existing box and relocated the flow meter away from any turbulence that was being caused by valves and fittings in the piping.

**Not used in average calculation

Seasonal flow calculated using number of day 214 (Apr – Oct) average flow / 214.
Annual flow = average divided by 365
Off-season – 0 not normally sending flow to golf course Nov – Mar

3.5 - Land Application Rate

Actual flow – treatment plant records show 28.857 mg and golf course pumping records show 15.186 mg for a difference of 27000 gallons over the course of 7 months. This difference can be accounted for due to evaporation in pond and other minor leaks in the system.

3.6 - Land Application Rate for Hydraulic Loading

Actual calculations appear in **BOLD**.

Calculated Application rates

15.186 mg/yr. average flow / 210 days = 0.07231 mg/ day / 60 acres = 1200 gallons / acre/day / 27154 = 0.04 inches /acre/day * 7 = 0.31 inches per week * 30 = 9.3 inches /acre/ year

28.857 mg/yr. (2015) / 210 days = 0.1374 mg/day / 60 acres = 2290 gallons/acre/day / 27154 = 0.08 inches /acre/day * 7 = 0.59 inches per week * 30 = 17.71 inches/acre/year of treated wastewater land applied in 2015.

Application rate – by permit

Design guidelines per 2012 revised permit which expired in Aug 2013 showed the following design specifications:

300 total acres – actually used to irrigation is ~60 acres

Irrigation volume – 42 million gallons (63% of total irrigation needs 100% irrigation need = 67.5 mg) – actual ~ 15.2 million gallons
In/acre/hr. – 0.0036 inches/hr.; 0.029 inches/acre/day; 0.2 inches/acre/ per week and 5.2 inches/acre/ per year

This used the 42 mg /yr. for all 300 acres but the actual acreage is closer to 60 and should permit the total irrigation need of 67.5 mg / year.

Dry year water requirement 1.75 inches per week = 47520 gallons/acre inch/week * 60 acres = 2.85 million gallons / week * 30 weeks = 85.536 million gallons / year