– City of –

CARL JUNCTION

MISSOURI

Standard Specifications for Public Improvements

September 1998 • Revised December 2004 • Revised January 2015

Cj

Missouri

CITY OF
CARL JUNCTION, MISSOURI

STANDARD SPECIFICATIONS
FOR
PUBLIC IMPROVEMENTS

September 1998
Revised December 2004
Revised January 2015

RECEIVED
MAR 13 2015

STATE OF MISSOURI
KURT E.
HIGGINS
NUMBER
E-30041
REGISTERED PROFESSIONAL ENGINEER
3-5-15

Prepared by
ALLGEIER, MARTIN & ASSOCIATES, INC.
Consulting Engineers
Joplin, Missouri

TABLE OF CONTENTS

		Page
DEFINITIONS		
PROPOSAL REQUIREMENTS AND CONDITIONS		3
AWARD AND EXECUTION OF CONTRACT		5
GENERAL PROVISIONS		6
INSURANCE REQUIREMENTS		13
DIVISION 100 - SANITARY SEWER SYSTEM		
101	MATERIALS	
101-1	Gravity Sewer Pipe	100-01
101-2	Pressure Sewer Pipe	100-02
101-3	Pressure Sewer Fittings	100-03
101-4	Precast Manholes and Manhole Drops	100-03
101-5	Pipe Bedding Material	100-06
101-6	Steel Casing Pipe	100-06
101-7	Pumping Station Materials and Equipment	100-06
102	INSTALLATION PROCEDURES	
102-1	Trenching, Bedding, Backfilling, & Compacting	100-10
102-2	Installation	100-12
102-3	Testing	100-14
102-4	Roadway Surface Replacement	100-17
102-5	Cleanup	100-17
102-6	Highway and Railroad Crossings	100-18
102-7	Pumping Station Chain Link Fences and Gates	100-18
DIVISION 200 - POTABLE WATER SYSTEM		
201	MATERIALS	
201-1	Water Distribution Lines	200-01
201-2	Water Service Lines & Appurtenances	200-02
201-3	Valves and Hydrants	200-02
201-4	Pipe Bedding Material	200-03
201-5	Steel Casing Pipe	200-04
201-6	Tracer Wire	200-04
202	INSTALLATION PROCEDURES	
202-1	Trenching, Bedding, Backfilling, & Compacting	200-04
202-2	Installation	200-05
202-3	Testing, Flushing, & Disinfecting	200-07
202-4	Roadway Surface Replacement	200-10
202-5	Clean Up	200-11
202-6	Highway and Railroad Crossings	200-11
202-7	Stream Crossings	200-11

DIVISION 300 - STORM SEWERS AND APPURTENANCES

301	GENERAL	
302	MATERIALS	
302-1	Plastic Pipe	300-02
302-2	Concrete Pipe	300-02
302-3	Corrugated Metal Pipe	300-02
302-4	Manholes, Junction Boxes, and Inlets	300-02
302-5	Concrete	300-02
302-6	Pipe Bedding	300-03
303	INSTALLATION PROCEDURES	
303-1	Trenching	300-04
303-2	Pipe Installation	300-04
303-3	Manhole, Junction Box, & Inlet	300-04
303-4	Backfilling and Compacting	300-05
303-5	Roadway Surface Replacement	300-05
303-6	Clean Up	300-06

DIVISION 400 - GRADING, SITE, AND SUBGRADE PREPARATION

401	CLEARING, GRUBBING, AND DEMOLITION	
401-1	Scope	400-01
401-2	Materials, Definitions, and Equipment	400-01
401-3	Construction Details - Limits of Work	400-01
401-4	Rock Excavation	400-02
401-5	Excavation	400-02
401-6	Fill and Grading	400-02
401-7	Tests	400-03
401-8	Subgrade Preparation	400-03

DIVISION 500 - STREETS AND ROADWAYS

501	MATERIALS	
501-1	Granular Stone Base	500-01
501-2	Concrete Surface	500-01
501-3	Asphaltic Concrete Surface	500-01
501-4	Crushed Stone Surface	500-02
502	PLACEMENT OF GRANULAR STONE BASE	
502-1	Base Course	500-04
502-2	Proportioning Concrete	500-04
502-3	Mixing Concrete	500-04
502-4	Concrete Placement	500-04
503	PLACEMENT OF CONCRETE SURFACING	
503-1	Prime Coat	500-11
503-2	Tack Coat	500-11
503-3	Surface and Bituminous Base Course	500-11
503-4	Compaction and Testing	500-12
504	PLACEMENT OF CONCRETE CURB AND GUTTER	
504-1	Formwork	500-14
504-2	Concrete Placement	504-14

504-3	Form Removal and Backfilling	500-14
504-4	Crack Control Joints	500-14

DIVISION 600 - SIDEWALKS AND DRIVES

601	SIDEWALKS	
601-1	Americans with Disabilities Act Accessibility Guidelines	601-01
601-2	Sidewalk Dimensions and Reinforcement	601-01
601-3	Subgrade	601-01
601-4	Base	601-01
601-5	Concrete	601-01
601-6	Finish	601-01
601-7	Control Joints	601-01
601-8	Detectable Warnings	601-01
602	DRIVEWAYS	
602-1	Definition	602-02
602-2	Limitations	602-02
602-3	Subgrade	602-02
602-4	Base	602-02
602-5	Materials	602-02
602-6	Slope	602-02
602-7	Expansion Joints	602-02
602-8	Pedestrian Access	602-02

DETAILS

Sanitary Sewer Details	
Sewer Line Trench & Bedding	A-1
Typical Precast Manhole	A-2 - A-3
Drop Manhole	A-4
Service Lateral	A-5
Stream Crossing	A-6
Outdoor Grease Trap	A-7
Outdoor Sediment Grease Trap	A-8
Sewer and Water Line Street Crossings	A-9
Lift Station Chain Link Fence With Ground Detail	A-10
12' Gate Assembly	A-11
Manhole Grading	A-12
Potable Water Details	
Water Line Trench & Bedding	B-1
Water and Sewer Line Crossing	B-2
Stream Crossing	B-3
Highway Crossing	B-4
Tapping Valve & Sleeve Installation	B-5
Fire Hydrant Installation	B-6
Water Meter Installation	B-7
Gate Valve Installation	B-8
Thrust Block	B-9
Service Tap	B-10
Double Set Meter & Service Line Crossing Roadway	B-11

Storm Sewer Details
Trench & Bedding C-1
Single Drop Inlet C-2
Type "B" Single Drop Inlet C-3
Type "T" Drop Inlet C-4

Street, Roadway, and Sidewalk Details
Standard Dimensions D-1
Typical Section D-2
Standard Curb and Gutter D-3
Mountable Curb and Gutter D-4
Concrete Approach D-5
Concrete Gutter Crossing D-6
Sidewalk D-7

APPROVAL LETTERS

Department of Natural Resources November 9, 1999

Department of Natural Resources January 25, 2005

CITY OF CARL JUNCTION
STANDARD SPECIFICATIONS
FOR
PUBLIC IMPROVEMENTS
ADOPTED AUGUST 17, 1999

DEFINITIONS

A-1. DEFINITION OF TERMS. Whenever the following terms or pronouns in plans, specifications, proposal, and bond, the intent and meaning shall be interpreted as follows:

City: The City of Carl Junction, Missouri, a municipal corporation.

A-2. AUTHORIZED PERSONNEL. The Mayor of the City of Carl Junction, or his appointed designee, shall act as the Director of Public Works, as herein designated. Until the City of Carl Junction shall appoint a City Engineer, the Mayor, or his duly appointed designee, shall act as City Engineer when referred to herein.

A-3. BIDDER. Any individual, firm, association, or corporation submitting a proposal for the improvement contemplated, acting directly or through a duly authorized representative.

A-4. CONTRACTOR. The bidder who shall be licensed in the City of Carl Junction, Missouri, and furnish satisfactory bond and enter into a contract with the City of Carl Junction, Missouri.

A-5. THE CODE. Any reference to the Code is interpreted to mean the Code or Ordinances of the City of Carl Junction, Missouri.

A-6. SURETY. The party who is bound with and for the Contractor to insure the payment of all lawful debts pertaining to and for the acceptable performance of the contract.

A-7. PROPOSAL. The written offer submitted by the bidder in the required manner to perform the work contemplated.

A-8. SPECIFICATIONS. The directions, provisions, and requirements contained herein as supplemented by such special provisions and supplemental agreements as may be necessary, describing the method and manner of performing the work, the quality and quantity of materials to be furnished under the contract.

A-9. PLANS. All official drawings, or reproductions of drawings, made or to be made, pertaining to the improvement provided by the contract, or any work in connection therewith.

A-10. CONTRACT PRICE. The sum of the products of the estimated quantities and the respective unit prices or the lump sum set forth in the proposal and the construction contract-agreement, whichever is applicable to the particular project.

A-11. CONTRACT BOND. The approved form of security furnished by the contractor and his surety as a guarantee that the contractor will execute the work in accordance with the terms of the contract and will pay all lawful claims.

A-12. NOTICE TO PROCEED. A written notice from the Mayor of Carl Junction notifying the Contractor of the date on which he is to begin the prosecution of the work for which he has contracted. The date set forth in this notice shall be considered the official starting date, and the time of completion shall be computed from that date.

A-13. CHANGE ORDER. Written authorization issued by the Mayor of Carl Junction as required for changes in the plans, specifications, or terms of contract. Such change orders shall be prepared on a specified form, which shall set forth the nature of the change and the agreed upon cost of same. The change order shall not be binding until such form is completed and signed by the Contractor and the

Mayor of Carl Junction.

A-14. ASTM. The American Society for Testing Materials.

A-15. AASHTO. The American Association of State Highway Officials.

A-16. MoDOT. Missouri Department of Transportation.

A-17. CRSI. Concrete Reinforced Steel Institute.

A-18. AISC. American Institute Steel Construction.

A-19. PCA. Portland Cement Association.

A-20. APWA. American Public Works Association.

PROPOSAL REQUIREMENTS AND CONDITIONS

B-1. SUBMISSION OF PROPOSALS: All proposals shall be made on the prescribed form furnished to each bidder with the contract documents. Each bidder will be supplied two copies of the proposal form; one shall be retained by the bidder for his record and one, submitted for bidding, shall be placed in the special bid envelope furnished with these documents and deposited with the City at the time and place set forth in the Notice to Contractors.

B-2. IRREGULAR PROPOSALS: Proposals may be rejected that are not submitted on the prescribed form, entirely free from erasures, omissions, or alterations of form. No bid will be considered which has been conditioned by the bidder. In case the bidder notes a requirement in any of the contract documents which he believes will require a conditioned or solicited alternate bid, he shall notify the City in order that the City may review the matter and amend these specifications or plans by addendum prior to the time of receiving bids.

B-3. BIDDER'S DEPOSIT WITH BID: No proposal will be considered unless cash or certified check on a solvent bank or trust company for the amount set forth under each item advertised in the "Notice to Contractors" has been previously deposited with the City, and his certificate therefore accompanies the proposal. A bid bond, by an incorporated surety company authorized to do business in the State of Missouri, in the amount specified will be accepted.

B-4. WITHDRAWAL OF PROPOSALS: Bidders will be given permission to withdraw, modify, or revise a proposal after it has been deposited with the City, provided the bidder makes his request in writing to the City before the actual opening of the proposals. Telegrams or communications that are received or show evidence that they were delivered to the City prior to the actual opening of bids for the items on which the proposals are submitted, will be accepted and corrections made in proposals are submitted, will be accepted and corrections made in proposals in accordance with such telegrams or communications. All telegrams and other communications that alter or modify proposals shall be opened and read prior to the opening of the bid proposals.

No proposal may be withdrawn, modified or revised after any bid has been opened for the item, or items, upon which the particular proposal is submitted.

B-5. OPENING OF PROPOSALS: Proposals will be publicly opened and read at the time and place stated in the "Notice to Contractors". Bidders, or their authorized agents, and the public are invited to be present.

B-6. DISQUALIFICATION OF BIDDERS: More than one proposal from an individual, a firm, partnership, corporation, or an association under the same or different names will not be considered. Reasonable grounds for believing that any bidder is interested in more than one proposal for the work contemplated will cause the rejection of all proposals in which such bidder is interested. Any or all proposals will be rejected if there is reason for believing that collusion exists among the bidders, and no participation in such collusion will be considered in future proposals for the same work. Proposals in which the prices obviously are unbalanced will be rejected. No contract will be awarded except to a bidder who is financially responsible and capable of performing the type of work contemplated.

B-7. FAMILIARITY WITH THE WORK AND LAWS: The submission of a proposal on the work shall be considered as a representation that the bidder has carefully examined the site of the proposed improvement, and the plans, specifications, and other contract documents, and that the bidder is fully informed concerning the conditions to be encountered, character, quality, and quantity of work to be performed, and materials to be furnished; also that the bidder is familiar with all state laws, the City of Carl Junction, all ordinances that in any way affect the prosecution of the work, or persons engaged or employed on the work, or the materials and equipment used in the work.

B-8. QUALIFICATIONS OF BIDDERS: Prior to awarding the contract, the successful bidder must satisfy the City as to his competence to perform all the work required, and shall be licensed as a contractor in the City of Carl Junction.

B-9. QUANTITIES: The quantities shown on the estimate and in the proposal are approximate, and will not necessarily be used in establishing final payment. Each bidder shall make his own estimate of the quantities required and calculate his unit price bid accordingly. Payment on the contract will be based on actual number of units installed on the completed work.

AWARD AND EXECUTION OF CONTRACT

C-1. WITHDRAWAL OF PROPOSAL: After the opening of bids, no bidder may withdraw his proposal until thirty (30) days have elapsed after the date and time of opening bids.

C-2 RIGHT TO REJECT PROPOSALS: The City reserves the right to reject any or all bids and to advertise for new bids.

C-3. AWARD OF CONTRACT: After opening proposals, the City may require the three (3) low bidders to submit a financial statement, experience record, and a listing of the equipment, immediately available for the prosecution of the work. As soon as practical after opening bids, an award will be made by the City to the lowest and best bidder. This award by the City shall require that all contract documents be executed in quadruplicate by the Contractor and his Surety and returned to the City within ten (10) days after the date of notice of award. If the award of contract by the City shall not be binding on the City until such award has been confirmed by the passage of an appropriate ordinance by the City, such fact will be recited in the construction contract agreement.

C-4. RETURN OF CERTIFIED CHECKS: The City will authorize the City to return all certified checks or cash deposits except those of the three (3) lowest bidders, which will be retained until the successful bidder has executed the contract and bond.

C-5. PERFORMANCE AND PAYMENT BONDS: The successful bidder at the time of execution of contract shall furnish surety bonds, otherwise known as a Performance Bond and a Payment Bond executed by an incorporated surety company authorized to do business in the State of Missouri, in amounts and for periods as may be set out in the construction specifications for each contract; such bonds guaranteeing that said bidder will well and truly perform the covenants contained in the contract and will pay for the work and labor of all laborers, subcontractor teamsters, truck drivers, employed, and owners of equipment used on the work, and for all materials therein, and further guaranteeing the City against faulty workmanship and materials incorporated in the work covered by the contract for a period of one year.

C-6. FAILURE TO EXECUTE CONTRACT: Failure to give satisfactory security in a sum; equal to the contract price or failure to execute the contract within ten (10) days as specified shall be just cause for annulment of the award, or of the contract, if executed, and in the event of the annulment of the award of the contract because of such failure, it is agreed by the bidder that the certified check or cash deposited with the City shall become the property of the City and will be retained, not as a penalty, but as liquidated damages.

C-7. SUBLETTING OF CONTRACT: The contract or any portion thereof shall not be sublet except with the written consent of the City. No such consent shall be construed as making the City a part to such subcontract, or subjecting said City to liability of any kind of any subcontractor. No subcontract shall, under any circumstances, relieve the Contractor of his liability and obligation under his contract, and all transactions with the City must be through the General Contractor.

Subcontractors will be recognized and dealt with only as workmen and representatives of the General Contractor and as such, shall be subject to the same requirements as to character and competence as set forth in Section D-5 of this document.

GENERAL PROVISIONS

D-1. SCOPE OF WORK: The Contractor shall furnish all labor, materials, equipment, construction plant, and supervision necessary to construct and complete the improvement as set forth in the plans and specifications, excepting only those marked "to be done or furnished by others" or "not in contract", the Contractor shall fully complete the project and leave the work and site in a neat and finished condition. A detailed description of the scope of work will be given in the construction specifications but such description shall not limit the responsibility of the Contractor to fully complete his contract in accordance with the full intent of all contract documents.

D-2. UNAUTHORIZED WORK: Work done without lines and grades being given, work done beyond the lines and grades shown on the plans or as given, work done not shown on the plans or included in the specifications, except as herein provided, or any extra force account work done without written authority from the City will be considered as unauthorized and done at the expense of the Contractor. The City may order work so done, removed, or replaced at the Contractor's expense.

D-3. PROSECUTION OF THE WORK: The Contractor shall give his constant personal attention to the work, or shall provide a competent, and reliable superintendent who shall have full authority to act for him, and who shall be acceptable to the City. If at any time the work is not progressing in a manner satisfactory to the City, the Contractor shall increase the force, tools and equipment, as directed by the City, but the failure of the City to give such directions shall not relieve the Contractor of his obligation to complete the work at the time and in the manner specified in this contract. Should the prosecution of work, for any reason, be discontinued with the consent of the City, the Contractor shall notify the City in writing at least twenty-four (24) hours before again resuming operations.

D-4. OTHER CONTRACTOR: The Contractor is required, as far as possible , to arrange his work and dispose of his materials so as not to interfere with the operations of other contractors engaged upon adjacent work. He shall also be required to join his work to that of others in a proper manner, in accordance with the spirit and intent of the plans and specifications, and to perform his work in the proper sequence in relation to that of other contractors.

D-5. CHARACTER OF WORKMEN AND EQUIPMENT: All subcontractors, superintendents, foremen, and workmen employed by the Contractor shall be careful and competent. The City may demand the dismissal of any person employed by the Contractor, in, about, or upon the work, who misconducts himself or is incompetent or negligent in the due and proper performance of his duty, or who neglects or refuses to comply with the directions given; and such person shall not be employed again without the written consent of the City. Should the Contractor continue to employ, or again employ any such person, the City may withhold all estimates that are or may become due, or the City may suspend the work until such orders are complied with. The Contractor shall furnish such equipment as is considered necessary for the prosecution of the work in an acceptable manner and at a satisfactory rate of progress. Equipment used on any portion of the work shall be such that no unauthorized injury to adjacent property, roadways, walks, or other highways will result from its use.

D-6. COOPERATION OF CONTRACTOR REQUIRED: The Contractor will be supplied by the City with copies of the plans and specifications, and he shall have available on the work at all times during the prosecution of the work one copy of each of said plans and specifications. He shall give the work his constant attention to facilitate the progress thereof and shall cooperate with the City in every possible way. He shall have at all times a competent and reliable representative on the work, authorized to receive orders and to act for him, in case of his absence.

D-7. LAWS TO BE OBSERVED. The Contractor shall at all times observe and comply with all Federal and State laws, local bylaws, ordinances, and regulations that in any manner affect the prosecution of the work. The Contractor and his surety shall indemnify and save harmless the City and its officers, engineers, representatives, agents, and employees against any claim or liability rising from or based on the violation of any such law, bylaws, ordinance, regulation, order, or decree, whether by himself, his employee, or his subcontractor.

D-8. PUBLIC CONVEYANCE AND SAFETY: The Contractor shall at all times observe City ordinances relating to obstructing streets, maintaining signals, keeping open passageways, and protection of same where exposed and generally obey all laws and ordinances controlling or limiting

those engaged on the work; and said contractor his surety hereby expressly bind themselves to indemnify and save the City and its representatives harmless from all suits or actions of every name and description, brought against said City for or on account of any injuries or damages received or sustained by any party or parties from the acts, omissions, or negligence or said Contractor or his servants or agents, including subcontractors in doing the work herein contracted for, or by or in consequence of any negligence in guarding the same, or in any improper materials used in its construction, or by or on account of any act or omission of the said contract, or on account of any claims or amounts recovered for infringement of patent, trademark, or copyright, or from any claims or amounts arising or recovered under the Worker's Compensation Law. In case there is any money due the Contractor, so much of the money due the said Contractor as the City shall deem necessary to protect the City will be retained by the City until such suit or suits, action or actions, claim or claims, injuries or damages, as aforesaid, shall have been settled and suitable evidence to that effect furnished to the City.

The Contractor shall put and maintain sufficient lights at night, and shall erect and maintain suitable barricades, and take any and all other proper precautions to guard against damage or injury to persons or property, and streets and alleys shall be open to traffic at all times during construction except when special permission is granted by the City for temporary closing of such streets and alleys.

D-9. USE OF EXPLOSIVES: The Contractor shall not blast any rock or other materials, or allow the same to be done in the prosecution of the work, unless he secures a blasting permit from the City. The Contractor shall use the utmost care so as not to endanger life or property. All explosives shall be stored in a safe manner and all such storage places shall be marked "Dangerous Explosives", and shall be in charge of competent watchmen at all times. All applicable Federal, State, and local laws and regulations pertaining to the use, storage, and handling of explosives shall be strictly obyed.

D-10. BLASTING: Where blasting is necessary, suitable weighted plank coverings or mattresses shall be provided to confine all materials lifted by the blasting within the limits of the trench or other excavation, and to prevent injury to life and property. All excavated rock that cannot be shoveled as earth shall be kept separate from other excavated materials and shall not be mixed with other backfill material except as directed.

D-11. PRESERVATION AND RESTORATION OF PROPERTY, TREES, MONUMENTS, ETC.: The Contractor shall not enter upon private property for any purpose without obtaining the permission of the owner and he shall be responsible for the preservation of all public and private property, trees, monuments, pole, and pipelines, etc., along and adjacent to the line of work and shall use every precaution necessary to prevent damage or injury thereto. He shall use suitable precaution to prevent damage to pipes, conduits, and other underground structures, and shall protect carefully from disturbance or damage all land monuments and property landmarks until an authorized agent has witnessed or otherwise referenced their location, and shall not remove them until directed. The Contractor shall not unnecessarily injure or destroy trees or shrubs in any right-of-way, and he shall not remove or cut them without proper authority. He shall be responsible, during the prosecution of the work, for all damage or injury to property of any character, or to persons, resulting from any act, omission, neglect, or misconduct in his manner or method of executing said work, his non-execution of said work, or due to defective work or materials. When or where any direct or indirect damage or injury is done to public or private property by or on account of any act, omission, neglect or misconduct in the execution of the work, or in consequence of the non-execution thereof on the part of the Contractor, he shall restore, at his own expense, such property to a condition similar or equal to that existing before such damage or injury was done, by repairing, rebuilding, or otherwise restoring, as may be directed, or he shall make good such damage or injury in an acceptable manner. In case of failure on the part of the Contractor to restore such property or to make good such damage or injury, the City may, upon forty-eight (48) hours written notice, proceed to repair, rebuild, or otherwise restore such property as may be deemed necessary, and the cost thereof will be deducted from any monies due, or which may become due the Contractor under his contract.

D-12. CONTRACTOR'S RESPONSIBILITY FOR WORK: Until work is accepted by the City, it shall be in the custody and under the charge and care of the Contractor, and he shall take every necessary precaution against injury or damage to the work by the action of the elements or from any other cause whatsoever. The Contractor shall rebuilt, repair, restore, and make good, at his own expense, all injuries, or damages to any portion of the work before its completion and acceptance. Issuance of any estimate or partial payment on any part of the work done will not be considered as final acceptance of any

work completed up to that time.

D-13. TESTING FOR QUALITY CONTROL: The Contractor shall engage and pay for the services of a qualified independent sampling and testing contractor to perform all field and laboratory sampling, testing, analysis, and preparation of reports, as the City may required, as outlined in these specifications.

D-14. INSPECTION OF MATERIALS AND WORK: The work will be conducted under the general direction of the City, and is subject to inspection by its appointed inspectors to insure strict compliance with the terms of the contract. No inspector is authorized to change any provision of the specifications without written authorization of the City, nor shall the presence or absence of an inspector relieve the contractor from any requirements of the contract.

D-15. CARE OF PIPES AND DRAINS, AND PROVISIONS FOR WATER: The Contractor shall provide for the flow of all water courses, sewer, drains, or channels interrupted during the progress of the work. Whenever water or service pipes therefrom, or drains or other improvements are uncovered during the progress of the work, the Contractor shall use care in protecting same and shall promptly notify the owners thereof and allow them reasonable time to make the necessary removal or alteration.

D-16. INFRINGEMENT AND PATENT SUITS: The Contractor shall be liable for suits brought against the City by reason of infringement on the patent right of any material, method, machine, or appliance on the work, and shall assume all liability resulting from such suits against the City.

D-17. REJECTION OF MATERIAL AND WORK: If any work done and material furnished is found defective or not in accordance with the specifications, it shall be rejected and promptly removed from the work by the Contractor, and other material furnished and work done in substitution thereof. Any defective material or workmanship may be rejected at any time before the final acceptance of the work, even though the same may have been previously overlooked.

D-18. CONTRACT TIME FOR COMPLETION OF WORK: The contract time for the completion of work is specified in the construction specifications or contract documents. A working day is defined as any day when, in the opinion of the City, soil and weather conditions are such as would permit any then major operation of the project for six (6) hours or over. If conditions are such as to stop work in less than this time, the day shall not be counted as a working day. Saturdays, Sundays, national holidays, and holidays legal in the State of Missouri shall be excluded from the count of working days unless the contractor utilizes such as a day as a working day as indicated above. The count of working days shall start on the date the contractor starts construction operation and in any event, not later than the date specified in the Notice to Proceed. The City shall be the sole judge of the number of working days to be charged under the contract. It is the responsibility of the Contractor to keep record of the number of bad weather days and submit same to the City for approval. The City shall then agree or disagree with the number of bad weather days and notify Contractor of the same. Any objection by the Contractor to such decision shall be deemed waived, and shall not thereafter be made the basis of any claim, unless the Contractor shall, within three (3) days after receipt of such notice, file with the City his written protest setting forth his objections and specifying the reasons therefor. If the Contractor's objections to the working day count is made on the grounds that he is unable to work due to causes beyond his control, he shall state his reasons in writing, furnish proof to establish his claim, and state the approximate number of days he estimates he will be delayed.

D-19. LIQUIDATED DAMAGES:

a) Time is of the essence of all contracts. As delay in the prosecution of the work will inconvenience the public, obstruct traffic, interfere with business, and increase the cost to the City, it is important that the work be prosecuted vigorously to completion. Should the Contractor, or in case of default, the surety, fail to complete the work within the time stipulated in the construction specifications, or within such extra time as may be allowed in the manner set out in the preceding section, a deduction of an amount as set out in the Construction Specifications will be made for each and every calendar day that such contract remains uncompleted after the time allowed for the completion. The said amount set out in the Construction Specifications shall be the liquidated damages for loss to the City and the public due to obstruction of traffic, interference with business, and increased cost of engineering, administration, inspection, etc. after the expiration of the time stipulated in the Construction Specifications, or as

amended as set forth in the preceding section, and will be deducted from any money due the Contractor under his contract, and the Contractor and his surety shall be liable for any liquidated damages in excess of amount due the Contractor. Permitting the Contractor to continue and finish the work or any part of it after the expiration of the stipulated time, or after any extension of the time shall in no way operate as a waiver on the part of the City or any of its rights under this contract.

b) In any suit involving the collection of liquidated damages, the reasonableness of the amount per day stipulated in the Construction Specifications shall be presumed.

c) If the City or any of its agents should cause a delay in any part of the work, or in the final completion of the job, this fact shall not void the provisions of the contract as to liquidated damages, but the Contractor shall be given such additional working days for the final completion of the job as the City may deem proper to compensate for such delay caused by the City or its agents.

D-20. ANNULMENT OF CONTRACT: If the Contractor fails to begin the work within the time specified, or fails to perform the work with sufficient workmen and equipment, or with sufficient materials to insure the prompt completion of said work, or performs the work unsuitably, or neglects or refuses to remove materials or perform anew such work as shall be rejected as defective and unsuitable, or discontinues the prosecution of the work, or from any other cause whatsoever does not carry on the work in an acceptable manner, or if the Contractor becomes insolvent or declares bankruptcy, or commits any act of bankruptcy or insolvency, or allows any final judgment to stand against him unsatisfied for a period of forty-eight (48) hours; the City shall give notice, in writing, by registered mail, to the Contractor and his surety, of such delay, neglect, or default. If the Contractor or his surety, after such notice, does not proceed to take over and complete the work under the direction of the City, then the City shall have full power and authority, without violating the contract or bond, to take over the completion of the work, to appropriate or use any or all materials and equipment on the ground that may be suitable and acceptable, to enter into agreements with others for the completion of said contract according to the terms and provisions thereof, or to use such other methods as in his opinion may be required for the completion of said contract in an acceptable manner. Such declaration of annulment must be confirmed and ratified by Ordinance before having any force or effect. For all costs and charges incurred by the City, together with the cost of completing the work, the Contractor and his surety shall be liable, and such cost may be deducted from any monies due or which may become due the Contractor. In case the expense so incurred by the City is less than the sum which would have been payable under the contractor if it had been completed by the Contractor, then the Contractor will be entitled to receive the difference, and in case such expense exceeds the sum which would have been payable under the contract, then the Contractor and his surety shall be liable and shall pay to the City the amount of said excess.

D-21. PLANS AND SPECIFICATIONS: The plans and specifications on file in the office of the City relating to any public work, and all plans which may be made by the City subsequent to the date of any contract, of an explanatory nature thereto, shall be a part of the contract and specifications.

D-22. ERRORS, OMISSIONS, ALTERATIONS: The specifications and plans are intended to supplement each other so that any work shown on the drawings and not mentioned in the specifications and set forth on the plans, to the true intent and meaning of said drawings and specifications. The Contractor shall check over the plans before beginning construction work, and if any errors or omissions are discovered, he shall call the attention of the City to them in order that the necessary corrections may be made. In no case shall the Contractor make such corrections without first consulting the City. In case any plans of a supplementary or explanatory nature are necessary or desirable, they will be furnished by the City from time to time as the work progresses. In case changes are made in the work either in increasing or decreasing the cost thereof, corresponding additions to or deductions from the amount to be paid the Contractor shall be made. Such changes in work, additions or deductions in scope of work, and adjustment of the contract price shall be considered valid and authorized when a change order has been issued by the City.

D-23. COST OF EXTRA WORK: In case extra work not covered by the contract is deemed necessary to complete or perfect the project, the Contractor shall submit to the City a proposal stating in clear detail the scope of the extra work he promises to do. This proposal shall also include a statement of the Contractor's proposed manner or determining the cost or amount which he proposes as full settlement for the extra or additional work. The City may accept any of the below described means of computing the additional cost of doing extra work.

a) If the proposal and contract contain unit prices which are applicable to the additional work, they shall be used in determining the increase in cost.

b) The City may accept a lump sum proposal from the Contractor.

c) The additional or extra work may be done by force account in the manner described below:

The price paid the Contractor for extra work for which no unit price is named in the contract and for which no lump sum price can be agreed on shall be determined in the manner set forth below:

1. The actual cost of salaries or wages for all labor used on the "extra work" including the proper proportionate time of the foreman or foremen, but not including the time of a superintendent or office personnel.

2. The actual cost or value of all material or equipment incorporated into the "Extra Work".

3. Rental, at rates not exceeding the current rental rates then prevailing in the City for all power driven equipment for the time or proportionate time such equipment is employed on the "Extra Work".

4. A fee of fifteen (15) percent of the sum of Items 1, 2, and 3 to cover superintendence, overhead expenses, rental, maintenance of tools, equipment, machinery, hand tools, bond, and profit.

5. The total amount paid for extra work shall be sum of 1, 2, 3, and 4, above, plus the amount which the Worker's Compensation, Public Liability, Property Damage, Contingent Public Liability and Property Damage, Special Hazard and Social Security Insurance is increased by the performance of the "Extra Work".

When force account "Extra Work" is authorized, accounting procedures for such work, satisfactory to the City, shall be installed.

D-24. ESTIMATED QUANTITIES: If unit prices and estimated quantities are the basis of bidding on the base contract or any extras thereto, such quantities of work as shown on plans or stated in the proposal are only approximate, and during the progress of the work, the City may find it advisable, and it shall have the right to omit portions of the work to increase or decrease quantities, and the reserves the right to add or to take from any item as may be deemed necessary or desirable. Only actual quantities will be paid for, and under no circumstances or conditions will the contractor be paid anything on account of anticipated profits upon the work, or any portion thereof covered by the contract that is not actually performed and that has not actually entered into the construction of said improvements.

D-25. MEASUREMENTS: The actual amount of work to be done may be more or less than shown on the plans and specifications, but no variation will be made in the unit rates on that account. No extra or customary trade measurements of any kind will be allowed in measuring the work under the specifications; but the actual length, area, solid contents, or number shall be considered.

D-26. TRADEMARKS: If trade names are used in the construction specifications, they are used merely to establish a standard of quality, performance, or economy of operation, and the use of such trade name or trade names shall not be considered as restrictive against similar products of equal quality not named. Special consideration will be given to products manufactured within the corporate limits of the City when such products meet the requirements of the specifications.

D-27. SUBLETTING: The Contractor shall not sublet or assign his contract, or any part thereof, without the written approval of the City. No transfers shall, under any circumstances, relieve the Contractor or his bondsmen of their liabilities and obligations under this contract.

D-28. CLEANING SITE: The Contractor shall not allow the site of the work to become littered with trash and waste material, but shall maintain the same in a neat and orderly condition through the construction period. The City shall have the right to determine what is or is not waste material or rubbish and the manner and place of disposal. On or before the completion of the work, the Contractor shall, without charge therefor, tear down and remove all temporary structures built by him, and shall remove all rubbish of all kinds from any of the tracts or ground that he has occupied, and shall leave them in an orderly and neat condition.

D-29. CONTRACTOR AN INDEPENDENT CONTRACTOR: It is expressly agreed and understood that the Contractor is in all respects an independent contractor as to such work, notwithstanding in certain respects, the Contractor is bound to follow the direction of the City, and that the Contractor is in no respect an agent, servant, or employee of the City.

D-30. CHANGE IN PLANS - BONDSMEN NOT RELEASED: It is further stipulated and agreed that the liability of the surety shall not be affected by any extension of the time of the completion of said work which may be granted by Ordinance of the City, or the changing of the plans and specifications, or the subletting of a part of the contract.

D-31. TAXES: The Contractor shall pay all Federal, State, and local taxes, including sales taxes, social security taxes, etc., which may be chargeable against the performance of the construction, materials used in construction, partially or wholly finished structures, until the time of final acceptance, and any other taxes properly assessable and payable, exclusive of real estate land taxes.

D-32. CITY NOT LIABLE FOR DELAYS: In no event shall the City be liable or responsible to the Contractor or to any other person for or on account of any stoppage or delay of the work herein provided for, by injunction or other legal or equitable proceedings, or from or by or on account of any delay from any cause over which the City has no control.

D-33. WATER: The Contractor shall furnish the water necessary for his operations or tests. The Contractor shall, at his own expense, install and maintain any water supply connections, piping, and storage required for the prosecution of the work, but only at such locations and in such workmanlike manner as may be authorized by the City.

D-34. ELECTRICITY: All electric current required by the Contractor shall be furnished at his own expense. All temporary lines shall be furnished, installed, connected, and maintained by the Contractor

in a workmanlike manner satisfactory to the City, and shall be removed by the Contractor in like manner at his expense at the completion of construction.

D-35. TEMPORARY HEATING: During construction operations, the Contractor shall furnish and install any temporary heating facilities required to provide heat for any trades whose installation work necessitates certain temperature requirements.

D-36. SHOP DRAWINGS: The Contractor shall submit to the City for approval four (4) copies of all shop drawings called for under the various headings of these specifications, or on the drawings. These drawings shall be complete and shall contain all required detailed information. If approved by the City, one set will be returned to the Contractor with the approval marked thereon.

D-37. GUARANTY: Any equipment furnished pursuant to any specifications shall be guaranteed for a period of one year form the date of final acceptance thereof against defective materials, design, and workmanship. Upon receipt of notice from the City of failure of any part of the guaranteed equipment during the guaranty period, the affected part or parts shall be replaced promptly with new parts by, and at the expense of the Contractor.

D-38. STAKES: The Contractor shall employ a competent surveyor, whose work meets the approval of the City, to set the line and grade stakes for all construction work. Should the City forces do the staking work, it will be the Contractor's responsibility to preserve them, and in the event of his failure to do so, the cost of the City in resetting them will be paid by the Contractor.

D-39. TIME FOR INSPECTION: Any inspection required by the specifications to be made by the City will be made within three days, by the City or it's authorized representative, after receipt by it of notice from the Contractor that said work is ready for inspection.

NOTE: If the execution of the work requires the closing of City streets to through traffic, it shall be responsibility of the Contractor to notify the City and the Fire and Police Departments forty-eight (48) hours in advance. It shall further be the responsibility of the Contractor to provide proper signs for detouring traffic with the minimum of confusion, and the Contractor shall make every effort to provide residents vehicular access to their homes and driveways, especially at night.

INSURANCE REQUIREMENTS

E-1. CONTRACTOR'S INSURANCE: The Contractor shall not commence work under any contract until he has obtained all insurance required under this section and such insurance coverage has been approved by the City, nor shall the Contractor allow any subcontractor to commence work on his subcontracts until all similar insurance required of the subcontractor has been so obtained and approved.

(A) Public Liability and Property Damage Insurance:

The Contractor shall take out and maintain, during the life of this contract, such public liability and property damage insurance as shall protect him and any subcontractor performing work covered by this contract, from claims for damages for personal injury, including accidental death, as well as from claims for property damages, which may arise from operations under this contract, whether such operation be by himself or by any subcontractor or by anyone directly or indirectly employed by either of them, and the amount of such insurance shall be as follows:

Public liability insurance in an amount not less than

$100,000

For injuries, including accidental death to any one person, and subject to the same limit for each person, in an amount not less than

$200,000

on account of one accident, and Property Damage Insurance in an amount not less than

$50,000

Automobile, Truck, and Team Public Liability and Property Damage Insurance must be carried by each Contractor and/or Subcontractor where automobiles, trucks, or teams are used at the project site by such Contractor and/or Subcontractor.

(B) Insurance Covering Special Hazards:

The following special hazards shall be covered by rider or riders to the Public Liability and/or Property Damage Insurance policy or policies herein elsewhere required to be furnished by the Contractor or by separate policies of insurance, in amounts as follows:

Operation of each vehicle away from project site

$20,000

(C) Contingent Insurance:

The Contractor shall provide continent or Protective Public Liability Insurance in an amount not less than

$100,000

and Contingent or Protective Property Damage Insurance in amounts not less than

$20,000

If work is subcontracted, applicable to subcontractors as well, in the event they sublet any of their work.

(D) The City may accept insurance covering a Subcontractor in character and amounts less than the standard requirements set forth herein where such standard requirements appear excessive because of the character or extent of the work to be performed by the Subcontractor.

(E) Insurance Protecting the Owner:

The Contractor shall provide and maintain insurance to protect the City and its representatives against any and all claims for damages for personal injury, including accidental death, as well as from claims for property damage, which may arise from operations under this contract, whether such operations be by the Contractor or any of his subcontractors, or by any one directly or indirectly employed by the Contractor or his subcontractors. The minimum protection provided for this coverage shall be of the same character and the same amounts set forth in the preceding paragraphs E-1 a) and b) of this section. This coverage will be considered acceptable when provided in one of the following methods:

1) By issuance of original policy designating the Contractor and the City as the insured parties under the provisions of the policy.

2) By endorsement to an original policy, which endorsement shall extend to the City the same coverage and protection stipulated in the paragraph above.

3) By separate contingent policy providing the required insurance coverage for the protection of the City.

(F) Proof of Carriage of Insurance:

The Contractor shall furnish the City, prior to start of any operation on the project, satisfactory proof of carriage of the insurance required. The certificate must show the cancellation provision of the policy. No policy is acceptable to the owner which can be canceled by the insurer in less than ten (10) days after the insured, including the owner, has received written notice of such cancellation. It is requested that each insurance certificate contain a clause substantially as follows:

> "The policies referred to herein provide that they cannot be canceled by the insurer in less than ten (10) days after the insured has received written notice of such cancellation."

E-2 SCOPE OF PAYMENT: The Contractor shall receive and accept the compensation provided for in the contract as full payment for furnishing all materials, labor, tools, and equipment, and for performing all work contemplated and embraced under the contract; also for all loss or damage arising out of the nature of the work, or from the action of the elements; also for all expenses incurred by, or in consequence of the suspension or discontinuance of the said prosecution of the work as herein specified, or from any unforeseen difficulties or obstructions for all risks of every description connected with the prosecution of the work until its final acceptance by the City. The compensation shall be considered as full payment for the completion of the work in an acceptable manner according to the plans and specifications, and it shall be understood that the Contractor and his Surety shall indemnify and save harmless the City from any suit, cost, or penalty, for any infringement of patent, trademark, or copyright that may be encountered in the prosecution of the said work. The payment of any current or final estimate or the acceptance of any portion of the work as provided in the standard specifications shall in no way or in no degree affect the obligation of the Contractor, who, at his own expense, shall repair, correct, renew, or replace any defects or imperfections in the construction, strength, or quality of materials used in or about the construction of the work under the contract, and this payment shall in no way affect his responsibility for all damages due or attributable to such defects or imperfections which may be discovered before the final acceptance of the whole work, and of which defects or imperfections, the City will be the judge.

DIVISION 100

CONSTRUCTION MATERIALS AND METHODS

FOR

SANITARY SEWER SYSTEMS

101 MATERIALS

101-1 Gravity Sewer Pipe shall be PVC or Closed Profile PVC pipe conforming to the following specifications.

101.1.1 PVC pipe shall be solid wall meeting the requirements of ASTM D3034, latest revision, with a minimum diameter of 8" and wall thickness SDR35 for sizes 8" thorough 15" being buried less than 12 feet and SDR26 for pipe buried 12 feet or greater; and meeting ASTM F-679 for 18" and larger. Pipe shall be extruded with one end to serve as a spigot end and the other as a bell end, with a gasket groove molded inside for retention of a rubber gasket used in making the joint. Standard laying lengths shall be 12.5' or 20'. All 4" and 6" PVC service lateral pipe, fittings, and associated cleanouts shall be Schedule 40 PVC meeting all applicable testing and ASTM standards, latest revision, for Schedule 40 PVC pipe.

101.1.1.1 Drop Impact Test: Pipe shall withstand, without failure at 73°F, an impact of a falling missile (20 pounds Tup A) at the following levels, in accordance with ASTM D2444 latest revision:

Nom. Size (")	Ft.-Lbs.
4	150
6	210
8	210
10 or Larger	220

101.1.1.2 Pipe Stiffness: Minimum pipe stiffness (F/delta-y) at 5% deflection shall be 46 PSI for all sizes when tested in accordance with ASTM D2412, latest revision.

101.1.1.3 Flattening: There shall be no evidence of splitting, cracking, or breaking when a specimen of pipe, six-inches long, is flattened between parallel plates in a suitable press until the distance between the plates is forty percent of the outside diameter of the pipe. The rate of loading shall be uniform and such that the compression is completed within two to five minutes.

101.1.2 Closed Profile PVC Gravity Sewer Pipe: Closed profile gravity sewer PVC pipe shall meet the requirements of ASTM F1803, latest revision. The pipe shall be manufactured with an integral bell and elastomeric seal joint conforming to ASTM D-3212. Gaskets shall be factory installed and chemically bonded to the bell end of the pipe. Gasket material shall conform to the requirements of ASTM F-477. The pipe and fittings shall be made from polyvinyl chloride compounds, which comply with the requirements for a minimum cell classification of 12364 as defined by ASTM D-1784. Shall be used when specified by the City and only for pipes 24" in diameter and larger.

101.1.2.1 Drop Impact Test: Pipe shall withstand, without failure at 73°F, an impact of a falling missile (30 pounds Tup B, flat plate holder B) to a level of 220 ft-lbs, in accordance with ASTM D2444, latest revision.

101.1.2.2 Pipe Stiffness: Minimum pipe stiffness (F/delta-y) at 5% deflection shall be 46 PSI for all sizes when tested in accordance with ASTM D2412, latest revision.

101.1.2.3 Flattening: There shall be no evidence of splitting, cracking, or breaking when a specimen of pipe, six-inches long, is flattened between parallel plates in a suitable press until the distance between the plates is forty percent of the outside diameter of the pipe. The rate of loading shall be uniform and such that the compression is completed within two to five minutes.

101.1.2.4 Fusion Quality: There shall be no sign of flaking or disintegration when immersed in anhydrous acetone for 20 minutes as described in ASTM D2152.

101.1.2.5 Air Tightness: Each length of pipe shall pass a factory 3.5 psi air test as described in ASTM F1803.

101-2 Pressure Sewer Pipe: Pipe for pressure sewers shall be either PVC or ductile iron.

101.2.1 PVC pipe for pressure sewer lines shall be solid wall meeting the requirements of ASTM D2241, latest revision, with minimum wall thickness SDR 21 (Class 200). Thicker wall pipe may be required for certain pressure applications, as determined by the City. Pipe shall have an integral bell with a locked-in, solid cross section elastomeric gasket that meets the requirements of ASTM F477, latest revision. Provisions must be made for contraction and expansion at each rubber ring bell and spigot joint. Pipe shall be made from clean, virgin, NSF approved PVC material conforming to ASTM D1784, latest revision.

101.2.1.1 SDR 21 pipe shall be suitable for use at maximum hydrostatic pressures of 200 PSI at 73°F.

101.2.1.2 Physical and Chemical Tests: Pipe shall meet the following physical and chemical test requirements. All physical and chemical tests shall be conducted at 73°F ± 3.6°F.

Test	ASTM Ref.	Requirements
Quick Burst Test	D1599	630 PSI applied in 60 to 70 sec.
Sustained Pressure Test	D1598	1000 hrs. @ 420 PSI
Acetone Immersion Test	D2152	No visible spalling or cracking after 20 minutes
Vise Test	--	No splitting or shattering when compressed 60% in 2 to 5 minutes

101.2.2 Ductile iron pipe for pressure sewer lines 3-inch through 12-inch size shall be pressure class 350 and shall conform to the latest revision of ANSI A21.51 - (AWWA C151) Standard for Ductile Iron Pipe Centrifugally Cast in Metal Molds or Sand Lined Molds, for Water or Other Liquids. The pipe shall be standard asphaltic varnish coated on the outside. Pipe shall be cement mortar lined in conformance with ANSI A21.4-90 - (AWWA C104) unless specified otherwise.

101.2.2.1 Joints for ductile iron pipe that is to be buried shall be a push-on type. The push-on type joints consisting of a single neoprene gasket, which are acceptable, are "Tyton" as manufactured and licensed by the U.S. Pipe and Foundry Company; "Fastite" as manufactured and licensed by the American Cast Iron Pipe Company; and "Bell-Tite" as manufactured and licensed by James B. Clow and Son,

Inc. All required joint material, including the neoprene gasket and the lubricant, shall be furnished with the pipe.

101-3 Pressure Sewer Fittings: Fittings for pressure sewer lines larger than four (4) inches in diameter shall be mechanical or push-on joint of either gray iron or ductile iron, and shall conform to the requirements of ANSI/AWWA C110/A21.10 or C153/A21.53, latest revisions. All fittings shall be coated and lined in the same manner as the pipe. All mechanical fittings shall be pressure class 350 ductile iron. Fittings shall be standard asphaltic varnish coated on the outside. Fittings shall be cement mortar lined in conformance with ANSI A21.4-80 (AWWA C104). Mechanical joint and push-on joint gaskets shall meet all applicable requirements of ANSI 21.11 (AWWA C111), latest revision.

101.3.1 Fittings for pressure sewer lines four (4) inches in diameter and smaller shall be of the same material as that of pipe.

101-4 Precast Manholes and Manhole Drops:

101.4.1 Materials:

101.4.1.1 Portland Cement: Shall conform to ASTM C150, latest revision, Type I, II, or V.

101.4.1.2 Concrete Reinforcement: Shall be reinforcing bars conforming to ASTM 615, Grade 60.

101.4.1.3 Aggregate: Shall conform to ASTM C33, latest revision, for coarse and fine aggregate.

101.4.1.4 Mortar: Shall conform to ASTM C270, latest revision, Type M.

101.4.1.5 Water: Mixing water shall be clean and potable.

101.4.1.6 Dampproofing: Shall conform to Koppers Specifications for Coal Tar Bitumastic Super Service Black or an approved alternate.

101.4.1.7 Joint Sealant: Shall meet AASHTO Specification M-198, and shall be suitable for application in vertical and horizontal joints. Sealant shall be as manufactured by Hamilton-Kent, Ram-Nek, or approved equal. In cases where water infiltration might be an issue, additional measure shall be taken to seal around the manhole casting. Specified manhole castings shall include a Uni-band, as manufactured by Infi-Shield, or approved equal.

101.4.1.8 Manhole Pipe Connectors: Shall be a resilient connector designed to make a watertight seal between the precast manhole and sewer pipe, conforming to the requirements of ASTM C923, latest revision. Connectors shall be A-LOK, as manufactured by A-LOK Products, Inc. or approved equal.

101.4.1.9 Grout: Grout shall be a pre-mixed, packaged, non-ferrous, aggregate non-shrink grout. Grout shall be SEALTIGHT 588 Grout, as produced by W.R.Meadows, or approved equal.

101.4.1.10 Manhole Castings: Unless noted otherwise, all castings shall be made of clean, even grain, tough gray cast iron. The casting shall be smooth, true to pattern, and free from projections, sand holes, warp, and other defects that would

interfere with the use of, or impair the serviceability of the casting. All castings shall be well cleaned before enamel coating is applied. The iron used for these castings shall conform to ASTM A48, latest revision, for Class 30 gray iron. The "B" test bar (1.2" diameter by 21" long) shall be used to prove the quality of iron used. Manhole frames and covers shall be designed for heavy duty service. Cover shall be solid with two (2) pick holes and the total weight of the unit shall be 400 pounds minimum. A minimum access diameter of 24" shall be provided.

101.4.1.11 Manhole Steps: Manhole steps shall be copolymer polypropylene plastic steps with ½-inch grade 60 steel reinforcement as manufactured by M.A. Industries, Inc., Model PSI-PF, or polyethylene steps with 3/4-inch O.D. 6351-T6 aluminum tubing as manufactured by MSU Mississauga Ltd., Model 360, or approved equal.

101.4.1.12 Manhole Drops:

A drop pipe should be provided for a sewer entering a manhole at an elevation of 24" or more above the manhole invert.

(a) Type A Drop: Shall be constructed of SDR-35 PVC pipe and shall be utilized for all drops of two feet minimum up to eight feet maximum.

(b) Type B Drop: Shall be constructed of ductile iron pipe and shall be utilized for all depths greater than eight feet.

101.4.2 Fabrication and Construction Requirements:

101.4.2.1 Fabrication and Manufacturing: Precast reinforced concrete manholes shall be manufactured to requirements of ASTM C478 and ASTM C497, latest revision and shall be of the type, size, and configuration shown on the drawings. Manhole tops shall be of the eccentric type. The minimum allowable wall thickness shall be determined by the manhole depth as below:

Depth	Minimum Wall Thickness
0 to 16 feet	1/12 of internal diameter
16 feet or greater	1/12 of internal diameter + 1"

Minimum internal diameter of any manhole section shall be 4 feet. Dampproofing shall be factory applied on all interior and exterior surfaces except to the interior surface of the bottom section. Dampproofing shall be field applied to the interior surface of the bottom section after base and fillet have been placed. Dampproofing system shall be Koppers Coal Tar Bitumastic Super Service Black or an approved alternate, applied to manufacturer's specifications. Two coats, each of minimum 14 mils dry thickness, shall be applied. A 75-volt maximum wet sponge detector shall be employed to check for holidays in the dried finish film.

101.4.2.2 Construction:

(a) Joints in the precast concrete manhole shall be set in a double ring of pre-molded mastic material or rubber gasket to produce an absolutely watertight joint under full hydrostatic head conditions.

(b) Bases shall be either 6" thick precast flat bases, with inverts

constructed in the field, or shall be a precast bottom with precast integral bottom, or shall be cast-in-place with precast units set into a reinforced concrete base constructed of 3,500 min. psi concrete, 4-inch max. slump, and #4 rebars at 12-inch on center each way. Bottom section shall be set into the base a minimum of 12 inches. Base shall extend not less than 6 inches from outside manhole wall.

(c) Precast riser sections shall be set plumb and oriented with manhole steps and access opening to match the detailed drawings designations.

(d) Inlet and outlet pipes shall extend through the walls of the structures a sufficient distance beyond the outside surface to allow for connections, and shall extend six inches beyond the inside surface of the wall. The new manhole shall be cleaned of silt, debris, or other foreign matter prior to acceptance.

(e) Openings in manhole sections for inlet and outlet pipes shall be formed at the factory, and shall utilize cast-in-place manhole pipe connector gaskets.

(f) Invert channels shall be smooth and semi-circular in shape conforming to the inside of the adjacent pipe line sections with change in flow direction made by a smooth curve of as large a radius as the manhole size will permit, and changes in the size and grade of the channels being made gradually and evenly. Manhole floor shall rise a minimum of 1 inch per foot from side of channel to wall.

(g) All lifting holes shall be thoroughly wetted and completely filled with non-shrinking grout to form a watertight seal.

(h) All castings, frames, and covers shall be set true to line and to correct elevation upon a mastic gasket. Frames and covers shall have true common bearing surfaces, such that the covers will seat firmly without rocking or shifting.

(l) Manholes shall not leak more than 1.14 gallons per day per vertical foot of manhole under a full hydrostatic head.

(j) The drop pipe in manhole drops shall be constructed using standard pipe sections and fittings so as to enter at the bottom of the manhole and also continue the incoming line in a straight line to enter the manhole at a higher elevation, all as shown on the detailed drawings.

(k) All manholes which are subject to standing water over the top of the lid shall have a gasketed, bolt-down lid.

101.4.3 Inspection and Rejection: The quality of materials, the process of manufacture, and the finished manhole sections shall be subject to inspection and approval by the City. Manhole sections shall be subject to rejection for failure to conform to any of the specified requirements. In addition, individual sections may be rejected because of any of the following:

101.4.3.1 Fractures or cracks passing through the wall;

101.4.3.2 Defects that indicate imperfect proportioning, mixing, and molding.

101.4.3.3 Surface defects indicating honeycombed or open texture;

101.4.3.4 Damaged or cracked ends where such damage would prevent making a satisfactory joint;

101.4.3.5 Any continuous crack having a surface width of 0.01 inch or more and extending for a length of 4 inches or more.

101-5 Pipe Bedding Material:

101.5.1 Granular Stone:

101.5.1.1 Granular stone pipe bedding material shall be crushed limestone consisting of aggregate particles meeting the requirements of ASTM C-33, latest revision, gradation 67, 1-inch to No. 8 size as follows:

Sieve Size	Percent Passing
1"	100
3/4"	90-100
3/8"	20-55
No. 4	0-10
No. 8	0-5

101-6 Steel Casing Pipe: Steel pipe for casing at highway and railroad crossings shall conform to AWWA C200-91.

101.6.1 Minimum wall thickness shall be in accordance with the following table:

Diameter of Casing - Inches	Nominal Wall Thickness - Inches Under Railroads	All Other Uses
16	0.312	0.188
18	0.312	0.250
20	0.375	0.250
22	0.375	0.250
24	0.406	0.281
26	0.438	0.281
28	0.469	0.312
30	0.469	0.312
32	0.500	0.312
34	0.500	0.312
36	0.500	0.344

101.6.2 Steel shall be Grade B under railroads, and Grade A on all other uses.

101.6.3 Steel pipe shall have welded joints in accordance with AWWA C206.

101-7 Pumping Station Material and Equipment: Material and equipment for sewage pumping station will be reviewed and approved on a case-by-case basis due to the frequency of industry standards changing. It is recommended that the design engineer contact the City prior to submitting plans and specifications, to request a list of approved equipment manufacturers. Chain link fencing with grounding and 4" of crushed stone surfacing over the entire lift station site shall be required for all newly constructed lift stations. All areas receiving crushed stone surfacing shall receive a sterilant over the entire site. The sterilant shall be Monsanto Roundup or an approved equal, and shall be applied according to manufacturer's instructions.

101.7.1 Chain Link Fences and Gates:

101.7.1.1 Material and Coating: Posts, gate frames, braces, rails, stretcher bars, and truss rods shall be of steel reinforcing wires shall be of high carbon steel; and gate hinges, post caps, barbed wire and supporting arms, stretcher bar bands, and other parts shall be of steel, malleable iron, ductile iron or equal except that ties and clips may be of aluminum. All steel and iron parts shall be zinc coated after fabrication, using zinc grade "E" in accordance with Federal Specification QQ-Z-351. The weight of the zinc coating per square foot of actual surface area shall average not less than 1.2 ounces and no individual specimen shall show less than 1.0 ounces. The SS-40 pipe shall have a zinc coating of 0.9 ounces of zinc per square foot with a Chromate conversion coating and then a thermoplastic acrylic coating of not less than 0.3 mils dry film thickness. The SS-40 shall also have a zinc rich interior coating of not less than 0.3 mils dry film thickness.

(a) Lift station perimeter fencing shall consist of galvanized steel chain link fence with a fabric height of six (6) feet and an overall height of seven (7) feet from the bottom of the fabric to the top barbed wire. Fence shall have a top rail, bottom tension wire, and three strands of barbed wire mounted on 45 degree extension arms. Posts shall be set in concrete. Fence fabric shall be 11 gauge zinc-coated steel.

101.7.1.2 Gates: Gates shall be swing, complete with latches, stops, keepers, and hinges with provision for three strands of barbed wire above the fabric.

(a) Gate Frames: Constructed of tubular members (round or square) welded at all corners or assembled with fittings. On steel, welds shall be painted with aluminum base or zinc base paint. Where corner fittings are used, gates shall have truss rods of 3/8-inch nominal diameter to prevent sag or twist. Gate leafs shall have vertical intermediate bracing as required, spaced so that no members are more than eight feet apart. End members of the gate frames shall be extended one foot above the top horizontal member to which three strands of barbed wire, uniformly spaced, shall be attached by use of bands, clips, or hook bolts. Gate filler shall be of the same fabric as specified for fence and shall be attached securely to gate frame at intervals of 15 inches.

(b) Hinges: Adequate strength for gate, and with large bearing surfaces for clamping in position. The hinges shall not twist or turn under the action of the gate. The gates shall be capable of being opened and closed easily by one person.

(c) Latches, Stops and Keepers: Provided for all gates. Latches shall have a plunger-bar arranged to engage the center stop, except that for single gates of openings less than 10 feet wide, a forked latch may be provided. Latches shall be arranged for locking. Center stops shall consist of a device arranged to be set in concrete and to engage a plunger bar of the latch of double gates. No stop is required for single gates. Keepers shall consist of a mechanical device for securing the free end of the gate when in the full open position.

101.7.1.3 Posts: Shall be of the lengths specified and shall be tubular, except that line posts may be H-beam.

(a) Post Braces: Provided for each gate corner, pull, and end post,

and shall consist of a round tubular brace extending to each adjacent line post at approximately mid height of the fabric, and a truss consisting of a rod not less than 3/8-inch in nominal diameter from the line post back to the gate, corner, pull, or end post, with a turnbuckle or other equivalent provision for adjustment.

(b) Post Tops: Combination tops with barbed-wire supporting arms. The post tops shall fit over the outside of posts and shall exclude moisture from tubular posts.

101.7.1.4 Barbed Wire Supporting Arms: Shall be at an angle of approximately 45 degrees, and shall be fitted with clips or other means for attaching three strands of barbed wire. With 15-inch arms the top wire shall be approximately 12 inches horizontally from the fence line and the other wires spaced uniformly between the top of the fence fabric and the outside strand. Barbed wire arm shall be of sufficient strength to withstand a weight of 200 pounds applied at the outer strand of barbed wire.

101.7.1.5 Top Rails: Shall be round (tubular), shall be in lengths not less than 18 feet, and shall be fitted with couplings for connecting the lengths into a continuous run. The couplings shall be not less than six inches long, with 0.070 minimum wall thickness, and shall allow for expansion and contraction of the rail. Open seam outside sleeves shall be permitted only with a minimum wall thickness of 0.100 inches. Suitable ties or clips shall be provided in sufficient number for attaching the fabric securely to the top rail at intervals not exceeding two feet. Means shall be provided for attaching the top rail to each gate, corner, pull, and end post.

101.7.1.6 Stretcher Bars: Shall not be less than 3/16 by 3/4-inch nor less than two inches shorter than the full height of the fabric with which they are to be used. The stretcher bars shall be arranged for attaching the fabric to all terminal posts by threading through the fabric, by bands, or by other positive mechanical means. One stretcher bar shall be provided for each gate and end post, and two for each corner and pull post.

101.7.1.7 Ties, Clips, Bands: Ties or clips of adequate strength shall be provided in sufficient number for attaching the fabric to all line posts at intervals not exceeding 15 inches. Bands or clips of adequate strength shall be provided in sufficient number for attaching the fabric and stretcher bars to all terminal posts at intervals not exceeding 15 inches. Tension bands and brace bands shall be formed from flat or beveled steel and shall have a minimum thickness of 0.155-0.005 after galvanizing with a minimum width of 7/8 of an inch 0.015.

101.7.1.8 Barbed Wire: Barbed wire shall consist of two strands of 12-1/2 gauge wire with 14 gauge 4 point barbs spaced approximately 5 inches apart. All wire shall be zinc coated with a minimum coating of 0.80 ounces per square foot of surface area on 12-1/2 gauge wire and 0.60 ounces per square foot of surface area on 14 gauge wire.

101.7.1.9 Posts, gate frames, rails, and braces shall conform to the dimensions and weights as follows:

Use & Section	Outside Diameter Or Dimensions Nominal	Weight Per Foot Nominal
End, corner and pull posts (tubular) for fabric heights: 6 feet and less: Round Sch-40	2.375	3.65
Square	2.00	3.60
Gate posts for nominal width of gate, single, or one leaf of double: 6 feet and less: Round Sch-40	2.875	5.79
Square	2.50	5.70
Gate width 13 feet and less: Round Sch-40	4.00	9.10
Square	3.00	9.10
Gates: exterior frames for fabric heights: 6 feet and less, and gate leafs 8 feet and less: Round Sch-40	1.660	2.27
Square	1.50	1.90
Gate leafs over 8 feet width: Round Sch-40	1.90	2.72
Square	2.00	2.10
Internal gate bracing: Round Sch-40	1.660	2.27
Square	1.50	1.90
Rails and post braces (tubular): Round Sch-40	1.660	2.27
Intermediate posts for fabric heights: 6 feet and less: Tubular (round) Sch-40	1.90	2.72
H-Section	1.875x1.625x.113	2.70

102 INSTALLATION PROCEDURES

102-1 Trenching, Bedding, Backfilling, and Compacting:

102.1.1 Materials:

102.1.1.1 Earth Backfill: Earth backfill shall be earth previously excavated from the trench, free from perishable matter, frozen soil, stone over four (4) inches in its largest dimension, and other matter liable to become unstable when saturated with water and compacted.

102.1.1.2 Select Backfill: Where previously excavated earth is determined to be unsuitable for backfill, suitable material from an approved source shall be obtained.

102.1.2 Construction:

102.1.2.1 Trench Excavation (Gravity Sewer Lines):

(a) All trench excavation shall be made with a sufficient working space to permit the placement, inspection, and completion of all work contemplated in the contract. Excavated material that is unsuitable for backfill, and all boulders exposed by trenching shall be removed from the work area. Trenches shall be excavated in accordance with the standard detail for trench width relative to trench depth.

(b) Trenches shall be excavated to six inches below established flow lines to provide clearance for the pipe bell and not less than four inches of granular stone bedding material. Should the trench be excavated more than six inches below the flowline, only granular stone bedding material shall be used to establish flow line grade.

(c) Trench excavation shall, in all cases, be continuous from the ground surface to the established trench depth. Materials excavated shall be stockpiled at the sides of the trench and within established area limits so as to minimize inconvenience to the public, and damage to vegetation and structures in the area.

(d) When unstable ground is encountered, the trenching shall be carried out utilizing trench shoring, bracing, and shields to prevent cave-ins.

(e) Trench width from six inches below the bottom of the pipe to six inches above the pipe joint shall be held to 24" minimum, or 1.4 times the pipe O.D., plus 12 inches, whichever is greater. Trench width above these levels may be wider to accommodate shoring, bracing, and shields, but shall be kept within practical limits.

102.1.3 Trench Excavation (Pressure Sewer Lines):

102.1.3.1 Trench Depth: Trenches shall be cut as deep as necessary on either side of natural depressions, ditches, waterways, etc. to provide for not less than 42 inches of cover over the top of the pipe. Depth of cover shall be measured from the outside top of the pipe vertically to the original ground surface or pavement surface. Mounding over the trench to attain the specified cover shall not be permitted. Trenches shall be cut so as to prevent high spots that could lead to "air binding" of

the line. Trenches shall be excavated to four (4) inches below the bottom of the pipe to provide clearance for not less than four (4) inches of pipe bedding material. The maximum degree of deflection, either vertical or horizontal, shall not cause a pipe joint's annular clearance in the bell to be less than one-fourth (1/4) inch at its closest point. In case the trench be excavated at any place more than four (4) inches below grade, it shall be filled to the design grade with approved bedding material. Trench excavation shall, in all cases, be continuous from the ground surface to the established trench depth. Gutters and ditches shall be kept clear, or other satisfactory provisions shall be made to facilitate drainage. Ground adjacent to trench shall be graded so as to prevent water from flowing into the trench. Provisions shall be made for the continuous flow of all waterways, ditches, drains, or sewers encountered during construction. All ditches and waterways shall be restored to their original conditions as soon as possible.

102.1.3.2 Trench Width: The width of the trench, as dug, from the trench bottom to the top of the pipe, shall not exceed the outside diameter of the pipe bell or socket plus 12 inches, or 24 inches, whichever is greater. Trench width above the top of the pipe shall be as required by field conditions to prevent sliding and caving of the excavation.

102.1.4 Sheeting, Shoring, or Bracing: Sheeting, shoring, or bracing shall be placed wherever necessary for the proper preserving of any excavation, embankment, or structure. Where the ground is of such a character or other conditions are such as to render it necessary, the sheeting shall be closely driven and to such depth below the lowest point of the final excavation as may be required. Shore up, protect, and insure from injury all buildings, retaining walls, piers and footings, storm sewers, sanitary sewers, gas lines, water lines, fences, curbs, trees, or other property liable to be injured during the process of the work. Sheeting, shoring, and bracing shall be provided, installed, and maintained to protect the excavation and insure open trench operations.

102.1.5 Placement of Bedding Material: Granular Stone Pipe Bedding: Granular stone shall be placed in the trench and shaped so as to provide uniform support for the bottom quadrant of the pipe barrel. The bedding shall be not less than four (4) inches in thickness. Following placement of the pipe, the trench shall be filled with granular stone bedding material to a minimum compacted depth of six (6) inches above the pipe barrel.

102.1.6 Backfilling: Material used for backfilling of trenches shall be free from perishable matter and from other material liable to become unstable when saturated with water after having been compacted. No frozen material shall be used in backfill. Care shall be taken to prevent damage to the pipe and structures. Special precautions shall be taken in backfilling over pipes. No backfill shall be placed over any portion of pipes and/or joints not inspected by the City or the City Engineer. The bedding material shall be brought to a depth of at least six inches over the top of the pipe bell, with this material carefully deposited in uniform layers not exceeding six inches in depth, and each layer carefully and solidly tamped with mechanical tampers in such a manner as to avoid damage to pipe or disturbing completed work. Unless noted otherwise on the drawings, backfilling for the remainder of the trench shall be previously excavated gravel, sand, or earth, and shall contain no stone over four inches in its largest dimensions. Stones smaller than that size may be used in proportion not exceeding one part of stone and three parts of earth in any place. This backfilling shall be deposited and spread in layers and solidly tamped. Except as specified for roadway crossings, trench backfill shall be compacted to 85 percent

of the maximum density at optimum moisture. As the trenches are backfilled, remove all surplus material and regrade the surface, leaving it in good order. The trenches shall be filled to the ground surface elevation which previously existed.

102.1.7 New Manhole Over an Existing Line: Manholes to be located over an existing sewer line will be built so that all of the manhole inverts will be smooth and continuous after the sewer tile is broken open.

102.1.8 Connections to Existing Manholes: Existing manholes used for connecting new sewer lines to the existing sewerage system will have the invert chipped out and grouted back with non-shrink grout as required to facilitate the uninterrupted sewage flow from the new connection.

102-2 Installation:

102.2.1 Pipe Installation:

102.2.1.1 General: Only workers competent at laying pipe shall be employed on this phase of the work, and complete suitable equipment necessary for the execution of same is required. Any incompetency observed must be removed, and where improper equipment or lack of same appears to be impairing the quality or speed of the work, such adjustment in same shall be made.

102.2.1.2 Handling of Materials: The pipe, fittings and valves shall be placed in the trench with care. Under no circumstances shall pipe or other materials be dropped or dumped into the trench. If plastic pipe is used, the pipe shall be snaked into the trench, either employing the natural snaking tendency of some plastic pipe or the pipe shall be laid from one side to the other on alternate lengths.

102.2.1.3 Pipe Cleaning During Laying Operations: The pipe, if furnished from the factory with dust covers over the ends, shall be examined carefully during laying operations to insure that such covers are not lost inside the pipe. At the termination of pipe laying, the open end of the pipeline shall be closed off by a suitable cover until laying operations are resumed. No pipe shall be placed in the trench unless it is intended to make the joint to the pipeline at that time.

102.2.1.4 Inspection of Materials During Construction: Any materials not meeting the specifications, or obviously faulty material, shall be rejected and removed from the job site.

102.2.1.5 Joining Pipe: In joining sections of pipe, the installer shall use good working practices. All pipe ends shall be cleaned thoroughly inside and out before application of lubricant. The recommendations of the manufacturer of the pipe shall be followed closely in joining this type of pipe. Care shall be taken in lowering pipe into the trench in order that a tensile stress is not created that would cause partial or complete separation of the joints. Concrete thrust blocks shall be installed on pressure sewer line construction at all bends, tees, crosses, and reducers.

102.2.1.6 Breaks in Pipe and Joints: Breaks in the pipe or joints shall be repaired.

102.2.1.7 Bedding of Plastic Pipe: The Contractor shall bed the pipe in accordance with the requirements of Section 102-1 - TRENCHING, BEDDING, BACKFILLING, AND COMPACTING.

102.2.1.8 Avoidance of Unnecessary Bends: Excessive bends in the alignment of pressure sewer lines will not be permitted. Where obviously required, sweep ells shall be used in making connections between two sections having differing alignment. Standard 90E elbows are not to be used, except in confined locations.

102.2.1.9 All gravity sewers shall have a uniform slope between manholes, straight alignment between manholes for lines of 24" in diameter or less, and shall be checked for alignment with a laser beam or lamping.

102.2.2 Anchorage of Pressure Sewer Line Bends, Tees, and Plugs: On all pipe lines four inches (4") in diameter and larger, all tees, plugs, caps, and bends exceeding 22-1/2± degrees shall be restrained. Mechanical joint restraints, such as a retainer gland, restraint harness, etc. shall be used. Concrete thrust blocks will not be allowed.

102.2.3 Separation of Sewer and Water Lines:

102.2.3.1 Horizontal Separation: When sanitary sewers are to be laid parallel to existing potable water lines, it will be necessary to maintain at least ten feet horizontal separation between the sewer and water lines. The distance shall be measured between outside edge of lines. In cases where it is not practical to maintain this specified separation, the City may allow installation of a sewer line closer to a water line, provided that the water main is located in a separate trench or on an undisturbed earth shelf located on one side of the sewer at such an elevation that the bottom of the water main is at least 18 inches above the top of the sewer.

102.2.3.2 Vertical Separation (Crossings): Sewer lines crossing water mains shall be laid to provide a minimum vertical distance of 18 inches between the outside of the water main and the outside of the sewer. This separation shall be provided whether the water main is above or below the sewer. The crossing shall be constructed such that the sewer joints will be equidistant and as far as possible from the water main joints. Where a water main crosses under a sewer, adequate structural support shall be provided for the sewer to prevent damage to the water main.

102.2.3.3 Special Conditions: When it is impossible to obtain the horizontal and vertical separations specified herein, either the sewer or water line shall be designed and constructed equal to water pipe or may be continuously encased or enclosed in a watertight carrier pipe or concrete. In each case the carrier pipe or encasement shall extend ten feet (10') on both sides of the crossing, measured perpendicular to the water main. The carrier pipe shall be materials approved by the City for use. The sewer pipe shall be pressure tested in accordance with paragraph 3.6 of Section 102-3 of this specification.

102.2.4 Stream Crossings:

102.2.4.1 Location of Sewer in Streams: The top of all sewers entering or crossing streams shall be at a sufficient depth below the natural bottom of the stream bed to protect the sewer line. In general, one foot (1') of cover is required where the sewer is located in rock and three feet (3') of cover is required in other material in major streams more than three feet (3') of cover may be required. In paved stream channels, the top of the sewer line should be placed below the bottom of the channel pavement.

102.2.4.2 Construction and Materials: Sewers entering or crossing streams shall be constructed of ductile iron pipe with mechanical joints or concrete encased; otherwise, they shall be constructed so they will remain watertight and free from changes in alignment or grade. Material used to backfill the trench shall be stone, coarse aggregate, washed gravel, or other materials which will not readily erode, cause siltation, damage pipe during placement, or corrode the pipe. Construction methods that will minimize siltation and erosion shall be employed. Such methods shall provide adequate control of siltation and erosion by limiting unnecessary excavation, disturbing or uprooting trees and vegetation, dumping of soil or debris, or pumping silt-laden water into the stream. Exposed areas shall not remain unprotected for more than seven (7) days.

102.2.5 Aerial Crossings: Aerial crossing of sewers shall be avoided, but if approved, shall be in accordance with Section 10 CSR 20-8.120(9) of the Design Guide.

102-3 Testing:

102.3.1 Gravity Sewer Testing:

102.3.1.1 General: All completed gravity sewers shall require pneumatic or hydrostatic testing for the purpose of locating potential infiltration and/or exfiltration within the system. Sewer service lateral lines shall be excluded from testing requirements.

102.3.1.2 Pneumatic Testing Procedure: Performance of low pressure air testing on all sections of completed sewer 8-inch through and including 24-inch diameters, shall be conducted in the presence of the City or City Engineer. It will be the responsibility of the Contractor to furnish and operate equipment capable of making the required tests. Pneumatic plugs shall be utilized to isolate sewer sections for testing. Plugs shall have a sealing length equal to or greater than the diameter of the pipe to be inspected. Pneumatic plugs shall resist internal test pressure without requiring external bracing or blocking. All air used shall pass through a single control panel and three individual hoses shall be used for connections from the control panel to: 1) pneumatic plugs for inflation; 2) sealed line for introducing the low pressure air; and 3) to the sealed line for continually monitoring the air pressure rise in the sealed line. Equipment shall be Cherne Air-Loc equipment or approved equal. Testing methods and air leakage rates shall conform to ASTM F1417, latest revision, as a minimum. Otherwise, the following procedures shall be followed:

102.3.1.3 Pipe Above Groundwater Table: All pneumatic plugs shall be seal-tested before being used in the actual test installation. One length of pipe shall be laid on the ground and sealed at both ends with the pneumatic plugs to be checked. Air shall be introduced into the plugs to 25 psig. The sealed pipe shall be pressurized to 5 psig. The plugs shall hold against this pressure without bracing and without movement of the plugs of the pipe. After a manhole to manhole reach of pipe has been backfilled and cleaned and the pneumatic plugs are checked by the above procedure, the plugs shall be placed in the line at each manhole and inflated to 25 psig. Low pressure air shall be introduced into this sealed line until the internal air pressure reaches 4 psig greater than the average back pressure of any groundwater that may be over the pipe. At least two minutes shall be allowed for the air pressure to stabilize. After the stabilization period (3.5 psig minimum pressure in the pipe), the air hose from the control panel to the air supply shall be disconnected. The portion of line being tested shall be termed "Acceptable" if the time required in

minutes for the pressure to decrease from 3.5 to 2.5 psig shall not be less than the time shown for the given diameters in the following table:

Pipe Diameter In Inches	Minimum Time (min., sec.)	Max. Length (ft.) for Min. Time	Time (sec.) for Longer Length (L)
4	3:46	597	0.380 L
6	5:40	398	0.854 L
8	7:34	298	1.520 L
10	9:26	239	2.374 L
12	11:20	199	3.418 L
15	14:10	159	5.342 L
18	17:00	133	7.692 L
21	19:50	114	10.470 L
24	22:40	99	13.674 L
27	25:30	88	17.306 L
30	28:20	80	21.366 L
33	31:10	72	25.852 L
36	34:00	66	30.768 L

102.3.1.4 Pipe Below Groundwater Table: In areas where groundwater is known to exist, install a one-half inch diameter capped pipe nipple, approximately 10" long, through the manhole wall on top of one of the sewer lines entering the manhole. This shall be done at the time the sewer line is installed. Immediately prior to the performance of the test, the groundwater shall be determined by removing the pipe cap, blowing air through the pipe nipple into the ground so as to clear it, and then connecting a clear plastic tube to the nipple. The hose shall be held vertically and a measurement of the height in feet of water over the invert of the pipe shall be taken after the water has stopped rising in this plastic tube. The height in feet shall be divided by 2.3 to establish the pounds of pressure that will be added to all readings. (For example, if the height of water is 11-1/2 feet, then the added pressure will be 5 psig. This increases the 3.5 psig to 8.5 psig, and the 2.5 psig to 7.5 psig. The allowable drop of one pound and the timing remain the same.)

102.3.2 Testing of Manholes:

102.3.2.1 Vacuum Testing: Vacuum infiltration/exfiltration tests of all manholes shall be done in the presence of the City, to demonstrate that the manholes are free of leaks. And exfiltration or infiltration test shall be performed with a minimum positive head of two feet.

(a) The vacuum "test head" assembly shall be placed inside the frame of the manhole cover, in order to include in the test the seal between the frame and the manhole cone section, slab, or adjusting rings.

(b) Plugs shall be placed at least eight inches inside all pipes entering the manhole. Location of plugs shall be such that when inflated, they are past the gasket seal or joint of the manhole and sewer pipe. All plugs shall be braced sufficiently to prevent the plug or pipe from becoming dislodged and drawn into the manhole.

(c) A vacuum of at least 10½ inches mercury shall be drawn on the manhole. The valve on the vacuum line to the manhole shall be closed, and the vacuum line disconnected. The vacuum within the manhole shall then be adjusted

to 10 inches to mercury by opening the vacuum line valve.

(d) A liquid-filled pressure gauge having a face of 3½ inches and reading from zero to 30 inches of mercury shall be utilized.

(e) The time for the vacuum reading to drop from 10 inches of mercury to 9 inches of mercury must be equal to or less than the following values in order for the manhole to be considered as passing the vacuum test.

Manhole Depth	Time (minutes)
10 feet or less	2.0
10.1 feet to 15 feet	2.5
15.1 feet to 25 feet	3.0

(f) If vacuum drops less than one inch mercury within the test time, the manhole is considered acceptable and passes the test. If manhole fails and leaks, the contractor shall make the needed repairs and test again until satisfactory results are obtained. Test may be done before backfilling, but shall be repeated after backfill.

(g) All safety procedures, placing of plugs, and bracing, labor, and other work required for testing will be the responsibility of the contractor.

102.3.3 Infiltration/Exfiltration Allowance: Infiltration or exfiltration for sewers shall not exceed 100 gallons per inch of pipe diameter per mile per day for any section of sewer (gal/in of pipe diameter/mi/day) for any section between manholes of the system. Infiltration or exfiltration for manholes shall not exceed 1.14 gallons per day per vertical foot of manhole.

102.3.4 Infiltration/Exfiltration Elimination: The Contractor shall locate all sources of infiltration and exfiltration in the sewer lines, manholes, and appurtenances, and shall correct deficiencies and eliminate infiltration/exfiltration sources in a manner approved by the City Engineer. All sections of sewer line, manholes, and appurtenances shall be re-tested after corrections are finalized.

102.3.5 Deflection Test: The rules of the Department of Natural Resources, State of Missouri, 10 CSR 20-8.120 (H)5, state that a deflection test shall be performed on all flexible pipe not less than thirty days after the placement of final backfill. The deflection test shall consist of hand-pulling a rigid ball or mandrel through the installed pipe in the presence of the City Engineer. The rigid ball or mandrel shall have a diameter equal to 95 percent of the inside diameter of the pipe. If the rigid ball or mandrel fails to pull through the pipe, the section being tested fails the test and will be replaced.

102.3.6 Pressure Sewer Testing:

102.3.6.1 All piping that is to convey liquid under pressure shall be hydrostatically tested in conformance with Section 4 of ANSI/AWWA C600, latest revision. Testing shall include both a "pressure test" of at least two hours duration for the purpose of blowing defective joints, and a "leakage test" to determine actual loss of water from the system. The use of compressed air for testing pipe shall not be permitted. During the pressure test, the piping shall be subjected to a hydrostatic pressure equal to 150 percent of the maximum operating pressure in the system, or

75 psi, whichever is greater.

102.3.6.2 Adequately plug and brace, as necessary, the ends of the pressure sewer, whether they be at the lift station or at the discharge manhole, to allow for the hydrostatic testing.

102-4 Roadway Surface Replacement:

102.4.1 All roadway surfaces removed during sewer line construction shall be replaced with a minimum of 6 inches of concrete. Asphalt repairs will only be allowed when the City receives a written request and the City gives written approval. The Contractor shall be responsible for determining the nature and thickness of all pavement and surfacings to be cut and replaced, including any base courses. Concrete pavement, asphaltic pavement, macadam pavements, crushed stone, and any type of roadway surface, whether public or private, which is cut or damaged during construction of the project shall be replaced so as to conform to the lines and grades of the original roadway surface, and shall be of a quality, thickness, and appearance equal to or better than that of the roadway as it existed prior to construction.

102.4.2 Existing paving shall be cut vertically and horizontally to straight lines. The trench shall be backfilled full depth with granular stone material compacted to 95 percent of maximum density, to an elevation level with the existing riding surface of the roadway. This level shall be maintained by the Contractor until all secondary settling has occurred. Any crushed stone required to maintain the trenches in a suitable condition for traffic during this period shall be furnished at the Contractor's expense. When the trench has been properly backfilled and has settled sufficiently to permit final repairs, roadway surfacing shall be applied according to this specification. At the time of final repairs, the Contractor shall remove sufficient material to allow placement of roadway surfacing to the thicknesses specified above.

102.4.2.1 Granular stone backfill shall meet the gradation requirements specified in Paragraph 101.5 of this Division.

102.4.3 Crushed Stone: Trenching along or across unpaved roadways, including county roads, and city streets, as well as dirt, or gravel shoulders of paved streets, roads, or highways, shall be backfilled with granular stone material in compliance with these specifications. The trench shall be backfilled to a level with the existing riding surface of the roadway. When the trench has been properly backfilled and has settled sufficiently to permit final repairs, the backfill shall be removed as necessary for crushed stone surfacing. The crushed stone surfacing shall be as set forth in Section 501-4 of these specifications, and shall be rolled and thoroughly compacted in layers to a minimum finished thickness of 6 inches.

102.4.4 Concrete, Asphaltic Concrete, and Chip and Seal: Pavement surfaces, including private drives, shall be replaced with concrete surfacing equal to the thickness of existing pavement, plus a minimum of 2 inches. Concrete shall have a minimum 28-day compressive strength of 3500 psi. Total thickness of concrete shall be a minimum of 6 inches.

102-5 Clean-up:

102.5.1 After completion of any portion of work, the construction area shall be cleaned of all surplus material, earth, rubbish, etc. and left in as near the original state as possible. All ditches and drainage shall be restored to their original condition.

102.5.2 All grassed areas shall be seeded, fertilized, and mulched as required to restore the area to a condition equal to that which existed prior to construction.

102-6 Highway, Railroad, and Stream Crossings:

102.6.1 Where designated on the approved design drawings, underground highway and railroad crossings shall be installed. Such installations shall be accomplished by tunneling, boring, or jacking methods. Each method shall provide for removal of earth and rock encountered during installation of the carrier and casing pipes. Where jacking or tunneling are utilized, the annular space between the casing and earth shall be pressure grouted with neat cement grout.

102.6.2 Highway crossings shall be made in strict compliance with Missouri Department of Transportation requirements. No highway crossings shall be installed without the Contractor first obtaining all necessary permits from the Missouri Department of Transportation.

102.6.3 Railroad crossings shall be made in strict compliance with railroad company requirements. No railroad crossings shall be made without the Contractor first obtaining all necessary permits from the railroad company.

102.6.4 Installation of stream crossings shall be as shown on the standard details. Where trenching is utilized to install stream crossings, backfilled stream banks shall be protected from erosion by placement of stone riprap. Stream crossings shall be in accordance with Section 102-2 of this specification.

102.6.5 The Contractor shall insure that traffic interruptions are minimized during the underground excavation operations. After the operation is completed, the Contractor shall slide the sewer pipe in place. The pipe shall be supported by PSI Ranger II non-metallic casing spacers, as manufactured by Pipeline Seal and Insulator, Inc. or an approved equal. Casing spacers shall be spaced a maximum of eight (8) feet apart along the length of the carrier pipe with one casing spacer within two (2) feet of each side of a pipe joint. Wood skids are not an acceptable method of supporting the carrier pipe. Once the carrier pipe has been fixed, the annular space at each end of the casing pipe shall be sealed by installing 1/8" thick synthetic rubber end seal, PSI Model "C", as manufactured by Pipeline Seal and Insulator, Inc., or an approved equal.

102.6.6 The Contractor shall take precautions to insure that the sewer pipe is on line and grade following the installation operation.

102-7 Pumping Station Chain Link Fences and Gates

102.7.1 Line posts for pumping station fence shall be spaced at intervals not to exceed 10 feet average when measured from center to center between terminal posts. In general in determining the post spacing, measurement will be made parallel to the slope of the natural ground, and all posts shall be placed in a vertical position. All posts shall be set in holes of diameter and depth as follows:

Type of Post	Fabric Height	Hole Dia. At Top	Hole Depth	Post Embedment
Line	6'-12'	9"	38"	36"
Terminal	6'-12'	12"	38"	36"

102.7.2 After the post has been set and plumbed, the hole shall be filled with fill concrete. The exposed surface of the concrete shall be crowned to shed water.

102.7.3 Where solid rock is encountered without an overburden of soil, line posts shall be set a minimum depth of 12 inches, and end, corner, gate and pull posts a minimum of 18 inches into the solid rock. The hole shall have a minimum width one inch greater than the largest dimension of the post section to be set.

102.7.4 After the post is set and plumbed, the hole shall be filled with grout consisting of one part Portland cement and three parts clean, well graded sand. Other grouting materials may be used if approved by the City in writing in advance. The grout shall be thoroughly worked into the hole so as to leave no voids. The grout shall be crowned to carry water from the post.

102.7.5 Where solid rock is covered by an overburden of soil or loose rock, the posts shall be set to the full depth unless the penetration into solid rock reaches the minimum depths specified above, in which case, the depth of penetration may be terminated. Concrete footings shall be constructed from the solid rock to the top of the ground. Grouting will be required on the portion of the post in solid rock.

102.7.6 End, corner, gate and pull posts shall be braced to the nearest post with a horizontal galvanized pipe brace used as a compression member, and a galvanized 3/8-inch steel truck rod and trust tightener used as a tension member. All members in direction of fence line of 30 degrees or more shall be considered as corners. Pull posts shall be used at all abrupt changes in grade.

102.7.7 Barbed wire support arms shall be placed on the side of the fence as designated by the Owner or his representative.

102.7.8 The fabric shall be stretched taut approximately two (2) inches above the ground, and securely fastened to the posts. The fabric shall be cut and each span shall be attached independently at all terminal posts. Fastening to terminal posts shall be with stretcher bars and fabric bands spaced at 15-inch intervals maximum. Fastening to line post shall be with tie wire, metal bands, or other approved methods, attached at maximum 15-inch intervals. The top edge of the fabric shall be fastened to the top rail with wire ties at intervals not exceeding 24 inches. The bottom edge of fabric shall be fastened to the bottom tension wire with wire ties at intervals not exceeding two feet.

102.7.9 Rolls of wire fabric shall be joined by weaving a single strand into the ends of the rolls to form a continuous mesh.

DIVISION 200

CONSTRUCTION MATERIALS AND METHODS

FOR

POTABLE WATER SYSTEM

201 MATERIALS

201-1 Water Distribution Line shall be PVC or ductile iron pipe meeting the following specifications: All pipes, fittings, and appurtenances shall contain less than 0.25 percent lead calculated by weighted average.

201.1.1 PVC pipe shall be solid wall meeting the requirements of ASTM D2241, latest revision, with minimum wall thickness SDR 21 (Class 200) or thicker wall, as called for on the drawings. All pipe must bear the National Sanitation Foundation seal for potable water pipe. Pipe shall have an integral bell with a locked-in, solid cross section elastomeric gasket that meets the requirements of ASTM F477, latest revision. Provisions must be made for contraction and expansion at each rubber ring bell and spigot joint. Pipe shall be made from clean, virgin, NSF approved PVC material conforming to ASTM D1784, latest revision.

201.1.1.1 SDR 21 PVC pipe shall be suitable for use at maximum hydrostatic pressures of 200 PSI at 73°F.

201.1.1.2 Physical and Chemical Tests: Pipe shall meet the following physical and chemical test requirements. All physical and chemical tests shall be conducted at 73°F ±3.6°F.

Test	ASTM Ref.	Requirements
Quick Burst Test	D1599	630 PSI applied in 60 to 70 sec.
Sustained Pressure Test	D1598	1000 hrs. @ 420 PSI
Acetone Immersion Test	D2152	No visible spalling or cracking after 20 minutes
Vise Test	--	No splitting or shattering when compressed 60% in 2 to 5 minutes

201.1.2 Ductile iron pipe for 3-inch through 12-inch size shall be pressure class 350 and shall conform to the latest revision of ANSI A21.51 - (AWWA C151) Standard for Ductile Iron Pipe Centrifugally Cast in Metal Molds or Sand Lined Molds, for Water or Other Liquids. The pipe shall be standard asphaltic varnish coated on the outside. Pipe shall be cement mortar lined in conformance with ANSI A21.4-90 (AWWA C104) unless specified otherwise.

201.1.2.1 Joints for ductile iron pipe that is to be buried shall be push-on type consisting of a single neoprene gasket which are acceptable are "Tyton" as manufactured and licensed by the U.S. Pipe and Foundry Company' "Fastite" as manufactured and licensed by the American Cast Iron Pipe Company; and "Bell-Tite" as manufactured and licensed by James B. Clow and Son, Inc. All required joint materials including the neoprene gasket and the lubricant shall be furnished with the pipe.

201.1.3 Water Line Fittings: Fittings to be used with water distribution lines larger than 4 inches in diameter shall have the same pressure rating as the pipe used and be either gray iron or ductile iron, and shall conform to the requirements of ANSI/AWWA C110/A21.10 or C153/A21.53, latest revisions. All mechanical joint fittings shall be pressure class 350 ductile iron. Fittings shall be standard asphaltic varnish coated on the outside. Fittings shall be cement mortar lined in conformance with ANSI A21.4

(AWWA C104), latest revision. Fittings shall be mechanical joint or push-on joint and shall meet all applicable requirements of ANSI 21.11 (AWWA C111), latest revision.

201.1.3.1 Fittings for water distribution lines four (4) inches in diameter and smaller shall be of the same material and pressure rating as that of the pipe.

201-2 Water Service Line & Appurtenances: Water service line shall be solvent weld PVC pipe or polyethylene tubing meeting the following specifications:

201.2.1 PVC pipe for water service lines shall be solvent weld PVC pressure pipe, Schedule 80, meeting the requirements of ASTM D1785, latest revision. All pipe shall bear the National Sanitation Foundation seal for potable water pipe. Pipe shall be made from clean, virgin, NSF approved material conforming to ASTM D1784, latest revision. All connections shall be joined by primer and PVC solvent cement conforming to ASTM D2564, latest revision.

201.2.2 Polyethylene Service Line: Shall be polyethylene tubing, minimum 1" diameter, PE2406, Class 160, IDR 7, conforming to AWWA C901, latest revision.

201.2.3 Service Saddles: Shall be a full circle brass saddle suitable for installation on PVC or DIP pipe. The outlet shall be 1" minimum.

201.2.4 Corporation stops shall be designed and manufactured to conform to AWWA Standard C800-84, and shall be designed to withstand working pressures up to 250 PSI.

201.2.4.1 Inlet Threads: Shall be AWWA Standard thread.

201.2.4.2 Outlet Threads: Shall be suitable for water service line subject to approval of the City Engineer.

201.2.5 Water Service Meters and Appurtenances:

201.2.5.1 Water Meters: Shall be purchased from the City. Each new service connection shall be individually metered.

201.2.5.2 Coppersetters: Shall be provided for each water service meter. Coppersetters shall have a brace eye for installation of a cross-brace. Coppersetters shall have inlet and outlet compatible for the size and type of water service line. An inverted key valve with padlock wings shall be provided at the meter inlet, and a dual angle check valve shall be provided at the meter outlet. In lieu of coppersetters, the City may approve the use of a fabricated setter of equal performance.

201.2.5.3 Meter Pits and Covers: Meter pits shall be ribbed and of Type 1, Grade 2 PVC conforming to ASTM D1784, latest revision, reinforced concrete pipe, or PVC Schedule 35. Pit shall be minimum 18" diameter by 24" deep. Flat meter pit covers of cast iron and of the size required to fit the meter pits shall be provided. Covers shall be stamped "Water Meter".

201-3 Valves and Hydrants:

201.3.1 Gate Valve and Box:

201.3.1.1 All gate valves shall be iron body, with mechanical joint restraints, non-rising stem with O-ring gaskets. The valves shall be equipped with a two-inch square operating nut.

201.3.1.2 Gate valves shall conform to AWWA C500 (Metal Seated Gate Valves)

or AWWA C509 (Resilient Seated Gate Valves), latest revisions for design working water pressures of 200 psig for valves 12 inches NPS in diameter or smaller, and 150 psig for valves with diameter 14 inches NPS and larger.

201.3.1.3 Valve Boxes: Valve boxes shall be required for all buried valves, and shall be cast iron. The valve box shall have a round top with open base. A top cover will be provided, marked "water". The valve box shall be of the two-piece screw type with top piece capable of adjustment to final grade.

201.3.2 Fire Hydrants and Appurtenances:

201.3.2.1 Materials:

201.3.2.1.1 Gate Valve and Box: Shall be located adjacent to each fire hydrant for isolation of the hydrant for repairs. Gate valves and boxes shall be as specified in Section 3.1 - GATE VALVE AND BOX.

201.3.2.1.2 Fire Hydrants: Shall meet or exceed requirements set forth in AWWA Standard C502, latest revision. Hydrants shall be dry barrel traffic model with break flange construction. Outlets shall be three-way and as required for the Fire Department's pumper and/or hose sizes and threads. Operating nut shall also be of the type in use by the City. Contractor shall be solely responsible for insuring compatibility of City's equipment and hydrants. Inlet shall be mechanical joint type and main valve size shall be 5¼ inch. Acceptable manufacturer is Mueller.

201.3.2.2 Testing: All fire hydrants shall be flow tested to verify the maximum flow that each fire hydrant can produce with dropping the system pressures below 20 psig. If a throttling mechanism is used, it shall then be set at the maximum flow that will not drop system pressures below 20 psig. The bonnet and nozzle caps of each hydrant should be painted the appropriate color to indicate the hydrants flow class in accordance with local fire authority requirements, based on the results of the flow test.

201-4 Pipe Bedding Material:

201.4.1 Granular Stone: Granular stone pipe bedding material shall be crushed limestone consisting of aggregate particles meeting the requirements of ASTM C-33, latest revision. Embedment material diameter shall be no greater than ½-inch for 4-inch diameter pipe, ¾-inch for 6 and 8-inch diameter pipe, and 1-inch for pipe 10-inches or greater in diameter, 1-inch to No.16 gradation as follows:

	Percent Passing		
Sieve Size	≤4-inch Dia. Pipe	6 thru 8-inch Dia. Pipe	≥10-inch Dia. Pipe
1"			100
3/4"		100	90 - 100
1/2"	100		
3/8"	85 - 100		20 - 55
No. 4	10 - 30	0 - 15	0 - 10
No. 8	0 - 10	0 - 5	0 - 5
No. 16	0 - 5		

201.4.2 Sand: All sand used for bedding shall be clean, graded from fine to coarse, not lumpy or frozen, and free from slag, cinders, ashes, rubbish, or other material that, in the opinion of the Engineer, is objectionable or deleterious. It should not contain a total of more than 10 percent by weight, of loam and clay, and all material must be capable of being passed through a 3/4-inch sieve. Not more than five percent shall remain on a No. 4 sieve.

201-5 Steel Casing Pipe:

Steel pipe for casing at highway and railroad crossings shall conform to AWWA C200 or AWWA C209, latest revision.

201-6 Tracer wire:

201.6.1 All non-metal pipes shall be installed with tracer wire to facilitate future location of pipe. However, tracer wire is not a substitute for accurate as-built plans, GIS mapping, or individual fixture record on each extension or modification of a system.

201.6.2 Tracer wire shall be designed to withstand buried use, expected soil conditions, and provide water proof connection at each splice. All tracer wire for new installation shall be tested before acceptance. Detectable warning tape is not a substitute for tracer wire.

202 <u>INSTALLATION PROCEDURES</u>

202-1 Trenching, Bedding, Backfilling, and Compacting

202.1.1 Trench Excavation:

202.1.1.1 Trench Depth: Trenches shall be cut as deep as necessary on either side of natural depressions, ditches, waterways, etc. to provide for not less than 42 inches of cover over the top of the pipe. Depth of cover shall be measured from the outside top of the pipe vertically to the original ground surface or pavement surface. Mounding over the trench to attain the specified cover shall not be permitted. Trenches shall be cut so as to prevent high spots that could lead to "air binding" of the water line. Trenches shall be excavated to four (4) inches below the bottom of the pipe to provide clearance for not less than four (4) inches of pipe bedding material. Rocks and hard objects larger than one (1) inch in diameter found in the trench shall be removed for a depth of six (6) inches below the bottom of the pipe. The maximum degree of deflection, either vertical or horizontal, shall not cause a pipe joint's annular clearance in the bell to be less than one-fourth (1/4) inch at its closest point. In the case the trench is excavated at any place more than four (4) inches below grade, it shall be filled to the design grade with approved bedding material. Trench excavation shall, in all cases, be continuous from the ground surface to the established trench depth. Gutters and ditches shall be kept clear, or other satisfactory provisions shall be made to facilitate drainage. Ground adjacent to trench shall be graded so as to prevent water from flowing into the trench. Provisions shall be made for the continuous flow of all waterways, ditches, drains, or sewers encountered during construction. All ditches and waterways shall be restored to their original conditions as soon as possible.

202.1.1.2 Trench Width: The width of the trench, as dug, from the trench bottom to the top of the pipe, shall not exceed the outside diameter of the pipe bell or socket plus 12 inches, or 24 inches, whichever is greater. Trench width above the top of the pipe shall be as required by field conditions to prevent sliding and caving of the excavation.

202.1.2 Sheeting, Shoring, or Bracing: Sheeting, shoring, or bracing shall be placed wherever necessary for the proper preserving of any excavation, embankment, or structure. Where the ground is of such a character or other conditions are such as to render it necessary, the sheeting shall be closely driven and to such depth below the lowest point of the final excavation as may be required. Shore up, protect, and insure from injury all buildings, retaining walls, piers and footings, storm sewers, sanitary sewers, gas lines, water lines, fences, curbs, trees, or other property liable to be injured during the process of the work. Sheeting, shoring, and bracing shall be provided, installed, and maintained to protect the excavation and insure open trench operations.

202.1.3 Placement of Bedding Material:

202.1.3.1 Granular Stone Pipe Bedding: Granular stone shall be placed in the trench and shaped so as to provide uniform support for the bottom quadrant of the pipe barrel. The bedding shall be not less than four (4) inches in thickness. Following placement of the pipe, the trench shall be filled with granular stone bedding material to a minimum compacted depth of six (6) inches above the pipe barrel.

202.1.3.2 Sand Pipe Bedding: Sand shall be shaped and placed similar to the granular stone specified above.

202.1.4 Backfilling:

202.1.4.1 Material used for backfilling of trenches shall be free from perishable matter and from other material liable to become unstable when saturated with water after having been compacted. No frozen material shall be used in backfill. Care shall be taken to prevent damage to the pipe and structures. Special precautions shall be taken in backfilling over pipes. No backfill shall be placed over any portion of pipes and/or joints not inspected by the City Engineer. The bedding material shall be brought to a depth of at least six inches over the top of the pipe bell, with this material carefully deposited in uniform layers not exceeding six inches in depth, and each layer carefully and solidly tamped with mechanical tampers in such a manner as to avoid damage to pipe or disturbing completed work. Unless noted otherwise on the drawings, backfilling for the remainder of the trench shall be previously excavated gravel, sand, or earth, and shall contain no stone over ten inches in its largest dimensions. Stones smaller than that size may be used in proportion not exceeding one part of stone and three parts of earth in any place. This backfilling shall be deposited and spread in layers and solidly tamped. Except as specified for roadway crossings, trench backfill shall be compacted to 80 percent of the maximum density at optimum moisture. As the trenches are backfilled, remove all surplus material and regrade the surface, leaving it in good order. The trenches shall be filled to the ground surface elevation which previously existed.

202-2 Installation:

202.2.2 Pipe Installation:

202.2.2.1 General: Only workers competent at laying pipe shall be employed on this phase of the work, and complete suitable equipment necessary for the execution of same is required. Any incompetency observed must be removed, and where improper equipment or lack of same appears to be impairing the quality or speed of the work, such adjustment in same shall be made.

202.2.2.2 The pipe, fittings and valves shall be placed in the trench with care. Under no circumstances shall pipe or other materials be dropped or dumped into the trench. If plastic pipe is used, the pipe shall be snaked into the trench, either employing the natural snaking tendency of some plastic pipe or the pipe shall be laid from one side to the other on alternate lengths.

202.2.2.3 Pipe Cleaning During Laying Operations: The pipe, if furnished from the factory with dust covers over the ends, shall be examined carefully during laying operations to insure that such covers are not lost inside the pipe. At the termination of pipe laying, the open end of the pipeline shall be closed off by a suitable cover until laying operations are resumed. No pipe shall be placed in the trench unless it is intended to make the joint to the pipeline at that time.

202.2.2.4 Inspection of Materials During Construction: Any materials not meeting the specifications, or obviously faulty material, shall be rejected and removed from the job site.

202.2.2.5 Joining Pipe: In joining sections of pipe, the installer shall use good working practices. All pipe ends shall be cleaned thoroughly inside and out before application of lubricant. The recommendations of the manufacturer of the pipe shall be followed closely in joining this type of pipe. Care shall be taken in lowering pipe into the trench in order that a tensile stress is not created that would cause partial or complete separation of the joints. Mechanical joint restraints, such as a retainer gland, restraint, harness, etc., shall be used to restrain bends, tees, crosses, reducers, and other fittings. Concrete thrust blocks shall not be used.

202.2.2.6 Breaks in Pipe and Joints: Breaks in the pipe or joints shall be repaired.

202.2.2.7 Bedding of Plastic Pipe: The Contractor shall bed the pipe in accordance with the requirements of Section 202-1 - TRENCHING, BACKFILLING, AND COMPACTING.

202.2.2.8 Allowance for Expansion: Expansion and contraction of PVC pipe is relatively great. Snake the pipe in the trench or allow in other ways for some expansion or contraction of the pipe.

202.2.2.9 Avoidance of Unnecessary Bends: Excessive bends in the alignment of the pipe will not be permitted. Where obviously required, sweep ells shall be used in making connections between two sections having differing alignment. Standard 90E elbows are not to be used, except in confined locations.

202.2.2.10 Water in Trench: Pipe shall not be laid in a trench containing standing water. A pump(s) and appliances of sufficient capacity shall be furnished and operated by the installer to prevent interference of water, ice, or snow with installation of the pipe. No structure or pipe shall be placed in water, and water shall not be allowed to run into or cover any concrete work or pipe, or into or through any pipe.

202.2.3 Anchorage of Bends, Tees, and Plugs: All tees, plugs, caps, and bends exceeding 22-1/2°± shall be restrained with mechanical joint restraints, such as a retainer gland, restraint harness, etc. Concrete thrust blocks shall not be used.

202.2.4 Water Mains Near Sewers: The requirements for parallel installation and crossings apply to water mains and any existing or proposed line carrying non-potable fluids such as, but not limited to, drains, storm sewers, sanitary sewers, combined sewers, sewer service connections, and process waste or product lines.

202.2.4.1 Horizontal Separation: Water mains shall be laid at least ten feet horizontally from any existing or proposed drain, sewer line, or lines carrying non-potable fluids. The distance shall be measured edge of pipe to edge of pipe. In cases where it is not practical to maintain a ten-foot separation, the department may allow deviation on a case-by-case basis, if supported by data from the design engineer. Such deviation may allow installation of the water main closer to a sewer, provided that the water main is laid in a separate trench or on an undisturbed earth shelf located on one side of the sewer and in either case, at such an elevation that the bottom of the water main is at least 18 inches above the top of the sewer. In areas where the recommended separations cannot be obtained, either the waterline or the sewer line shall be constructed of mechanical joint pipe. Casing pipe must be a material that is approved for use.

202.2.4.2 Vertical Separation: Water mains crossing sewers, storm drains, sanitary sewers, or any non-potable line shall be laid to provide a minimum vertical clear distance of 18 inches between the outside of the water main and the outside of the sewer. This shall be the case where the water main is either above or below the sewer. At crossings, the full length of water pipe shall be located so both joints will be as far from the sewer as possible, but in no case, less than ten feet. Special structural support for the water and sewer pipes may be required. In areas where the recommended separations cannot be obtained, either the waterline or the sewer line shall be constructed of mechanical joint pipe that extends no less than ten feet on both sides of the crossing. Casing pipe must be a material that is approved for use.

202.2.4.3 Unusual Conditions: Where it is necessary for the water main to pass under a sewer line, the water main must be laid with ductile iron pipe, or shall be PVC piping with a steel casing, both of which must extend on each side of the crossing until the normal distance from the water main to the sewer is at least ten feet. In making such crossings, a full length of pipe must be centered over or under the sewer to be crossed so that the joints will be equally distant from the sewer and as remote therefrom as possible, but in no case, less than ten (10) feet. The sewer line must also be constructed of ductile iron pipe with mechanical, compression, or leaded joints until the normal distance from the sewer to the water main is at least ten feet. Where a water main must cross under a sanitary sewer, a vertical separation of at least 18 inches between the bottom of the sewer line and the top of the water main must be maintained with adequate support for the larger size sewer lines to prevent them from settling or their breaking the water main. Where these conditions cannot be met, the Missouri Department of Natural Resources shall be consulted as to the precautions to be taken to protect the public water supply.

202.2.4.4 No water line shall be located closer than ten (10) feet to any part of a sanitary or combined sewer manhole.

202.2.4.5 Force Mains: There shall be at least ten foot horizontal separation between water mains, sanitary sewer force mains and other force mains carrying non-potable fluids, and they shall be in separate trenches. In areas where these separations cannot be obtained, either the water line or the sewer line shall be cased in a continuous casing.

202.2.4.6 Disposal Facilities: No water line shall be located closer than 25 feet to any on-site wastewater disposal facility, agricultural waste disposal facility, or landfill.

202.2.5 Water Mains Near Other Utilities: Water mains shall be located at least 10 feet horizontally from any existing or proposed oil and gas lines, and buried electric lines. In cases where the specified separation of 10 feet cannot practically be maintained, the City may allow deviation on a case-by-case basis, if supported by data from the design engineer. Such deviation may allow installation of the water line closer to existing or proposed utilities, provided that the water line is in a separate trench. Under no circumstances, however, shall a water line be installed closer than 12 inches to other existing or proposed utilities.

202-3 Testing, Flushing, and Disinfecting:

202.3.1 Testing: Installed water lines shall be hydrostatically tested. The test shall be conducted with all meter settings in place and the angle valve closed. Prior to conducting the test, the water line and fittings shall be backfilled. All air shall be expelled from the pipeline prior to the test by use of air release valves, hydrants, or taps. Taps shall be plugged after testing is completed. The test procedure shall be in accordance with the latest edition of AWWA standards and as specified below:

202.3.1.1 Test pressure shall not be less than 1.25 times the stated anticipated maximum sustained working pressure of the pipeline measured at the highest elevation along the test section and not less than 1.50 times the stated sustained working pressure at the lowest elevation of the test section. The duration of the hydrostatic test shall be 2 hours.

202.3.1.2 The pipeline shall be pressurized using a hand or motor-operated pump equipped with a shut-off valve, pressure relief valve, and a gauge located to read the line pressure when the pump valve is closed.

202.3.1.3 At the end of the 2-hour test period, water shall be pumped into the system to bring the pipeline back up to the test pressure. The volume of water required shall be measured with an approved meter or by pumping from a calibrated vessel. The pipe or installation shall not be accepted unless or until the leakage test is conducted. Leakage shall be defined as the quantity of water that must be supplied into the new laid pipe, or ay valved section thereof, to maintain pressure within 5 psi ± of the specified test pressure after the air in the pipeline has been expelled and the pipe has been filled with water.

202.3.1.4 The pipe installation will be accepted if the leakage is less than or equal to that determined by the following formula:

$$L = \frac{SD\sqrt{P}}{148{,}000}$$

In which L is the allowable leakage in gallons per hour; S is the length of pipeline tested in feet; D is the nominal diameter of the pipe in inches; and P is the average test pressure during the leakage test, in pounds per square inch gauge. When testing against closed metal-seated valves, an additional leakage per closed valve of 0.0078 gal/hr/in. of nominal valve size shall be allowed.

202.3.1.5 Any test section not meeting the requirements of this specification shall be repaired and retested until the test requirements are satisfied. Defective pipe, valves, fittings, hydrants, or other appurtenances shall be removed and replaced.

202.3.1.6 The pressure test shall be performed in the presence of the City Engineer or his representative. A written report shall be made by the installer during the test showing the test section, test pressure, test results, and other pertinent data.

202.3.2 Flushing and Disinfecting: The completed water distribution system shall be flushed and disinfected in accordance with AWWA C651, latest revision. The "Continuous-Feed Method" shall be utilized. This method is summarized below:

202.3.2.1 Calcium hypochlorite granules shall be placed in pipe sections during construction. Granules shall be placed at upstream end of the first section of pipe, at the upstream end of each branch main, and at 500 foot intervals. Calcium hypochlorite granules shall <u>not</u> be placed within solvent weld PVC pipe or in screwed joint steel pipe. The following table shows the amount of granules needed based on pipe diameter.

Pipe Dia., in.	Calcium Hypochlorite Granules, oz.
4	1.7
6	3.8
8	6.7
10	10.5
12	15.1
14 and larger	$D^2 \times 15.1$

Where D is the inside pipe diameter in feet D=d/12

202.3.2.2 Prior to disinfection, the completed water line shall be filled and flushed. All air shall be expelled from the pipeline as described in paragraph 3.1 of this specification. The flushing velocity shall not be less than 2.5 feet per second (fps). The following table shows the approximate rates of flow required to produce a velocity of 2.5 fps in pipes of various diameters:

Pipe Dia., In.	Approx. Flow Req'd. To Produce 2.5 fps, GPM
1	10
2	30
3	65
4	105
6	230
8	390
10	620
12	890

202.3.2.3 Potable water from an approved source shall be introduced into the water line at a constant, measured rate. At a point no more than 10 feet downstream from the beginning of the new water line, water entering the line shall receive a dose of one percent chlorine/water solution, fed at a rate such that the water shall have not less than 25 mg/l free chlorine. Measure the chlorine concentration at regular intervals using appropriate chlorine test kits. The following table shows the gallons of one percent chlorine/water solution required per 100 feet of pipe to produce a 25 mg/l concentration in the pipeline:

Pipe Dia., In.	Gallons of 1% Solution Req'd. Per 100 Ft. of Pipe
1	.01
2	.05
3	.11
4	.18
6	.38
8	.65
10	1.02
12	1.47

202.3.2.4 Approximately one pound of liquid chlorine (100% available chlorine) is required for 12 gallons of water to produce a one percent solution. Approximately one pound of calcium hypochlorite (HTH) is required per 8 gallons of water to produce a one percent solution.

202.3.2.5 The chlorinated water shall be allowed to stand in the new water line for at least 24 hours, during which time all valves and hydrants shall be operated. At the end of the 24-hour period, water in all portions of the line shall have a residual of not less than 10 mg/l free chlorine. If a concentration less than 10 mg/l is found after the

24-hour period, the entire disinfection procedure shall be repeated by the Contractor at his expense.

202.3.2.6 Upon satisfactory completion of the disinfection procedure, the heavily chlorinated water shall be flushed from the system until the chlorine concentration throughout the entire system is no higher than ~~one~~ 1 mg/l or the chlorine concentration of the water source. Prolonged chlorinated exposer to the pipe shall be avoided in order to prevent damage to the pipe lining or corrosion damage to the pipe. The environment to which the heavily chlorinated water is to be discharged shall be inspected. If the chlorinated discharge will cause damage to the environment, a neutralizing chemical shall be applied to the water to be wasted to thoroughly neutralize the residual chlorine. Where necessary, federal, state, or local regulatory agencies should be contacted to determine special provisions for the disposal of heavily chlorinated water.

202.3.2.7 After final flushing and filling of the system and prior to placing the system in service, the installer shall arrange with the Missouri Department of Natural Resources for collecting samples for required tests. If bacteriological test results are unsatisfactory, the entire disinfection procedure shall be repeated by the Contractor at his expense. The installer shall be available to assist the Missouri Department of Natural Resources in collecting samples if required.

202-4 Roadway Surface Replacement:

202.4.1 All roadway surfaces removed during water line construction shall be replaced with a minimum of six inches of concrete. Asphalt repairs will only be allowed when the City receives a written request and the City gives written approval. The Contractor shall be responsible for determining the nature and thickness of all pavement and surfacings to be cut and replaced, including any base courses. Concrete pavement, asphaltic pavement, macadam pavements, crushed stone, and any type of roadway surface, whether public or private, which is cut or damaged during construction of the project shall be replaced so as to conform to the lines and grades of the original roadway surface, and shall be of a quality, thickness, and appearance equal to or better than that of the roadway as it existed prior to construction.

202.4.2 Existing paving shall be cut vertically and horizontally to straight lines. The trench shall be backfilled with granular stone material compacted to 95 percent of maximum density, to an elevation level with the existing riding surface of the roadway. This level shall be maintained by the Contractor until all secondary settling has occurred. Any crushed stone required to maintain the trenches in a suitable condition for traffic during this period shall be furnished at the Contractor's expense. When the trench has been properly backfilled and has settled sufficiently to permit final repairs, roadway surfacing shall be applied according to this specification. At the time of final repairs, the Contractor shall remove sufficient material to allow placement of roadway surfacing to the thicknesses specified below.

202.4.2.1 Granular stone backfill shall meet the gradation requirements specified in Paragraph 201-4 of this Division.

202.4.3 Crushed Stone: Trenching along or across unpaved roadways, including county roads, and city streets, as well as dirt, or gravel shoulders of paved streets, roads, or highways, shall be backfilled in compliance with these specifications. The trench shall be backfilled to a level with the existing riding surface of the roadway. When the trench has been properly backfilled and has settled sufficiently to permit final repairs, the backfill shall be removed as necessary for crushed stone surfacing. The crushed stone surfacing shall be as set forth in Section 501-4 of these specifications and shall be rolled and thoroughly compacted in layers to a minimum finished thickness of 6 inches.

202.4.4 Concrete, Asphaltic Concrete, and Chip and Seal: Pavement surfaces, including private drives, shall be replaced with concrete surfacing equal to the thickness of existing pavement, plus a minimum of 2 inches. Concrete shall have a minimum 28-day compressive strength of 3500 psi. Total thickness of concrete shall be a minimum of six inches.

202-5 Clean-up:

202.5.1 After completion of any portion of work, the construction area shall be cleaned of all surplus material, earth, rubbish, etc. and left in as near the original state as possible. All ditches and drainage shall be restored to their original condition.

202.5.2 All grassed areas shall be seeded, fertilized, and mulched as required to restore the areas to a condition equal to that which existed prior to construction.

202-6 Highway and Railroad Crossings: Where designated on the approved design drawings, underground highway and railroad crossings shall be installed. Such installations shall be accomplished by tunneling, boring, or jacking methods. Each method shall provide for removal of earth and rock encountered during installation of the carrier and casing pipes. Where jacking or tunneling are utilized, the annular space between the casing and earth shall be pressure grouted with neat cement grout.

202.6.1 Highway crossings shall be made in strict compliance with Missouri Department of Transportation requirements. No highway crossings shall be installed without the Contractor first obtaining all necessary permits from the Missouri Department of Transportation.

202.6.2 Railroad crossings shall be made in strict compliance with railroad company requirements. No railroad crossings shall be made without the Contractor first obtaining all necessary permits from the railroad company.

202.6.3 The Contractor shall insure that traffic interruptions are minimized during the underground excavation operations. After the operation is completed, the Contractor shall slide the water pipe in place. The pipe shall be supported by PSI Ranger II non-metallic casing spacers, as manufactured by Pipeline Seal and Insulator, Inc. or an approved equal. Casing spacers shall be spaced a maximum of eight (8) feet apart along the length of the carrier pipe with one casing spacer within two (2) feet of each side of a pipe joint. Wood skids are not an acceptable method of supporting the carrier pipe. Once the carrier pipe has been fixed, the annular space at each end of the casing pipe shall be sealed by installing 1/8" thick synthetic rubber end seal, PSI Model "C", as manufactured by Pipeline Seal and Insulator, Inc., or an approved equal.

202-7 Stream Crossings: Where designated on the approved design drawings, underground stream crossings shall be installed. Installation shall be by trenching or longitudinal boring methods.

202.7.1 Carrier pipe shall be of restrained joint SDR21 PVC pipe, Yellowmine with Certa-Lok joints, as manufactured by Certainteed Corporation.

202.7.2 Casing pipe shall be SDR 21 PVC pipe as specified in Section 201-1 of this division.

202.7.3 Installation of stream crossings shall be as shown on the standard details providing a minimum cover of four feet. Where trenching is utilized to install stream crossings, backfilled stream banks shall be protected from erosion by placement of stone riprap.

202.7.4 After the trenching or boring operation is completed, the Contractor shall slide the water pipe in place. The pipe shall be supported by PSI Ranger II non-metallic casing spacers,

as manufactured by Pipeline Seal and Insulator, Inc. or an approved equal. Casing spacers shall be spaced a maximum of eight (8) feet apart along the length of the carrier pipe with one casing spacer within two (2) feet of each side of a pipe joint. Wood skids are not an acceptable method of supporting the carrier pipe. Once the carrier pipe has been fixed, the annular space at each end of the casing pipe shall be sealed by installing 1/8" thick synthetic rubber end seal, PSI Model "C", as manufactured by Pipeline Seal and Insulator, Inc., or an approved equal.

202.7.5 If the stream has permanent flow and the crossing width is greater than 15 feet, the crossing shall be constructed in accordance with the provisions set forth in Section 8.7.2 of the Design Guide for Community Water Systems, published by the Missouri Department of Natural Resources, reproduced as follows:

202.7.5.1 The pipe shall be of special construction, having flexible watertight joints. Steel or ductile iron ball-joint river pipe shall be used for open cut crossings. Restrained joint pipe may be used for open cut crossings, provided it is encased in a welded steel casing. Restrained joint or fusion weld pipe shall be used for bored crossings. Adequate support and anchorage shall be provided on both sides of the stream.

202.7.5.2 Valves shall be provided at both ends of water crossings so that the section can be isolated for testing or repair; the valves shall be easily accessible and should not be subject to flooding; and the valve closest to the supply source shall be in an accessible location.

202.7.5.3 Permanent taps shall be provided on each side of the valve within the manhole to allow insertion of a small meter to determine leakage and for sampling purposes.

202.7.5.4 The stream crossing pipe or casing shall extend at least 15 feet beyond the upper edge of the stream channel on each side of the stream.

202.7.6 If the stream is an intermittent flowing stream, restrained joint pipe shall be used, extending at least 15 feet beyond the upper edge of the stream channel on each side of the stream.

DIVISION 300

CONSTRUCTION MATERIALS AND METHODS

FOR

STORM SEWERS AND APPURTENANCES

STORM SEWERS AND APPURTENANCES 300

301 GENERAL

301-1 Storm sewers shall be a minimum of twelve (12) inches in diameter and of the types specified. All storm sewers that are located beneath the normal driving surface, shall be designed for an HS20 highway load.

302 MATERIALS

302-1 Plastic Pipe: Shall be polyvinyl chloride (PVC) meeting the requirements of ASTM F794, latest revision, or high density polyethylene (HDPE) meeting the requirements of ASTM D1248, latest revision.

302.1.1 Joints: For PVC pipe, all joints shall be rubber gaskets complying with the requirements of ASTM C443, latest revision

302-2 Concrete Pipe: Shall be reinforced concrete pipe, spun or cast type with a smooth finished interior surface. Concrete strength of the pipe shall be in accordance with ASTM specifications C31 and C39, latest revision. All pipe shall pass a 3 edge bearing test as prescribed by ASTM C76, latest revision.

302.2.1 Joints: Shall be O-ring gasket type which will meet all the requirements of ASTM A443 latest revision.

302-3 Corrugated Metal Pipe: Shall be fabricated from iron or steel sheets meeting the requirements of ASTM A444, latest revision. This specification shall cover all fabricated pipe, pipe arches, and structural plate.

302.3.1 Couplers: Shall be corrugated bands of the same material and configuration as the pipe. The couplers shall also meet the requirements of ASTM A444,latest revision.

302-4 Manholes, Junction Boxes, and Inlets:

302.4.1 Manholes, junction boxes, and inlets shall be precast reinforced concrete sections manufactured to the requirements of ASTM C478 - latest revision. All units shall be designed for an H15 highway load.

302.4.2 Castings: All castings shall be made of clean, even grain, tough gray cast iron. The casting shall be smooth, true to pattern, and free from projections, sand holes, warp, and other defects that would interfere with the use of, or impair the serviceability of the casting. All castings shall be well cleaned before enamel coating is applied. The iron used for these castings shall conform to ASTM A48, latest revision, for Class 30 gray iron. The "B" test bar (1.2" diameter by 21" long) shall be used to prove the quality of iron used.

302.4.2.1 Curb Inlets: Shall be heavy duty, two-piece construction, conforming to the shape of the concrete curb and gutter. Grate shall be removable to provide access to the junction box. Minimum size of frame opening shall be twenty-four (24) inches square. Total weight of frame and grate shall be 800 pounds minimum.

302.4.2.3 Drop Inlets: Shall be heavy duty, two-piece construction. Grate shall be removable so as to provide access to the junction box. Minimum size of frame opening shall be twenty-four (24) inches.

302.4.2.4 All grates shall be rated bicycle safe.

302-5 Concrete

302.5.1 Portland Cement: Portland cement shall conform to "Standard Specifications for Portland Cement" ASTM C150, latest revision, Type 1 or Type 1A. One sack of cement shall be considered as one cubic foot of volume or 94 pounds by weight.

302.5.2 Aggregates: Fine and coarse aggregates shall conform to "Standard Specification

for Concrete Aggregate", ASTM C33, latest revision. The nominal maximum size of the coarse aggregate shall not be larger than one-fifth of the narrowest dimension between sides of forms, one-third the depth of the slabs, nor three-fourths of the minimum clear distance between reinforcing bars or between bars and forms, whichever is least. Coarse aggregate gradation shall conform to ASTM C33, latest revision, Size 57.

302.5.3 Water Reducing, Retarding, and Accelerating Admixtures: Water reducing, retarding, and accelerating admixtures shall conform to requirements of ASTM C494, latest revision.

302.5.4 Mixing Water: Mixing water for concrete shall be fresh, clean, and potable. Non-potable water may be used only if it produces mortar cubes having 7- and 28-day strengths equal to the strength of similar specimens made with distilled water, when tested in accordance with "Method of Test for Compressive Strength of Hydraulic Cement Mortars", ASTM C109, latest revision.

302.5.5 Curing Compounds: All curing compounds shall conform to specifications for fluid membrane forming compounds for curing concrete, ASTM C309, latest revision, applied in accordance with manufacturer's recommendations.

302.5.6 Ready-Mixed Concrete: Shall conform to the "Standard Specification for Ready-Mixed Concrete", ASTM C94, latest revision.

302.5.7 Strengths: All structural concrete shall develop a minimum of 4000 psi, 28 day compressive strength. All fill concrete shall develop a minimum of 2500 psi, 28 day compressive strength.

302.5.8 Reinforcing:

302.5.8.1 Steel Reinforcing Bars: Shall conform to ASTM A615, A616, or A617, latest revisions, and shall be Grade 60.

302.5.8.2 Reinforcing Wire: Shall meet the requirements of ASTM A82, latest revision.

302.5.8.3 Welded Wire Fabric: Shall conform to the requirements of ASTM A185 or A497, latest revision.

302-6 Pipe Bedding: Pipe bedding material shall be granular, crushed limestone consisting of aggregate particles meeting the requirements of ASTM C-33, latest revision, gradation 67, 1 inch to No. 8 size, as follows:

Sieve Size	% Passing
1"	100
3/4"	90-100
3/8"	20-55
No. 4	0-10
No. 8	0-5

303 INSTALLATION PROCEDURES

303-1 Trenching:

303.1.1 All excavation in which sewers and appurtenances are to be constructed shall be held to a minimum to accommodate the structure.

303.1.2 All trenches shall be excavated to a minimum of six inches (6") below the bottom of pipe. Bracing, shoring, shields, etc. shall be utilized whenever it is necessary for the preservation of any adjacent structure or for workers' safety.

303.1.3 All excavated material unsuitable for backfill shall be removed from the construction site and properly disposed of. The bottom of the trench shall be brought to true grade using well graded crushed limestone that shall provide even bearing for the full length of the pipe.

303.1.4 Should any trench be over-excavated, only crushed limestone shall be used to bring the trench back to its proper depth.

303.1.5 In all cases from 6 inches below the flowline to 12 inches above the top of pipe, the trench width shall be a maximum of 1.4 x pipe outside diameter plus 16 inches.

303.1.6 Protection of Existing Facilities: All existing facilities (roadway, utilities, foundations, etc.) that are adjacent to the new construction shall be protected and preserved. Should damage occur to an existing facility, it shall be promptly repaired. Where new construction interferes with the operation of an existing facility, the contractor shall make provisions for maintaining continuous service. The contractor shall give reasonable notice to any utility company or to owners of property when it appears damage is possible by the execution of work.

303-2 Pipe Installation:

303.2.1 The pipe shall be laid true to grade using a laser beam or a grade rod with an iron heel for the invert. Should the grade rod be used, a minimum of three (3) batterboards shall be set at the necessary offset. A line shall be drawn taut over the batterboards and the rod shall have a means for measuring from the line to the invert. The alignment of all pipes between manholes or junction boxes shall be true to line and grade, and shall reflect the full bore of the pipe. Each pipe section shall be centered into the adjacent pipe section at each joint. The pipe bell shall not rest on the bedding material. The bedding material shall be excavated at each bell such that the weight of the pipe is distributed evenly along the entire length of the pipe barrel.

303-3 Manhole, Junction Box, and Inlet:

303.3.1 All units shall be set plumb and true to grade. If cast-in-place concrete is used, inverts shall be formed such that it is smooth and flows evenly from inlet to outlet. Should precast units be used, the area shall be over-excavated a minimum of 12 inches. The excavation shall be brought back to grade with neat concrete or granular stone backfill. The unit shall be set to true line and grade while the concrete is still pliable enough to fill any voids under the base. All castings shall be set to true line and grade in a full bed of mortar. Frames and covers shall have a true bearing surface such that they will seat firmly without rocking or shifting.

303-4 Backfilling and Compacting:

303.4.1 Material used for backfilling shall be earth previously excavated from the trench, and shall be free from perishable material, frozen soil, and other material liable to become unstable when saturated with water after having been compacted. No frozen material shall be used in the backfill. Care shall be taken to prevent damage to the pipe and structures. Special precautions shall be taken in backfilling over pipes. No backfill shall be placed over any portion of pipes and/or joints not inspected by the City. Bedding material shall be granular stone, for a depth of at least six inches over the top of the pipe bell. This material shall be carefully deposited in uniform layers not exceeding six inches in depth, and each layer shall be carefully and solidly tamped with mechanical tampers in such a manner as to avoid damage to pipe or disturbing the completed work. Backfilling for the remainder of the trench shall be previously excavated gravel, sand, or earth, and shall contain no stone over ten inches in its largest dimensions. This backfilling shall be deposited and spread in layers and solidly tamped to 80 percent of the maximum density. As the trenches are backfilled, the Contractor shall remove all surplus material and regrade the surface leaving it is good order. The trenches shall be filled to the ground surface elevation which previously existed.

303-5 Roadway Surface Replacement:

303.5.1 All roadway surfaces removed during construction shall be replaced with a minimum of six inches of concrete.. The Contractor shall be responsible for determining the nature and thickness of all pavement and surfacings to be cut and replaced, including any base courses. Concrete pavement, asphaltic pavement, macadam pavements, crushed stone, and any type of roadway surface, whether public or private, which is cut or damaged during construction of the project shall be replaced so as to conform to the lines and grades of the original roadway surface, and shall be of a quality, thickness, and appearance equal to or better than that of the roadway as it existed prior to construction.

303.5.2 General: Existing paving shall be cut vertically and horizontally to straight lines. The trench shall be backfilled with granular stone material compacted to 95 percent of maximum density, to an elevation level with the existing riding surface of the roadway. This level shall be maintained by the Contractor until all secondary settling has occurred. Any crushed stone required to maintain the trenches in a suitable condition for traffic during this period shall be furnished at the Contractor's expense. When the trench has been properly backfilled and has settled sufficiently to permit final repairs, roadway surfacing shall be applied according to this specification. At the time of final repairs, the Contractor shall remove sufficient material to allow placement of roadway surfacing to the thicknesses specified below.

303.5.2.1 Granular stone shall meet the gradation requirements specified in Paragraph 302-6 of this Division.

303.5.3 Crushed Stone: Trenching along or across unpaved roadways, including county roads, and city streets, as well as dirt, or gravel shoulders of paved streets, roads, or highways, shall be backfilled in compliance with these specifications. The trench shall be backfilled to a level with the existing riding surface of the roadway. When the trench has been properly backfilled and has settled sufficiently to permit final repairs, the backfill shall be removed as necessary for crushed stone surfacing. The crushed stone shall be rolled and thoroughly compacted in layers to a minimum finished thickness of 6 inches.

303.5.4 Concrete, Asphaltic Concrete, and Chip and Seal: Concrete surfaces, including private drives, shall be replaced with concrete surfacing equal to the thickness of existing pavement, plus a minimum of 2 inches. Concrete shall have a minimum 28-day compressive strength of 3500 psi.

303-6 Clean-up:

303.6.1 After completion of any portion of work, the construction area shall be cleaned of all surplus material, earth, rubbish, etc. and left in as near the original state as possible. All ditches and drainage shall be restored to their original condition.

303.6.2 All grassed areas shall be seeded, fertilized, and mulched as required to restore the areas to a condition equal to that which existed prior to construction.

DIVISION 400

CONSTRUCTION MATERIALS AND METHODS

FOR

GRADING, SITE, AND SUBGRADE PREPARATION

GRADING, SITE, AND SUBGRADE PREPARATION 400

401 CLEARING, GRUBBING, AND DEMOLITION

401-1 Scope: This section governs the furnishing of all labor, equipment, tools, and materials, and the performance of all work for clearing, grubbing, and demolition wholly, or in any part of locations shown on the plans.

401-2 Materials, Definitions, and Equipment:

401-2.1 Clearing: Clearing shall consist of removing all vegetable matter, such as trees, brush, down timber, rotten wood, rubbish, and other objectionable combustible materials, found on or above the surface of the site. It shall include removing wood buildings, fences, lumber, waste dumps, and trash, and the salvaging of such of the materials as may be specified, and disposing of the debris.

401-2.2 Grubbing: Grubbing shall consist of removing all stumps, roots, buried trees and brush, wood piling, wood curb planking, wood culverts, wood catch basins and drains, and wood stairs appearing on or below the surface of the ground.

401-2.3 Demolition: Demolition shall consist of demolishing and removing or incorporating into embankment all non-vegetable matter appearing above, on, or below the ground surface. This shall include all material derived from the demolition of portland cement concrete items, such as base courses, curbs, curb and gutters, sidewalks, floors, steps, driveways, drainage structures of all sorts, guard fences, and other miscellaneous items such as foundations or walls of any sort, and iron or steel items; and shall include all asphaltic items, such as pavement and base courses.

401-2.4 Trees: Vegetable growth six (6) inches in diameter and larger, measured three (3) feet above ground shall be classified as a tree.

401-2.5 Brush: Vegetable growth less than six (6) inches in diameter, measured three (3) feet above ground shall be classified as brush.

401-2.6 All material excavated shall be considered as unclassified excavation, which shall consist of all material of whatever character encountered in the work, including soil, solid rock, fragmented rock, water, or man-made facilities.

401-3 Construction Details - Limits of Work:

401-3.1 In Development Areas: In developed and semi-developed areas where streets exist, the limits for clearing, grubbing, and demolition shall be as defined on the plans, but in no case shall work extend beyond the limits of the right-of-way, city property lines, or easements.

401-3.2 In Undeveloped Areas: In undeveloped areas where improvements are very scattered or non-existent, clearing, grubbing, and demolition shall extend to the limits of the right-of-way, city property lines, or easement unless otherwise indicated on the plans or covered in the special provisions. In the case of streets, the limits shall include the area along intersecting streets and alleys for such distance as required to provide a clear area for the construction.

401-3.3 Protection of Existing Facilities: The Contractor shall be responsible for protecting any improvement of any agency, public or private, in the vicinity of clearing grubbing, or demolition operations. When necessary, the Contractor shall enlist the assistance of the affected agencies in the location of their utilities. The Contractor will not be

responsible for the cost to any agency for assistance in the location of its facilities, but he shall be responsible for the cost of all damage to such facilities arising because of his carelessness or negligence.

401-4 Rock Excavation:

401-4.1 Any solid or fragmented rock over six inches in diameter encountered during excavation of the project site or borrow shall be removed and disposed of by the Contractor unless designated by the City Engineer. No direct compensation will be included for rock excavation.

401-5 Excavation:

401-5.1 Crushed Stone and Paved Areas: In all areas where concrete curb and gutter or paving is to be installed, the finished subgrade shall be excavated to the bottom of the granular stone base to allow for construction of curb and gutter, aggregate base, and paving. In all areas that are to receive curb and gutter and/or asphaltic paving, the subgrade shall be scarified and compacted in accordance with Section 401.6.

401-6 Fill and Grading:

401-6.1 Perform all cutting, filling, compacting of fills, and rough grading required to bring the entire project area to grade for all surfaced areas. Remove topsoil to its entire depth from the areas within lines five (5) feet outside areas to be occupied by roads, walks, and other surfacing. Pile topsoil in approved locations where it will not interfere with building or utility operations. All finish grading in areas designated to be fine graded shall be done with satisfactory topsoil and in such a manner as will permit the sowing of grass seed with no further work necessary.

401-6.2 Rough grading of areas beyond limits of fine grading shall be done with machine and shall be as smooth and free of rocks as can be obtained under machine conditions. Grades shall be accurately cut to elevations shown on elevations and cross sections.

406-6.3 All ditches, swales, and gutters shall be finished to drain readily.

406-6.4 Material for fill shall be free of roots, wood, or other organic material, and shall be taken from the project site and borrow area. Remove all debris subject to termite attack, rot, or corrosion, and all other deleterious materials from areas to be filled. Prior to placing fill material, the surface of the ground shall be scarified to a depth of six (6) inches and the moisture content of the loosened material shall be such that it will readily bond with the first layer of fill material. Place fill in layers not exceeding six (6) inches compacted or eight (8) inches loose material.

406-6.5 Compact each layer of fill by rolling or tamping to ninety-five (95) percent of maximum density at optimum moisture content. The degree of compaction shall be determined and controlled in accordance with ASTM D2922, AST D2167, or ASTM D1556. Compaction shall be accomplished by the use of power rollers, machine tampers, or other mechanical equipment approved by the City Engineer. If necessary, soil shall be moistened, or allowed to dry to the correct moisture content before compaction. Fill shall not be placed on a subgrade that is muddy, frozen, or that contains frost.

401-7 Tests:

401-7.1 The Contractor shall provide, as part of the obligation to perform the work, an in-place density test for each 6-inch lift, as directed by the City Engineer. Where tests indicate that fill does not conform to the compaction density specified, the fill shall be recompacted at the expense of the Contractor. The name of any testing shall be submitted to the City Engineer for approval. Copies of each test report shall be furnished to the City Engineer.

401-8 Subgrade Preparation:

401-8.1 Scope: This section governs the furnishing of all labor, equipment, tools, and materials, and the performance of all work for the subgrade preparation, complete, at locations shown, which have been previously graded as mentioned earlier, preparatory to constructing pavements for streets, alleys, runways, parking, or sidewalks, and the construction of curb, curb and gutters.

This section does not include the construction of any base courses.

401-8.2 Materials, Definitions, and Equipment:

401-8.2.1 Subgrade: Subgrade is defined as a well-graded and compacted surface, constructed as specified herein, to the grades, lines, and cross section shown, bladed and compacted to the specified density, preparatory to constructing pavements, or other improvements thereon.

401-8.2.2 Subgrade Preparation: Subgrade preparation is the repeated operation of fine-grading and compacting the subgrade until the specified lines, grades, and cross sections are obtained, and the materials are compacted to the specified depth and density.

401-8.2.3 Equipment: The subgrade preparation shall be completed by the use of motor graders, steel wheel rollers, and an approved template, stringline, or other approved method, as furnished by the Contractor.

401-8.3 Construction Details:

401-8.3.1 The subgrade surface shall be brought to the specified lines, grades, and cross sections by repeatedly adding or removing material and compacting to the specified density with a suitable roller to perform these operations. Tolerance allowed on all lines, grades, and cross sections shall be plus or minus 0.02 foot.

401-8.3.2 Compacting the Subgrade for Pavements: The subgrade for pavements shall be compacted to a density of at least ninety-five (95) percent of the maximum density for the material used as determined by ASTM Designation D-698, for a depth of at least six (6) inches below the finished subgrade elevation, and within the tolerance of the moisture for the type of material at ninety-five (95) percent of maximum density as shown on the moisture-density curve obtained. Any further compacted layers shall be accomplished in the same manner as specified.

401-8.3.3 Protection and Maintenance of Subgrade: The newly finished subgrade shall be repaired from action of the elements. Any settlement or washing that occurs prior to the acceptance of the work shall be repaired and the specific lines, grades, and cross section re-established. If subgrade loses its compaction due to the delay of paving, subgrade must be recompacted and tested.
The Contractor shall protect all pavements, curbs, curb and gutters, gutters and

sidewalks from his subgrade operation with an earth cushion, timber planking, or both, where tractors, graders, rollers, or other equipment are required to pass, or turn around. All resulting damage shall be repaired. Any damaged work that cannot be repaired to the satisfaction of the City Engineer shall be replaced by the Contractor at his own expense.

401-8.4 Cleanup: Cleanup shall follow the work progressively. Final cleanup shall follow immediately behind the completion of the subgrade. The Contractor shall remove from the project site all rubbish, equipment, tools, and surplus or discarded material, and temporary construction items. Debris from cleanup shall be removed from the project site.

DIVISION 500

CONSTRUCTION MATERIALS AND METHODS

FOR

STREETS AND ROADWAYS

501 MATERIALS

501-1 Granular Stone Base:

501-1.1 Base Course: Aggregate for base shall be essentially limestone or dolomite. It shall not contain more than 15 percent deleterious rock and shale. Sand may be added only for the purpose of reducing the plasticity index of the fraction passing the No. 40 sieve in the finished product. Any sand, silt, and clay, and any deleterious rock and shale shall be uniformly distributed throughout the mass. The aggregates shall conform to the following gradation requirements:

	Percent
Passing 1 inch sieve	100
Passing 1/1 inch sieve	60 - 90
Passing No. 4 sieve	40 - 60
Passing No. 40 sieve	15 - 35

The fraction passing the No. 4 sieve shall have a plasticity index not to exceed six.

501-2 Concrete Surface:

501-2.1. Portland Cement: Portland cement shall conform to "Standard Specification for Portland Cement" ASTM C150, latest revision, Type 1 or Type 1A. One sack of cement shall be considered as one cubic foot of volume or 94 pounds by weight.

501-2.2 Aggregates: Fine and coarse aggregates shall conform to "Standard Specification for Concrete Aggregates", ASTM C33, latest revision. The nominal maximum size of the coarse aggregate shall not be larger than one-fifth of the narrowest dimension between sides of forms, one-third the depth of the slabs, nor three-fourths of the minimum clear distance between reinforcing bars or between bars and forms, whichever is least. Coarse aggregate gradation shall conform to ASTM C33, latest revision, Size 57.

501-2.3 Admixtures: Air-entrained admixtures to be added in the field shall conform to "Standard Specifications for Air-Entraining Admixtures for Concrete", ASTM C260, latest revision. Water-reducing, retarding, or accelerating admixtures, if permitted by the Resident Inspector, shall conform to "Standard Specifications for Chemical Admixtures for Concrete", ASTM 494, latest revision.

501-2.4 Mixing Water: Mixing water for concrete shall be fresh, clean, and potable. Non-potable water may be used only if it produces mortar cubes having a 7- and 28-day strength equal to the strength of similar specimens made with distilled water, when tested in accordance with "Method of Test for Compressive Strength of Hydraulic Cement Mortars", ASTM C109, latest revision.

501-2.5 Curing Compounds: All curing compounds shall conform to specifications for liquid membrane forming compounds for curing concrete ASTM C209, latest revision, applied in accordance with manufacturer's recommendations.

501-3 Asphaltic Concrete Surface:

501-3.1 Prime Coat: The prime coat shall be medium-curing, cut back (MC-70) asphalt and shall conform to AASHTO M-82.

501-3.2 Surface Course: The asphaltic concrete surface course shall consist of a mineral aggregate compound of crushed stone and/or crushed gravel, sand gravel, sand, mineral filler, and asphaltic cement in such proportions that the composition of the finished mix is within the following range:

	% Max.	% Min.
Passing ½ inch sieve	100	--
Passing ½ inch sieve, retained on 3/8 inch sieve	0	25
Passing 3/8-inch sieve, retained on No. 4 sieve	20	45
Passing No. 4 sieve, retained on No. 10 sieve	7	35
Passing No. 10 sieve, retained on No. 40 sieve	7	30
Passing No. 40 sieve, retained on No. 80 sieve	5	20
Passing No. 80 sieve, retained on No. 200 sieve	3	18
Passing No. 200 sieve	4	10
Asphalt Cement	3.5	8

501-3.2.1 Mineral Filler: Mineral filler shall consist of limestone dust, portland cement, or other suitable mineral matter. It shall be thoroughly dry and free of lumps consisting of aggregations of fine particles. When tested in accordance with AASHTO T37, the mineral filler shall conform to the following gradation requirements:

	Percent
Passing No. 30 sieve	100
Passing No. 50 sieve	95 - 100
Passing No. 100 sieve	90 - 100
Passing No. 200 sieve	70 - 100

501-3.3 Asphalt Cement: Shall be 60-70 penetration grade asphalt cement, homogenous and free of water and shall be prepared by refining crude petroleum by suitable methods, and shall conform to the requirements of Section 1015 of the Missouri Standard Specifications for Highway Construction for penetration graded asphalt cement.

501-3.4 Certification: Submit manufacturer's certification of compliance which shall include quality and grading of aggregates and quality and grades of bituminous materials.

501-3.5 Chat will not be approved for use in asphaltic concrete unless the chat has been conditioned to meet the specific gradation.

501-4 Crushed Stone Surface:

501-4.1 Crushed Stone Surfacing: The graded stone shall consist of a natural or artificial mixture of hard, durable particles of coarse and fine limestone aggregate. The materials shall be free from soft or decomposed particles, and shall be uniformly graded so that it can be compacted into a hard dense mass. The natural or processed mixture shall conform to the following:

Sieve Designation	Percentage by Weight Passing Square Mesh Sieves
2 inch	100
1 inch	55 - 85
3/4 inch	50 - 80
#4	30 - 60

Suitable material shall be added and uniformly blended, if necessary, to make natural stone conform to the required gradation. The stone base shall be compacted to not less than 95% of maximum density at optimum moisture content as determined by AASHTO T-99, latest revision.

502 PLACEMENT OF GRANULAR STONE BASE AND CONCRETE

502-1 Base Course:

502-1.1 Contractor shall furnish, place, and compact a thickness of base course as specified on the plans, of crusher run limestone on a prepared subgrade. Base course shall be as specified in Paragraph 501-1 of this Division. The subgrade shall be prepared as specified in paragraph 401-8 of Division 400.

502-1.2 In no case shall granular base be placed or manipulated on muddy or frozen subgrade. Any mixture containing frost or frozen particles shall not be compacted or placed on the subgrade.

502-1.3 The granular base shall be handled in such manner as to avoid undue segregation. If segregation occurs or if the fixture becomes contaminated, such segregation or contaminated material shall be removed and replaced with material of suitable quality and gradation.

502-1.4 The maximum compacted thickness of any one layer shall not exceed six (6) inches. When the specified compacted depth of the base course exceeds six (6) inches, the base shall be constructed in two or more layers of approximately equal thickness. Preliminary compaction shall be performed by means of pneumatic-tired rollers. After preliminary compaction has been secured, finish compaction shall be carried to completion by means of self-propelled steel-wheeled rollers weighing not less than ten tons. Shaping and compacting shall be carried on until a true, even, uniform base course of proper grade, cross-section, and density is obtained. Proper moisture content shall be maintained by wetting the surface or allowing it to dry, as required, during shaping and compacting operations. The use of excess water resulting in runoff or in the formation of a slurry on the surface shall be avoided. The stone base shall be compacted to not less than 95 percent of the maximum density of optimum moisture content as determined by Mod AASHTO T-99.

502-2 Proportioning Concrete:

502-2.1 General: Proportions of aggregate to cement and water shall be such as to provide a concrete mix that will work readily into corners and angles of forms and around reinforcement and other embedded items without causing segregation of materials.

502-2.2 Concrete Strength: Concrete shall be provided to develop a compressive strength of not less than 3500 psi at 28 days for field cured cylinders. All structural concrete shall contain entrained air from 3-1/2 to 6-1/2 percent by volume. The minimum cement content of the mix shall be 6 sacks per cubic yard of concrete.

502-3 Mixing Concrete:

502-3.1 Ready-Mixed Concrete: Ready-mixed concrete will be permitted provided it conforms to the "Standard Specification for Ready-Mixed Concrete", ASTM C94 and to the applicable portions of these specifications.

502-4 Concrete Placement:

502-4.1 Preparation Before Placing: Hardened concrete and foreign materials shall be removed from the inner surfaces of the conveying equipment.

502-4.2 Formwork shall be completed; reinforcement shall be secured in place; expansion joint material, waterstops, anchors, pipe sleeves, and other embedded items shall be positioned before any concrete is placed. Subgrades shall be sprinkled sufficiently to eliminate absorption of water from the concrete before any concrete is placed.

502-4.3 Conveying: Concrete shall be handled from the mixer to the place of final deposit as rapidly as practicable by methods that will prevent separation or loss of ingredients and in a manner that will assure that the required quality of the concrete is obtained. Conveying equipment shall be of size and design to insure a continuous flow of concrete at the delivery end. Conveying equipment and operations shall conform to the following requirements:

502-4.3.1 Truck mixers, agitators, and non-agitating units and their manner of operation shall conform to the applicable requirements of "Specifications for Ready-Mixed Concrete", ASTM C94. All conveying equipment shall be adequately sized to insure that discharge of the concrete from each truck to its point of final placement shall be accomplished within 45 minutes after the truck arrives at the site. Any truckload of concrete not discharged within the 45 minute time limit shall not be placed on the project.

502-4.3.2 Belt conveyors shall be horizontal or at a slope that will not cause segregation or loss. An approved arrangement shall be used at the discharge end to prevent separation. Long runs shall be discharged without separation into a hopper.

502-4.3.3 Chutes shall be metal or metal-lined and shall have a slope not exceeding 1 vertical to horizontal and not less than 1 vertical to 3 horizontal. Chutes more than 20 feet long and chutes not meeting the slope requirements may be used provided they discharge into a hopper before distribution.

502-4.3.4 Concrete for riding surfaces shall not be conveyed or placed by mechanically applied pressure without prior approval unless specified in the contract drawings and specifications. Other concrete may be conveyed or placed by mechanically applied pressure. Pumping equipment shall be arranged to prevent transmission of vibration to freshly placed concrete.

(a) Equipment provided for conveying and placing concrete by mechanically applied pressure shall have adequate capacity and be suitable for the intended work. It shall be so operated as to produce a continuous stream of uniform concrete. The system through which the concrete is pumped shall be manufactured so that no aluminum parts will come into contact with the concrete.

502-4.4 Depositing: Concrete shall be deposited continuously, or in layers of such thickness that no concrete will be deposited on concrete that has hardened sufficiently to cause the formation of seams or planes of weakness within the section. Placing shall be carried on at such a rate that the concrete that is being integrated with fresh concrete is still plastic. Concrete that has partially hardened or has been contaminated by foreign materials shall not be deposited.

502-4.4.1 Concrete shall be deposited as nearly as practicable in its final position to avoid segregation due to flowing or rehandling and shall drop vertically into the center of the forms. In no case shall concrete be allowed to fall more than five feet, or at other times when required, drop chutes or other approved devices shall be used.

502-4.5 Where surface mortar is to be the basis of the finish, the coarse aggregate shall be worked back from the forms with a suitable tool so as to bring a full surface of mortar against the form, without the formation of excessive surface voids. All concrete shall be consolidated by vibration, spading, rodding, or forking so that the concrete is thoroughly worked around the reinforcement, around embedded items, and into corners of forms, eliminating all air or stone pockets that may cause honeycombing, pitting, or planes of weakness. Mechanical vibrators shall have a minimum frequency of 7,000 revolutions per minute and shall be operated by competent workmen. Overvibrating and use of vibrators to transport concrete within forms shall not be allowed. Vibrators shall be inserted and withdrawn at many points, from 18 to 30 inches apart. At each insertion, the duration shall be sufficient to consolidate the concrete, but not sufficient to cause segregation, generally from 5 to 15 seconds duration. A spare vibrator shall be kept on the job site during all concrete placing operations.

502-4-6 Weather Conditions:

502-4.6.1 Unless adequate protection is provided, concrete shall not be placed in rain, sleet, or snow. Rain water shall not be allowed to increase the mixing water nor to damage the surface finish.

502-4.6.2 Concrete Temperature: When the ambient temperature falls below 40EF, the minimum temperature of concrete as placed shall be 50EF. The inside of forms, reinforcing steel, and embedded fixtures shall be free of all snow and ice at the time concrete is placed. Concrete shall not be placed on a frozen subgrade. If the subgrade is frozen, concreting shall be delayed until the ground thaws sufficiently to insure that it will not freeze again during the curing period.
502-4.6.3 Hot Weather Concrete Placement: Concrete placed in hot weather shall have a placing temperature which will not cause difficulty from loss of slump, flash set, or cold joints (less than 90EF). Forms, reinforcing steel, and subgrade shall be sprinkled with cool water just before concrete is placed. Prior to placing concrete, however, there shall be no standing water on the subgrade.

502-4.7 Joints:

502-4.7.1 Construction joints are recommended and shall be placed so as to least impair the strength of the structure. All reinforcing bars and welded wire fabric shall continue across construction joints. Construction joints shall conform to the details shown on the plans and shall be keyed as shown. Construction joints shall be thoroughly wetted and coated with a mixture of 1:2 mortar immediately before the new concrete is placed. The surface of the concrete at all joints shall be thoroughly cleaned and all laitance shall be removed. Immediately before placing fresh concrete, the surface of the existing concrete at the joint shall be dampened, but not saturated. The edges of all joints that are exposed to view shall be carefully finished true to line and elevation. Construction joints shall be made at the close of each day's work or when the work is stopped or interrupted for more than 30 minutes. No transverse construction joint shall be constructed within 10 feet of an expansion or contraction joint.

502.4-7.2 Expansion Joints: Expansion joints shall extend for the full cross section of the concrete pavement. Filler placed prior to the placement of the concrete shall be installed with a removable cap or edging bar to serve as a guide for edging the joint and protection for the filler during the placing and finishing of the concrete. Joints constructed after the placement of concrete shall be sawed full depth and the exposed edges shall be ground to a chamfer of 3/8 inch. The filter shall rest snugly on the subgrade from form to form. The joints shall be

sealed as specified below. Upon removal of the forms, any struts or fins of concrete extending across the joint shall be removed to the full width of the joint and the full thickness of the pavement.

502-4.7.3 Sawing: Unless otherwise provided, all transverse contraction and all longitudinal joints in the pavement shall be sawed with the joint groove cut to the dimensions shown on the plans. If the groove for poured type transverse joints is cut prior to removal of the forms, the groove shall be cut as close as is practicable to the pavement edge, and the resulting crescent shaped plug in the groove immediately adjacent to the form will be acceptable. For intersections and irregular pavement, joints shall be sawed at locations as specified by the City Engineer. Sawing of the joints shall begin as soon as the concrete has hardened sufficiently to permit sawing without excessive raveling. All joints shall be sawed before uncontrolled shrinkage cracking takes place. The sawing of any joint shall be omitted if a crack occurs at or near the joint location prior to the time of sawing. Sawing shall be discontinued when a crack develops ahead of the saw. In general, all joints should be sawed in sequence. The City Engineer reserves the right to have the Contractor install preformed type joints on multiple width construction when the use of sawed joints fails to prevent random cracking.

502-4.7.4 Sealing Joints: All sawed contraction joints and sawed for formed expansion joints shall be sealed with joint sealing material before the pavement is opened to traffic including construction traffic, and as soon after completion of a minimum curing period of 72 hours as is practicable. Immediately prior to sealing, the joints shall be thoroughly cleaned and dried. The sealing material shall be heated to the pouring temperature recommended by the manufacturer. Any material that has been heated above the maximum safe heating temperature will be rejected. The sealing material shall be installed in such a way as to fill the joint opening completely and uniformly from the bottom to the top, and any excess material shall be removed from the pavement surface.

502-4.8 Patching:

502-4.8.1 General: All tie holes and all repairable defective areas shall be patched immediately after form removal. After being cleaned and thoroughly dampened, the holes shall be filled with patching mortar and finished.

502-4.8.2 Defective Areas: All honeycombed and other defective concrete shall be removed down to sound concrete. The area to be patched and an area at least six inches wide surrounding it shall be dampened to prevent absorption of water from the patching mortar. A bonding grout shall be prepared using a mix of approximately one part cement to one part fine sand passing a No. 30 mesh sieve, shall be mixed to the consistency of thick cream, and shall then be well brushed into the surface.

502-4.8.3 The patching mixture shall be made of the same material and of approximately the same proportions as used for the concrete, except that the coarse aggregate shall be omitted and the mortar shall consist of not more than 1 part cement to 1½ parts sand by damp loose volume. White portland cement shall be substituted for a part of the gray portland cement on exposed concrete in order to produce a color matching the color of the surrounding concrete, as determined by a trial patch.

502-4.8.4 The quantity of mixing water shall be no more than necessary for handling and placing. The patching mortar shall be mixed in advance and allowed to stand with frequent manipulation with a trowel, without addition of water, until it

has reached the stiffest consistency that will permit placing.

502-4.8.5 After surface water has evaporated from the area to be patched, the bond coat shall be well brushed into the surface. When the bond coat begins to lose the water sheen, the premixed patching mortar shall be applied. The mortar shall be thoroughly consolidated into place and struck off so as to leave the patch slightly higher than the surrounding surface. To permit initial shrinkage, it shall be left undisturbed for at least one hour before being finally finished. The patched area shall be kept damp for seven days. Metal tools shall not be used in finishing a patch in a formed wall which will be exposed.

502-4.9 Curing and Protection: Exposed surfaces of concrete shall be protected from premature drying and excessively hot or cold temperatures for the period of time necessary for the hydration of the cement and proper hardening of the concrete.

502-4.9.1 Protection from Mechanical Injury: During curing, the concrete shall be protected from damaging mechanical disturbances, heavy shock, or excessive vibration. All finished surfaces shall be protected from damage caused by construction equipment, materials, or methods and rain or running water.

502-4.9.2 Temperature and Shrinkage Cracks: Any temperature and shrinkage cracks which develop prior to the final acceptance of the project shall be repaired and waterproofed.

502-4.9.3 Concrete shall be covered with insulated blankets if the air temperature falls below 35°F for a minimum of three days after concrete placement.

502-4.10 Testing:

502-4.10.1 Strength Tests: Test cylinders shall be taken by the Contractor and shall be cured and tested in accordance with the "Standard Method of Making and Curing Concrete Compressive and Flexural Strength Test Specimens in the Field", ASTM C31. Not less than three specimens shall be made for each 100 cubic yards of concrete or fraction thereof in each day's pour, except that in no case shall a given mix design be represented by less than three tests. The standard age of test shall be 28 days, but seven-day tests and 14-day tests may be used provided the relation between the seven-day, 14-day, and 28-day strengths of the concrete is established in advance by test for the materials and proportions used and approved by the City Engineer. If the average of the strengths of the test cylinders fails to attain the specified strength so as to justify doubt as to the quality of the concrete, further tests shall be made, at the Contractor's expense, of the concrete in place to determine its fitness to remain in the structure. These tests shall be performed in accordance with the "Standard Method of Obtaining and Testing Drilled Cores and Sawed Beams of Concrete", ASTM C42, latest revision.

(a) The strength level of the concrete will be considered acceptable if the average of three 28-day test strength results equal or exceed the specified compressive strength, and no individual tests fall below the specified compressive strength by more than 500 psi.

(b) All strength tests shall be performed by a reputable testing laboratory hired by the Contractor.

502-4.10.2 Slump Tests: Slump tests will be performed, and shall conform to "Standard Method of Test for Slump of Portland Cement Concrete", ASTM C143, latest revision.

502-4.11 Finish: Riding surfaces shall be finished true to the alignment, grade, cross section, and camber shown on the approved plans. These surfaces shall be finished by use of an approved mechanical finishing machine. Use of vibratory screeds will not be approved whether or not they are a part of the proposed finishing machine.

502-4.11.1 Machine finishing shall be with an approved self-propelled mechanical finishing machine. The City may waive its use on isolated irregular shaped areas of the pavement. The finishing machine shall travel on adjustable rails or guides set to proper grade, and supported outside the limits of the finished riding surface. The rails shall be supported to limit the full operating load deflection between supports to 1/8 inch or less. They shall, in general, be placed parallel with the centerline of roadway or the longitudinal axis of the area to be finished. Where supports are so located that fresh concrete must be placed around them, the rails or guides shall be furnished in sections of 10 feet or less and placed above the concrete surface. The sections and supports shall be removed and the holes filled with concrete immediately after the final straightedging. The finishing machine shall make sufficient passes to obtain the specified cross section and surface finish. The final pass of the machine shall be of maximum practicable length and shall be coordinated with the rate of placement. Finishing machine loads will not be permitted on concrete less than 48 hours old.

502-4.11.2 Where hand finishing of riding surfaces is permitted, the surface shall be struck off to the design section by a rigid metal shod template. The template shall be supported on rails or guides that can be adjusted to produce the design section and slab thickness. The rails or guides shall be supported above or outside the concrete surface. The surface behind the template shall be finished with a longitudinal and transverse motion. Each transverse pass shall overlap the previously floated area by approximately one-half the length of the float.

502-4.11.3 Sufficient work bridges shall be provided to complete the work in an orderly and continuous manner. Work bridges shall be supported outside the limits of concrete placement.

502-4.11.4 Straightedging: The riding surface shall be checked with a 10-foot straightedge immediately after the final finishing operation. The straightedge shall be pulled lightly across the surface from one edge of the finished area to the other without interruption. Reaching from outer edges to the center of the finished area will not be permitted. Each transverse pass shall overlap the previously straightedged portion by approximately one-half the length of the straightedge. A lightweight longitudinal float may be used in a similar manner in lieu of the straightedge. The straightedge or float shall not be used to cut or move concrete from its finished position. Any irregularities, bumps, or improperly finished areas shall be refinished and the surface again checked by repeating the straightedging operation.

502-4.11.5 Roadway Finish Texture: The roadway surface, except within 12 inches of the inside face of the curb, shall be textured as soon as the condition of the concrete will permit. Hand operated devices producing a satisfactory texture will be permitted.

502-4.11.6 Surface Test: As soon as curing has been completed, the riding surface will be thoroughly straightedged and all variations exceeding 1/8 inch in 10 feet will be plainly marked. Areas more than 1/8 inch high shall be removed by an approved device consisting of multiple cutting edges leaving a grooved surface

finish comparable to that produced by the broom. The use of a bush hammer or other impact device will not be permitted.

502-4.11.7 Unless an armored joint is shown on the plans, construction and expansion joints in the roadway surface shall be carefully edged and left free of all mortar and concrete. These joints shall be sealed with joint sealing material if shown on the plans. Required joint sealing shall be done prior to surface sealing.

503 PLACEMENT OF ASPHALTIC CONCRETE SURFACING

503-1 Prime Coat: The prime coat shall be placed only on a dry or slightly damp, clean base free from loose or foreign material when atmospheric temperature is above 50°F. The rate of application shall be from 0.2 to 0.5 gallons per square yard, depending upon the surface texture. Temperature of the prime coat at the time of application shall not be less than 100°F, or more than 180°F. Any prime coat overspray on adjacent concrete surfaces shall be removed to the City's satisfaction. The prime coat will be allowed to cure a minimum of 24 hours before application of the surface course.

503-2 Tack Coat: The tack coat shall be placed on an existing asphaltic surface that is free of all dust, loose material, grease, or other foreign materials when atmospheric temperature is above 40°F. The asphaltic emulsion shall be applied uniformly with a pressure distributor at a rate of application from 0.02 to 0.10 gallons per square yard. Water may be added to the asphalt emulsion and mixed therewith in such proportion that the resulting mixture will not contain more than 50 percent of added water. The application of the resulting mixture shall be such that the original emulsion will be spread at the specified rate. Temperature of the tack coat at the time of application shall not be less than 75°F nor more than 130°F. The tack coat shall be allowed to properly cure and the tacked surface shall be cleaned of all dirt and surplus sand before the next course is placed. The tack coat shall be applied in such a manner as to cause the least inconvenience to traffic and to permit one-way traffic without pickup or tracking of the asphaltic emulsion.

503-3 Surface and Bituminous Base Course: The asphalt concrete surface course shall be a hot plant-mix of specified thickness suitably placed and compacted, and shall be placed in layers not exceeding two inches in compacted thickness. The asphaltic concrete shall be delivered to the work area in dump trucks properly lubricated to prevent sticking. The asphaltic concrete shall be covered during transit, and shall arrive at the job site at not less than 275°F. Placing of asphaltic concrete shall be as follows:

503-3.1 The asphaltic concrete shall not be placed when either the air temperature or temperature of the surface on which the mixture is to be placed is below 50°F for the surface course or 40°F for the bituminous base course or on any wet or frozen surface, or when weather conditions prevent the proper handling or finishing of the mixture.

503-3.2 The asphalt concrete surface shall be compacted while the surface is hot with power roller equipment as specified. Rolling shall continue until a uniform, even textured surface of the thickness specified is produced. Rolling shall begin at the outer edge and continue toward the center. Each pass shall overlap the preceding one by at least one-half of the rear roller width. Delays in rolling freshly spread mixture will not be tolerated. Traffic shall not be permitted on the finished pavement until it has cooled to atmospheric temperature. Final rolling shall be done with either a two or three-wheel tandem-type roller weighing not less than 10 tons.

503-3.3 Around areas not accessible to power rollers, compaction shall be secured by hand tamping, and all joints must be effectively sealed.

503-3.4 The finished surface shall be rolled until it is free from waves and irregularities. All surplus material shall be removed prior to final acceptance.

503-3.5 If the asphaltic concrete construction consists of more than a single layer, each layer shall be compacted as specified, and allowed to cool to the ambient temperature before the next layer is placed.

503-3.6 The contractor shall provide a leveling course at areas and at a thickness necessary to obtain the elevation and cross sections as shown on the plans, prior to placing the surface course. The areas of existing asphaltic pavement that require an overlay of asphaltic concrete shall be as specified on the plans. The finished surface course, as placed, shall be performed in such a manner as to provide the smoothest possible riding surface.

503-4 Compaction and Testing:

503-4.1 After final rolling, the finished course shall at no point have a density less than ninety-five (95) percent of the laboratory compacted density. Field determination of the density shall be the responsibility of the Contractor and considered incidental to the paving operations. Contractor shall provide access to the City and its representatives for any and all testing of asphaltic concrete paving.

503-4.2 Testing Pavement: The finished courses shall have the minimum thickness shown on the approved design plans. Tests will be made to insure that each course is being constructed of proper thickness, composition and density. The Contractor shall cut samples from any layer of the compacted mixture at locations designated by the City and shall deliver them to the testing laboratory in good condition. Samples may be obtained by either sawing with a power saw or by drilling 4-inch diameter cores. Each sawed sample shall consist of a single piece of the pavement of the size designated by the City, but not larger than 12 inches square.

503-4.3 Density Samples: Each sample for laboratory density determination shall consist of four cores. All samples, whether sawed or cored, shall consist of an undisturbed portion of the compacted mixture removed for the full depth of the layer or course to be tested.

503-4.4 Thickness Samples: Each sample taken for course thickness shall consist of one 4-inch diameter core taken for the full depth of the course. Each sample taken for total compacted thickness shall consist of one 4-inch diameter core taken for the full depth of bituminous construction. Total thickness samples shall be obtained after all bituminous construction is completed on the project.

503-4.5 Surface Restoration: The surface from which samples have been taken shall be restored by the Contractor with the mixture then being produced not later than the next day of plant operation, if construction is still in progress. If bituminous construction has been completed, the surface from which samples have been taken shall be restored within 48 hours with hot mix asphalt.

503-4.6 Grade and Surface Smoothness Requirements: The finished surface of the bituminous courses shall conform to the grade lines and elevations shown on the plans. The grade and crown slopes shall not deviate more than 0.05 feet from the plan grades. The surface shall not vary more than 1/4 inch when a 12 foot straightedge is laid on the surface parallel with the centerline of the paved area or transverse from the crown to pavement edge.

503-4.7 Deficiency in Surface Limit: Surface finish shall be provided such that surface water drains to ditches and guttering. Depressions in the surfacing, which are exhibited by ponding of water, shall be remedied by the addition of an overlay of asphaltic concrete to eliminate the depression.

503-4.8 Deficiency in course and total thickness: Should tests on core samples indicate the thickness is less than the design thickness, the Contractor shall provide additional asphaltic concrete overlay to the entire surfacing area for which the tests

indicated a thickness deficiency. One inch minimum of compacted asphaltic concrete overlay shall be added to those deficient areas. The areas that are found to be deficient shall first be cold milled 1/2 inch minimum over the entire deficient area, then overlaid with a thickness sufficient to bring the area up to the design thickness and grade. The deficient area shall be determined in accordance with paragraph 503-4.4 of this Section and/or from core samples taken at a minimum distance of 300 feet between cores.

504 PLACEMENT OF CONCRETE CURB AND GUTTER

504-1 Formwork:

504-1.1 Forms shall be metal or sound dressed lumber, straight, free from warp, of sufficient strength to resist springing during construction, and of a height equal to the full depth of the item to be constructed. Wood forms shall have a minimum nominal thickness of two inches except where flexible forms are used. Flexible forms will be required for all curved form lines, except that straight steel form sections ten feet long or less may be used for form lines having a radius greater than 200 feet. Straight steel form sections five feet long will be acceptable for form lines having a radius of not less than 100 feet. The forms shall be thoroughly cleaned, well oiled, securely staked, braced, and held to the required line and grade.

504-1.2 In lieu of the forming requirements specified above, slip-form methods may be used for placement of concrete curb, concrete gutter, curb and gutter, and paved ditch provided proper lines, grades, and typical sections are maintained.

504-2 Concrete Placement:

504-2.1 Curb and gutter shall be placed on a granular stone base. Base shall be compacted to 95 percent of maximum density, and shall be of uniform thickness. Granular base material shall be as specified for base course in Paragraph 501-1 of this Division.

504-2.2 Concrete shall be placed on the prepared and sprinkled granular base, consolidated, and struck off to the required thickness. Concrete shall be tamped or vibrated sufficiently to eliminate all voids and to bring mortar to the top, after which the surface shall be finished smooth and even. All edges shall be rounded with an edging tool having a 1/4 inch radius. Faces of curb shall be rounded at the top and bottom by means of an approved tool, to the radius shown. After finishing, concrete shall be cured in the same manner as required for concrete pavement except that transparent membrane shall be used in lieu of pigmented membrane.

504-3 For Removal and Backfilling:

504-3.1 After the concrete has set sufficiently, the forms shall be removed, and where necessary, the contractor shall backfill adjacent to the concrete with suitable material, compacted and finished in a satisfactory manner.

504-4 Crack Control Joints:

504-4.1 When the concrete curb and gutter has cured sufficiently to allow saw cuts to be made without raveling, the contractor shall saw crack control joints. Joints shall be cut at intervals of 10 feet maximum. Joints shall be sawed within 48 hours after placement. Sawing of joints shall be considered a part of curb and gutter construction, with no extra compensation provided. All sawed joints shall be 3/8 inches wide by 2 inches deep, and filled with an approved joint filler material.

DIVISION 600

CONSTRUCTION MATERIALS AND METHODS

FOR

SIDEWALKS AND DRIVES

SIDEWALKS 600

601 SIDEWALKS

601-1 All sidewalks must be compliant with the "Americans with Disabilities Act Accessibility Guidelines (ADAAG)", latest revision. Exceptions must be approved by the City Engineer.

601-2 Sidewalk Dimensions and Reinforcement: All walks shall be concrete, five foot wide and four (4) inches thick. All walks shall have a minimum of one (1) layer of welded wire fabric reinforcing.

601-3 Subgrade: Shall be prepared in accordance with the excavation, embankments, compaction, and preparation of the subgrade specifications for Streets and Roadways.

601-4 Base: Shall be a minimum of two (2) inches thick and shall be in accordance with the base course specifications of Streets and Roadways.

601-5 Concrete: All walks shall be Portland Cement concrete conforming to the specifications for Concrete Pavement in the Streets and Roadways Section.

601-6 Finish: After the initial set has taken place, the surface shall be stable, slip resistant and does not pond water.

601-7 Control Joints: Shall be spaced equal to the width of the sidewalk and shall be a minimum of one-fourth (1/4) the total slab depth. The joints shall be made using an approved grooving tool and shall be at right angles to the length of the walk. The edge of the walk shall be finished with an edger having a one-half (½) inch radius.

601-8 Detectable Warnings: Detectable warnings (truncated domes) shall be preformed and installed as per manufacture's recommendations. Stamped concrete will not be accepted.

602 DRIVEWAYS

602-1 Definition: A driveway shall be any vehicle entrance or exit from a street other than an intersecting street or alley.

602-2 Limitations: Driveways shall be a minimum of ten (10) feet wide and a maximum of thirty (30) feet. All concrete slabs shall be a minimum of six (6) inches thick and properly reinforced. All asphaltic concrete slabs shall have a total thickness of eight (8) inches minimum, including the base course.

602-3 Subgrade: Shall be prepared in accordance with the specifications of excavation, embankments, compaction, and preparation of subgrade in the Streets and Roadways section.

602-4 Base: Shall be as specified under Base Course in the Streets and Roadways section.

602-5 Materials:

602-5.1 Drives constructed of Portland Cement concrete shall meet all specifications for Concrete Pavement in the Streets and Roadways section.

602-5.2 Drives constructed of asphaltic concrete shall meet the specifications of Asphaltic Concrete Paving in the Streets and Roadways section. No asphaltic concrete drives will be allowed on street right-of-way.

602-6 Slope: All drives shall have a maximum slope of seven (7) percent and the entrance shall meet the established street grade. Where conditions warrant, steeper slopes may be approved by the City.

602-7 Expansion Joints: Shall be non-extruding, resilient, filler type conforming to ASTM C1752, latest revision. Expansion joints shall be placed on each side of the driveway in the curb and gutter, sidewalk, and if the drive extends past the property line, an expansion joint shall be placed at the property line.

602-8 Pedestrian Access: Newly constructed driveways shall accommodate and existing or future pedestrian access route across the driveway that meets current ADAAG requirements. Width of access route shall be 5 feet wide.

Z:\Carl Junction MO\City of Carl Junction\Standard Specifications\Drawings\Cj-specs-TEST.dwg, 3/5/2015 3:42:15 PM

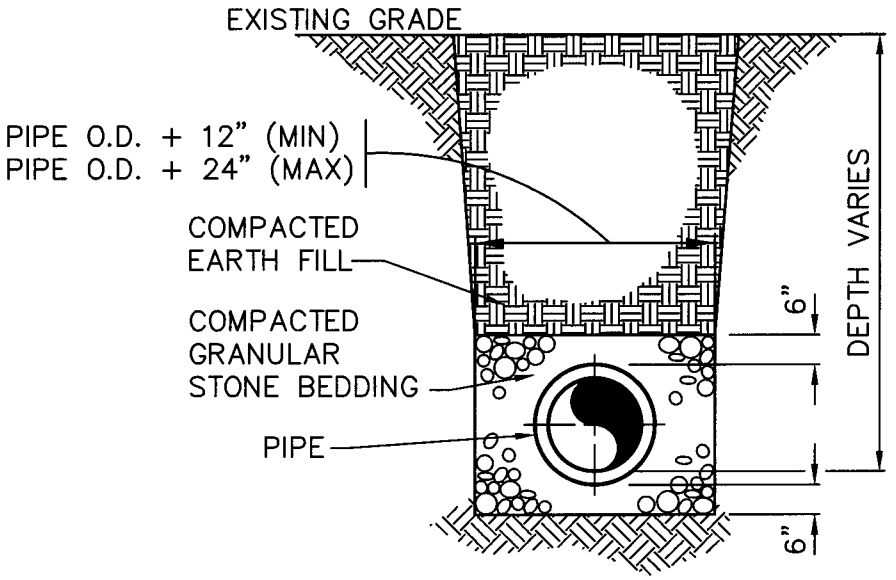

SEWER LINE TRENCH & BEDDING DETAIL

N.T.S.

* NOTE: TRENCH SHALL BE BACKFILLED FULL DEPTH WITH COMPACTED GRANULAR STONE BEDDING AT ALL ROADWAY CROSSINGS.

CITY OF CARL JUNCTION, MISSOURI

ALLGEIER, MARTIN & ASSOCIATES, INC.
CONSULTING ENGINEERS & SURVEYORS
JOPLIN, MISSOURI

Z:\Carl Junction MO\City of Carl Junction\Standard Specifications\Drawings\Cj-specs-TEST.dwg, 3/5/2015 3:43:04 PM

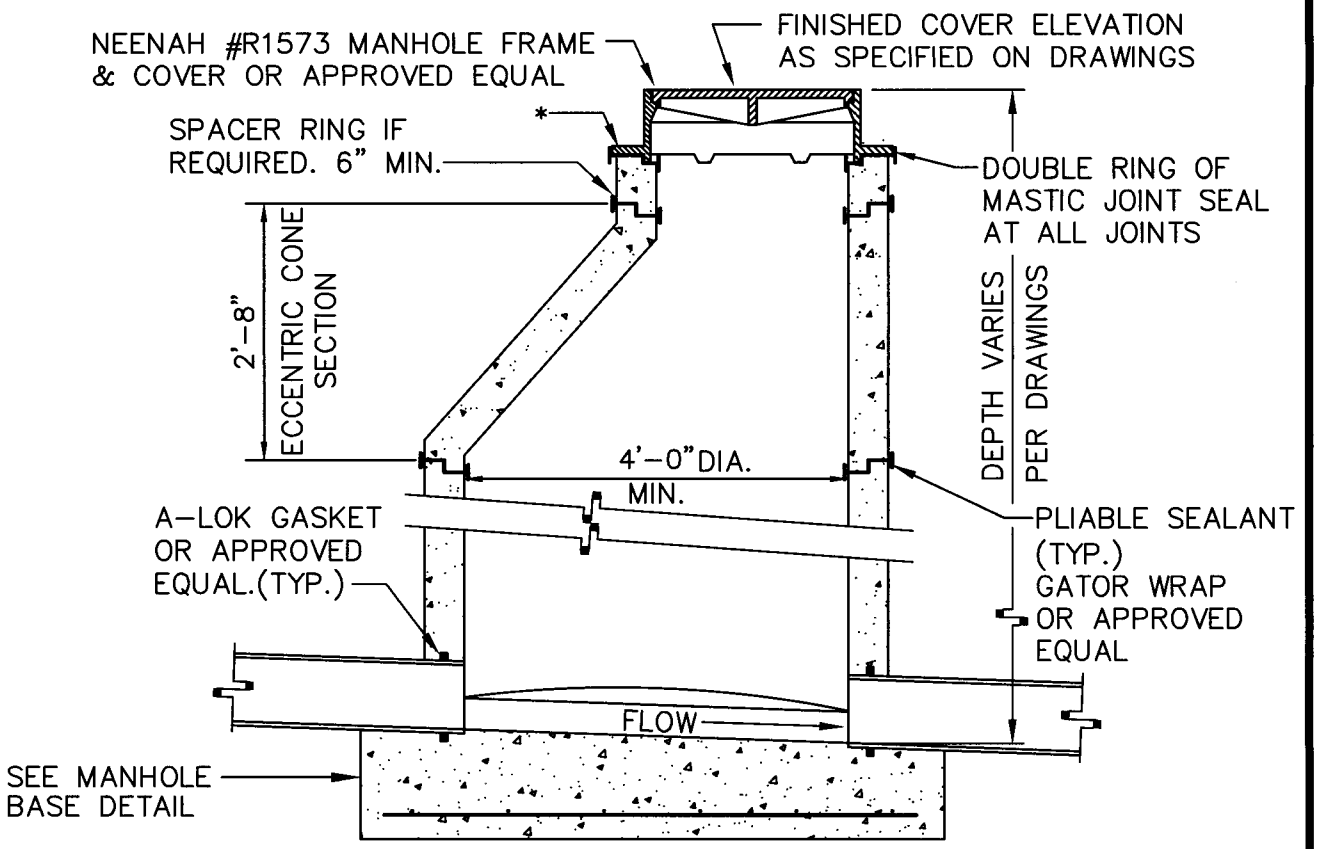

TYPICAL PRECAST MANHOLE DETAIL

N.T.S.

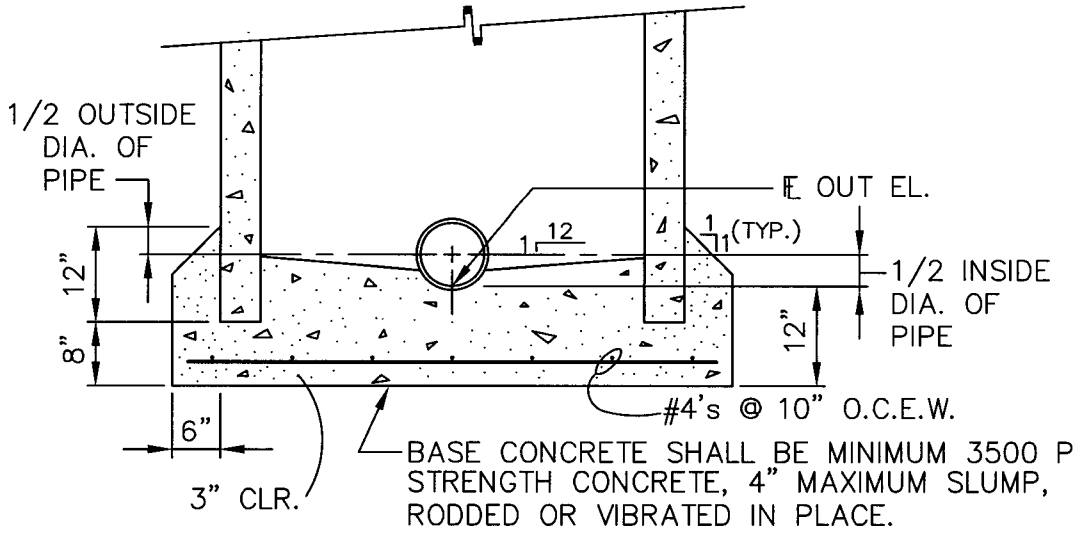

MANHOLE BASE DETAIL

N.T.S.

* IN LOW LYING AREAS WHERE GROUND WATER IS AN ISSUE & TO PREVENT INFILLTRATION A UNI-BAND OR APPROVED EQUAL SHALL BE USED

CITY OF CARL JUNCTION, MISSOURI

ALLGEIER, MARTIN & ASSOCIATES, INC.
CONSULTING ENGINEERS & SURVEYORS
JOPLIN, MISSOURI

Z:\Carl Junction MO\City of Carl Junction\Standard Specifications\Drawings\Cj-specs-TEST.dwg, 3/5/2015 3:43:38 PM

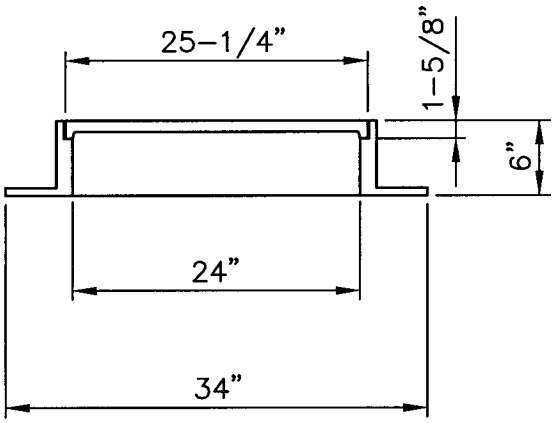

STD. FRAME & COVER,
NEENAH R-1573
OR APPROVED EQUAL

TOTAL WEIGHT OF FRAME
& COVER, 400 LBS. (MIN.)

MANHOLE FRAME & COVER DETAIL

N.T.S.

NOTES:

INVERTS COMING IN AT ELEVATION HIGHER THAN THE OUTLET INVERT SHALL BE FILLETED TO A UNIFORM SLOPE BETWEEN INLET AND OUTLET INVERTS. INVERTS COMING INTO THE MANHOLE AT AN ANGLE WITH THE OUTLET PIPE SHALL BE CURVED INTO THE OUTLET CHANNEL. FLOW CHANNEL THRU ALL MANHOLES SHALL CONFORM TO ½ THE INSIDE DIAMETER OF THE SEWER PIPE CROSS SECTION. ½ SECTION OF SEWER PIPE MAY BE USED ON STRAIGHT RUNS THRU MANHOLES FOR FLOW CHANNEL.

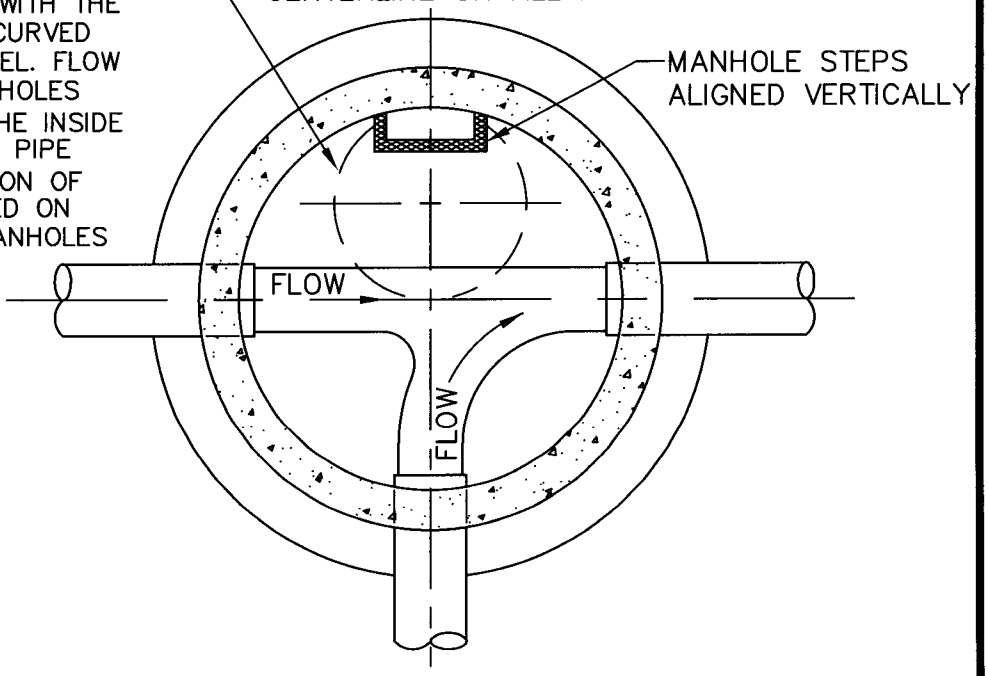

PLAN – TYPICAL ALL MANHOLES

N.T.S.

CITY OF CARL JUNCTION, MISSOURI

ALLGEIER, MARTIN & ASSOCIATES, INC.
CONSULTING ENGINEERS & SURVEYORS
JOPLIN, MISSOURI

Z:\Carl Junction MO\City of Carl Junction\Standard Specifications\Drawings\Cj-specs-TEST.dwg, 3/5/2015 3:44:20 PM

DROP MANHOLE NOTE:

TYPE 'A' DROP – 2' MIN. TO 8' MAX.
PIPE – SDR 35 P.V.C.
TYPE 'B' DROP – OVER 8'
PIPE – CLASS 50 DUCTILE IRON

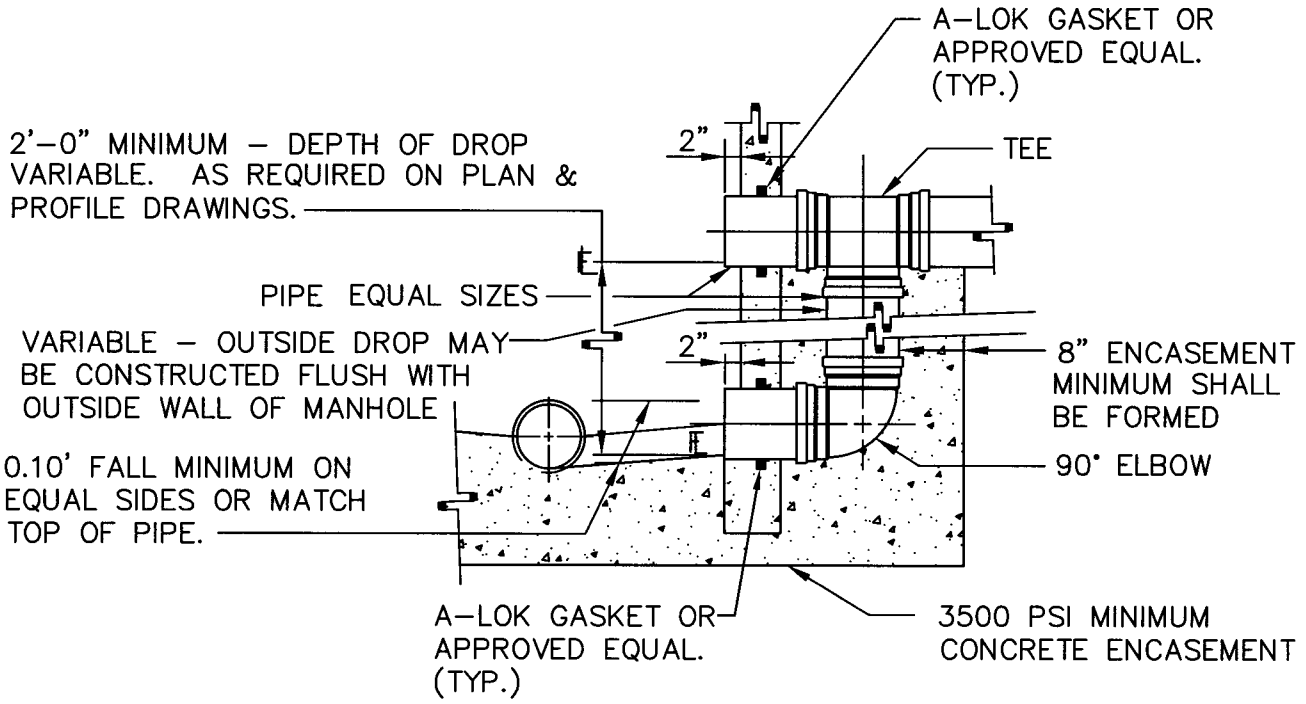

DROP MANHOLE DETAIL

N.T.S.

CITY OF CARL JUNCTION, MISSOURI

ALLGEIER, MARTIN & ASSOCIATES, INC.
CONSULTING ENGINEERS & SURVEYORS
JOPLIN, MISSOURI

Z:\Carl Junction MO\City of Carl Junction\Standard Specifications\Drawings\Cj-specs-TEST.dwg, 3/5/2015 3:44:50 PM

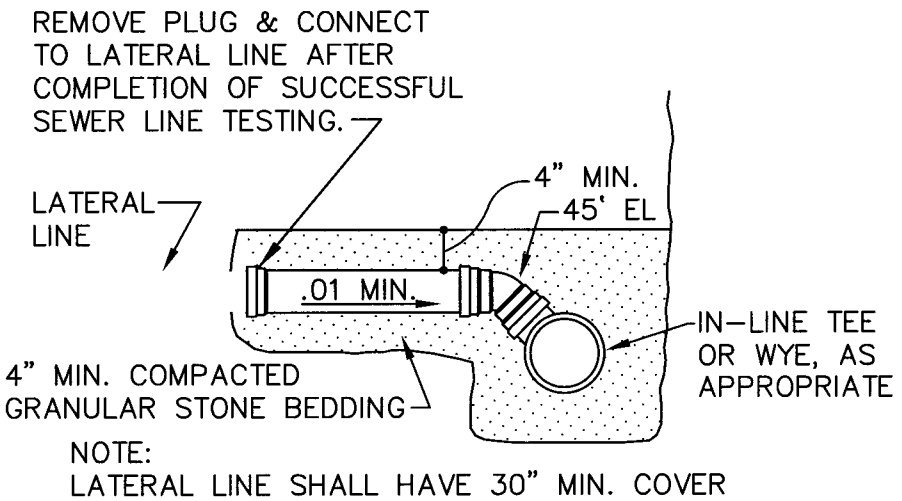

SERVICE LATERAL DETAIL

N.T.S.

CITY OF CARL JUNCTION, MISSOURI

ALLGEIER, MARTIN & ASSOCIATES, INC.
CONSULTING ENGINEERS & SURVEYORS
JOPLIN, MISSOURI

STONE RIP RAP SHALL BE PLACED WHERE STREAM CROSSINGS ARE INSTALLED BY TRENCHING. RIP RAP SHALL BE PLACED SO AS TO PROVIDE A TOTAL BLANKET THICKNESS OF 12" MIN., 16" MAX. RIP RAP SHALL BE PLACED FULL HEIGHT OF BANK, WITH A TOTAL WIDTH ALONG THE BANK OF 10 FT. CENTERED ON THE WATER LINE.

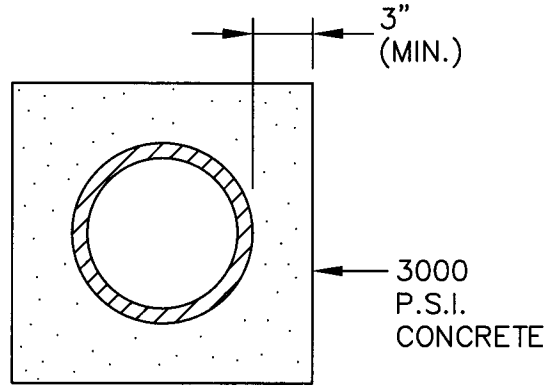

PIPE MAYBE ENCASED IN CONCRETE OR DUCTILE IRON PIPE AS STATED IN THESE SPECIFICATIONS.

SECTION

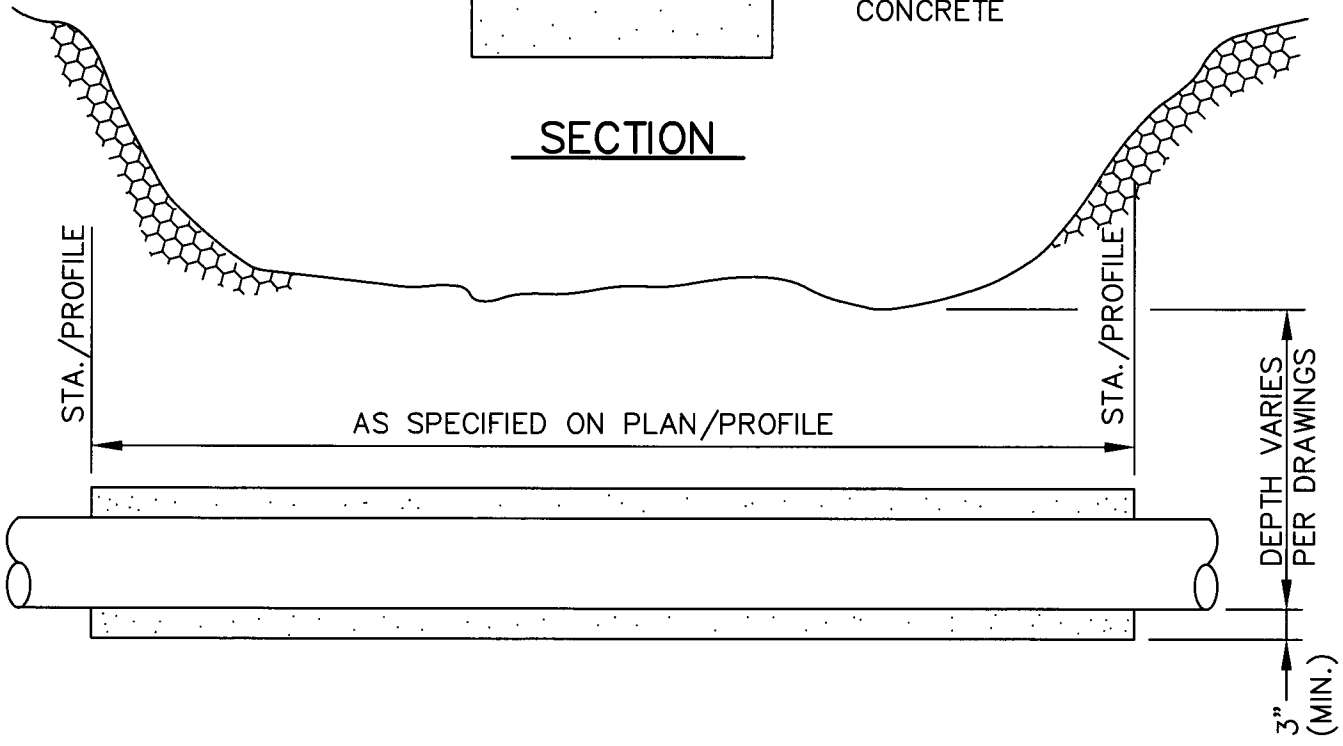

STREAM CROSSING DETAIL – SANITARY SEWER

N.T.S.

CITY OF CARL JUNCTION, MISSOURI

ALLGEIER, MARTIN & ASSOCIATES, INC.
CONSULTING ENGINEERS & SURVEYORS
JOPLIN, MISSOURI

Z:\Carl Junction MO\City of Carl Junction\Standard Specifications\Drawings\Cj-specs-TEST.dwg, 3/5/2015 3:46:06 PM

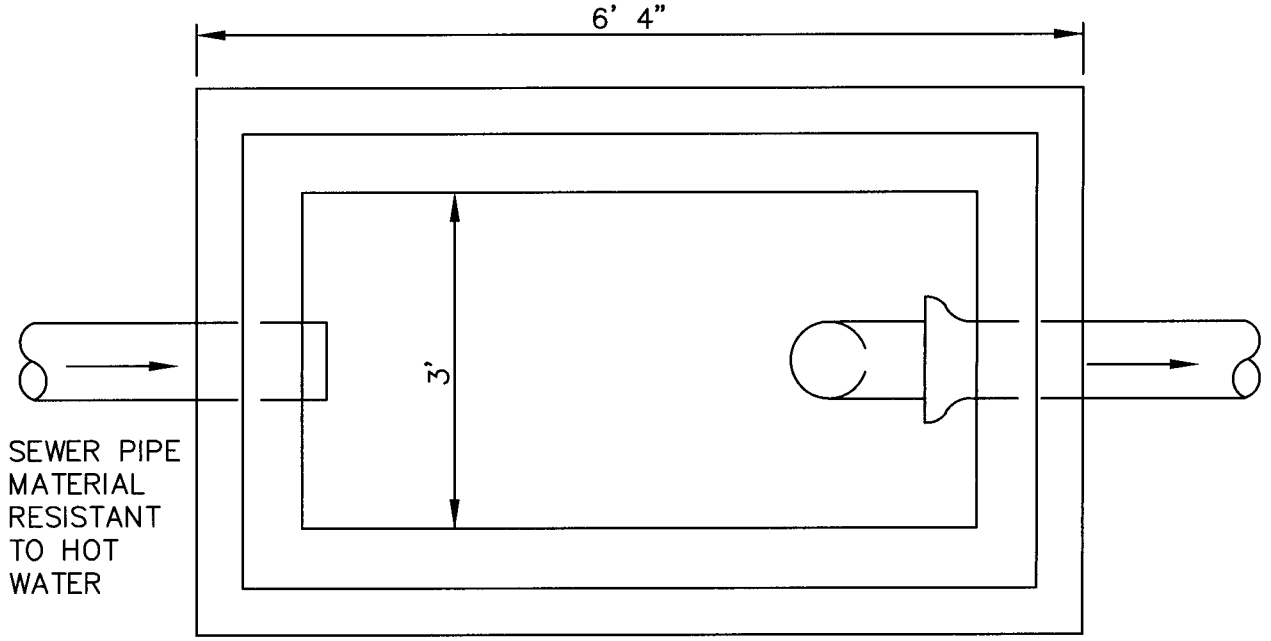

PLAN

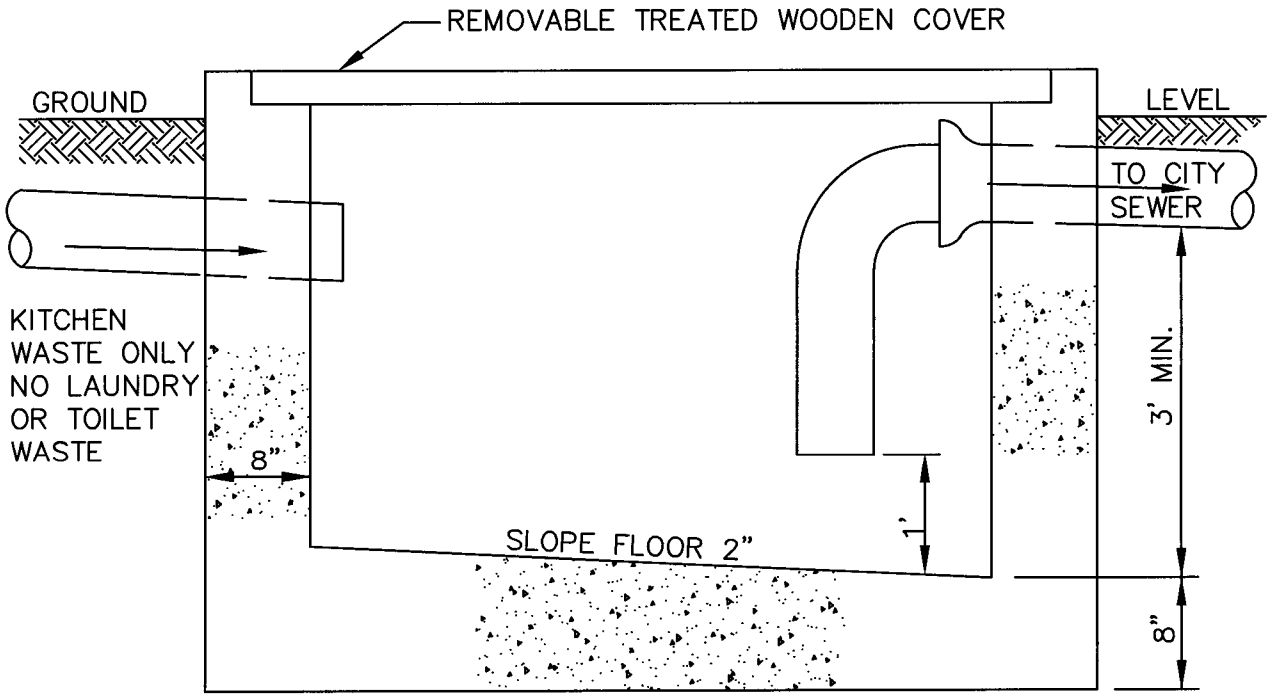

SECTION
OUTDOOR GREASE TRAP

CITY OF CARL JUNCTION, MISSOURI

ALLGEIER, MARTIN & ASSOCIATES, INC.
CONSULTING ENGINEERS & SURVEYORS
JOPLIN, MISSOURI

Z:\Carl Junction MO\City of Carl Junction\Standard Specifications\Drawings\Cj-specs-TEST.dwg, 3/5/2015 3:46:36 PM

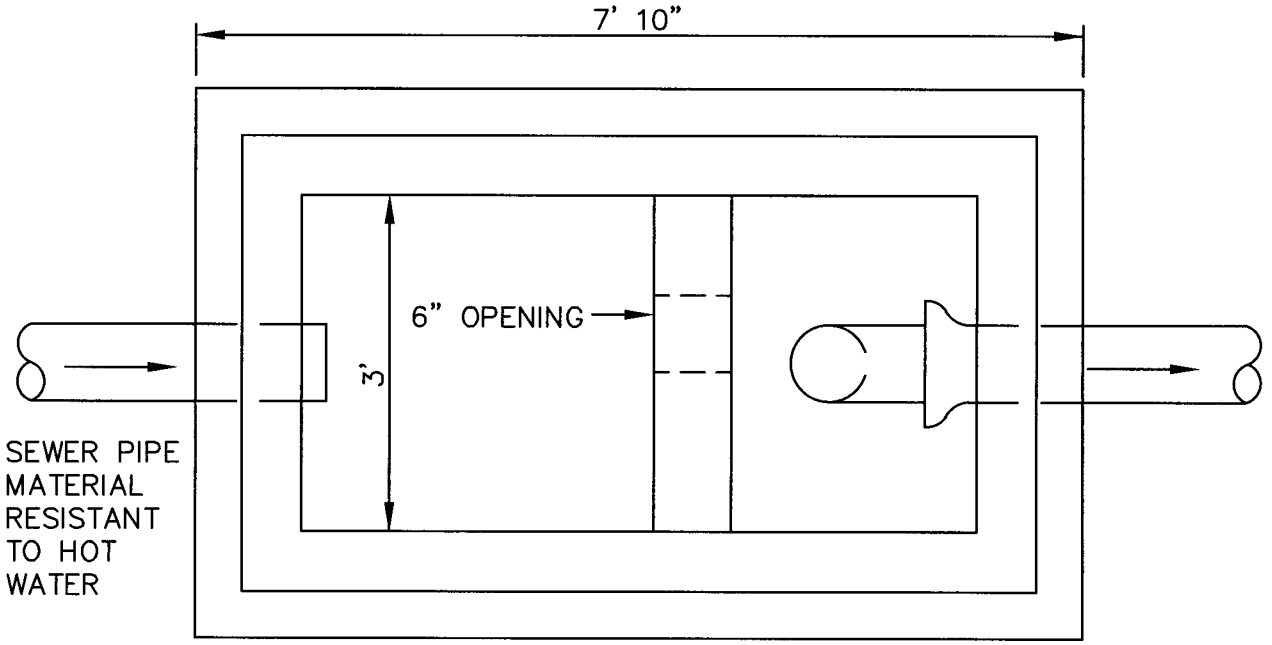

PLAN

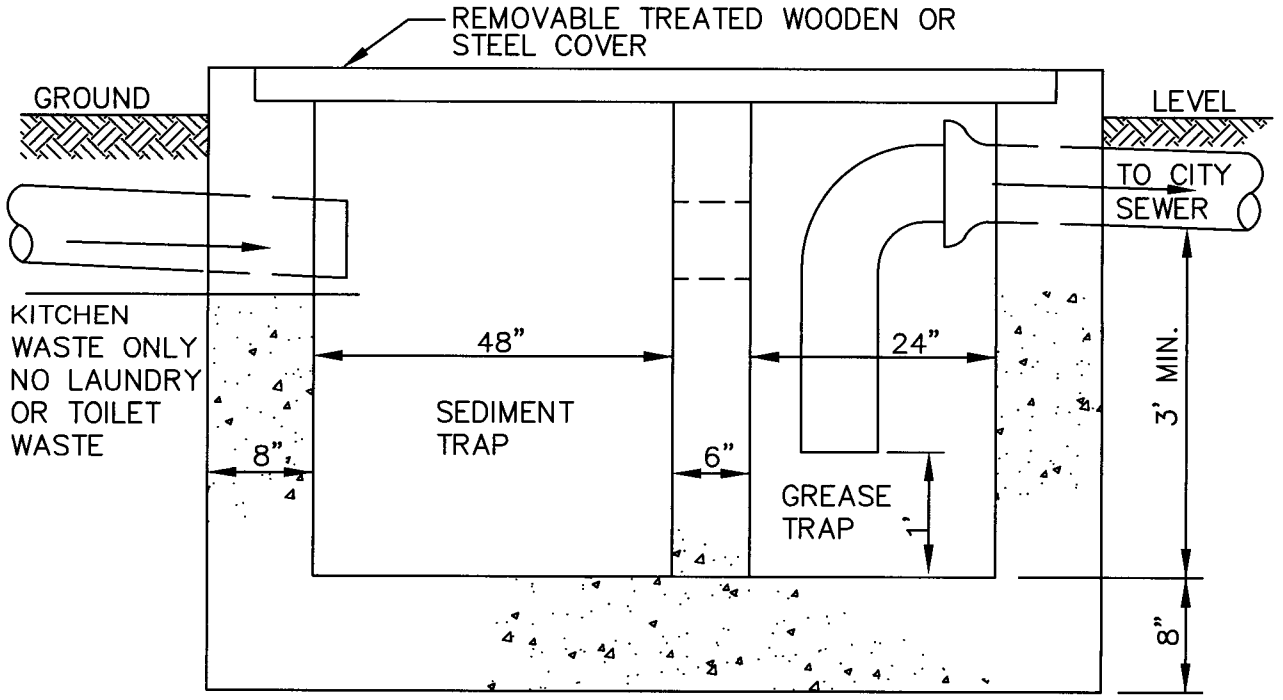

SECTION
OUTDOOR SEDIMENT GREASE TRAP

CITY OF CARL JUNCTION, MISSOURI

ALLGEIER, MARTIN & ASSOCIATES, INC.
CONSULTING ENGINEERS & SURVEYORS
JOPLIN, MISSOURI

Z:\Carl Junction MO\City of Carl Junction\Standard Specifications\Drawings\Cj-specs-TEST.dwg, 3/5/2015 3:47:18 PM

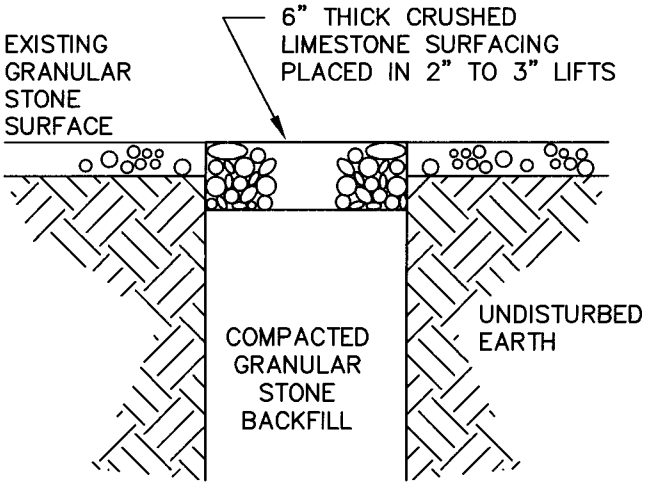

TYPE I
CRUSHED STONE SURFACING

NOTES:

PAVEMENT SHALL BE REMOVED AT THE TRENCH WIDTH AFTER THE FIRST CUT WITHOUT DAMAGE TO ADJACENT PAVEMENT.

AFTER TRENCH IS PROPERLY BACKFILLED, PAVEMENT SHALL BE CUT AND REMOVED AN ADDITIONAL 9" TO 12" ON EACH SIDE OF THE FIRST SAW CUT, AS SHOWN. THE SECOND CUT SHALL BE SAWN TO FULL DEPTH OF THE EXISTING SURFACE.

ALL EXISTING PAVEMENT SHALL BE REPLACED WITH A MINIMUM OF 6" OF CONCRETE. SPECIAL REQUEST FOR USE OF ASPHALT SHALL BE SUBMITTED IN WRITTING TO THE CITY. IF APPROVED THE CITY SHALL ISSUE A WRITTEN APPROVAL.

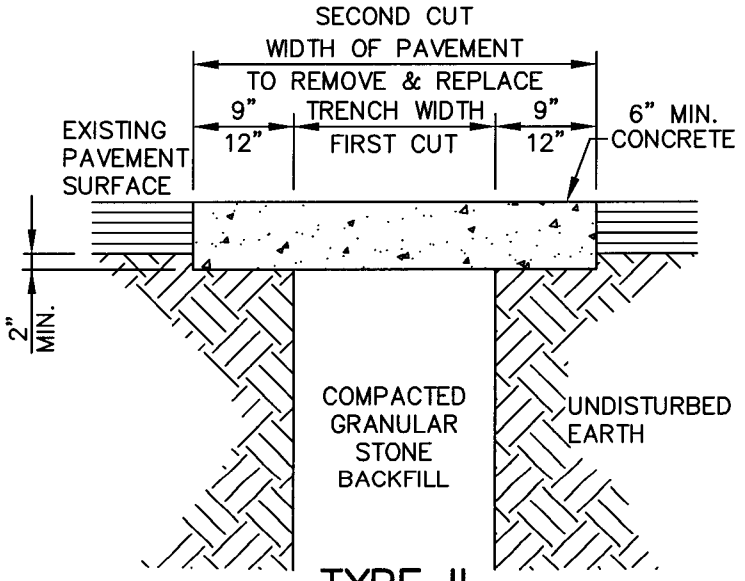

TYPE II
CONCRETE SURFACING

SEWER & WATER STREET CROSSING DETAIL

N.T.S.

CITY OF CARL JUNCTION, MISSOURI

ALLGEIER, MARTIN & ASSOCIATES, INC.
CONSULTING ENGINEERS & SURVEYORS
JOPLIN, MISSOURI

Z:\Carl Junction MO\City of Carl Junction\Standard Specifications\Drawings\Cj-specs-TEST.dwg, 3/5/2015 3:47:41 PM

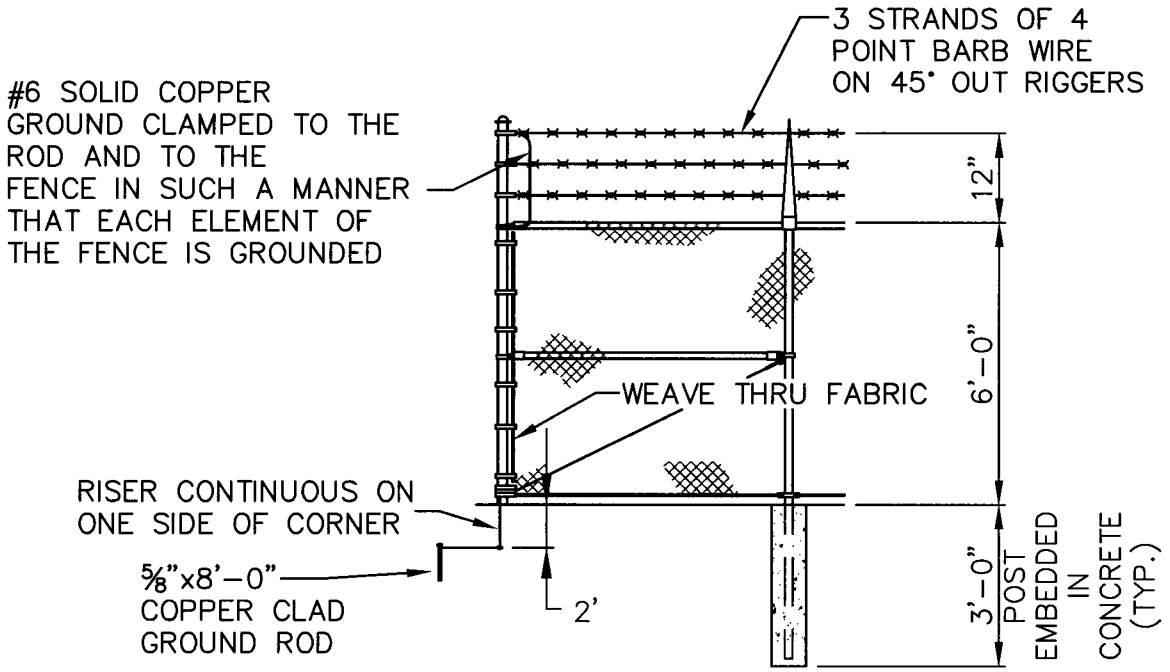

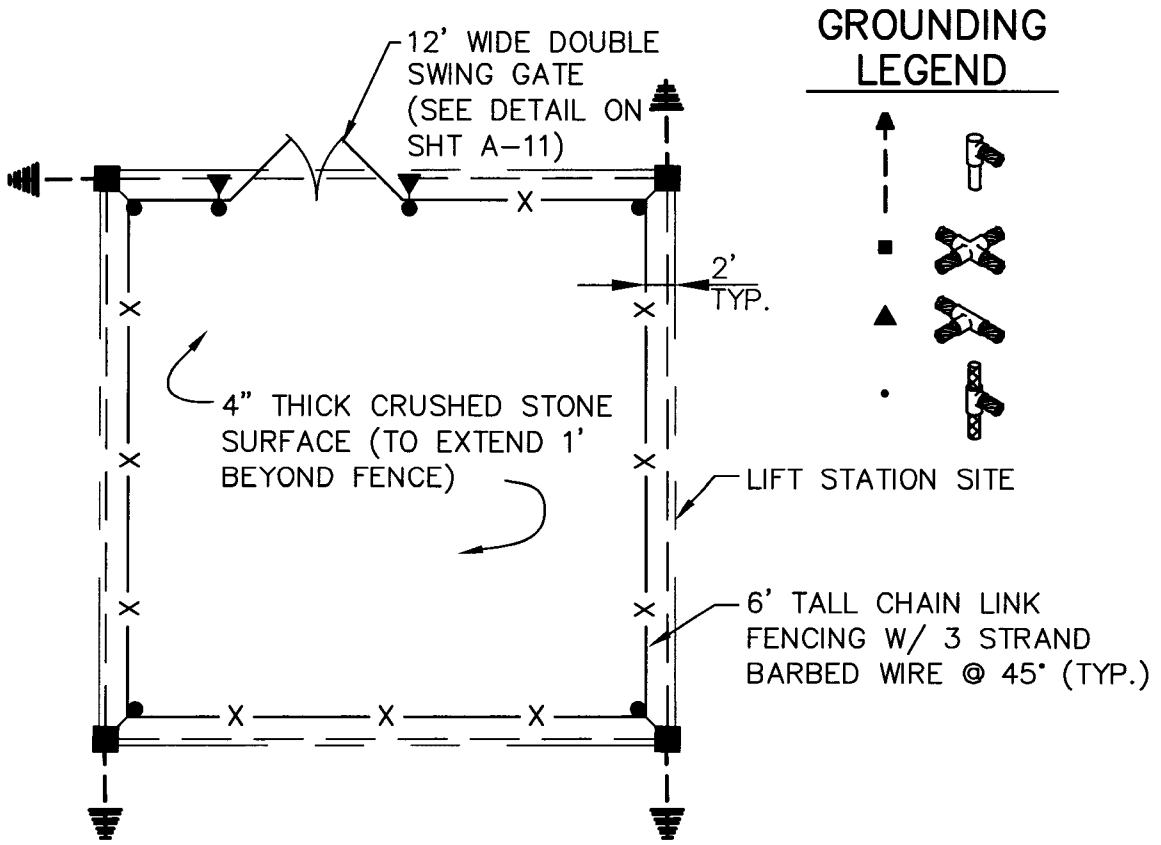

CHAIN LINK FENCE W/ GROUND DETAIL

N.T.S.

CITY OF CARL JUNCTION, MISSOURI

ALLGEIER, MARTIN & ASSOCIATES, INC.
CONSULTING ENGINEERS & SURVEYORS
JOPLIN, MISSOURI

Z:\Carl Junction MO\City of Carl Junction\Standard Specifications\Drawings\Cj-specs-TEST.dwg, 3/5/2015 3:48:08 PM

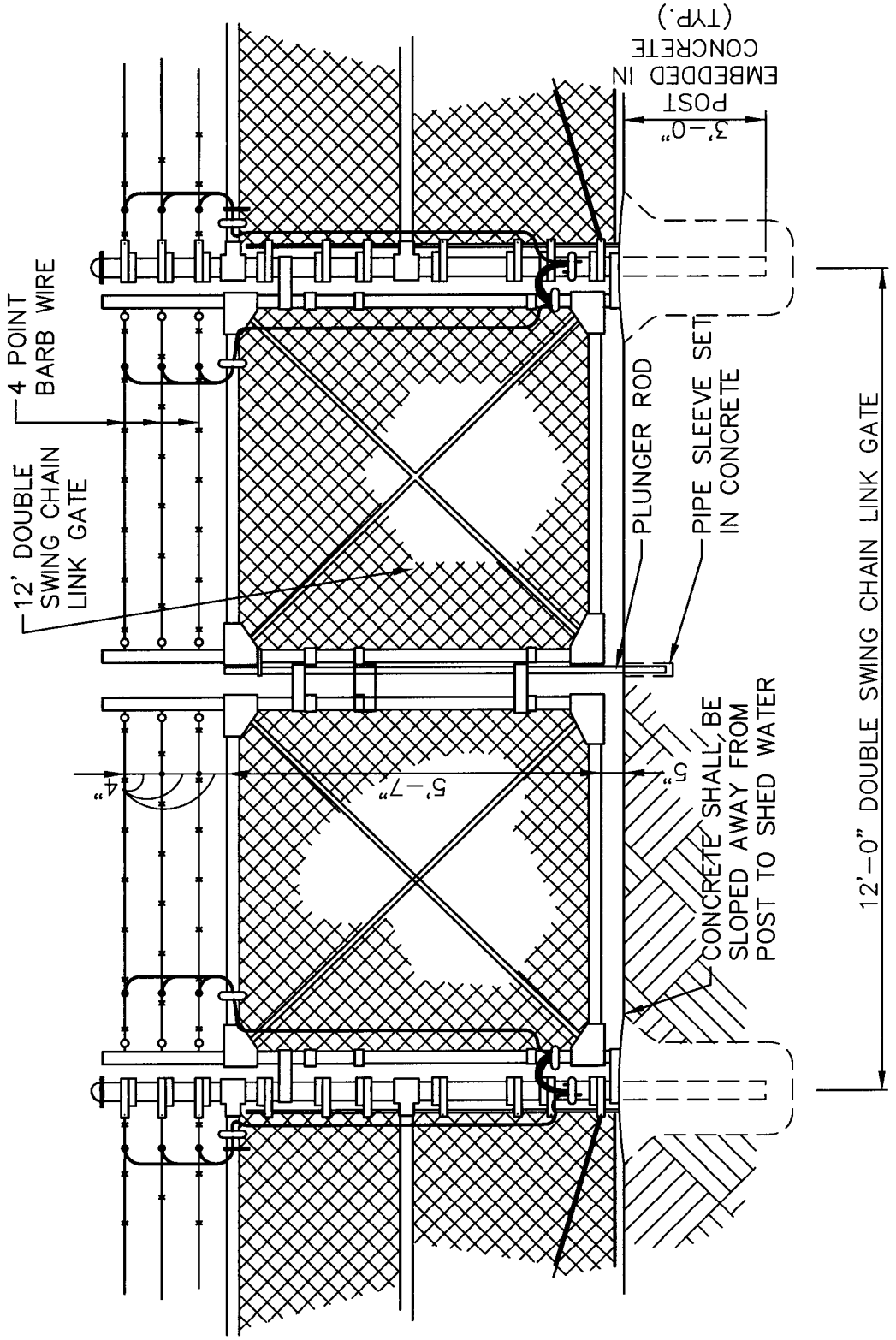

12' GATE ASSEMBLY

N.T.S.

CITY OF CARL JUNCTION, MISSOURI

ALLGEIER, MARTIN & ASSOCIATES, INC.
CONSULTING ENGINEERS & SURVEYORS
JOPLIN, MISSOURI

Z:\Carl Junction MO\City of Carl Junction\Standard Specifications\Drawings\Cj-specs-TEST.dwg, 3/5/2015 3:48:31 PM

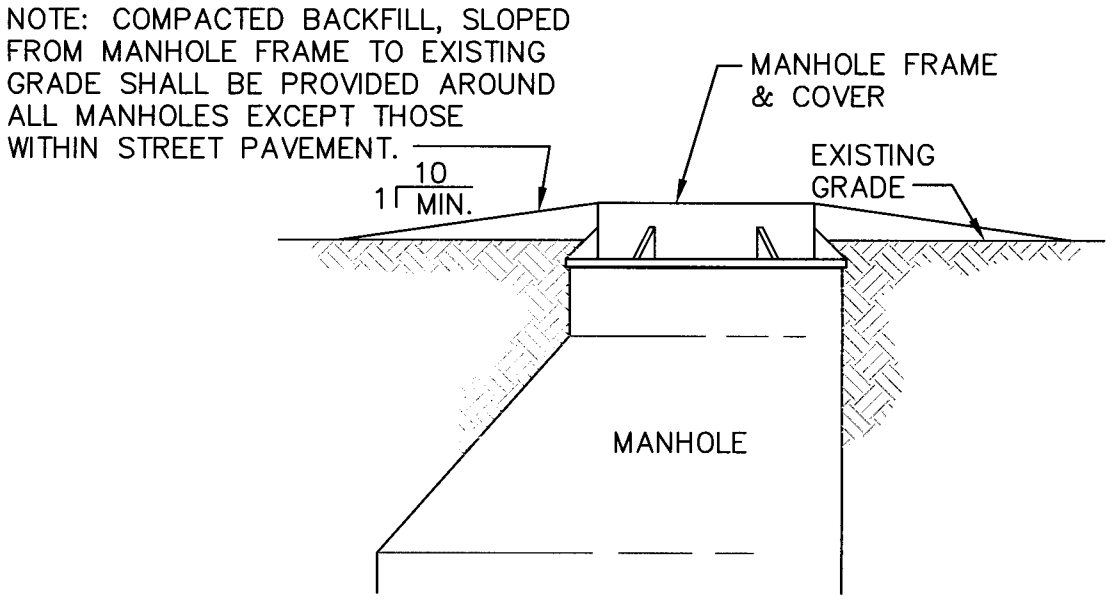

MANHOLE GRADING DETAIL

N.T.S.

CITY OF CARL JUNCTION, MISSOURI

ALLGEIER, MARTIN & ASSOCIATES, INC.
CONSULTING ENGINEERS & SURVEYORS
JOPLIN, MISSOURI

Z:\Carl Junction MO\City of Carl Junction\Standard Specifications\Drawings\Cj-specs-TEST.dwg, 3/5/2015 3:48:56 PM

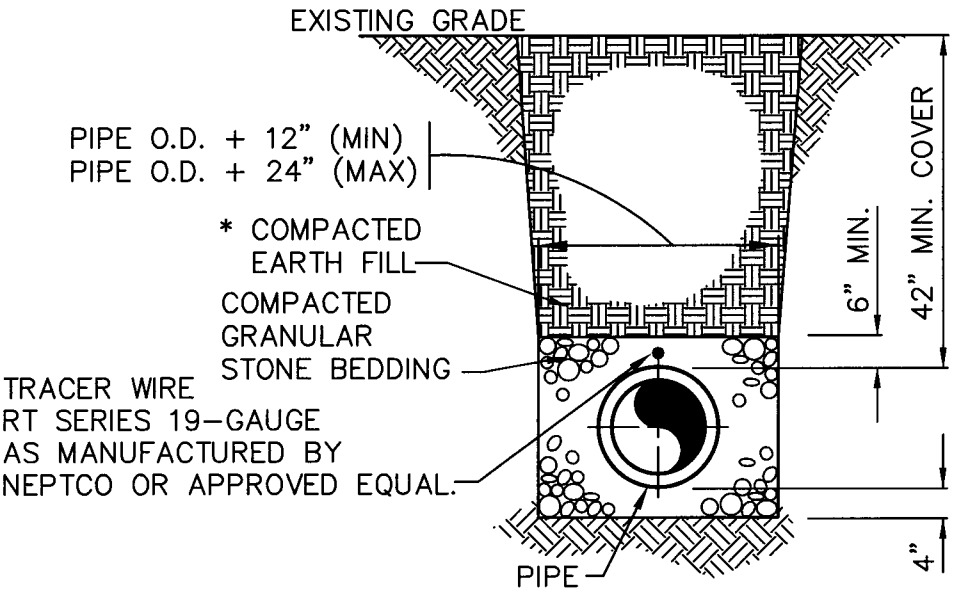

WATER LINE TRENCH & BEDDING DETAIL

N.T.S.

* NOTE: TRENCH SHALL BE BACKFILLED FULL DEPTH WITH COMPACTED GRANULAR STONE BEDDING AT ALL ROADWAY CROSSINGS.

CITY OF CARL JUNCTION, MISSOURI

ALLGEIER, MARTIN & ASSOCIATES, INC.
CONSULTING ENGINEERS & SURVEYORS
JOPLIN, MISSOURI

Z:\Carl Junction MO\City of Carl Junction\Standard Specifications\Drawings\Cj-specs-TEST.dwg, 3/5/2015 3:49:17 PM

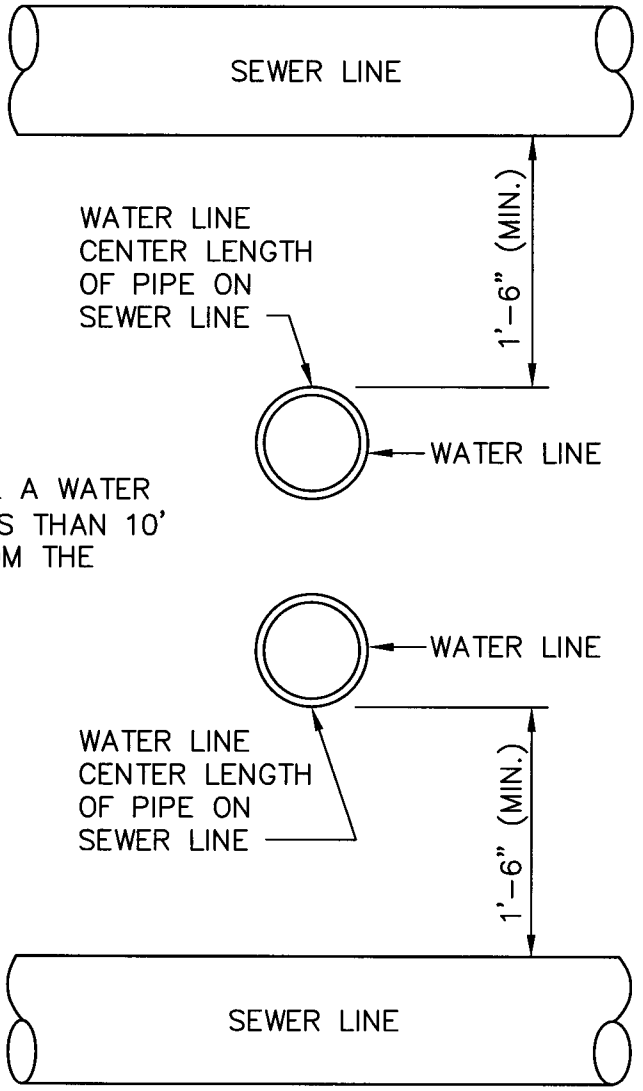

NOTE:
IN NO CASE SHALL A WATER LINE JOINT BE LESS THAN 10' HORIZONTALLY FROM THE SEWER CROSSING

WATER LINE CROSSING DETAIL

N.T.S.

CITY OF CARL JUNCTION, MISSOURI

ALLGEIER, MARTIN & ASSOCIATES, INC.
CONSULTING ENGINEERS & SURVEYORS
JOPLIN, MISSOURI

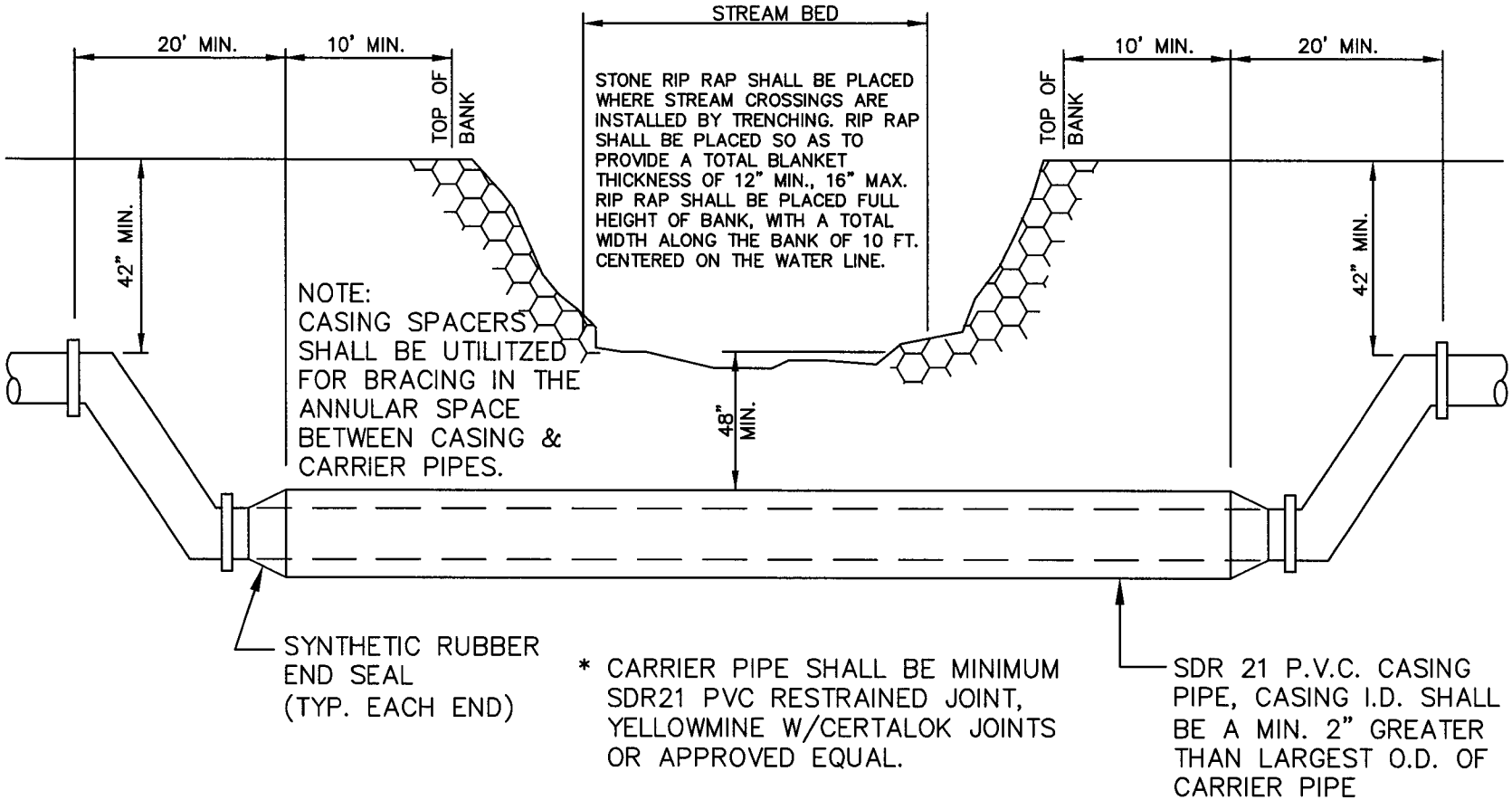

STREAM CROSSING DETAIL

POTABLE WATER

N.T.S.

CITY OF CARL JUNCTION, MISSOURI

ALLGEIER, MARTIN & ASSOCIATES, INC.
CONSULTING ENGINEERS & SURVEYORS
JOPLIN, MISSOURI

CITY OF CARL JUNCTION, MISSOURI

ALLGEIER, MARTIN & ASSOCIATES, INC.
CONSULTING ENGINEERS & SURVEYORS
JOPLIN, MISSOURI

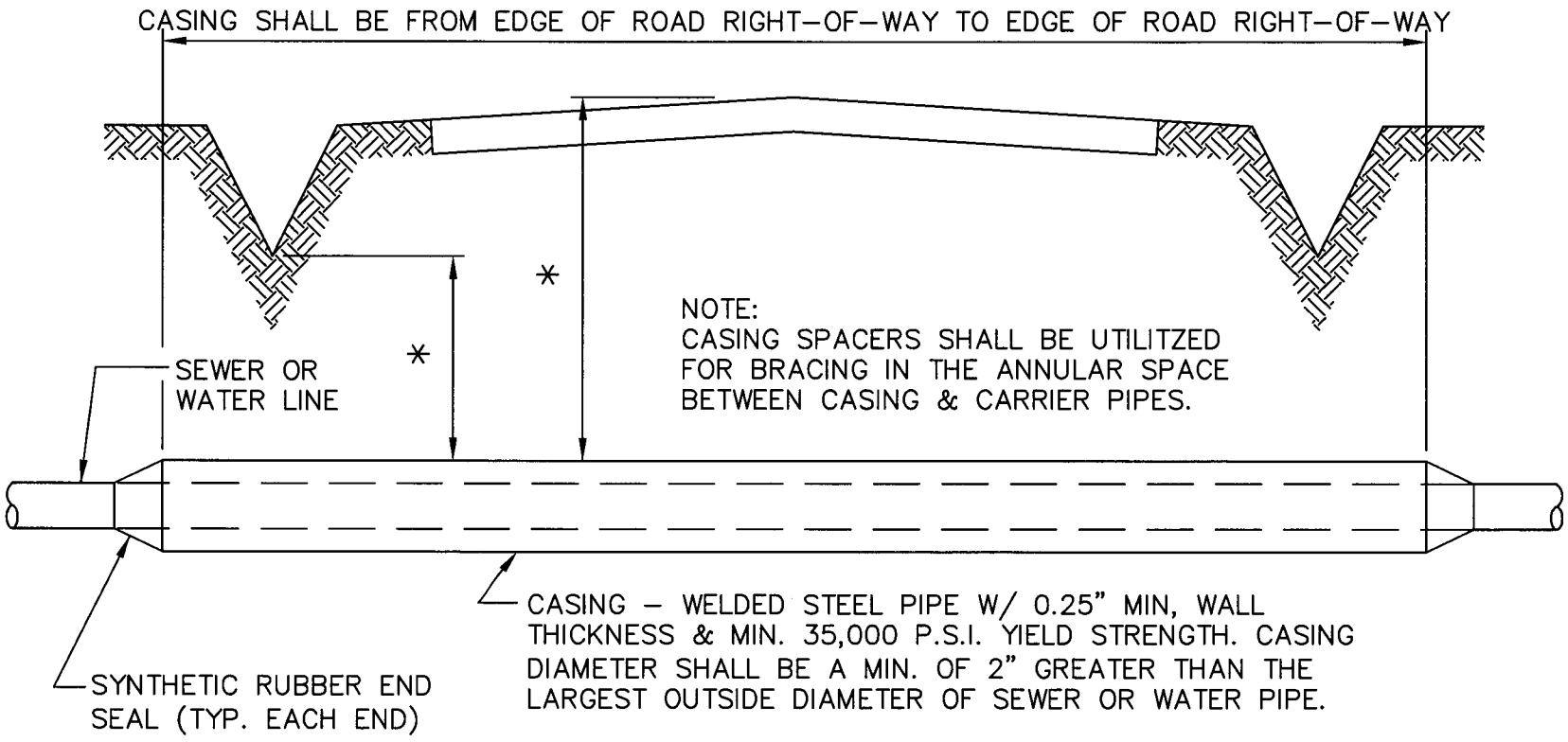

* – MIN. DEPTH OF COVER SHALL BE 5' BELOW CROWN GRADE OR 3' BELOW DITCH GRADE, WHICHEVER SHALL GOVERN.

HIGHWAY CROSSING DETAIL

N.T.S.

Z:\Carl Junction MO\City of Carl Junction\Standard Specifications\Drawings\Cj-specs-TEST.dwg, 3/5/2015 3:50:33 PM

NOTE:
CONTRACTOR SHALL FIELD VERIFY TYPE & SIZE OF EXISTING PIPES TO BE TAPPED

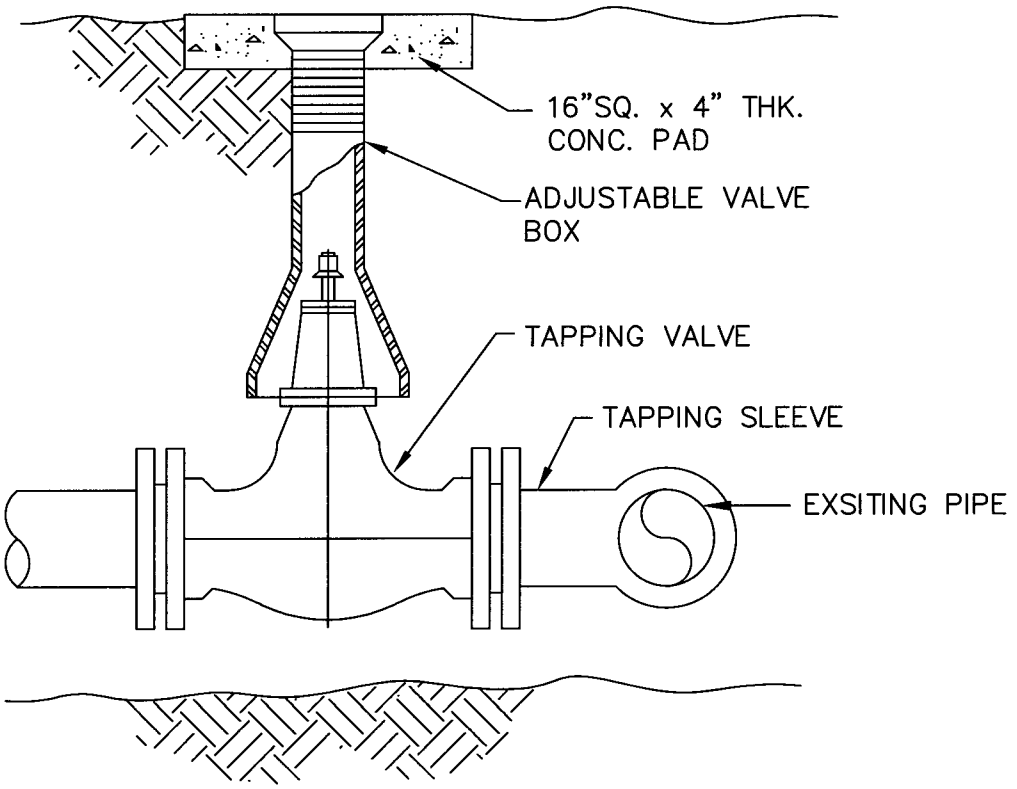

TAPPING VALVE & SLEEVE INSTALLATION

CITY OF CARL JUNCTION, MISSOURI

ALLGEIER, MARTIN & ASSOCIATES, INC.
CONSULTING ENGINEERS & SURVEYORS
JOPLIN, MISSOURI

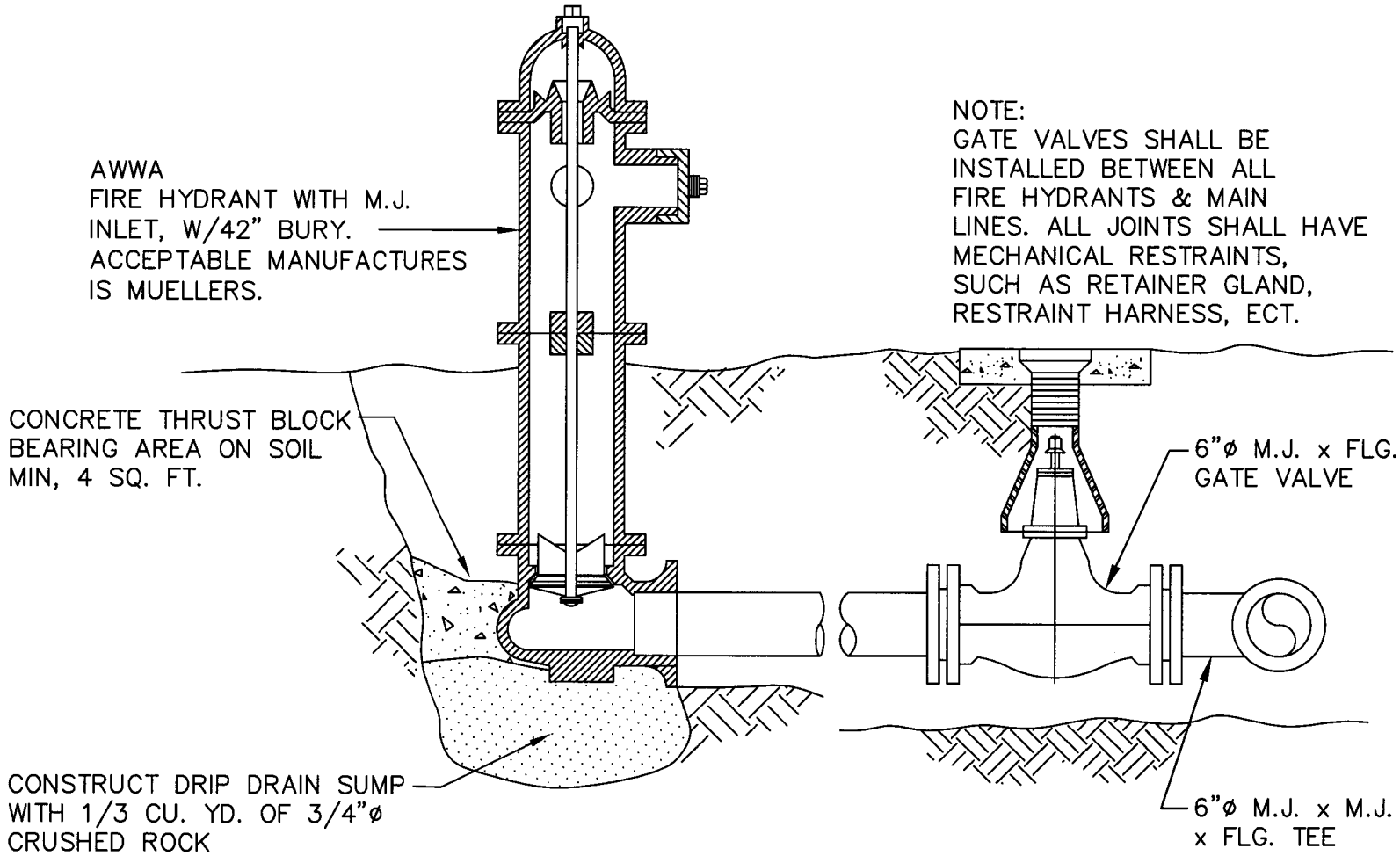

FIRE HYDRANT INSTALLATION

N.T.S.

CITY OF CARL JUNCTION, MISSOURI

ALLGEIER, MARTIN & ASSOCIATES, INC.
CONSULTING ENGINEERS & SURVEYORS
JOPLIN, MISSOURI

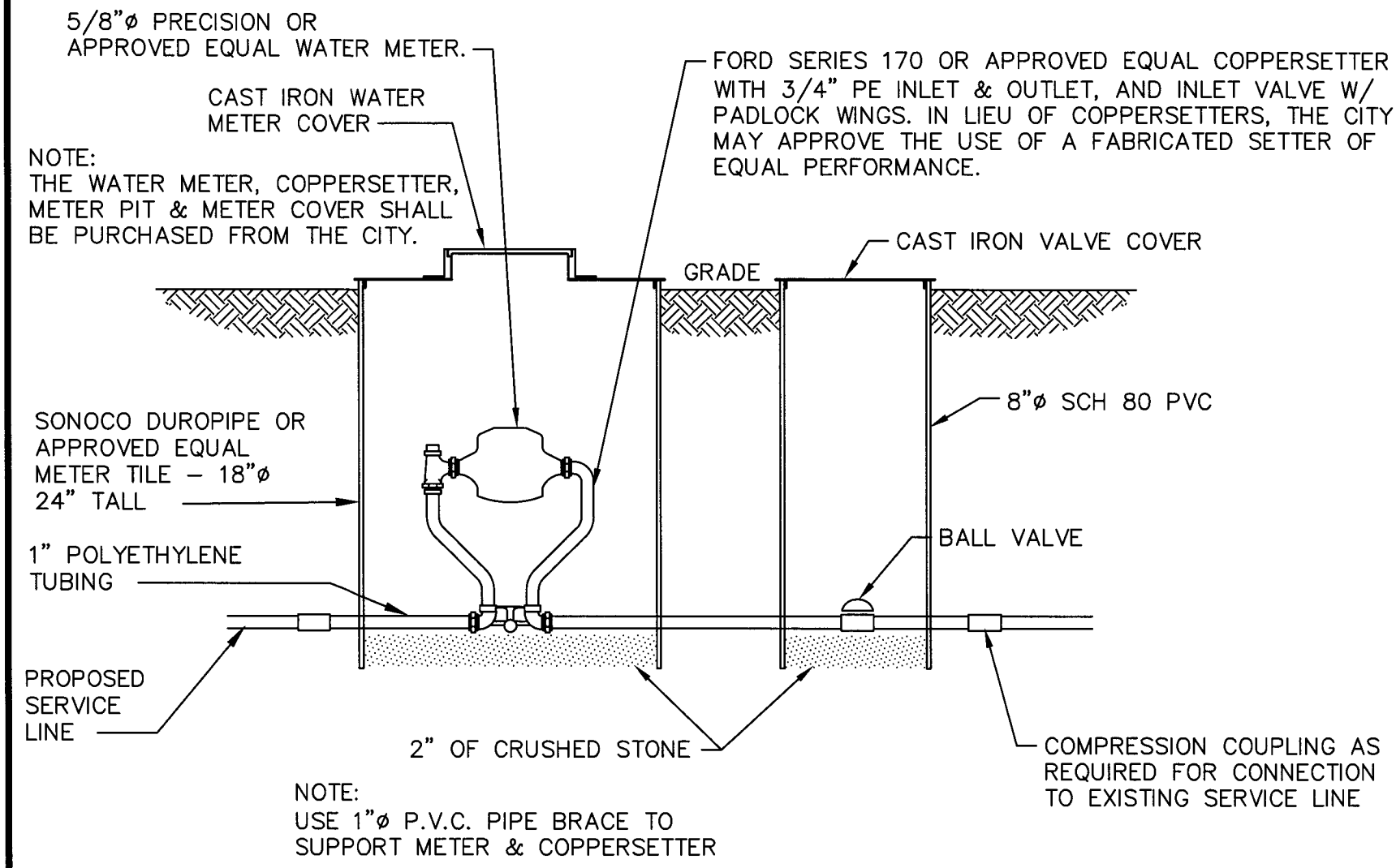

WATER METER INSTALLATION DETAIL

CITY OF CARL JUNCTION, MISSOURI

ALLGEIER, MARTIN & ASSOCIATES, INC.
CONSULTING ENGINEERS & SURVEYORS
JOPLIN, MISSOURI

Z:\Carl Junction MO\City of Carl Junction\Standard Specifications\Drawings\Cj-specs-TEST.dwg, 3/5/2015 3:52:02 PM

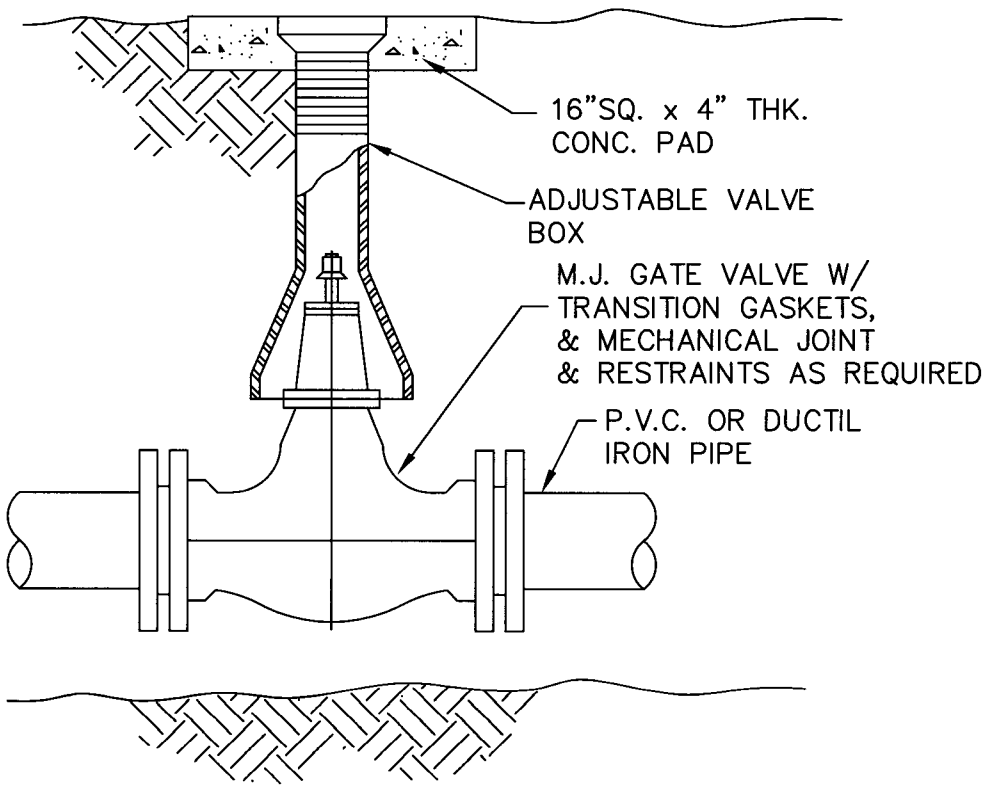

GATE VALVE INSTALLATION

CITY OF CARL JUNCTION, MISSOURI

ALLGEIER, MARTIN & ASSOCIATES, INC.
CONSULTING ENGINEERS & SURVEYORS
JOPLIN, MISSOURI

Z:\Carl Junction MO\City of Carl Junction\Standard Specifications\Drawings\Cj-specs-TEST.dwg, 3/5/2015 3:52:22 PM

NOTES:

MECHANICAL JOINT RESTRAINTS, SUCH AS A RETAINER GLAND, RESTRAINT HARNESS, ECT., MUST BE USED. CONCRETE THRUST BLOCKS SHALL NOT BE USED UNLESS APPROVED BY CITY IN WRITTING.

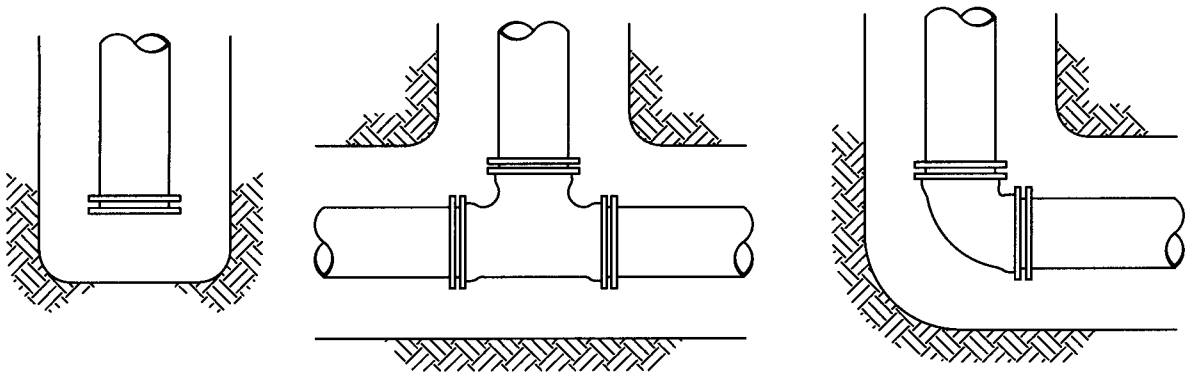

THE LENGTH OF RESTRAINED PIPE JOINTS BEYOND THE FITTING SHALL BE AS REQUIRED BY THE JOINT RESTRAINT MANUFACTURER INSTALLATION INSTRUCTIONS AND IN ACCORDANCE WITH RECOGNIZED UNDERGROUND RESTRAINED JOINT PIPING SYSTEM EQUATIONS UTILIZING CONSERVATIVE SOIL PARAMETERS.

MECHANICAL JOINT RESTRAINTS

N.T.S.

CITY OF CARL JUNCTION, MISSOURI

ALLGEIER, MARTIN & ASSOCIATES, INC.
CONSULTING ENGINEERS & SURVEYORS
JOPLIN, MISSOURI

Z:\Carl Junction MO\City of Carl Junction\Standard Specifications\Drawings\Cj-specs-TEST.dwg, 3/5/2015 3:52:45 PM

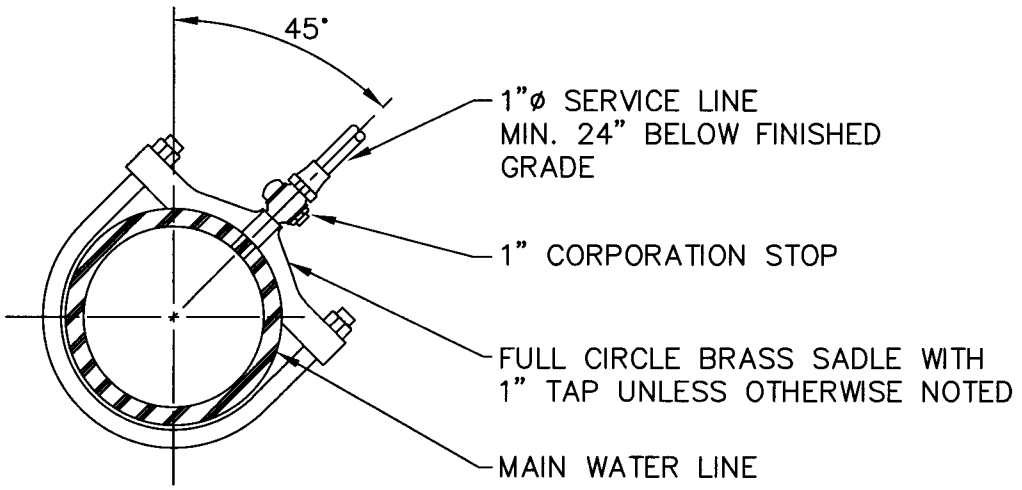

SERVICE TAP DETAIL

N.T.S.

CITY OF CARL JUNCTION, MISSOURI

ALLGEIER, MARTIN & ASSOCIATES, INC.
CONSULTING ENGINEERS & SURVEYORS
JOPLIN, MISSOURI

Z:\Carl Junction MO\City of Carl Junction\Standard Specifications\Drawings\Cj-specs-TEST.dwg, 3/5/2015 3:53:09 PM

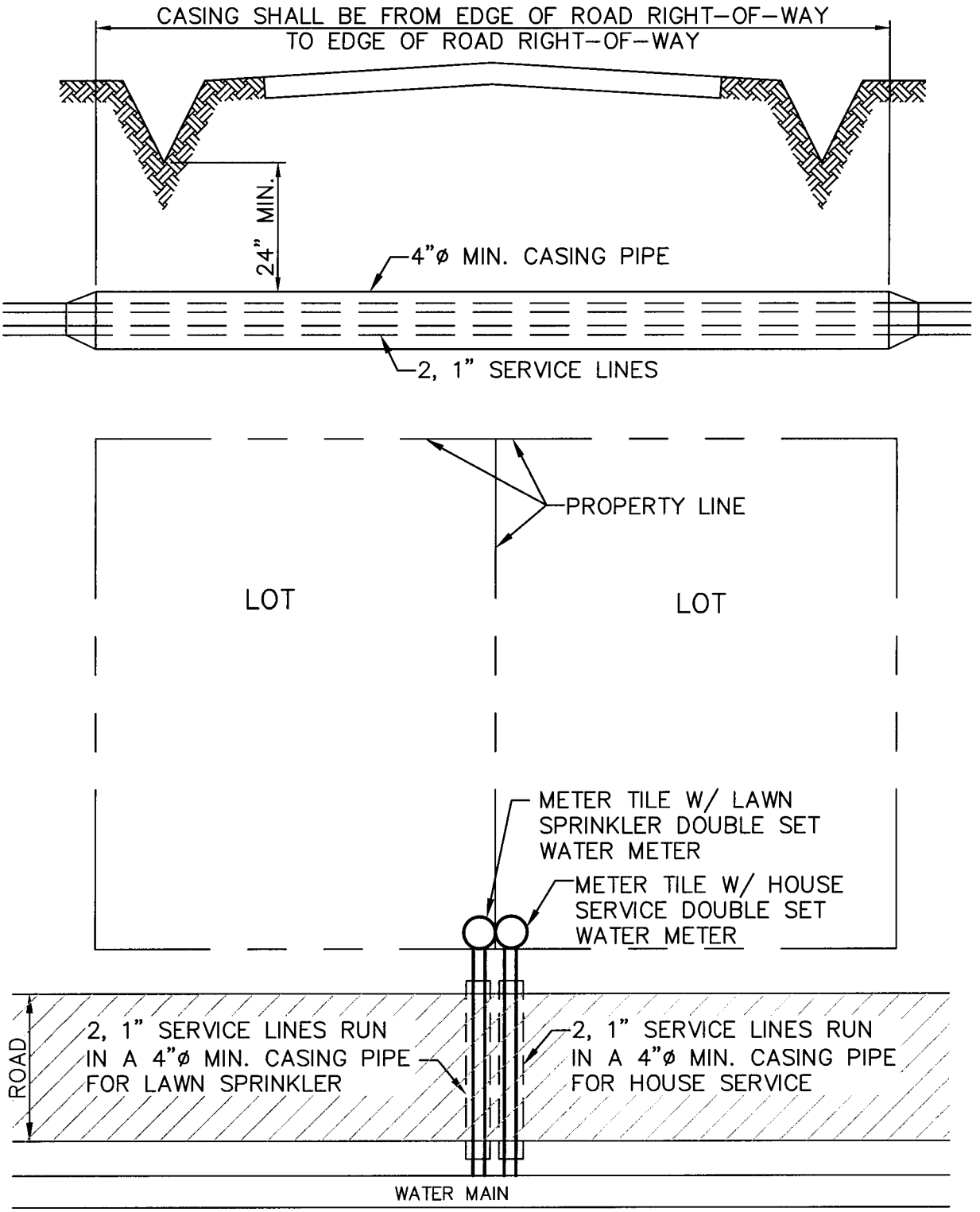

DOUBLE SET METER & SERVICE LINE CROSSING ROADWAY

N.T.S.

CITY OF CARL JUNCTION, MISSOURI

ALLGEIER, MARTIN & ASSOCIATES, INC.
CONSULTING ENGINEERS & SURVEYORS
JOPLIN, MISSOURI

Z:\Carl Junction MO\City of Carl Junction\Standard Specifications\Drawings\Cj-specs-TEST.dwg, 3/5/2015 3:53:36 PM

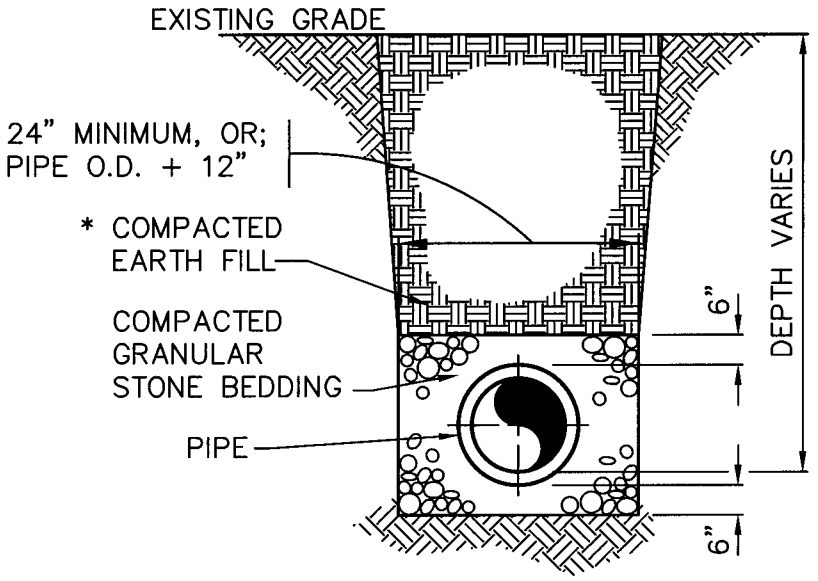

STORM SEWER TRENCH & BEDDING DETAIL

N.T.S.

* NOTE: TRENCH SHALL BE BACKFILLED FULL DEPTH WITH COMPACTED GRANULAR STONE BEDDING AT ALL ROADWAY CROSSINGS.

CITY OF CARL JUNCTION, MISSOURI

ALLGEIER, MARTIN & ASSOCIATES, INC.
CONSULTING ENGINEERS & SURVEYORS
JOPLIN, MISSOURI

Z:\Carl Junction MO\City of Carl Junction\Standard Specifications\Drawings\Cj-specs-TEST.dwg, 3/5/2015 3:53:55 PM

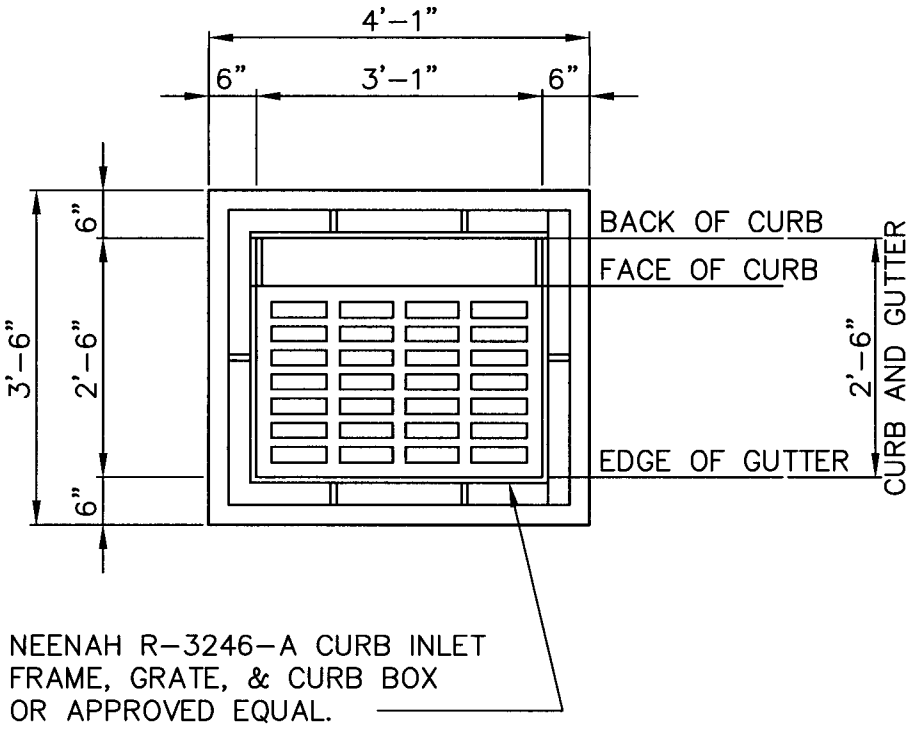

SINGLE DROP INLET PLAN

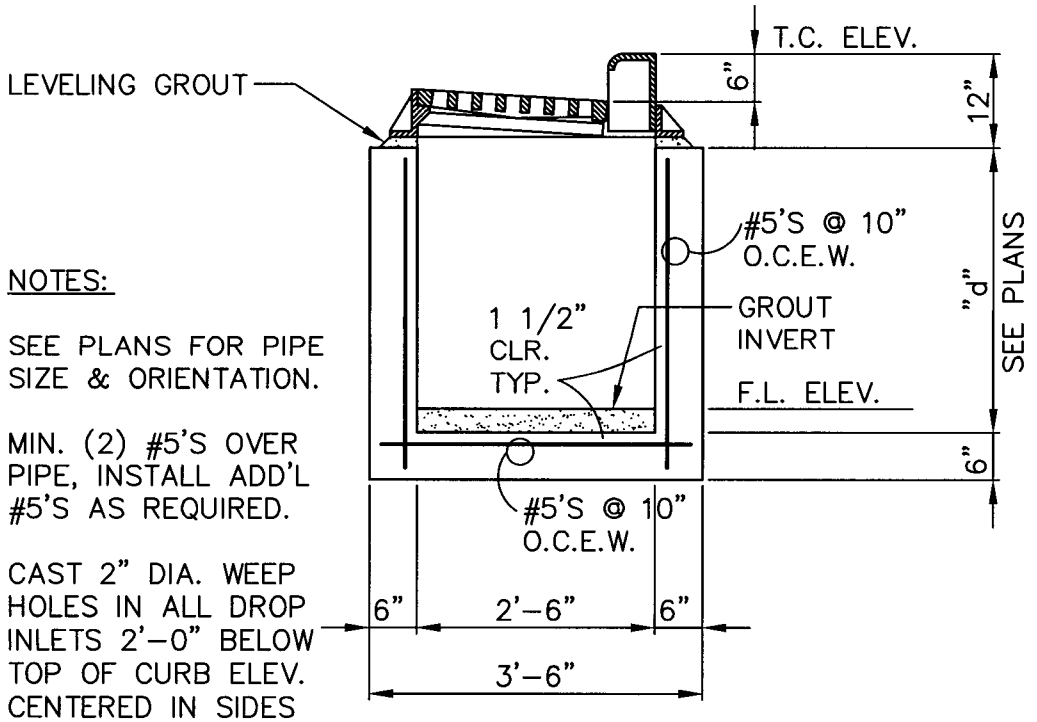

NOTES:

SEE PLANS FOR PIPE SIZE & ORIENTATION.

MIN. (2) #5'S OVER PIPE, INSTALL ADD'L #5'S AS REQUIRED.

CAST 2" DIA. WEEP HOLES IN ALL DROP INLETS 2'-0" BELOW TOP OF CURB ELEV. CENTERED IN SIDES UNDER CONC. CURB & GUTTER.

DROP INLET – TYPICAL SECTION

CITY OF CARL JUNCTION, MISSOURI

ALLGEIER, MARTIN & ASSOCIATES, INC.
CONSULTING ENGINEERS & SURVEYORS
JOPLIN, MISSOURI

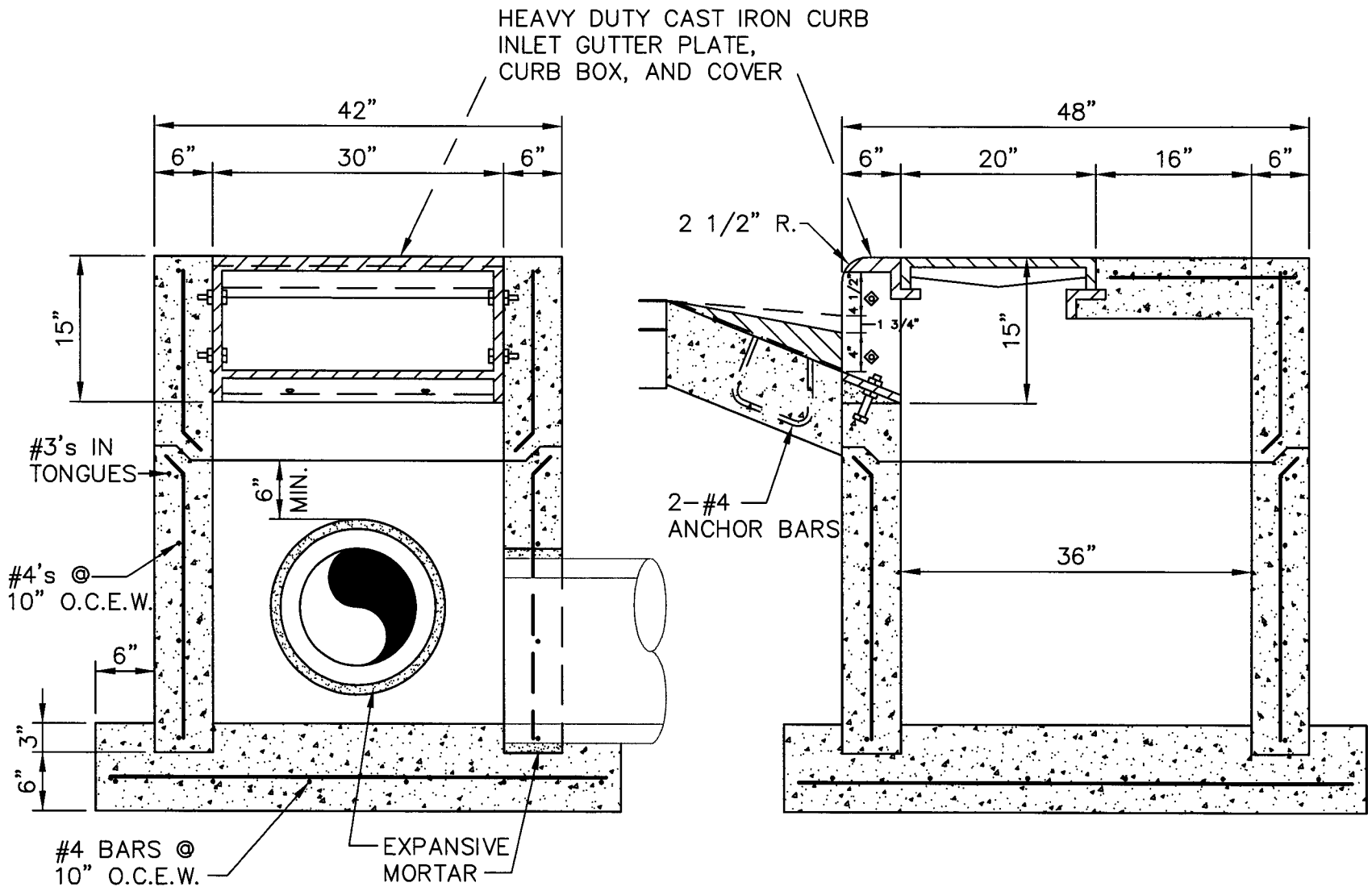

FRONT VIEW

SIDE VIEW

TYPE "B" SINGLE CURB INLET DETAIL

N.T.S.

CITY OF CARL JUNCTION, MISSOURI

ALLGEIER, MARTIN & ASSOCIATES, INC.

CONSULTING ENGINEERS & SURVEYORS

JOPLIN, MISSOURI

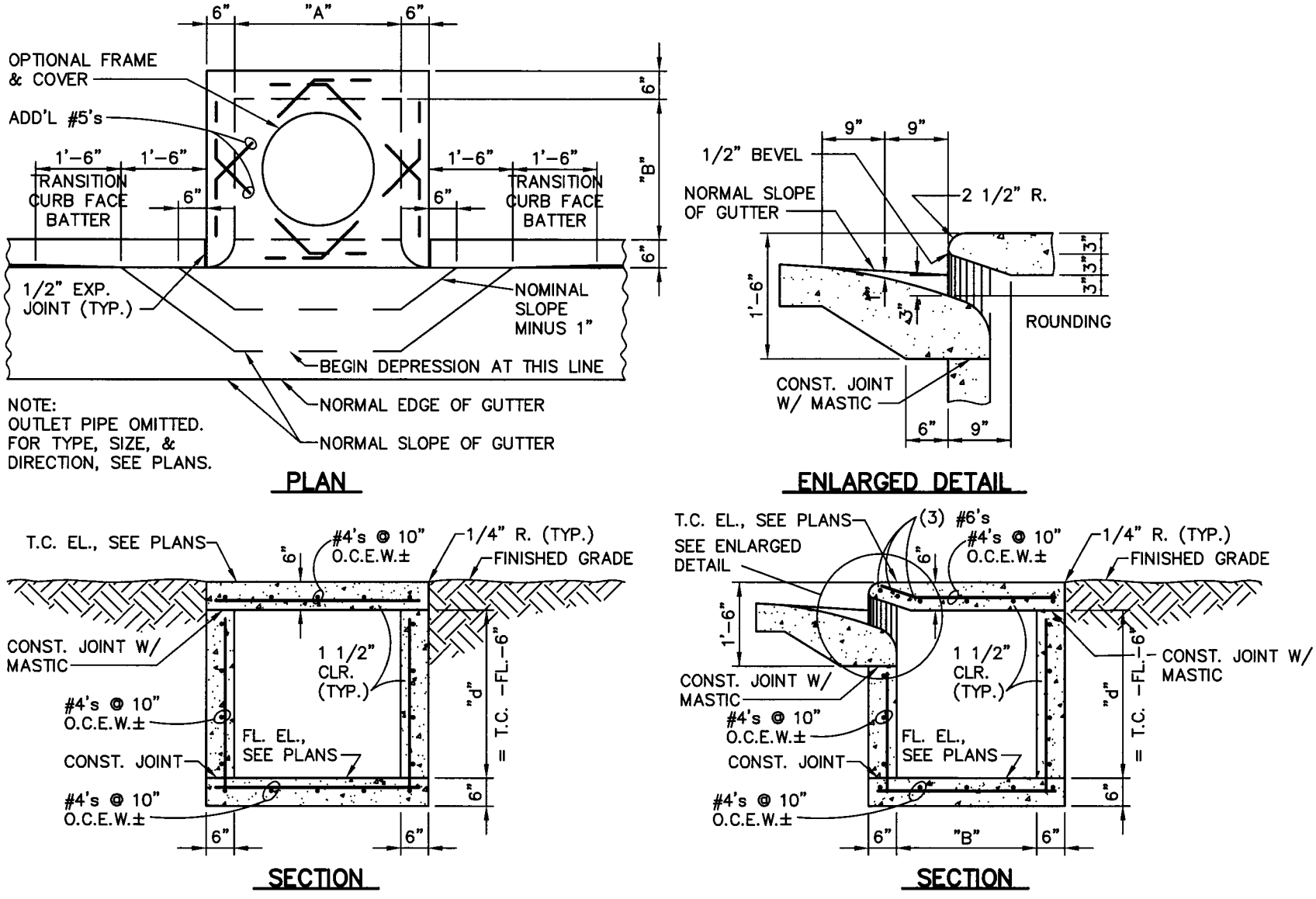

TYPE "T" DROP INLET DETAIL

N.T.S.

CITY OF CARL JUNCTION, MISSOURI

ALLGEIER, MARTIN & ASSOCIATES, INC.

CONSULTING ENGINEERS & SURVEYORS

JOPLIN, MISSOURI

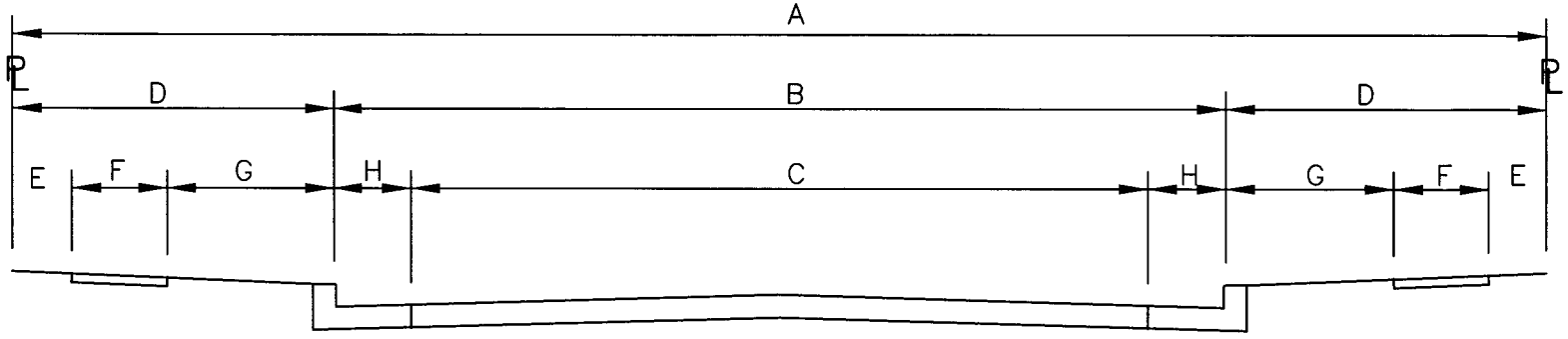

A	B	C	D	E	F	G	H	CROWN
60' STREET	40'	36'	10'	1'	5'	4'	2'	0.42
60' STREET	30'	26'	15'	1'	5'	9'	2'	0.33
50' STREET	40'	36'	5'	0'	4.5'	0.5'	2'	0.42
50' STREET	30'	26'	10'	1'	5'	5'	2'	0.33

STANDARD DIMENSIONS

CITY OF CARL JUNCTION, MISSOURI

ALLGEIER, MARTIN & ASSOCIATES, INC.
CONSULTING ENGINEERS & SURVEYORS
JOPLIN, MISSOURI

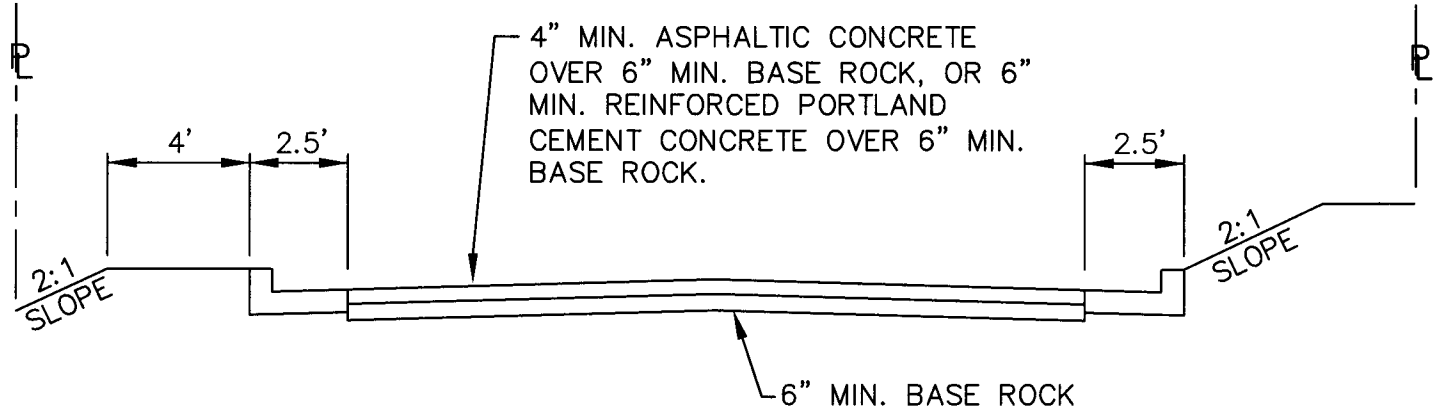

NOTES:

1. BACKFILL BEHIND CURB WITH MINIMUM OF 2" HAND RAKED BLACK DIRT
2. CONTRACTOR SHALL GRADE EXISTING DRIVES TO MEET NEW PAVEMENT.
3. CONCRETE SHALL BE REINFORCED WITH (1) LAYER OF WELDED WIRE FABRIC AS A MINIMUM.

TYPICAL SECTION

CITY OF CARL JUNCTION, MISSOURI

ALLGEIER, MARTIN & ASSOCIATES, INC.
CONSULTING ENGINEERS & SURVEYORS
JOPLIN, MISSOURI

Z:\Carl Junction MO\City of Carl Junction\Standard Specifications\Drawings\Cj-specs-TEST.dwg, 3/5/2015 3:55:55 PM

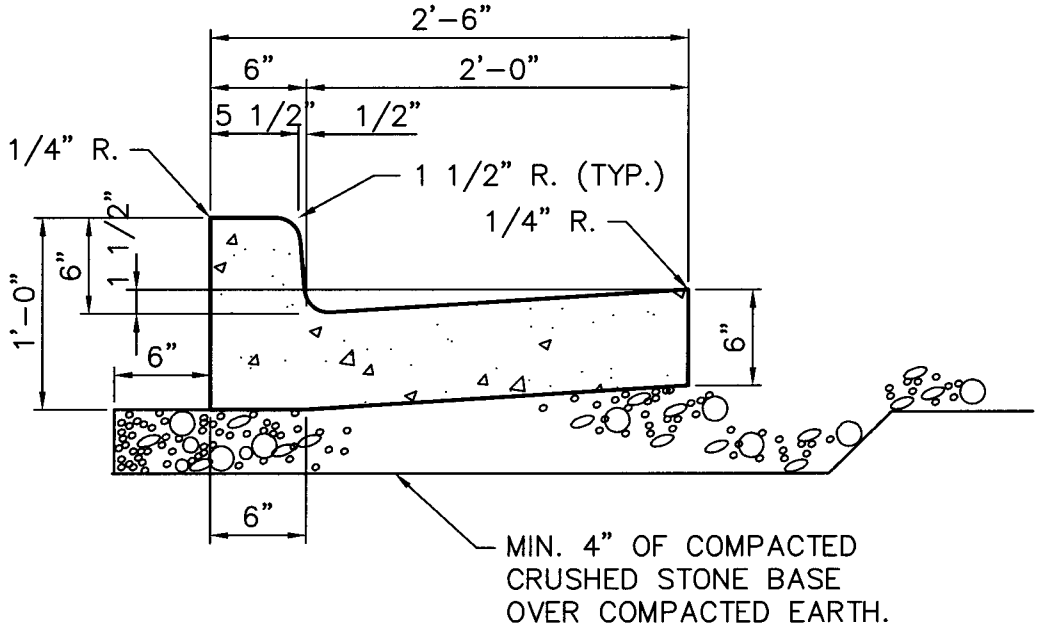

NOTES:

1. CRACK CONTROL SHALL BE SAWED AT INTERVALS OF 10 FEET MAXIMUM AND WITHIN 48 HOURS AFTER PLACEMENT.

2. JOINT TO EXTEND THRU CURB & GUTTER, FRONT TO BACK.

3. ALL SAW JOINTS SHALL BE 3/8" WIDE BY 2" DEEP AND FILLED WITH AN APPROVED JOINT FILLER MATERIAL.

2'-6" STD. CURB & GUTTER DETAIL

CITY OF CARL JUNCTION, MISSOURI

ALLGEIER, MARTIN & ASSOCIATES, INC.
CONSULTING ENGINEERS & SURVEYORS
JOPLIN, MISSOURI

Z:\Carl Junction MO\City of Carl Junction\Standard Specifications\Drawings\Cj-specs-TEST.dwg, 3/5/2015 3:56:14 PM

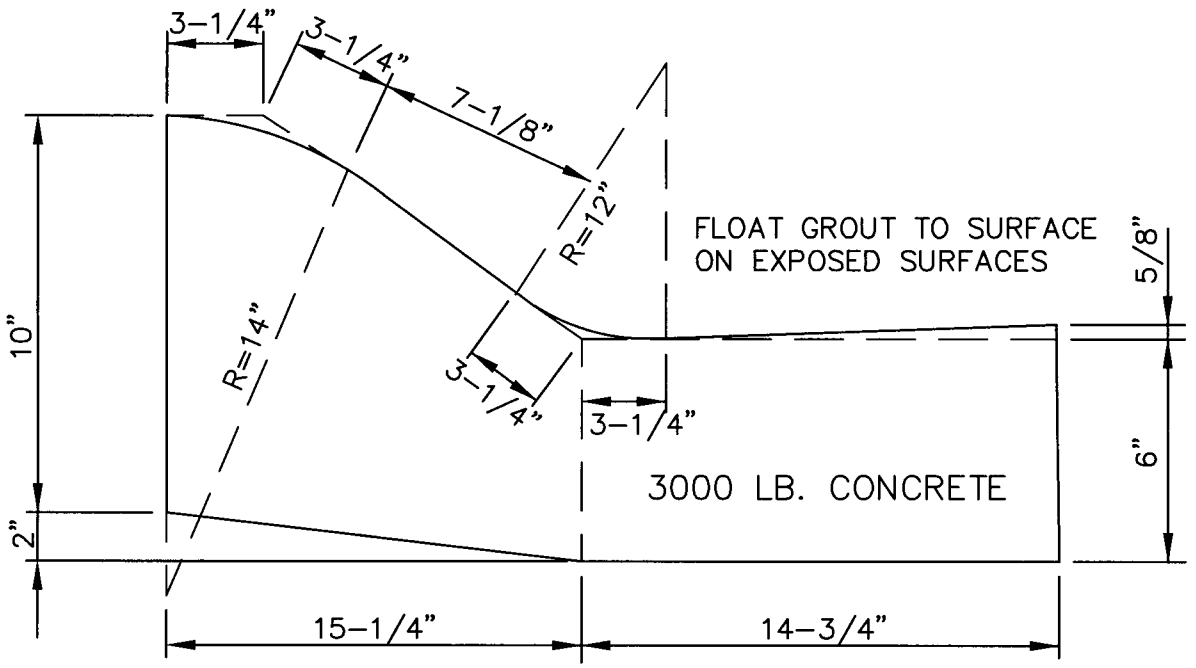

4" MIN. COMPACTED CRUSHED STONE
BASE OVER COMPACTED EARTH.

NOTES:

1. CRACK CONTROL SHALL BE SAWED AT INTERVALS OF 10 FEET MAXIMUM AND WITHIN 48 HOURS AFTER PLACEMENT.
2. JOINT TO EXTEND THRU CURB & GUTTER, FRONT TO BACK.
3. ALL SAW JOINTS SHALL BE 3/8" WIDE BY 2" DEEP AND FILLED WITH AN APPROVED JOINT FILLER MATERIAL.

MOUNTABLE CURB & GUTTER

CITY OF CARL JUNCTION, MISSOURI

ALLGEIER, MARTIN & ASSOCIATES, INC.
CONSULTING ENGINEERS & SURVEYORS
JOPLIN, MISSOURI

Z:\Carl Junction MO\City of Carl Junction\Standard Specifications\Drawings\Cj-specs-TEST.dwg, 3/5/2015 3:56:32 PM

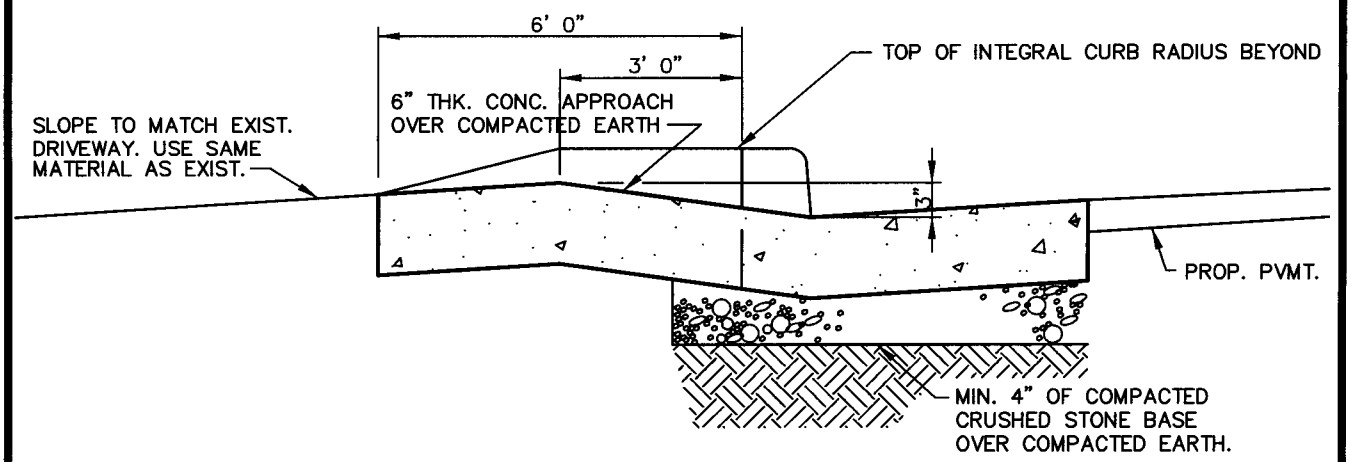

MODIFIED INTEGRAL CONC. APPROACH, CURB RADII, & GUTTER DETAIL

N.T.S.

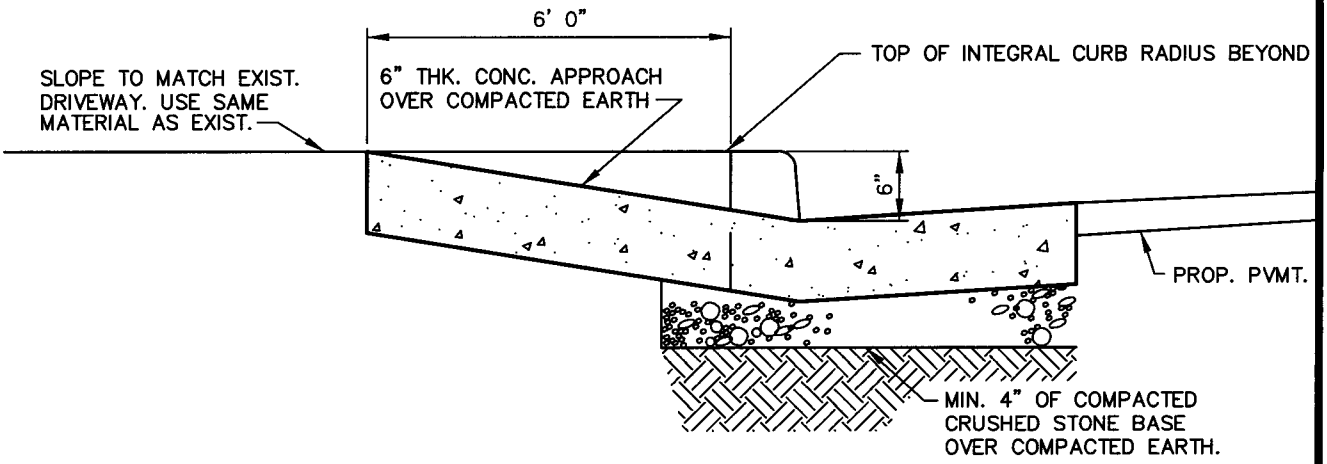

INTEGRAL CONC. APPROACH, CURB RADII, & GUTTER DETAIL

N.T.S.

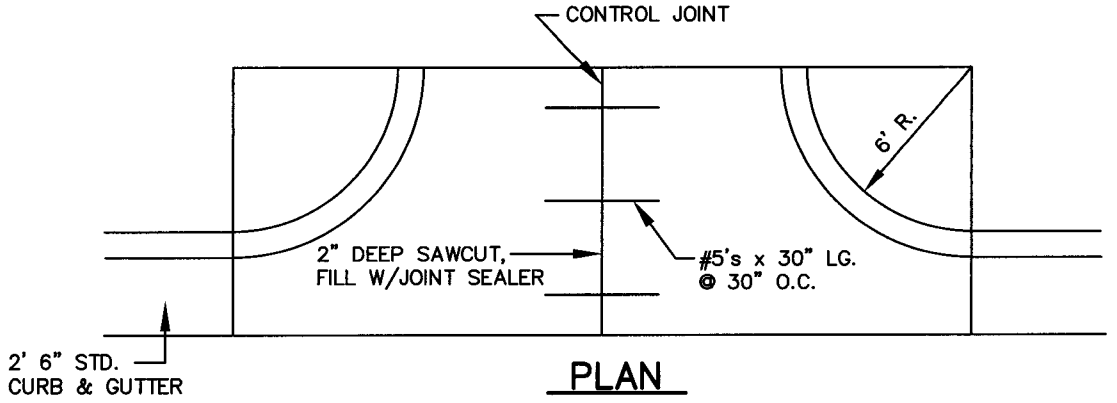

PLAN

CONCRETE APPROACH DETAILS

CITY OF CARL JUNCTION, MISSOURI

ALLGEIER, MARTIN & ASSOCIATES, INC.
CONSULTING ENGINEERS & SURVEYORS
JOPLIN, MISSOURI

Z:\Carl Junction MO\City of Carl Junction\Standard Specifications\Drawings\Cj-specs-TEST.dwg, 3/5/2015 3:56:51 PM

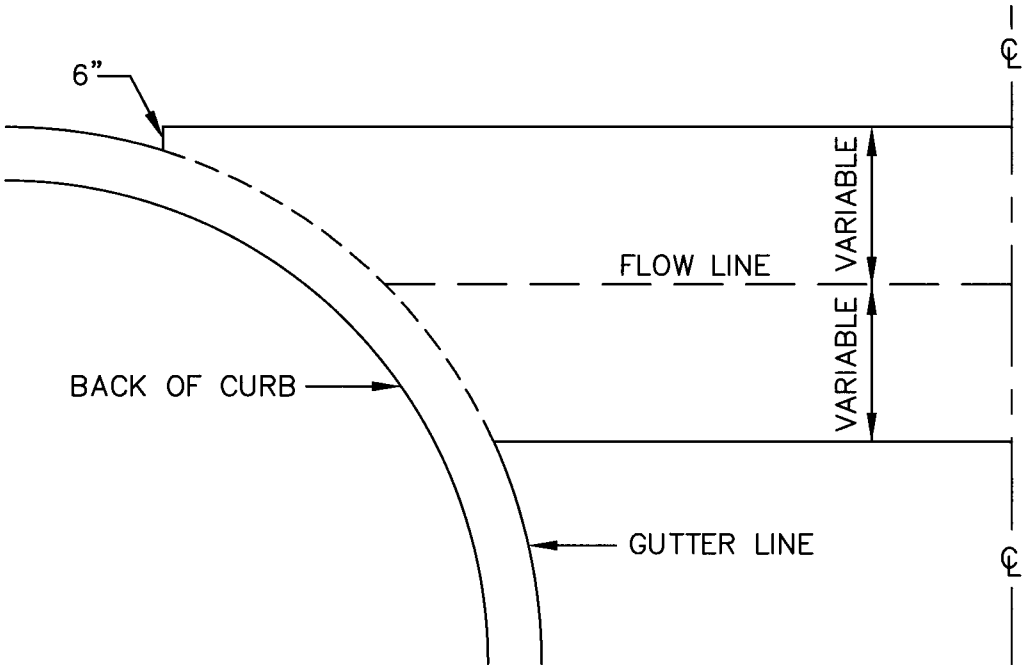

PLAN

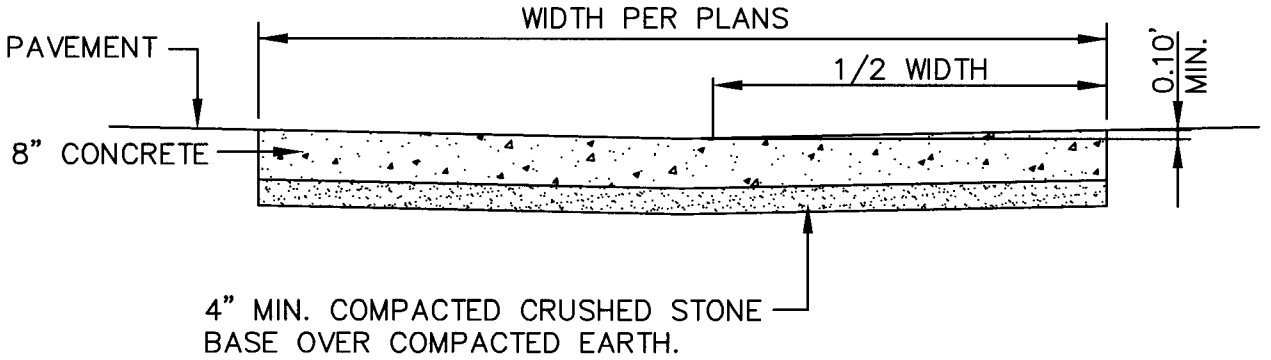

SECTION THROUGH ℄

NOTES:

1. IF CURB & GUTTER IS EXISTING PLACE MATERIAL BETWEEN GUTTER & THE NEW GUTTER CROSSING.

2. IF NO CURB & GUTTER EXISTS CONSTRUCTION OF CURB, GUTTER & GUTTER CROSSING SHALL BE MONOLITHIC.

CITY OF CARL JUNCTION, MISSOURI

ALLGEIER, MARTIN & ASSOCIATES, INC.
CONSULTING ENGINEERS & SURVEYORS
JOPLIN, MISSOURI

Z:\Carl Junction MO\City of Carl Junction\Standard Specifications\Drawings\Cj-specs-TEST.dwg, 3/5/2015 3:57:13 PM

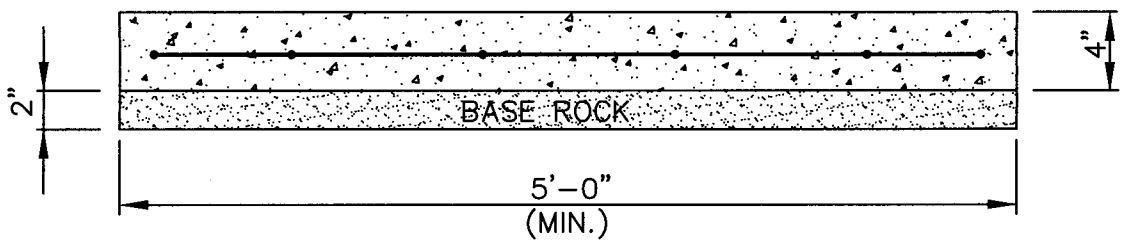

STANDARD SIDEWALK

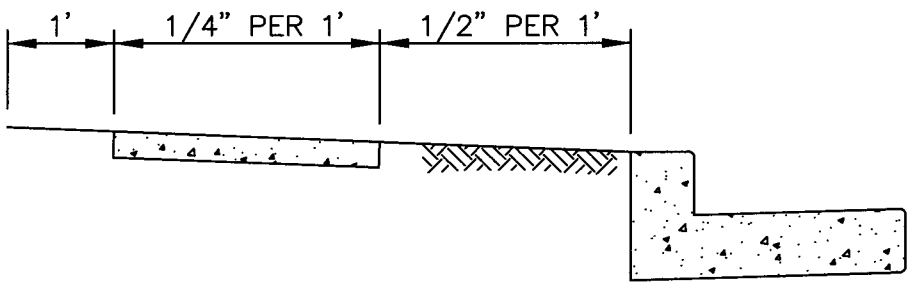

NOTES:

1. CONSTRUCTION EXPANSION JOINT EACH AND CONTRACTION JOINT EACH 10'
2. USE 3500 LB. CONCRETE AT 28 DAY COMPRESSIVE TEST
3. REINFORCED WITH (1) LAYER OF WELDED WIRE FABRIC
4. ALL SIDEWALKS SHALL FOLLOW CURRENT ADA GUIDELINES.

SIDEWALK DETAILS

CITY OF CARL JUNCTION, MISSOURI

ALLGEIER, MARTIN & ASSOCIATES, INC.
CONSULTING ENGINEERS & SURVEYORS
JOPLIN, MISSOURI

STATE OF MISSOURI
Mel Carnahan, Governor • Stephen M. Mahfood, Director
DEPARTMENT OF NATURAL RESOURCES
DIVISION OF ENVIRONMENTAL QUALITY
Southwest Regional Office
2040 W. Woodland Springfield, MO 65807-5912
(417) 891-4300
FAX (417) 891-4399

November 9, 1999

CERTIFIED MAIL #Z 193 693 457
RETURN RECEIPT REQUESTED

The Honorable Jim Wisdom, Mayor
City of Carl Junction
P.O. Box 447
Carl Junction, MO 64834

Dear Mayor Wisdom:

We have reviewed the sanitary sewer system specification from the *Standard Specifications for Public Improvements*, to serve the city of Carl Junction, Jasper County, Missouri. Please note the following comments:

1. The minimum size for gravity sewer mains should be indicated in section 101-1. As per Section 10 CSR 20-8.120(6)(A) of the Design Guide, the minimum size for gravity sewer mains is eight inches (8").

2. Section 102.2.1 Pipe Installation, should include a subsection for slope and alignment of gravity sewers, and include the requirement for uniform slopes between manholes, straight alignment between manholes for lines of twenty-four inches (24") in diameter or less, and checking the alignment with a laser beam or lamping.

3. Drawing A-2 does not show the mastic joint seal at the manhole joints. The specification requires mastic and it would be advisable to show it in the drawing.

4. Drawing A-4 should show a gasket connection for the bottom pipe entry on the drop manhole.

5. In Section 102.2.1.8, snaking of the pipe will violate 10 CSR 20-8.120(6)(D) of the Design Guide. With the rubber gasket sewer pipe, expansion and contraction should not be a problem. Please remove this section from your specifications.

6. Section 101.4.1.12 should indicate when drop type manholes are required. As per Section 10 CSR 20-8.120(7)(B) of the Design Guide, a drop pipe should be provided for a sewer entering a manhole at an elevation of twenty-four inches (24") or more above the manhole invert.

RECYCLED PAPER

7. Should the minimum access diameter for manholes be added to section 101-4.1.10 of the specifications? As per Section 10 CSR 20-8.120(7)(C) of the Design Guide, a minimum access diameter of twenty-two inches (22") shall be provided.

8. If allowed, specification should be included to Section 102-2 for the aerial crossing of sewers. These specifications should be in accordance with Section 10 CSR 20-8.120(10) of the Design Guide.

9. Under some conditions manholes are placed at locations where standing water may be over the top. Under these conditions, a specification for a gasketed, bolt-down lid might be useful. It is suggested that a specification of this nature be added to sections pertaining to manhole installation and materials.

10. A common practice is to use a double ring of mastic on the manhole joints to assure a seal. It is suggested that this specification be added to Section 101.4.2.2(a).

11. Should specifications for sewage pumping stations be including or should the specifications contain a statement indicating that they are limited to sanitary sewer forcemains and gravity lines only?

Once the specification have been revised to include the above required information, an ordinance requiring use of the standard specification for all sewer extension to the City's collection system will need to be approved by the City as part of the standard specification approval.

Should you have any questions, please call me at (417)891-4300.

Sincerely,

SOUTHWEST REGIONAL OFFICE

Clinton J. Finn

Clinton J. Finn
Environmental Engineer

CJF:ls

JASPER/WPC
CARL JUNCTION CP

STATE OF MISSOURI
Matt Blunt, Governor • Michael D. Wells, Acting Director
DEPARTMENT OF NATURAL RESOURCES
www.dnr.mo.gov
P. O. Box 176, Jefferson City, MO 65102
573/751-5331

CI
Carl Junction, MO
Review No. 53476-04
PWS ID # MO5010138

January 25, 2005

Mr. Jim Wisdom
City of Carl Junction
P.O. Box 447
Carl Junction, Missouri 64834

Dear Mr. Wisdom:

We are advising that detailed specifications to be considered as Standard Specifications for Carthage, Missouri were submitted by Allgeier Martin and Associates, Inc., Joplin, Missouri, on December 27, 2004 are hereby approved.

Please make reference to Review Number 53476-04 when submitting projects using these specifications.

Sincerely,

WATER PROTECTION PROGRAM

Breck E. Summerford, P.E., Chief
Public Drinking Water Infrastructure
Permits and Engineering Section

WHS:be

Certified Mail 7001 2510 0006 2078 6074

c: Allgeier Martin and Associates, Inc.
Southwest Regional Office

ALLGEIER, MARTIN and ASSOCIATES, INC.
Consulting Engineers

Corporate Office
7231 East 24th Street
Joplin, MO 64804
417.680.7200

amce.com

Rolla Office
112 West 8th Street
Rolla, MO 65401
573.341.9487