CITY of CAPE GIRARDEAU

ENGINEERING DIVISION
Cape Girardeau, Missouri

STANDARD SPECIFICATIONS

STATE OF MISSOURI
CASEY L. BRUNKER
NUMBER
PE-2010018549
PROFESSIONAL ENGINEER

02-25-16

City of Cape Girardeau
401 Independence
Cape Girardeau, MO 63703

ISSUED February 25, 2016

RECEIVED
FEB 29 2016
Water Protection Program

PAGES 1 – 75

TABLE OF CONTENTS

DIVISION 100 – GENERAL SPECIFICATIONS ---------- S-1
SECTION 101 – GENERAL ---------- S-1
SECTION 102 – DEFINITION OF TERMS ---------- S-1
SECTION 103 – INSPECTION ---------- S-3
SECTION 104 – RESPONSIBILITES OF CONTRACTOR/DEVELOPER ---------- S-3
SECTION 105 – MEASUREMENT AND PAYMENT ---------- S-6

DIVISION 200 – EROSION AND SEDIMENT CONTROL ---------- S-7
SECTION 201 – STORMWATER POLLUTION PREVENTION PLAN ---------- S-7
SECTION 202 – TEMPORARY EROSION AND SEDIMENT CONTROL ---------- S-7
SECTION 203 – TEMPORARY ROCK DITCH/INLET CHECKS ---------- S-8
SECTION 204 – PERMANENT EROSION AND SEDIMENT CONTROL ---------- S-9
SECTION 205 – SEED AND MULCH ---------- S-9
SECTION 206 – INFILTRATION TRENCH ---------- S-11
SECTION 207 – PAYMENT ---------- S-11

DIVISION 300 – EARTHWORK ---------- S-13
SECTION 301 – CLEARING, GRUBBING, AND TRIMMING ---------- S-13
SECTION 302 – REMOVAL OF IMPROVEMENTS ---------- S-13
SECTION 303 – EXCAVATION ---------- S-14
SECTION 304 – EMBANKMENT ---------- S-15
SECTION 305 – TRENCH EXCAVATION AND BACKFILL ---------- S-16
SECTION 306 – SUBGRADE ---------- S-18
SECTION 307 – FINAL GRADING ---------- S-19
SECTION 308 – PAYMENT ---------- S-19

DIVISION 400 – AGGREGATES ---------- S-21
SECTION 401 – AGGREGATE BEDDING/INITIAL BACKFILL ---------- S-21
SECTION 402 – AGGREGATE TRENCH BACKFILL ---------- S-21
SECTION 403 – AGGREGATE BASE COURSE ---------- S-21
SECTION 404 – ROCK DITCH LINER ---------- S-22
SECTION 405 – ROCK BLANKET ---------- S-23
SECTION 406 – GABIONS ---------- S-23
SECTION 407 – FLOWABLE FILL ---------- S-24
SECTION 408 – PAYMENT ---------- S-24

DIVISION 500 – FLEXIBLE PAVEMENT ---------- S-26
SECTION 501 – MATERIALS ---------- S-26
SECTION 502 – ASPHALT CONSTRUCTION REQUIREMENTS ---------- S-26
SECTION 503 – FIELD QUALITY CONTROL ---------- S-28
SECTION 504 – PAYMENT ---------- S-28

DIVISION 600 – PORTLAND CEMENT CONCRETE PAVEMENT (PCCP) ---------- S-30
SECTION 601 – MATERIALS ---------- S-30
SECTION 602 – MIX DESIGN ---------- S-31
SECTION 603 – BATCHING ---------- S-31
SECTION 604 – CONSTRUCTION REQUIREMENTS ---------- S-31
SECTION 605 – PAYMENT ---------- S-35

DIVISION 700 – PAVEMENT REPAIR ---------- **S-36**
SECTION 701 – MATERIALS ---------- *S-36*
SECTION 702 – ASPHALT PAVEMENT REPAIR ---------- *S-36*
SECTION 703 – PORTLAND CEMENT CONCRETE PAVEMENT REPAIR ---------- *S-36*
SECTION 704 – PAYMENT ---------- *S-37*

DIVISION 800 – DRIVEWAYS AND SIDEWALKS ---------- **S-38**
SECTION 801 – DRIVEWAYS ---------- *S-38*
SECTION 802 – CONCRETE SIDEWALKS ---------- *S-38*
SECTION 803 – PAYMENT ---------- *S-39*

DIVISION 900 – MISCELLANEOUS STREET CONSTRUCTION ---------- **S-40**
SECTION 901 – TEMPORARY TRAFFIC CONTROL ---------- *S-40*
SECTION 902 – TRAFFIC SIGNALS ---------- *S-41*
SECTION 903 – STREET LIGHTING ---------- *S-43*
SECTION 904 – TRAFFIC SIGNAGE ---------- *S-44*
SECTION 905 – PAVEMENT MARKING ---------- *S-45*
SECTION 906 – TRACER WIRE FOR FIBER OPTIC CABLE ---------- *S-47*
SECTION 907 – PAYMENT ---------- *S-47*

DIVISION 1000 – STORM SEWERS ---------- **S-49**
SECTION 1001 – STORM PIPES ---------- *S-49*
SECTION 1002 – JUNCTION BOXES, AREA INLETS, AND CURB INLETS ---------- *S-49*
SECTION 1003 – UNDERDRAINS ---------- *S-52*
SECTION 1004 – PAYMENT ---------- *S-52*

DIVISION 2000 – WATER MAIN CONSTRUCTION ---------- **S-54**
SECTION 2001 – GENERAL ---------- *S-54*
SECTION 2002 – DESIGN ---------- *S-54*
SECTION 2003 – MATERIALS ---------- *S-54*
SECTION 2004 – LOCATION ---------- *S-56*
SECTION 2005 – EXCAVATION AND PREPARATION OF THE TRENCH ---------- *S-59*
SECTION 2006 – INSTALLATION OF MAINS ---------- *S-59*
SECTION 2007 – ANCHORAGE ---------- *S-60*
SECTION 2008 – BACKFILLING ---------- *S-60*
SECTION 2009 – TESTING ---------- *S-60*
SECTION 2010 – PAYMENT ---------- *S-61*

DIVISION 3000 – SANITARY SEWER MAIN CONSTRUCTION ---------- **S-63**
SECTION 3001 – GENERAL ---------- *S-63*
SECTION 3002 – MATERIALS ---------- *S-63*
SECTION 3003 – CONSTRUCTION CASTINGS ---------- *S-65*
SECTION 3004 – INSTALLATION ---------- *S-66*
SECTION 3005 – TESTING OF SEWERS ---------- *S-70*
SECTION 3006 – LIFT STATIONS ---------- *S-72*
SECTION 3007 – PAYMENT ---------- *S-74*

DIVISION 100 – GENERAL SPECIFICATIONS

SECTION 101 – GENERAL

101.1 Authority. The City of Cape Girardeau Standard Specifications and Drawings are developed, drawn, and approved by the Engineer of the City of Cape Girardeau, Missouri, and shall be enforced, and no part thereof altered without approval of said Engineer.

101.2 Intent. The intent of these Specifications is to specify generally the type and quality of all materials, the method and procedure of construction, the inspection and testing methods, and/or the terms of acceptance by the City of Cape Girardeau of any work or extension of any public facilities, that are, or will be, part of the facilities owned and maintained by the City of Cape Girardeau, Missouri.

101.3 Interpretation. These Specifications and Standard Drawings are intended to be explanatory of each other, but should any discrepancies appear between these Specifications and the Standard Drawings, or between any of the Standard Drawings themselves, such discrepancies shall be interpreted, explained, and adjusted by the Engineer. Any doubts or misunderstandings as to the meaning or intent of these Specifications, or any obscurity in the wording of the same, shall be explained by said Engineer, who shall have the right to correct any errors or omissions in them. When such correction is found necessary for the proper fulfillment of their intentions, the correction to be effective at the time the Engineer shall give notice thereof.

The Engineer may, at his own discretion, furnish additional detail drawings to which the Contractor will be required to conform. However, these detailed drawings shall, if given, be only an elaboration or fuller interpretation of the Standard Drawings already on file.

101.4 Coordination of the Contract Documents. The documents included in the contract are intended to be complementary and to describe a complete work. If the Engineer determines a conflict exists between the contract documents, the following hierarchy will be applied and the Contractor shall then complete the work according to the interpretation made by the Engineer.

Hierarchy of the Contract Documents		
Job Special Provisions (JSP)	Hold over:	Project Plans, Supplementary Conditions, General Conditions, Standard Specifications and Drawings
Project Plans *	Hold over:	Supplementary Conditions, General Conditions, Standard Specifications and Drawings
Supplementary Conditions	Hold over:	General Conditions, Standard Specifications and Drawings
General Conditions	Hold over:	Standard Specifications and Drawings

* Calculated dimensions hold over scaled dimensions.

SECTION 102 – DEFINITION OF TERMS

102.1 ADA. Americans with Disabilities Act.

102.2 Approved Product List (APL). A list of products on file with the Engineer that have been approved

for use on City infrastructure.

102.3 ANSI. American National Standards Institute.

102.4 ASTM. American Society for Testing and Materials.

102.5 AWWA. American Water Works Association.

102.6 City. The City of Cape Girardeau, Missouri, acting through its proper representatives.

102.7 City Council. The duly elected Mayor and Council Members of the City of Cape Girardeau, Missouri.

102.8 Code of Ordinances. The Code of Ordinances of the City of Cape Girardeau, Missouri.

102.9 Contractor. The person, firm, or corporation to whom the contract for improvement has been awarded.

102.10 Developer. The person, firm, or corporation who develops, improves, or changes a tract of land.

102.11 Engineer. The City Engineer of the City of Cape Girardeau, Missouri, or his/her authorized agents limited by the particular duties entrusted to them.

102.12 Excavation. The removal of materials from the construction area to the lines and grades shown on the Plans.

102.13 General Conditions. The *Standard General Conditions of the Construction Contract*, prepared by the Engineers Joint Contract Documents Committee, as adopted by the City of Cape Girardeau.

102.14 Inspector. The engineering or technical inspectors, authorized by the Engineer, limited in each case to the particular duties entrusted to them.

102.15 MDNR. Missouri Department of Natural Resources.

102.16 MoDOT. Missouri Department of Transportation.

102.17 MUTCD. Manual on Uniform Traffic Control Devices.

102.18 NFPA. National Fire Protection Association.

102.19 Plans. The project drawings that provide in detail the nature of the work to be done.

102.20 PPI. Plastic Pipe Institute.

102.21 PROWAG. Public Right of Way Accessibility Guidelines.

102.22 Specifications. The City of Cape Girardeau Standard Specifications.

102.23 Standard Drawings. The City of Cape Girardeau Standard Drawings.

102.24 Street, Arterial. A road of considerable continuity which serves or is intended to serve as a principal traffic way between separate areas or districts and which is the main means of access to the collector street system, highways, and expressways.

102.25 Street, Collector. A road that serves abutting properties, intercepts local streets, connects with community facilities, and carries neighborhood traffic to the arterial street system.

102.26 Street, Local. A road designated to provide access to abutting property from collector and arterial streets.

102.27 Supplementary Conditions. The *Supplementary Conditions,* prepared by the Engineers Joint Contract Documents Committee, as adopted by the City of Cape Girardeau.

102.28 Water Division. The Water Division of the Public Works Department of the City of Cape Girardeau, Missouri.

SECTION 103 – INSPECTION

103.1 All materials shall be subject to inspection and standard testing by the Engineer before being placed as part of the project. All rejected materials shall at once be removed from the project. Other material shall then be furnished that is in accordance with the provisions and requirements set out in these Specifications.

103.2 All work shall be subject to inspection by the Engineer for conformance with the provisions and requirements set out in these Specifications. The Contractor is to determine the means and methods of construction; however, this does not prevent the Engineer from enforcing these Specifications or industry standards of practice.

103.3 If the Contractor fails or refuses to remove the material as above, or do other acceptable work when ordered, the Engineer shall have the right and authority to stop the Contractor and his workers at once.

103.4 The Contractor shall furnish all necessary facilities should it be advisable to make an examination of the work already completed. The Engineer shall have the right to reject, at any time, any work or material that may be found faulty; but no inspection or orders given during the progress of the work shall in any way invalidate the Contractor's bond, nor in any way hinder the City from recovering under same.

SECTION 104 – RESPONSIBILITIES OF CONTRACTOR / DEVELOPER

104.1 General. All work shall be in the custody and under the charge and care of the Contractor, until work is accepted by the City Council. The Contractor shall rebuild, repair, restore, or make good at his expense, any lost or stolen City owned materials and all injuries or damages to any portion of the work before its completion and acceptance caused by the action of the elements or from any other reason.

104.2 Instructions. All instructions to the Contractor relating to the work shall be given through the Engineer and the Contractor shall obey all instructions so given concerning the method of procedure throughout the work.

104.3 Night, Saturday and Sunday, and Holiday Work. Non-emergency excavations on arterial and collector streets may not be performed during the hours of 7:00 AM to 8:30 AM and 4:00 PM to 6:00 PM, in order to minimize disruption of traffic flow, unless otherwise approved by the Engineer. Work on Rights-of-Way shall be performed at such times that will allow the least interference with the normal flow of traffic and the peace and quiet of the surrounding area, and shall not work between the hours of 11:00 PM and 6:00 AM. Saturday work will require the Engineer's written consent. No Sunday or Holiday work will be permitted, except in case of great emergency, and then only with written consent

of the Engineer

104.4 Permits and Licenses. The City will secure and pay associated fees for environmental permits from State and Federal agencies for City initiated projects, unless otherwise specified on the Plans. The Contractor shall procure all other necessary permits and licenses and give all necessary notices for the lawful prosecution of the work. The Contractor shall pay all charges and fees covering these permits and for all permits for non-City initiated projects.

104.5 Laws, Ordinances, Regulations. The Contractor shall at all times observe and conform to all Federal and State laws, local laws, ordinances, orders, decrees, and regulations existing at the time of or enacted subsequent to the execution of the contract which in any manner affect the prosecution of the work. The Contractor and his surety shall indemnify and hold harmless the City and all of its Officers, Engineers, Representatives, Agents, and Employees against any claim or liability arising from or based on the violation of any such law, ordinance, regulation, order, or decree whether by himself, his employees, or his subcontractors.

104.6 Lines and Grades. The Contractor shall be responsible for the proper layout and construction staking of the proposed improvements. Layout and staking shall be performed by a licensed Missouri Professional Land Surveyor. Property irons or accurately located and labeled laths shall be provided at key lot corners, particularly at intersections and curves. Improvements shall not be located solely from street centerline markers. The street must be cut or filled to final subgrade prior to installation of any water main extension and/or sewer main installation or otherwise approved by the Engineer. Failure to provide the above requirements will result in suspension of the work. If property pins or benchmarks are disturbed, they shall be restored to their original location.

104.7 Foreman. At all times when the work is in progress, the Contractor shall maintain a competent foreman or head-workman on the ground with a copy of the Plans. Instructions given to said foreman or head-workman shall be considered as having been given to the Contractor.

104.8 Materials, Labor, Tools, Etc. The Contractor shall furnish, at his own cost and expense, all transportation, tools, labor, materials, and all else requisite to execute and complete the work in the best possible and most expeditious manner according to the Plans.

He shall employ only competent, skilled workers, and shall discharge immediately, whenever required to do so by the Engineer, any worker considered by the Engineer as incompetent or disorderly, or who shall refuse to obey the instructions as given to the Contractor or his foreman, and shall not again employ such person on the work.

104.9 Submittals. The submittal process will be at the sole expense and responsibility of the Contractor.

A. **Prior to starting construction.** The proper documentation, such as but not limited to a Preliminary Progress Schedule, a Preliminary schedule of Shop Drawing and Sample Submittals, a Preliminary Schedule of Values, etc., shall be completed and submitted as stated in the General and/or Supplementary Conditions. In addition, a Temporary Traffic Control Plan and Stormwater Pollution Prevention Plan shall be submitted at this time. One copy of each document shall be submitted.

B. **Throughout construction.** The proper documentation, such as updated Progress Schedules, Shop Drawing and Sample Submittals, etc., shall be completed and submitted as stated in the General and/or Supplementary Conditions. In addition, appropriately updated Temporary Traffic Control Plan and Stormwater Pollution Prevention Plan shall be submitted at this time. The Contractor shall submit up to six copies of the shop drawing and sample submittals. The Contractor shall follow the submittal procedures as outlined in the General and/or Supplementary Conditions.

C. **Upon completion of construction and prior to final payment.** All Operating and Maintenance

Manuals shall be submitted at this time. The Contractor shall submit up to six copies of each Manual.

104.10 Existing Utilities. Prior to excavation, the Contractor shall determine the location of existing underground structures and utilities. Care shall be exercised by the Contractor during excavation to avoid damage to existing structures and utilities. When obstructions that are not shown on the Plans are encountered during the progress of the work and those obstructions interfere so that alteration of the Plans is required, the Engineer will alter the Plans or order a deviation in line and/or grade or arrange for removal, relocation, or reconstruction of the obstructions. Where the work encounters above or below ground utilities, either mains or services, the Contractor shall contact the proper utility company so that its representative can be on hand to direct the excavation.

If the Contractor damages any utility, the repair to restore the utility to its original condition shall be done at his expense. The Contractor shall furnish temporary support, adequate protection, and maintenance of all underground and surface structures, drains, sewers, and other obstructions encountered. All properties that have been disturbed shall be restored as nearly as practical to the original condition.

104.11 Traffic Control. The Contractor shall submit a Temporary Traffic Control Plan to the Engineer for approval prior to beginning construction. Temporary traffic control devices must comply with the latest edition of the *Manual on Uniform Traffic Control Devices* (MUTCD). Temporary traffic control devices must also meet the *Missouri Department of Transportation's (MoDOT) Quality Standards* as shown in the latest edition of the *MoDOT Engineering Policy Guide.*

The Contractor shall erect and maintain proper temporary traffic control devices at all times, including but not limited to, warning and detour signs and pavement markings as directed, to guard against any accident in consequence of the work.

The Contractor shall conduct his work so as to interfere as little as possible with traffic and so as to inconvenience as little as possible the citizens residing along the lines of the work. Access to all driveways shall be maintained during construction except as may otherwise be approved by the Engineer.

Streets, alleys, driveways, and Rights-of-Way shall be kept in passable condition by refilling shrunken trenches, laying temporary paving over trenches, providing steel plate bridging, etc. to the satisfaction of the Engineer.

104.12 Cleanup. The Contractor shall remove all materials and debris from the streets as the work progresses so that the public may have the use of the street as soon as is possible.

The Contractor shall remove all waste, debris, and surplus dirt from the site of the work, and leave the site in a neat and acceptable condition. All areas of disturbed earth shall be seeded and mulched with an acceptable material as described in Section 205 of these Specifications.

Before the work will be considered complete, all rubbish and unused material due to or connected with the construction must be removed by the Contractor, off of City property, subject to approval of the Engineer, and in accordance with applicable Federal, State and local regulations. Property that has been damaged or disturbed by the work shall be restored to the original condition.

104.13 Warranty. The Contractor shall warranty his workmanship and materials against defects for one year after the date of completion and acceptance. If the Contractor fails to remedy such defects within ten

days after the written notice to do so, the City has the right to repair the same or cause the same to be repaired and charge the cost of the same against this warranty. See Section 902.25 of these Specifications for additional warranty information for Uninterruptable Power Supplies.

104.14 Protection of Property. Trees, shrubs, fences, lawns, and all other property and surface structures outside of easements or Right-of-Way shall be protected during construction unless their removal is shown on the Plans or approved by the Engineer. Any cutting of tree roots or branches shall be done only as approved by the Engineer. All materials, including excavated material, shall be placed in a manner that shall not obstruct the work nor endanger the workmen or public, nor obstruct sidewalks, driveways, streets, or other structures.

104.15 Stockpiled Excavated Material. Backfill material shall be stockpiled in an orderly manner, a sufficient distance from the trench to prevent slides or cave-ins, but so it will interfere as little as possible with public travel and occupants of adjoining property. All material taken from the trench which is unsuitable for backfilling shall be removed and disposed of by the Contractor, off of City property, subject to approval of the Engineer, and in accordance with applicable Federal, State and local regulations. Proper erosion control methods shall be installed around stockpiled excavated materials.

SECTION 105 – MEASUREMENT AND PAYMENT

105.1 Engineer's Measurements. The application for payment will be based on the actual quantities as determined by actual measurements together with the unit prices stipulated in the Bid Form. The application for payment may include such amount as is due to the Contractor on account of a change order. Payment for change order work will not be paid until the change order is executed.

105.2 Change Order. All changes in work whether an addition, deletion, or revision in the work, or an adjustment in the contract price or contract times, shall be done in accordance to the General and/or Supplementary Conditions. No payment for change order work can be made until the change order is executed.

DIVISION 200 – EROSION AND SEDIMENT CONTROL

200.1 Scope. The work covered by this section consists of furnishing all labor, equipment, and materials and performing all operations to construct and maintain measures to prevent erosion damage on the project site and adjacent properties. The requirement for erosion control is to eliminate any sediment from leaving the construction site or entering the storm drainage system.

200.2 Scheduling. Work shall be scheduled to expose areas subject to erosion for the shortest period of time possible, and natural vegetation preserved to the greatest extent practicable. Temporary storage and construction buildings, if any, shall be located, and construction traffic routed, to minimize erosion. Temporary, fast-growing vegetation or other suitable ground cover shall be provided as necessary to control runoff subject to Engineer approval.

200.3 Maintenance of Erosion Control. Maintenance of all erosion control shall be the responsibility of the Contractor. Any costs associated with this maintenance shall be the responsibility of the Contractor.

200.4 Other Best Management Practices (BMP). Other erosion control measures and energy dissipation of discharge flow other than identified in this division may be allowed and are encouraged, subject to approval from the Engineer prior to construction.

SECTION 201 – STORMWATER POLLUTION PREVENTION PLAN (SWPPP)

201.1 Stormwater Pollution Prevention Plan (SWPPP). The Contractor shall submit a SWPPP in accordance with Section 104.9. The Contractor shall prevent erosion of soil on the site and onto adjacent properties that result from construction activities. Effective measures shall be completed and in-place prior to the commencement of clearing, grading, excavation, or any other operation that may disturb the natural flow. See United States Environmental Protection Agency (EPA) website for templates and/or other examples. The SWPPP shall contain a sediment and erosion control plan, and description of all construction site activities to prevent stormwater contamination and to control sedimentation and erosion. The SWPPP shall contain, at a minimum, a cover/title page, Project and SWPPP contact information, Site and activity description with a site map, identification of potential pollutant sources, description of potential pollutant sources, description of controls to reduce pollutants, maintenance and inspection procedures, records of inspections and follow-up maintenance of BMPs, and SWPPP amendments. See the City's Code of Ordinances for additional information and requirements.

SECTION 202 – TEMPORARY EROSION AND SEDIMENT CONTROL

202.1 Temporary Erosion and Sediment Control. Erosion control measures consisting of, but not limited to, temporary gravel construction entrance, permanent seeding and sod, channel protection, temporary slope drains, paved flumes, outlet stabilization structures, fabric filter silt fences, and temporary sediment traps shall be used as necessary to control runoff and erosion. In addition, reseeding to establish permanent protection shall be done as soon as possible. When the site is inactive for fourteen days, the Contractor shall seed and straw in order to establish temporary or permanent cover per Section 205 of these Specifications. The Contractor may also be required to provide additional erosion control at the site as directed by the appropriate Federal, State and/or local regulatory agency. This additional erosion control work shall be considered a subsidiary obligation of the Contractor and all costs in connection therewith shall be the responsibility of the Contractor.

202.2 Temporary Construction Entrance. Contractor shall construct temporary construction entrances as indicated on the Plans and other areas as required from the project site to public roads in order to reduce the transport of mud onto the roadway from both vehicular traffic and runoff. Construction of the

entrances shall conform to the details shown on the Standard Drawings.

202.3 Temporary Slope Drains. The Contractor may employ the use of temporary slope drains to convey concentrated water flows down cut or fill slopes while minimizing erosion. These Temporary Slope Drains shall be placed as indicated on the Plans and other areas as required. The Contractor shall ensure that the structures are properly sized, constructed, and maintained. Construction of the slope drains shall conform to the *Missouri Standard Specifications for Highway Construction,* latest edition.

202.4 Temporary Sediment Trap. The Contractor shall construct temporary sediment traps to trap and retain sediment picked up by storm runoff on the site as indicated on the Plans. The Contractor shall remove sediment from the trap as required to maintain the necessary capacity. Construction shall conform to the *Missouri Standard Specifications for Highway Construction,* latest edition. Sediment shall not be used as fill material.

202.5 Silt Fence. The Contractor shall construct, install and maintain silt fence to limit the transport of sediment from disturbed construction areas. Drainage area shall be limited to ¼ acre per 100 feet of silt fence, with a maximum continuous length of 600 feet. Silt fence can be used to create small catchments of stormwater flow by creating a small J-hook shape with the silt fence. See table below for land slope and distance for silt fence. Construction and maintenance shall conform to the details shown on the Standard Drawings.

Land Slope (%)	Maximum Slope Distance* above Fence (ft)
<2	100
2 - 5	75
>5	50*

*Follow manufacturer recommendations for proper spacing.

202.6 Temporary Berm. The Contractor shall construct temporary berms as indicated on the Plans to limit the transport of sediment from disturbed construction areas. Construction and maintenance shall conform to the *Missouri Standard Specifications for Highway Construction,* latest edition.

202.7 Sediment Basin. The Contractor shall construct, install, and maintain sedimentation basins indicated on the Plans. Construction and maintenance shall conform to the *Missouri Standard Specifications for Highway Construction,* latest edition.

SECTION 203 – TEMPORARY ROCK DITCH/INLET CHECKS

203.1 Scope. The work covered by this section consists of furnishing all labor, equipment, and materials and performing all operations, including maintenance, in connection with placing temporary rock ditch and inlet checks according to the lines, grades, and type, as shown on the Plans.

203.2 Materials. Shall conform to the *Missouri Standard Specifications for Highway Construction,* latest edition. Rock ditch checks shall be constructed in accordance with the Plans, or as directed by the Engineer, and shall have a minimum effective height of 18 inches. The predominant size of the rock used shall range between 4 inches and 12 inches.

203.3 Maintenance. The Contractor shall replace checks as directed by the Engineer. Periodic sediment removal shall include removal and disposal of sediment by the Contractor, off of City property, to a location where sediment will not erode into construction areas, streams, or other bodies of water and subject to approval of the Engineer, and in accordance with applicable Federal, State and local

regulations. The Contractor shall inspect work site and maintain as specified in this Section of these Specifications.

SECTION 204 – PERMANENT EROSION AND SEDIMENT CONTROL

204.1 Permanent Erosion and Sediment Control. At the completion of the work, or at such time as the Engineer determines that adequate permanent erosion control measures have been established, the Contractor shall remove the temporary erosion control measures and properly dispose of, off of City property, subject to approval of the Engineer, and in accordance with applicable Federal, State and local regulations, and at the Contractor's expense. If Contractor does not complete this work, even if the contract has been closed, the City reserves the right to file abatement charges. Contractor shall use proper permanent seeding and sod techniques on areas noted on the Plans and all other areas disturbed by construction activity, to permanently stabilize graded areas against the effects of erosion. Refer to Section 205 of these Specifications for proper materials and procedures.

204.2 Channel Protection/Outlet Stabilization Structures. The Contractor shall construct outlet and channel protection as indicated on the Plans, and other areas as required, to minimize erosion of the drainage channels. Protection may be made of aggregates or other viable products as approved by the Engineer. Materials and methods of aggregates shall conform to Division 400 of these Specifications.

204.3 Turf Reinforcement Mat. The Contractor shall construct turf reinforcement mats as indicated on the Plans, and other areas as required to minimize erosion. Materials and methods shall conform to the *Missouri Standard Specifications for Highway Construction*, latest edition.

SECTION 205 – SEED AND MULCH

205.1 Scope. The work covered by this section consists of furnishing all labor, equipment, and materials and performing all operations, in connection with establishing grass on areas disturbed by the Contractor's operations. Seeding will not be required in areas being used for the production of crops. When the site is inactive for fourteen days, the Contractor shall seed and straw in order to establish temporary or permanent cover.

205.2 Materials.

A. Fertilizer and Lime. Fertilizer shall be pelleted, granulated, or approved equal and shall be free flowing and shall have an analysis of available nitrogen, phosphorus, and potassium of 12-12-12. The fertilizer shall be applied at a rate of 600 pounds per acre. Lime shall be agricultural lime pelleted, granulated, or approved equal and applied at a rate of 2 tons per acre.

B. Seed. Missouri Certified seed, tested and tagged, shall be used in accordance Missouri Seed Improvement Association. Seed shall be furnished in sealed, standard containers. Seed that is wet or moldy or that has been otherwise damaged in transport or storage will not be acceptable. Seed mixtures shall conform to the following, except as otherwise noted on the Plans.

1. **Lawn Area Seed Mix.** Seed shall be a blend of 90% turf type fescue mixed with 10% perennial ryegrass applied at a rate of eight pounds per one thousand square feet. Turf type fescue cultivars shall be equal parts of three of the following varieties: Tempo, Falcon, Olympic, Rebel, Rebel II, Bonanza, Adventure, Mustang, Arid, Apache, Jaguar, Wrangler, and Cimarron. The 10% perennial ryegrass shall be one of the following varieties: Citation II, Palmer, Fiesta, Manhattan II, Ranger, Prelude, Diplomat, Pennant, or Blazer.
2. **Field Area Seed Mix.** Seed shall be a blend of 80% Kentucky 31 tall fescue mixed with 10% annual ryegrass and 10% perennial ryegrass applied at a rate of 120 pounds per acre.

C. Sod. Certified turf-grass sod conforming to the American Sod Producers Association specifications for machine-cut thickness, size, strength, moisture content, and mowed height shall be used. Sod

shall be of uniform density, color, and texture and shall be free of weeds and undesirable native grasses.

D. Mulch. Mulch for application to seed areas shall be straw baled, dry, unweathered, and shall show no signs of discoloration and mold damage. Material containing excessive amounts of weed or crop seeds will not be acceptable. Mulch shall be applied at a rate of not less than 100 pounds per one thousand square feet.

E. Mulch Overspray. Mulch Overspray shall be either virgin wood cellulose fibers or recycled paper mulch. The mulch shall be produced by either the ground or cooked fiber process, shall not be water soluble and shall have the following properties.

Property	Requirement
Moisture Content, percent by weight, max	15
Organic Matter-Wood Fiber, percent by weight, min	80
pH	4.3-8.5

F. Erosion Control Blankets. Biodegradable wood excelsior, straw, or coconut-fiber mat enclosed in a photodegradable plastic mesh shall be installed according to the manufacturer's recommendations on finished slopes greater than 4:1.

205.3 Soil Preparation. Contractor shall limit soil preparation to areas that will be planted in the immediate future. Areas to be prepared shall have the soil loosed to a minimum depth of four inches. For lawn areas, stones larger than one and one half (1½) inches shall be removed. For field areas, stones larger that four inches shall be removed. Areas shall be graded to a smooth, even surface with loose, uniformly fine texture. Soil shall be rolled and raked to remove ridges and fill depressions to meet finish grades. Trash, debris, and other objects that may interfere with planting or maintenance operations shall be removed.

205.4 Seeding. Seed shall be sowed with a spreader or seeding machine at the rates specified and during a time of year recommended by the manufacturer. Seed shall be evenly distributed by sowing equal quantities in two directions at right angles to each other. Seed in lawn areas shall be raked slightly into the top one-eighth inch of topsoil, rolled lightly, and watered.

205.5 Mulching. Mulch shall be spread uniformly in a continuous blanket according to the specified rates. Mulch shall be spread by hand, blower, or other suitable equipment.

205.6 Mulch Overspray. Mulch overspray shall be applied over the mulch as a separate operation. Mulch overspray shall be applied per the manufacturer's recommendations at a minimum rate of 750 pounds per acre.

205.7 Sod. All sod used shall be the same type as removed or damaged, shall be best quality, and, when placed, shall be live fresh growing grass with at least one and one half inches of soil adhering to the roots. All sod shall be procured from areas where soil is fertile and contains a high percentage of loamy topsoil and from areas that have been grazed or mowed sufficiently to form a dense turf.

Sod shall be transplanted within twenty-four hours from the time it is harvested, unless stacked at its destination in a suitable manner. All sod in stacks shall be kept moist and protected from exposure to the sun and from freezing. In no event shall more than one week elapse between cutting and planting.

Before placing sod, all shaping and dressing of the areas shall have been completed. After shaping and dressing, fertilizer, as specified, shall be applied uniformly in the manner and amounts recommended by the manufacturer, and harrowed lightly. Sod shall follow immediately. The laying of sod shall only occur during the period from March 15 to October 1, unless otherwise approved by the Engineer.

205.8 Hydroseeding. All slopes greater than a 4:1 slope shall be hydroseeded. The Contractor shall select and submit appropriate hydroseeding mixture after an evaluation of site conditions is performed with respect to: soil conditions, site topography, season and climate, vegetation types, maintenance requirements, sensitive adjacent areas, water availability, and the plan for permanent vegetation. When seed or fertilizer is applied with a hydraulic seeder, the rate of application shall be not less than one thousand gallons of slurry per acre. When using a hydraulic seeder, the fertilizer nutrients and seed shall be applied in two separate operations. Follow-up applications shall be made as needed to cover weak spots. All seeded areas shall be inspected for failures and re-seeded, fertilized, and mulched within the planting season, using not less than half the original application rates. After any rainfall event, the Contractor shall be responsible for maintaining all slopes to prevent erosion.

205.9 Maintenance. Contractor shall maintain all areas until final acceptance of the project. Maintenance shall include but not be limited to repair of erosion damage, reseeding, maintenance of mulch, mowing, and watering. At the end of the maintenance period, a healthy, uniform, close stand of grass has been established, free of weeds and surface irregularities, with coverage exceeding 80% over any ten square foot area and bare spots not exceeding five inches by five inches.

SECTION 206 – INFILTRATION TRENCH

206.1 Scope. The work covered by this section consists of furnishing all labor, equipment, and materials and performing all operations, including maintenance, in connection with placing an infiltration trench according to the lines, grades, and type, as shown on the Plans.

206.2 Materials.

A. Pipe. Infiltration Trench pipe shall be Schedule 40 or SDR 35 Polyvinyl Chloride (PVC). The pipe shall be perforated with 3/8 inch diameter holes. Two holes shall be facing down and the pipe shall be wrapped in filter fabric.

B. Aggregate. 2 inch clean stone shall be placed in the infiltration trench and meet the following sieve analysis.

Sieve	Percent by Weight (Mass)
Passing 2-inch	100
Passing 1½-inch	65 – 85
Passing 1-inch	25 – 45
Passing ½-inch	0 – 10

206.3 Design. The infiltration trench depth, length, and width will vary according to the site requirements. The design shall take into consideration the surrounding soil percolation rates. The trench slopes shall not be greater than 3:1 and shall be seeded and mulched per this Section. See the Standard Drawings for additional information.

SECTION 207 – PAYMENT

207.1 Temporary Erosion and Sediment Control. Payment for Temporary Erosion and Sediment Control shall be made at the contract unit price and shall include the cost of all materials, labor, equipment, installation, relocation, and maintenance, and all else necessary to provide a complete and functional project as outlined on the Plans and specified in these Specifications. If no pay item for Temporary Erosion and Sediment Control is included in the contract, it shall be considered incidental to the work and no direct payment will be made. Maintenance and effective erosion and sediment control will be a condition for recommendation of progress payment applications.

207.2 Temporary Rock Ditch/Inlet Check. Payment for Temporary Rock Ditch/Inlet Check shall be made at the contract unit price and shall include the cost of all materials, labor, equipment, installation, relocation, and maintenance, and all else necessary to provide a complete and functional project as outlined on the Plans and as specified in these Specifications. If no pay item for Temporary Rock Ditch/Inlet Check is included in the contract, it shall be considered incidental to the work and no direct payment will be made. Maintenance and effective erosion and sediment control will be a condition for recommendation of progress payment applications.

207.3 Permanent Erosion and Sediment Control. Payment for Permanent Erosion and Sediment Control shall be made at the contract unit price and shall include the cost of all materials, labor, equipment, installation, relocation, and maintenance, and all else necessary to provide a complete and functional project as outlined on the Plans and specified in these Specifications. If no pay item for Temporary Erosion and Sediment control is included in the contract, it shall be considered incidental to the work and no direct payment will be made. Maintenance and effective erosion and sediment control will be a condition for recommendation of progress payment applications.

207.4 Fertilizer, Lime, Seed and Mulch. Payment for Fertilizer, Lime, Seed and Mulch shall be made at the contract unit price and shall include the cost of all materials, labor, equipment, installation, relocation, and maintenance, and all else necessary to provide a complete and functional project as outlined on the Plans and as specified in these Specifications. If no pay item for Fertilizer, Lime, Seed and Mulch is included in the contract, it shall be considered incidental to the work and no direct payment will be made. All disturbed areas outside of authorized construction limits shall be fertilized, limed, seeded and mulched at the Contractor's expense.

207.5 Erosion Control Blanket. Payment for Erosion Control Blanket shall be made at the contract unit price and shall include the cost of all materials, labor, equipment, installation, relocation, and maintenance, and all else necessary to provide a complete and functional project as outlined on the Plans and as specified in these Specifications. If no pay item for Erosion Control Blanket is included in the contract, it shall be considered incidental to the work and no direct payment will be made. All disturbed areas outside of authorized construction limits shall be erosion control blanketed at the Contractor's expense.

207.6 HydroSeeding. Payment for HydroSeeding shall be made at the contract unit price and shall include the cost of all materials, labor, equipment, installation, relocation, and maintenance, and all else necessary to provide a complete and functional project as outlined on the Plans and as specified in these Specifications. If no pay item for HydroSeeding is included in the contract, it shall be considered incidental to the work and no direct payment will be made. All disturbed areas outside of authorized construction limits shall be hydroseeded at the Contractor's expense.

207.7 Mulch Overspray. Payment for Mulch Overspray shall be made at the contract unit price and shall include the cost of all materials, labor, equipment, installation, relocation, and maintenance, and all else necessary to provide a complete and functional project as outlined on the Plans and as specified in these Specifications. If no pay item for Mulch Overspray is included in the contract, it shall be considered incidental to the work and no direct payment will be made. All disturbed areas outside of authorized construction limits shall be mulch oversprayed at the Contractor's expense.

207.8 Infiltration Trench. Payment for Infiltration Trench shall be made at the contract unit price and shall include the cost of all materials, labor, equipment, installation, relocation, and maintenance, and all else necessary to provide a complete and functional project as outlined on the Plans and specified in these Specifications. If no pay item for Infiltration Trench is included in the contract, it shall be considered incidental to the work and no direct payment will be made.

DIVISION 300 – EARTHWORK

SECTION 301 – CLEARING, GRUBBING, AND TRIMMING

301.1 Scope. The work covered by this section consists of furnishing all labor, equipment, and materials and performing all operations, in connection with removing or altering existing vegetation from the project area. The Contractor shall preserve without damage the vegetation designated to remain. All trees, stumps, brush, and hedge not designated to remain shall be cleared and/or grubbed as required and shall be disposed of by the Contractor, off of City property, subject to approval of the Engineer, and in accordance with applicable Federal, State and local regulations.

301.2 Tree Preservation and Protection. The Contractor shall implement appropriate measures to ensure proper protection of existing trees ≥ 4 inches in diameter from damage due to construction activities. Unless otherwise directed by the City, all trees within or near the project limits that are not designated to be removed on the Plans shall be afforded protection. The City reserves the right to change the protection status due to tree health, aesthetics, or other factors, and mark the tree for removal by the Contractor.

301.3 Grubbing. Grubbing shall consist of removing, cutting, and disposing of all brush, vegetation, logs, stumps, rubbish and other materials occurring within the limits of the improvement which will interfere with the excavation or which are unsuitable to be left in the roadway foundation. This shall also include the cutting, removing, and disposing of all trees and stumps except those that will not interfere with the construction and not shown on the Plans. The Contractor shall exercise due care to prevent marring or scarring of the trees that are to remain. Stumps and roots in excavated or fill areas where depth of excavation or fill does not exceed three (3) feet shall be removed to a depth of eighteen (18) inches below subgrade. In fill areas where more than three (3) feet of embankment is required, trees and stumps shall be cut off at the surface of the ground.

301.4 Stripping. The Contractor shall strip all areas where excavation or embankment is to be made. Stripping shall include the removal of material such as sod, grass, crop residue, sawdust, and decayed vegetative matter from the surface of the ground. The material shall be stockpiled for future use or disposed of by the Contractor, off of City property, subject to approval of the Engineer, and in accordance with applicable Federal, State and local regulations

301.5 Burning. In order for the Contractor to burn cleared/grubbed material on the project site, he shall first obtain permits from the Cape Girardeau Fire Department and Department of Natural Resources for such burning activity. All material that remains after the burning is completed shall be disposed of by the Contractor, off of City property, subject to approval of the Engineer, and in accordance with applicable Federal, State and local regulations.

301.6 Tree Trimming. Within the construction limits of the project, the Contractor shall trim any tree which does not provide nine feet of vertical clearance above any sidewalk and fourteen feet of vertical clearance above any street unless otherwise approved by the Engineer. Trees shall be shaped at the direction of the Engineer.

SECTION 302 – REMOVAL OF IMPROVEMENTS

302.1 Scope. The work covered by this section consists of the removal of existing above-grade and below-grade improvements as indicated and as necessary to facilitate new construction. Existing sidewalks, curbs, pavements, soil and structures within the limits of construction shall be removed by the Contractor, as indicated on the Plans.

302.2 Demolition of Structures. Demolition of buildings and structures including foundations and slabs shall be specified on the Plans.

302.3 Pavements. All pavement types, concrete base courses, curb and gutter sections and driveways, shall be removed in accordance with Division 700 of these Specifications if applicable. No angle cuts shall be allowed. Sidewalks shall be removed to the joint, unless otherwise approved by the Engineer. Saw-cutting the full depth of existing pavements shall be used to insure the breakage of pavement along straight lines. Sufficient removal shall be made to provide for proper grades and connections in the new work.

302.4 Underground Pipes. Abandonment or removal of certain underground pipe or conduits shall be indicated on the Plans. If abandonment is involved, the method of fill and the fill material shall be indicated as well.

302.5 Disposal. All removed materials, shall be disposed of by the Contractor, off of City property, subject to approval of the Engineer, and in accordance with applicable Federal, State and local regulations.

SECTION 303 – EXCAVATION

303.1 Scope. The work covered by this section consists of excavation of all materials encountered within the limits of the work. Excavation shall be performed in accordance with the lines, grades, thicknesses, and typical cross sections shown on the Plans, or established by the Engineer.

303.2 Classification of Excavated Materials. Classification of Excavated Materials shall be as follows:

A. Rock. Rock is defined as being sandstone, limestone, chert, granite, siltstone quartzite, slate, shale occurring in its natural undisturbed state, hard and unweathered, in ledges six inches or more in thickness or similar material in masses more than 1½ cubic yard in volume. Should rock be encountered in two or more ledges, each ledge being more than six inches thick and with interlying strata of earth, clay, shale, or gravel not more than twelve inches thick in each stratum, the entire volume between the top of the top ledge and bottom of the bottom ledge will be classified as rock.

B. Other. All materials not classified as rock shall be unclassified.

303.3 Excavation. In areas where earth is encountered at the subgrade elevation, the subgrade shall be proof-rolled with a loaded scraper or loaded tandem axle dump truck. Any soft or unsuitable material detected by proof-rolling shall be removed and replaced with suitable material, placed and compacted as specified herein.

In areas where rock is encountered at the subgrade elevation, the subgrade shall be undercut a minimum of six inches and replaced with compacted fill. The fill shall be thoroughly compacted to 95% of maximum dry density at a moisture content ranging from -2 to +3 percent relative to the optimum moisture content as determined by the ASTM D698 Standard Test Method for Laboratory Compaction Characteristics of Soil Using Standard Effort (12,400 ft-lbf/ft3 (600 kN-m/m3)) (i.e. ASTM 698 Standard Proctor Test).

After shaping to line, grade, and cross section, the subgrade shall be compacted to 95% of maximum dry density at a moisture content ranging from -2 to +3 percent relative to the optimum moisture content as determined by ASTM D698 Standard Proctor Test. Where this does not provide minimum compaction as specified, the subgrade shall be scarified and recompacted to those requirements. This operation shall include any reshaping and wetting or drying required to obtain proper compaction.

Any soft or unsuitable material, designated by the Engineer, shall be scarified to a minimum depth of six

inches, moisture conditioned, and recompacted so that surface materials of the subgrade will be as compacted and well bonded with the first layer of the fill or embankment as specified for subsequent layers. This method is incidental and no direct payment will be made. If the Engineer agrees that this method will not be effective, the material shall be removed and replaced with suitable material as approved by the Engineer. Payment for this shall be at the contract unit price or if no price is in the contract, then payment shall be two times the excavation unit price plus one times the embankment unit price.

303.4 Blasting. No blasting shall be allowed unless otherwise approved by the Engineer.

SECTION 304 – EMBANKMENT

304.1 Scope. The work covered by this section consists of constructing fills and embankments according to the lines, grades, thicknesses, and cross sections shown on the Plans.

304.2 Embankments. To the maximum extent available, excess suitable material obtained from excavation shall be used for the construction of fills and embankments. When the amount of material excavated is not sufficient to construct the embankments shown on the Plans, the Contractor shall supply the necessary material, from offsite sources, subject to approval of the Engineer and in accordance with applicable Federal, State and local regulations. All material placed in earth fills of the embankments shall be free from brush, stumps, logs, roots, debris, and organic or other deleterious materials. No frost or frozen material shall be incorporated in embankments.

304.3 Preparation for Embankment. Prior to placing fill material for embankment, the subgrade shall be proof-rolled with a loaded scraper or loaded tandem axle dump truck. Any soft or unsuitable material, designated by the Engineer, shall be scarified to a minimum depth of six inches, moisture conditioned, and recompacted so that surface materials of the subgrade will be as compacted and well bonded with the first layer of the fill or embankment as specified for subsequent layers. This method is incidental and no direct payment will be made.

304.4 Placement and Compaction. All earth fill and earth embankment materials shall be placed in approximate horizontal layers not to exceed eight inches in uncompacted thickness. Material deposited in piles or windrows by excavating and hauling equipment shall be spread and leveled before compaction.

Each layer of material for earth fill of embankments shall have the best practicable moisture content for satisfactory compaction. The material in each layer shall be wetted or dried as required and thoroughly mixed to ensure uniform moisture content and adequate compaction. Each layer shall be thoroughly compacted to 90% of maximum dry density at a moisture content ranging from -2 to +3 percent relative to the optimum moisture content as determined by the ASTM D698 Standard Proctor Test; with the exception of the top eighteen inches, which should be to 95%. If the material fails to meet the density or moisture contents specified, compaction methods shall be altered.

Occasional rocks exceeding eight inches shall be disposed of into the embankment outside of the limits of the proposed travel lanes. The thickness of this layer may be increased if necessary in order to accommodate the rocks, but shall not exceed twelve inches in compacted thickness.

If the excavated material consists predominantly of rock, the embankment layer thickness may be the average size of the larger rock, but not exceeding 24 inches. Larger rocks shall be reduced in size to meet the above requirements or removed from the project limits and disposed of in accordance with Federal, State and local regulations. The rock fill shall be well graded so the voids between larger rocks

are filled with smaller material. Each layer of rock fill shall be thoroughly compacted.

When embankment is to be placed on hillsides or when new embankment is to be constructed against existing embankments, the existing slopes that are steeper than 6:1 when measured at right angle to the roadway shall be continuously benched in not less than twelve inch rises over those areas where it is required as the work is brought up in layers. Benching shall be sufficient width to permit placing and compacting operation. Each horizontal cut shall begin at the intersection of the ground line and the vertical side of the previous bench. Existing slopes shall also be stepped to prevent any wedging action of the embankment against structures. No direct payment will be made for the material cut out or for its compaction along with the new embankment material.

Wherever a trench is to pass through a fill or embankment, the fill or embankment material shall be placed and compacted to an elevation not less than twelve inches above the top of pipe elevation before the trench is excavated.

304.5 Drainage Maintenance. If it is necessary in the prosecution of the work to interrupt or obstruct the natural drainage of the surface, or the flow of the artificial drainage, the Contractor shall provide for the same during the progress of the work, in such manner that no damage will result to either public or private interests.

SECTION 305 – TRENCH EXCAVATION AND BACKFILL

305.1 Scope. Trench excavation shall refer to any and all material excavated for installation of pipes, structures, or other items in accordance with the Plans; and shall include all subsequent handling and disposal of such material, together with the preparation of all subgrade. Also included in the work under this item shall be all sheeting, shoring, bracing, protection of adjacent property, preparation of all subgrades, storage of excavated materials where necessary, backfilling, tamping, and grading. The removal or diversion of surface or seep underground water shall also be included under trench excavation. Tunneling/Boring may be permitted or required at the discretion of the Engineer.

305.2 Classification of Excavated Materials. Excavation shall be classified according to Section 303.2 of these Specifications.

305.3 Trench Protection. Steel Plate Bridging (SPB) may be allowed over an open excavation within the pavement surface on a temporary basis only as authorized by the Engineer. Steel Plate Bridging shall be limited to thirty days, unless otherwise approved by the Engineer. Proper advanced warning signs shall be placed before the SPB. Embedded SPB are required during the winter months, except for concrete and brick paved streets where a rubber ramp is required. Winter month's placement is only allowed as authorized by the Engineer. The SPB shall be marked with the owner's name and telephone number. The Engineer has the authority to determine and approve all emergency applications of steel plates.

305.4 Removal of Improvements. The Contractor shall remove improvements as specified in Section 302 of these Specifications.

305.5 Lines and Grades. Pipes and structures for sanitary sewer, storm sewer, and water mains shall be installed in accordance with the lines and grades indicated on the Plans and in accordance with Division 100 of these Specifications. Trenches shall not be opened in advance of the pipe being laid beyond what is necessary to expedite the work. The approval of the Engineer shall be obtained prior to opening more trench than the Contractor can place pipe in during that working day. At no time shall there be more than three hundred feet of trench opened in advance of the pipe laying operations and this length of open trench may be shortened by order of the Engineer. Trenches shall be excavated to a width that will provide adequate working space, but the maximum width of the trench at the top of the pipe shall not

exceed the manufacturer's recommendation.

Trenches shall be excavated below the bottom of the pipe to provide space for the specified depth of pipe bedding shown on the Standard Drawings. Trenches in rock, gravelly soil, or other unyielding materials shall be excavated below the bottom of the pipe at least six inches. The space beneath the pipe shall be refilled with the specified bedding material. Bell holes shall be excavated at each joint to provide full-length barrel support of the pipe and to prevent point loading at the bells or couplings.

305.6 Sheeting and Shoring. The Contractor shall conduct all work in compliance with current Occupational Safety and Health Act (OSHA) standards. The Contractor shall be responsible for all damage caused by the prosecution of the work.

Whenever a movable steel trench box is used in place of sheeting, care shall be taken to prevent the pipe from moving when the steel box is moved. The pipe shall be secured to prevent longitudinal movement.

305.7 Dewatering. The Contractor shall furnish and operate sufficient pumps and equipment and shall provide all materials, labor, etc., required to prevent interference with any work by water, ice, or snow. The Contractor shall correct at his expense damage of any kind resulting from insufficient pumping facilities or lack of proper conduct of the work. No structure or pipe shall be laid in water and water shall not be allowed to run into or over any concrete work or into or through any pipe, unless approved by the Engineer. Discharge from any dewatering operation shall be conducted to natural drainage channels, storm sewers, or a reservoir as approved by the Engineer.

Removing water and surface water from the trench shall be the responsibility of the Contractor. Compensation for this work shall be considered incidental to the work and no direct payment will be made.

305.8 Trench Stabilization. When the bottom of the trench or the subgrade is found to be unstable or to include ashes, cinders, refuse, organic material, or other unsuitable material, such material shall be removed to a minimum of at least three (3) inches below the grade line or the depth directed by the Engineer and replaced under the directions of the Engineer with clean, stable backfill material. The bedding shall be consolidated and leveled so that the pipe may be installed.

When the bottom of the trench or the subgrade is found to consist of material that is unstable to such a degree that, in the judgment of the Engineer, it cannot be removed, a foundation for the pipe and appurtenances shall be constructed with approval of the Engineer. The expense for the installation of such a foundation, unless provided for on the Plans, shall not be considered a normal cost for pipe installation and could be paid for with a Change Order after approval by the Engineer.

305.9 Pipe Bedding. If rock is encountered within six inches of the bottom of the structure or pipe, the Contractor shall excavate a minimum of six inches below the bottom of structure or pipe and backfill with aggregate bedding material. Pipe Bedding materials and construction requirements shall be in accordance to Division 400 of these Specifications.

305.10 Trench Backfill. Trench Backfill materials shall be in accordance to one of the following:

A. Earth Backfill. All backfill material shall be free from refuse, vegetable or organic material, boulders, rocks or stones, frozen soil, or other material that, in the opinion of the Engineer, is unsuitable. No rock or stone having a dimension larger than eight inches shall be placed within three feet of the top of the pipe. Large stones may be placed in the remainder of the trench backfill if well separated and arranged so not to interfere with backfill compaction. Excavated material may be used for backfill if it meets the above stated specifications. If excavated material is not suitable, the

Contractor shall supply the necessary material, from offsite sources, subject to approval of the Engineer and in accordance with applicable Federal, State and local regulations.

Where compaction is required, the maximum compacted thickness of any one layer shall not exceed six inches. The earth backfill shall be uniformly spread in successive layers of such depth that when compacted, the backfill will have the approximate thickness specified. The moisture content of the backfill material and the compactive effort applied to the backfill material shall be sufficient to produce a density of at least 95% of the optimum dry density, as determined by the ASTM D698 Standard Proctor Test.

B. **Aggregate Backfill.** See Division 400 of these Specifications. Aggregate backfill shall be used beneath streets, pavements, drives, curbs, walks, and other surface construction.

Trench Backfill: Trenches shall be backfilled immediately after the pipe is laid. No water shall be permitted to rise in trenches that have not been backfilled after the pipe is in place.

Backfill adjacent to Top of Pipe: The first one foot of backfill over the top of pipe shall be hand placed or as otherwise approved by Engineer.

Upon completion of specified hand fill, the balance of the trench shall be mechanically filled to at least three inches above the proposed finished grade of the surrounding terrain.

In open fields and areas where minor settlement will not result in damage to property or injury to persons, backfill material will not have to be compacted to maximum density. All sunken trenches in these areas shall be refilled, leaving the surface over the trenches slightly mounded (six to ten inches) and in a condition satisfactory to the Engineer. Streets, alleys, driveways, and Rights-of-Way shall be kept in passable condition by refilling shrunken trenches, laying temporary paving over trenches, provide steel plate bridging, etc. to the satisfaction of the Engineer.

Upon completion of backfill, appropriate Permanent Erosion Control, Seed and Mulch shall be placed in accordance to Section 205 of these Specifications.

SECTION 306 – SUBGRADE

306.1 Scope. The work covered by this section consists of preparing the subgrade upon which a base is to be constructed.

306.2 Compaction. The subgrade shall be brought to a firm, unyielding surface All soft, spongy, or yielding spots, and all organic material shall be entirely removed and the space refilled with suitable material.

The subgrade shall be compacted to 95% of maximum dry density at a moisture content ranging from -2 to +3 percent relative to the optimum moisture content as determined by the ASTM D698 Standard Proctor Test. Where minimum compaction as specified is not achieved, the subgrade shall be scarified and recompacted to those requirements. This operation shall include any reshaping and wetting or drying required to obtain proper compaction. All soft or otherwise unsuitable material shall be removed and replaced with suitable material.

When the concrete pavement is to be constructed over an old roadbed composed of gravel or macadam, the old roadbed shall be entirely scarified and the material spread for the full width of the roadbed and rolled. All voids shall be filled with fine material and rolled to make a dense, tight surface.

306.3 Proof-rolling. If determined necessary by the Engineer, the sub-grade shall be proof-rolled with a loaded scraper or loaded tandem axle dump truck. Any soft or unsuitable material detected by proof-

rolling shall be removed and replaced with earth fill, placed and compacted as specified herein.

Any attempt to compact subgrade under forms set for pavement, curb, or curb and gutter, where subgrade is low, will not be permitted. The forms shall be removed and the subgrade corrected and compacted, and then the forms replaced to proper grade and alignment.

SECTION 307 – FINAL GRADING

307.1 Scope. The work covered by this section consists of constructing final grade and placement of topsoil, according to the lines, grades, thicknesses, and cross sections shown on the Plans.

307.2 Final Grading. Slopes in both excavation and embankment shall be neatly dressed to the lines shown on the cross sections, unless other lines are approved by the Engineer. Use of graders or other power equipment will be permitted for final grading and dressing of slopes, provided the result is uniform and equivalent to hand work. All surfaces shall be graded to secure effective drainage. Unless otherwise indicated, a slope of at least one percent (1%) shall be provided.

307.3 Placement of Topsoil. All cuts, fills, embankments, and other areas which have been disturbed or damaged by construction operations shall be surfaced with topsoil to a depth of at least four inches. Topsoil shall be of a quality at least equal to the existing topsoil in adjacent areas, free from trash, stones, and debris, and well suited to support plant growth. Final grading and surfacing shall be smooth, even, and free from clods and stones larger than one inch in greatest dimension, weeds, brush, and other debris.

307.4 Disposal of Excess Excavated Materials. Material in excess of that needed to construct the embankments shown on the Plans shall be the property of the Contractor. The excess material and all debris, stones, logs, stumps, roots, and other unsuitable materials, shall be removed from the site and disposed of by the Contractor, in accordance with applicable Federal, State and local regulations. Broken concrete and other debris resulting from pavement or sidewalk removal, excavated rock in excess of the amount permitted to be installed in trench backfill, debris encountered in excavation work, and other similar waste materials shall be disposed of by the Contractor in a satisfactory manner off of City Property subject to approval by the Engineer and in accordance with applicable Federal, State and local regulations.

SECTION 308 – PAYMENT

308.1 Clearing and Grubbing. Payment for clearing and grubbing shall be made at the contract unit price and shall include the cost of all materials, labor, equipment, installation, relocation, and maintenance, and all else necessary to provide a complete and functional project as outlined on the Plans and as specified in these Specifications. If no pay item for clearing and grubbing is included in the contract, it shall be considered incidental to the work and no direct payment will be made.

308.2 Removal of Improvements. Payment for removal of improvements shall be made at the contract unit price and shall include the cost of all materials, labor, equipment, installation, relocation, and maintenance, and all else necessary to provide a complete and functional project as outlined on the Plans and as specified in these Specifications. If no pay item for removal of improvements is included in the contract, it shall be considered incidental to the work and no direct payment will be made.

308.3 Rock Excavation. If rock is encountered, the Engineer shall be notified prior to excavation. Quantities shall be determined by field measurements made by the Engineer. A maximum overbreak of six inches will be allowed. Payment for such excavation shall be made at the contract unit price and shall include

the cost of all materials, labor, equipment, installation, relocation, and maintenance, and all else necessary to provide a complete and functional project as outlined on the Plans and as specified in these Specifications. If no pay item for Rock Excavation is included in the contract, it shall be considered incidental to the work and no direct payment will be made.

308.4 Other Excavation. Payment for Excavation (all excavation other than rock) shall be made at the contract unit price and shall include the cost of all materials, labor, equipment, installation, relocation, and maintenance, and all else necessary to provide a complete and functional project as outlined on the Plans and as specified in these Specifications. If no pay item for Excavation is included in the contract, it shall be considered incidental to the work and no direct payment will be made.

308.5 Embankment. Payment for Embankment shall be made at the contract unit price and shall include the cost of all materials, labor, equipment, installation, relocation, and maintenance, and all else necessary to provide a complete and functional project as outlined on the Plans and as specified in these Specifications. If no pay item for Embankment is included in the contract, it shall be considered incidental to the work and no direct payment will be made.

308.6 Trench Excavation and Backfill. No direct payment shall be made for Trench Excavation, Backfill or other work described in Section 305.

308.7 Subgrade. No direct payment shall be made for Subgrade preparation or other work described in Section 306.

308.8 Final Grading. No direct payment shall be made for Final Grading or other work described in Section 307.

DIVISION 400 – AGGREGATES

SECTION 401 – AGGREGATE BEDDING/INITIAL BACKFILL

401.1 Scope. The work covered by this section consists of furnishing all labor, equipment, and materials and performing all operations, in connection with placing bedding under pipes and structures as specified according to the lines, grades, and type, as shown on the Plans.

401.2 Materials. All bedding shall be crushed stone aggregate (95% passing a ½" screen, but no more than 10% passing a #200 sieve) and free from debris, organic matter, and stones larger than one inch in its greatest dimension, and shall be compacted into place.

401.3 Placement. See Standard Drawings for bedding placement.

SECTION 402 – AGGREGATE TRENCH BACKFILL

402.1 Scope. The work covered by this section consists of furnishing all labor, equipment, and materials and performing all operations, in connection with placing aggregate backfill on and around piping, junction boxes, manholes, inlets, etc. that are located beneath streets, pavements, future pavements, drives, curbs, walks, and other surface construction as specified according to the lines, grades, and type shown on the Plans.

402.2 Materials. Type 5 aggregate for aggregate trench backfill shall conform to the *Missouri Standard Specifications for Highway Construction,* latest edition and meet the following sieve analysis:

Sieve	Percent by Weight (Mass)
Passing 1-inch	100
Passing ½-inch	60 – 90
Passing No. 4	35 – 60
Passing No. 30	10 – 35
Passing No. 200	0 – 15

402.3 Placement. See the Standard Drawings for backfill placement.

402.4 Compaction. The aggregate shall be compacted to the 95% ASTM D698 Standard Proctor Test maximum dry density.

SECTION 403 – AGGREGATE BASE COURSE

403.1 Scope. The work covered by this section consists of furnishing all labor, equipment, and materials and performing all operations, in connection with placing one or more courses of aggregate on a prepared subgrade according to the lines, grades, and thicknesses, and typical cross sections shown on the Plans. The minimum compacted thickness shall be four inches, unless otherwise specified.

403.2 Materials.

A. Type 5 Aggregate. Type 5 aggregate for base shall conform to the *Missouri Standard Specifications for Highway Construction,* latest edition and meet the following sieve analysis:

Sieve	Percent by Weight (Mass)
Passing 1-inch	100
Passing ½-inch	60 – 90
Passing No. 4	35 – 60
Passing No. 30	10 – 35
Passing No. 22	0 – 15

B. Type 7 Aggregate. Type 7 Aggregate for base shall conform to the *Missouri Standard Specifications for Highway Construction,* latest edition and meet the following sieve analysis:

Sieve	Percent by Weight (Mass)
Passing 1½-inch	100
Passing 1-inch	70 – 100
Passing No. 8	15 – 50
Passing No. 200	0 – 12

403.3 Prep-work. The areas to receive aggregate base course shall be prepared according to Section 306.

403.4 Placement. The maximum compacted thickness of any one layer shall not exceed six inches. The aggregate base shall be uniformly spread in successive layers of such depth that when compacted, the base will have the approximate thickness specified on the Plans.

403.5 Compaction. The aggregate shall be compacted to the 95% ASTM D698 Standard Proctor Test maximum dry density.

SECTION 404 – ROCK DITCH LINER

404.1 Scope. The work covered by this section consists of furnishing all labor, equipment, and materials and performing all operations, in connection with placing rock ditch liner according to the lines, grades, and type, as shown on the Plans.

404.2 Materials.

A. Rock Ditch Liners. Shall conform to the *Missouri Standard Specifications for Highway Construction,* latest edition. Individual rock fragments shall be dense, sound, and resistant to abrasion and shall be free from cracks, seams, and other defects. The rock for riprap shall be obtained from any quarry supplying material certified by MoDOT or the U.S. Army Corps of Engineers.

1. **Type 1 Rock Ditch Liner** shall consist of material with a predominant rock size of three inches, a maximum rock size of six inches and a gradation such that no more than 15 % will be less than one inch.
2. **Type 2 Rock Ditch Liner** shall consist of material with a predominant rock size of 6 inches, a maximum rock size of 10 inches and a gradation such that no more than 15 percent will be less than three inches.
3. **Type 3 Rock Ditch Liner** shall consist of material with a predominant rock size of twelve inches, a maximum rock size of twenty inches and a gradation such that no more than 15 % will be less than four inches.
4. **Type 4 Rock Ditch Liner** shall consist of material with a predominant rock size of nineteen inches, a maximum rock size of twenty-eight inches and a gradation such that no more than 15% will be less than six inches.

B. Geotextile Fabric. Shall conform to the *Missouri Standard Specifications for Highway Construction,* latest edition.

C. **Bedding Material.** Bedding material shall be used under Type 3 and Type 4 Rock Ditch Liner. Bedding material shall consist of crushed stone with a gradation consisting of 100% passing the 3-inch sieve, 30-70% passing the 1½ inch sieve and 0 to 15% passing the No. 4 sieve.

404.3 Placement. The rock ditch liner shall be placed to the approximate shape and thickness as shown on the Plans for the specified ditch or as directed by the Engineer. The rock shall be placed on the subgrade or on geotextile fabric as shown on the Plans.

SECTION 405 – ROCK BLANKET

405.1 Scope. The work covered by this section consists of furnishing all labor, equipment, and materials and performing all operations, in connection with placing a protective blanket of rock or broken concrete on slopes or stream banks according to the lines, grades, and type, as shown on the Plans.

405.2 Materials. Shall conform to the *Missouri Standard Specifications for Highway Construction,* latest edition. Rock Blanket shall be durable stone or broken concrete containing a combined total of no more than 10% of soil, sand, shale or non-durable rock. The material shall contain a large percentage of pieces as large as the thickness of the blanket will permit, with enough smaller pieces to fill the larger voids. Acceptance of quality and size of material will be made by visual inspection at the job site.

A. **Type 1 Rock Blanket.** At least 40% of the mass shall be of pieces having a volume of one cubic foot or more.

B. **Type 2 Rock Blanket.** At least 60% of the mass shall be of pieces having a volume of one cubic foot or more

C. **Geotextile Fabric.** Shall conform to the *Missouri Standard Specifications for Highway Construction,* latest edition.

405.3 Prep-work. The areas to receive rock blanket of any type shall be dressed smooth to the slopes or shapes called for on the Plans and shall be free from stumps, organic matter, or waste material. A toe trench shall be provided to key the bottom course of the rock blanket. The trench, if not shown on Plans, shall be two feet in depth. All material, regardless of the type or kind, shall be placed reasonably close to the lines and depths called for on the Plans.

405.4 Placement. The rock blanket shall be placed to ensure uniform distribution of the larger rock pieces with the smaller fragments filling the voids. The rock blanket may be mechanically placed in such a manner to ensure a well-keyed, densely placed, uniform layers of material at the specified nominal thickness.

SECTION 406 – GABIONS

406.1 Scope. The work covered by this section consists of furnishing all labor, equipment, and materials and performing all operations, in connection with placing a welded wire fabric gabions or twisted hexagonal mesh gabions and revet mattresses at locations according to the lines, grades, and type, as shown on the Plans.

406.2 Materials. Shall conform to the *Missouri Standard Specifications for Highway Construction,* latest edition. The gabion baskets or mattresses shall be made of welded wire fabric or twisted hexagonal mesh. Aggregate used in the gabions or mattresses shall be crushed limestone with a maximum and minimum size according to the basket manufacturer's recommendations.

406.3 Placement. The gabion baskets or mattresses shall be placed according to the basket manufacturer's recommendations.

SECTION 407 – FLOWABLE FILL

407.1 Scope. The work covered by this section consists of furnishing all labor, equipment, and materials and performing all operations, in connection with placing flowable fill as specified on the Plans or otherwise permitted for compacted backfill and other cavity filling uses.

407.2 Materials. Shall conform to the *Missouri Standard Specifications for Highway Construction*, latest edition. The Contractor shall submit to the Engineer a mix design with the proportions and source of material, admixtures, dry cubic yard batch weights and actual 28-day compressive test results. The 28-day compressive strength of the mixture shall exceed 50 psi and have a maximum compressive strength of 300 psi.

Commercial mixes may be used, provided the specified strengths are obtained. If approved for use, the material shall be placed in accordance with the manufacturer's recommendations, which shall be furnished to the Engineer.

407.3 Placement. If flowable fill is placed in more than one layer, the base layer shall be roughened and free of all loose materials, prior to placement of the next layer. If the material does not harden to the required strength, the fill shall be removed and replaced with an acceptable material at the Contractor's expense.

SECTION 408 – PAYMENT

408.1 Aggregate Bedding/Initial Backfill. There will be no direct payment made for Aggregate Bedding/Initial Backfill, it shall be considered incidental to the work.

408.2 Aggregate Trench Backfill. There will be no direct payment made for Aggregate Trench Backfill, it shall be considered incidental to the work.

408.3 Aggregate Base Course. Payment for Aggregate Base Course shall be made at the contract unit price and shall include the cost of all materials, labor, equipment, installation, relocation, and maintenance, and all else necessary to provide a complete and functional project as outlined on the Plans and as specified in these Specifications. If no pay item for Aggregate Base Course is included in the contract, the aggregate base and work specified in this Section shall be considered incidental to the work and no direct payment will be made.

408.4 Rock Ditch Liner. Payment for Rock Ditch Liner shall be made at the contract unit price and shall include the cost of all materials, labor, equipment, installation, relocation, and maintenance, and all else necessary to provide a complete and functional project as outlined on the Plans and specified in these Specifications. If no pay item for Rock Ditch Liner is included in the contract, it shall be considered incidental to the work and no direct payment will be made.

408.5 Rock Blanket. Payment for Rock Blanket shall be made at the contract unit price and shall include the cost of all materials, labor, equipment, installation, relocation, and maintenance, and all else necessary to provide a complete and functional project as outlined on the Plans and as specified in these Specifications. If no pay item for Rock Blanket is included in the contract, it shall be considered incidental to the work and no direct payment will be made.

408.6 Gabions. Payment for Gabions shall be made at the contract unit price and shall include the cost of all materials, labor, equipment, installation, relocation, and maintenance, and all else necessary to provide a complete and functional project as outlined on the Plans and as specified in these Specifications. If no

pay item for Gabions is included in the contract, it shall be considered incidental to the work and no direct payment will be made.

408.7 Flowable Fill. Payment for Flowable Fill shall be made at the contract unit price and shall include the cost of all materials, labor, equipment, installation, relocation, and maintenance, and all else necessary to provide a complete and functional project as outlined on the Plans and as specified in these Specifications. If no pay item for Flowable Fill is included in the contract, it shall be considered incidental to the work and no direct payment will be made.

DIVISION 500 – FLEXIBLE PAVEMENT

SECTION 501 – MATERIALS

501.1 Scope. Provide plant-mixed, hot-laid asphalt-aggregate mixture conforming to the *Missouri Standard Specifications for Highway Construction,* latest edition. Use locally available materials and gradations, which exhibit a satisfactory record of previous installations. Material certificates signed by material producer and Contractor must be submitted, certifying that each material item complies with or exceeds specified requirements.

501.2 Bituminous Surface Course. (BP-2) Shall conform to the *Missouri Standard Specifications for Highway Construction,* latest edition.

501.3 Bituminous Leveling Course. (BP-1 or BP-2 as indicated on the Plans.) Shall conform to the *Missouri Standard Specifications for Highway Construction,* latest edition.

501.4 Bituminous Base Course. Shall conform to the *Missouri Standard Specifications for Highway Construction,* latest edition.

501.5 Tack Coat. Shall conform to the *Missouri Standard Specifications for Highway Construction,* latest edition.

SECTION 502 – ASPHALT CONSTRUCTION REQUIREMENTS

502.1 Scope. This section covers construction of flexible pavement of the thickness and width shown on the Plans. These Specifications include all materials, construction requirements, and other appurtenant work. See the Standard Drawings for minimum thickness requirements.

502.2 Weather Limitations. Bituminous mixtures shall not be placed (1) when either the air temperature or the temperature of the surface on which the mixture is to be placed is below 35 degrees F and falling, (2) on any wet or frozen surface, or (3) when weather conditions prevent the proper handling or finishing of the mixture.

502.3 Milling. The limits of milling shall be designated in the field by the Engineer. Millings are to be disposed by the Contractor, off of City property, subject to approval of the Engineer, and in accordance with applicable Federal, State and local regulations. Where the new asphaltic pavement is to join existing overlay or pavement, overlapping or sloping will not be permitted, but the old asphalt shall be milled out for a square cut joint. Where it joins existing concrete pavement, the asphalt shall be thickened by tapering down to the full thickness of the concrete in the last ten feet or as determined by the Engineer. In areas where the milling is against the curb, care shall be taken to remove all asphalt against the concrete. At butt-joints, temporary suitable material shall be placed and maintained against the existing pavement prior to placement of the asphalt.

502.4 Manhole and Valve Guard Adjustments. When it is necessary to adjust a manhole or valve guard to match the grade of the improved street, the Contractor shall use appropriate adjusting ring for the field condition, as shown in the APL.

502.5 Surface Preparation. The area to receive flexible pavement shall be prepared according to Sections 303, 306, and 403 of these Specifications. Paving work shall not begin until deficient base course areas have been corrected to the satisfaction of the Engineer and are ready to receive paving. If flexible pavement is being placed on an existing paved surface, that surface shall be cleaned and free of debris

sufficient to create bond with the tack coat.

502.6 Tack Coat. Apply to contact surfaces of previously constructed asphalt or Portland cement concrete and surfaces abutting or projecting into asphaltic concrete pavement. Distribute at rate of 0.02 to 0.10 gallons per square yard of surface as directed by the Engineer. Allow to dry per manufacturer's recommendation before paving.

502.7 Leveling Course. A leveling course consisting of a layer of variable thickness shall be spread to the desired grade and cross section to eliminate irregularities in the existing surface. Spot-leveling operations over small areas, with featheredging at high points and ends of spot areas, may be required prior to placing the leveling course. Rigid control of the placement thickness of the leveling course will be required. The mixture shall be practically free from segregation. Leveling course will be required unless otherwise specified by the Engineer.

502.8 Placing Asphalt. The specified asphalt mixture shall be placed on prepared surface, spread, and struck off at a minimum temperature of 225°F. Each course shall be placed to achieve the required cross-section and compacted thickness shown on the Plans. Asphalt pavers shall place mixture in strips not less than ten feet wide, unless otherwise approved by the Engineer. After the first strip has been placed and rolled, succeeding strips shall be placed and rolling extended to overlap previous strips. Areas inaccessible to equipment shall be placed by hand.

Contractor shall exercise care in applying bituminous materials to avoid smearing of adjoining concrete surfaces. Damaged surfaces shall be cleaned or removed at the direction of the Engineer and at the Contractor's expense.

See Standard Drawings for minimum thickness requirements.

502.9 Joints. Contact surfaces between old and new pavements, or between successive days' work, shall be cleaned and tack coat applied to ensure continuous bond between adjoining work. Joints shall be constructed to have same texture, density, and smoothness as other sections of asphalt pavement.

502.10 Rolling. Rolling shall begin when mixture will bear roller weight without excessive displacement. Mixture shall be compacted with hot hand tampers or vibrating plate compactors in areas inaccessible to rollers.

A. **Breakdown Rolling.** Breakdown or initial rolling shall be accomplished by immediately following rolling of joints and outside edge. Surfaces shall be checked after breakdown rolling and displaced areas repaired by loosening and filling, if required, with hot material.

B. **Second Rolling.** Second rolling shall follow as soon as possible, while mixture is hot, and continue until mixture has been thoroughly compacted.

C. **Finish Rolling.** Finish rolling shall be performed while mixture is still warm enough for removal of roller marks and continue until roller marks are eliminated and course has attained maximum density.

502.11 Shoulder Treatment. After the overlay has been placed, the shoulders shall be restored. Where applicable, the material along the edges shall be pulled in and then compacted with a vibratory roller.

502.12 Opening to Traffic. Asphalt pavement shall not be opened to vehicular traffic or Contractor's equipment until the pavement has cooled to 150 degrees Fahrenheit and hardened. Contractor shall erect proper traffic control to protect pavement from traffic until mixture has cooled enough not to become marked. The barricades used shall be standard devices per the MUTCD and of such size and weight that they are not readily movable by hand, and must be visible at night. Pavement shall be clean prior to

opening to traffic.

SECTION 503 – FIELD QUALITY CONTROL

503.1 Scope. Asphaltic concrete courses shall be tested in-place for compliance regarding thickness and surface smoothness. Unacceptable pavement shall be repaired or removed and replaced as directed by the Engineer and at the Contractor's expense.

503.2 Thickness. In-place compacted thickness will not be acceptable if exceeding the following allowable variations:
A. Surface Course: Plus or minus one quarter (1/4) inch
B. Base Course: Plus or minus one quarter (1/4) inch

503.3 Surface Smoothness. Finished surfaces of each asphaltic concrete course shall be tested for smoothness using ten foot straightedge applied parallel to centerline of paved area. Surfaces will not be acceptable if exceeding the following tolerances for smoothness:
A. Wearing Course Surface: three-sixteenth (3/16) inch
B. Crowned Surfaces: one quarter (1/4) inch

503.4 Density. The Engineer may randomly test locations. The final, in-place density of the mixture shall be 94% +/- 2% of the theoretical maximum specific gravity for all mixtures.

SECTION 504 – PAYMENT

504.1 Bituminous Surface Course. Payment for Bituminous Surface Course shall be made at the contract unit price and shall include the cost of all materials, labor, equipment, installation, relocation, and maintenance, and all else necessary to provide a complete and functional project as outlined on the Plans and specified in these Specifications. If no pay item for Bituminous Surface Course is included in the contract, it shall be considered incidental to the work and no direct payment will be made.

504.2 Bituminous Leveling Course. Payment for Bituminous Leveling Course shall be made at the contract unit price and shall include the cost of all materials, labor, equipment, installation, relocation, and maintenance, and all else necessary to provide a complete and functional project as outlined on the Plans and specified in these Specifications. If no pay item for Bituminous Leveling Course is included in the contract, it shall be considered incidental to the work and no direct payment will be made.

504.3 Bituminous Base Course. Payment for Bituminous Base Course shall be made at the contract unit price and shall include the cost of all materials, labor, equipment, installation, relocation, and maintenance, and all else necessary to provide a complete and functional project as outlined on the Plans and specified in these Specifications. If no pay item for Bituminous Base Course is included in the contract, it shall be considered incidental to the work and no direct payment will be made.

504.4 Tack Coat. Payment for Tack Coat shall be made at the contract unit price and shall include the cost of all materials, labor, equipment, installation, relocation, and maintenance, and all else necessary to provide a complete and functional project as outlined on the Plans and specified in these Specifications. If no pay item for Tack Coat is included in the contract, it shall be considered incidental to the work and no direct payment will be made.

504.5 Milling. Payment for Milling shall be made at the contract unit price and shall include the cost of all materials, labor, equipment, installation, relocation, and maintenance, and all else necessary to provide a complete and functional project as outlined on the Plans and specified in these Specifications. If no pay item for Milling is included in the contract, it shall be considered incidental to the work and no direct

payment will be made.

504.6 Manhole and Valve Guard Adjustments. Payment for Manhole and Valve Guard Adjustments shall be made at the contract unit price and shall include the cost of all materials, labor, equipment, installation, relocation, and maintenance, and all else necessary to provide a complete and functional project as outlined on the Plans and specified in these Specifications. If no pay item for Manhole and Valve Guard Adjustments is included in the contract, it shall be considered incidental to the work and no direct payment will be made.

504.7 Shoulder Treatment. Payment for Shoulder Treatment shall be made at the contract unit price and shall include the cost of all materials, labor, equipment, installation, relocation, and maintenance, and all else necessary to provide a complete and functional project as outlined on the Plans and specified in these Specifications. If no pay item for Shoulder Treatment is included in the contract, it shall be considered incidental to the work and no direct payment will be made.

DIVISION 600 – PORTLAND CEMENT CONCRETE PAVEMENT (PCCP)

SECTION 601 – MATERIALS

601.1 Scope. Provide plant-mixed cement mixture conforming to the *Missouri Standard Specifications for Highway Construction,* latest edition. Use locally available materials and gradations, which exhibit a satisfactory record of previous installations. Material certificates signed by material producer and Contractor must be submitted, certifying that each material item complies with or exceeds specified requirements.

601.2 Cement. Shall conform to the *Missouri Standard Specifications for Highway Construction,* latest edition.

601.3 Coarse Aggregate. Shall conform to the *Missouri Standard Specifications for Highway Construction,* latest edition.

601.4 Fine Aggregate. Shall conform to the *Missouri Standard Specifications for Highway Construction,* latest edition.

601.5 Air-Entraining Admixtures. Shall conform to the *Missouri Standard Specifications for Highway Construction,* latest edition.

601.6 Water. Water approved by the Missouri Department of Natural Resources for drinking purposes shall be acceptable.

601.7 Fly Ash. Shall conform to the *Missouri Standard Specifications for Highway Construction,* latest edition.

601.8 Epoxy. Shall conform to the *Missouri Standard Specifications for Highway Construction,* latest edition.

601.9 Dowel Bars. Shall conform to the *Missouri Standard Specifications for Highway Construction,* latest edition.

601.10 Tie Bars. Shall conform to the *Missouri Standard Specifications for Highway Construction,* latest edition.

601.11 Epoxy Coated Reinforcing Steel. Shall conform to the *Missouri Standard Specifications for Highway Construction,* latest edition.

601.12 Steel Welded Wire Fabric. Shall conform to the *Missouri Standard Specifications for Highway Construction,* latest edition.

601.13 Liquid Curing Compound. Shall conform to the *Missouri Standard Specifications for Highway Construction,* latest edition.

601.14 Joint Material. Shall conform to the *Missouri Standard Specifications for Highway Construction,* latest edition.

601.15 Preformed Fiber Expansion Joint Filler. Shall conform to the *Missouri Standard Specifications for Highway Construction,* latest edition.

SECTION 602 – MIX DESIGN

602.1 Scope. Concrete mix design for pavement shall conform to the Concrete Section of the *Missouri Standard Specifications for Highway Construction,* latest edition; except as modified or amended by these Specifications. No fly ash shall be allowed unless approved by the Engineer. Other mix designs may be approved by the Engineer.

A. Concrete Mix. 28 day Design Strength shall be 4,000 psi. Mix shall contain a minimum of 6.35 bag cement. Mix shall obtain a maximum of three inch slump.

Materials	Units
Cement	597 cu.yds.lbs
Course Aggregate (Rock)	1,879 cu.yds.lbs
Fine Aggregate (Sand)	1,128 cu.yds.lbs
Water	31.8 gallons
Air Entrainment	6% +/- 1.5% by volume

B. High Early Concrete Mix. Design Strength shall be 3,000 psi within three days. Mix shall contain a minimum of 8.62 bag cement. Mix shall obtain a maximum of three inch slump.

Materials	Units
Cement	810 cu.yds.lbs
Course Aggregate (Rock)	1,714 cu.yds.lbs
Fine Aggregate (Sand)	1,052 cu.yds.lbs
Water	34.5gallons
Air Entrainment	6% +/- 1.5% by volume

SECTION 603 – BATCHING

603.1 Mixing. Concrete for pavement shall be mixed according to the Concrete Section of the *Missouri Standard Specifications for Highway Construction,* latest edition; except as modified or amended by these Specifications.

603.2 Retempering. Retempering of mortar or concrete that has partially hardened; that is, remixing with or without additional materials or water, shall not be permitted.

603.3 Delivery Tickets. In addition to the requirements of the Concrete Section of the *Missouri Standard Specifications for Highway Construction,* latest edition, each delivery ticket supplied by the concrete manufacturer shall show the weights and/or volumes of the ingredients in the load.

SECTION 604 – CONSTRUCTION REQUIREMENTS

604.1 Scope. This Section covers construction of Portland Cement Concrete Pavement (PCCP) of the thickness and width shown on the Plans. These Specifications include materials, construction requirements, and other appurtenant work. See Standard Drawings for additional information.

604.2 Weather Conditions. Concrete shall not be placed on frozen subgrade or when the air temperature is below 40 degrees Fahrenheit. The Contractor may be allowed to start placing concrete when the air temperature is 35 degrees Fahrenheit if the temperature is predicted to be above 40 degrees Fahrenheit provided hot water is used. The temperature of the concrete shall not be less than 50 degrees Fahrenheit nor more than 100 degrees Fahrenheit at the time of placement. The Contractor shall protect the concrete from freezing anytime the air temperature may be expected to reach freezing (32 degrees

Fahrenheit) during the day or night. Such protection shall be maintained for at least 5 days. The Contractor shall also protect the concrete from damage due to rain. Failure to property protect unhardened concrete may constitute cause for the removal and replacement of defecting concrete at the Contractor's expense. The cost of providing heated concrete and its protection shall be at the Contractor's expense.

604.3 Surface Preparation. The area to receive pavement shall be prepared according to Sections 303, 306, and 403 of these Specifications. Paving work shall not begin until deficient base course areas have been corrected to the satisfaction of the Engineer and are ready to receive paving.

604.4 Forms. Prior to start of paving, forms shall be in place to accommodate at least one day of paving. The form height shall equal the pavement thickness shown on the Plans. Where combined curb and gutter exists or are constructed as part of the improvement these shall be used as the side forms for the concrete slab. Where there are no gutters, the line and grade of the slab shall be governed by a line of forms set along each side of the pavement. Where a longitudinal construction joint is required, an additional form will be necessary. Forms shall be rigidly staked to the exact line and grade to provide an accurate track for the screed. Steel forms are preferred. If wooden forms are used, they shall not be less than two inch stock and shall be straight and free from warp. All forms shall be cleaned and oiled before being used. The forms shall be left in place until the concrete is adequately dry.

If a slipform machine is used, the concrete slump shall be adjusted to meet the type of work being performed.

604.5 Placing Concrete. Prior to placing the concrete, the subgrade and aggregate base course shall be prepared as described in Sections 306 and 403 of these Specifications. Concrete trucks will not be allowed to drive on a subbase prepared for a pour, unless otherwise approved by the Engineer.

The concrete shall be deposited upon the moistened aggregate base course to the required depth and for the entire width between forms in such a manner to prevent segregation and to minimize handling. Concrete shall be placed in successive batches and in a continuous operation without the use of intermediate forms or bulkheads between expansion joints.

Where the grade is greater than 6%, the concrete shall be placed and finished proceeding uphill unless written approval for an alternate procedure is obtained from the Engineer.

604.6 Manhole and Valve Guard Adjustments. When it is necessary to adjust a manhole or valve guard to match the grade of the improved street, the Contractor shall use appropriate adjusting ring for the field condition, as shown in the APL.

604.7 Contraction Joints. Contraction joints are necessary to control natural cracking from stresses caused by concrete shrinkage, thermal contraction, and moisture or thermal gradients within the concrete. All joints in the pavement not made by forms, or tools shall be sawed. Such joints shall be cut by means of an approved concrete saw to the depth and width as shown on the Standard Drawings. The saw shall be equipped with a suitable guide, properly adjusted so there will be no side sway, and the joint shall be cut in a straight line. During the sawing, the blade shall be used in accordance with the manufacturer's recommendations.

Sawing of the joints shall begin as soon as the concrete has hardened sufficiently to permit sawing without excessive raveling, usually four to twenty-four hours. All joints shall be sawed before uncontrolled shrinkage cracking takes place. The sawing of any joint shall be omitted if a crack occurs at or near the joint location prior to the time of sawing. Sawing shall be discontinued when a crack develops ahead of the saw. Following the sawing, the joints shall be thoroughly cleaned and sealed with

specified filler.

Transverse joints shall be at fifteen foot intervals maximum measured along the centerline. Longitudinal joints shall have a maximum spacing of 14 feet. Contraction joints may be skewed with the centerline, upon approval of the Engineer. Maximum skew shall be five feet for thirty feet of joint length. Skew shall be in direction of traffic flow.

Tie bars shall be supported in the proper position by chairs driven into the aggregate base, or may be placed by approved methods prior to the consolidation of the concrete. Tie bars shall be free from dirt, oil, paint and grease. Tie bars required at longitudinal construction joints shall be positioned before concrete base or pavement consolidation.

604.8 Construction Joints. Construction joints shall be reinforced as shown on the Standard Drawings. Transverse construction joints are necessary at the end of a paving segment or at a placement interruption for a driveway, cross road or bridge, as shown on the Standard Drawings. Longitudinal construction joints join lanes that are paved at different times, or join through-lanes to curb and gutter or auxiliary lanes. No keyed joints shall be allowed.

604.9 Isolation Joint. Isolation joints separate the pavement from objects or structures, and allow independent movement of the pavement, object or structure without any connection that could cause damage. Isolation joints are used where a pavement abuts certain manholes, drainage fixtures, sidewalks and buildings, and intersects other pavements or bridges. Isolation joints shall be constructed at the locations and according to the details shown on the Standard Drawings.

604.10 Concrete Curb and Gutter. Concrete curb and gutter shall be constructed in accordance with the Plans. See the Standard Drawings for details. Joints in concrete curb and gutter shall be a continuation of the joints in the adjacent PCCP. When constructed adjacent to flexible pavement, transverse joints in concrete curb and gutter shall be constructed to the details shown in the Plans. Saw cut contraction joints for curb and gutter sections at 15 foot intervals or as directed by the Engineer. Provide ½ inch preformed expansion joints at 75 foot intervals and at ends of curb returns and all radius points.

604.11 Finishing. Machine finishing by extrusion methods or by vibrating and screeding processes shall be required for all concrete. After the final course of the concrete has been placed, the concrete shall be struck-off and thoroughly vibrated until concrete of a uniform and satisfactory density is attained. The surface of the pavement shall be of uniform texture and to the proper grade and typical section.

Vibrating tubes shall extend into the concrete the distance necessary to provide adequate consolidation. Vibrators shall be operated only when the machine to which the vibrators are attached is moving. Care shall be taken that the vibrator does not penetrate the aggregate base or dislodge or move the joints. Vibrators shall not come in contact with the reinforcement, load transfer devices, aggregate base or side forms. Vibrators are to be used for consolidation; they shall not be used to move concrete.

Moisture in any form shall not be applied to the surface of the concrete except for emergency conditions. When emergency conditions exist and it becomes necessary to apply additional moisture to the surface of the concrete in order to complete the final finishing operation, water may only be applied in the form of a fine pressure spray. Under such conditions, placement of additional concrete on the aggregate base shall be discontinued until the emergency conditions cease.

Compacting, vibrating and finishing concrete by hand methods will be permitted for the following:

A. For all curves having a form line radius of less than 200 feet or where wood forms are used.
B. For all irregularly shaped areas.
C. For pavement lanes less than 200 feet long.

D. For pavement lanes less than 10 feet wide.
E. For bridge approaches and pavement to first expansion joint.
F. When a breakdown of the mechanical compacting and finishing equipment occurs or in the event of some other emergency. After a breakdown, only material which has already been proportioned and which may be rendered unsatisfactory for use may be finished by hand.
G. For all Portland Cement Concrete base, pavement next to the forms shall be smoothed with a trowel and the edges of the pavement rounded with a suitable edging tool of approximately 3/8 inch. A well-defined and continuous radius having a smooth dense finish shall be produced.

For curbs, retaining walls, junction boxes, headwalls, wingwalls, endwalls, and other exposed vertical concrete surfaces, the concrete shall be rubbed to have a smooth and uniform appearance after the forms have been removed.

604.12 Curing. Immediately after the finishing operations have been completed, the concrete surface shall be treated by one of the following methods. After the pavement forms are removed, the edges of the slab must also be cured.

A. **Liquid Curing Compound.** Material shall be ASTM C309 Standard Specification for White Pigmentized Liquid Membrane-Forming Compounds for Curing Concrete. Where liquid curing compound is used it shall be placed after the concrete has been finished and the free water has left the surface. The entire area of the pavement surface shall be sealed by spraying a uniform application of the curing solution.

The Contractor shall provide satisfactory equipment and means to properly control and assure the direct application of the curing solution on the pavement surface so as to result in a uniform coverage on the pavement at the rate of one gallon for each 150 square feet of area.

If rain falls on the newly coated pavement before the film has dried sufficiently to resist damage, or if the film is damaged in any other way, the Contractor shall apply additional curing material at the Contractor's expense. All areas cut by finishing tools subsequent to the application of the curing solution shall immediately be given new applications at the rate specified above.

If hairline cracking develops before the membrane can be applied, the concrete shall be initially cured with wet burlap before the membrane is placed.

B. **Burlap.** The top surface of the concrete shall be temporarily covered with thoroughly damp burlap after the concrete has set sufficiently to prevent marring of the surface. Burlap shall be handled in such a manner that contact with earth or other deleterious substances is avoided. All burlap, except burlap previously used for curing concrete, shall be thoroughly washed. The burlap shall be kept thoroughly wet until removed for application of the final curing material. Neither the top nor the edge of the concrete shall be left unprotected for more than thirty minutes. When the burlap is removed, liquid curing compound shall be applied as described above.

604.13 Removing Forms. Forms shall be removed carefully to avoid damage to the concrete base or pavement. Honeycombed areas not rejected shall be immediately repaired. If the forms are removed less than seventy-two hours after placing concrete, the sides of the concrete shall be cured by one of the methods specified above. Any trench excavated beside the forms shall be entirely backfilled so water will not stand next to the concrete base or pavement.

604.14 Sealing Joints. All sawed contraction joints and sawed or formed expansion joints shall be sealed with joint sealing material before the pavement is opened to any traffic. Immediately prior to sealing joints, joints shall be thoroughly cleaned and dried. The sealing material shall be heated and applied per the manufacturers recommendations. If manufacturer's recommendations are not followed, material will be

rejected. The material shall fill the joint openings uniformly from the bottom to 1/2 inch from the top. Excess joint material shall be removed from the pavement surface.

604.15 Surface Smoothness. After surface irregularities have been removed the surface shall be given a broom finish. Brooms shall be drawn across the surface from centerline to side with broom perpendicular to surface overlapping previous stroke. Brooming shall be done so that corrugations will be uniform but not over 1/16 inch in depth. All brooming shall meet the approval of the Engineer.

A. Longitudinal Straightedging. Pavement shall be measured with a 10 foot straightedge. The straightedge path in the longitudinal direction for driving lanes will be located three feet from the outside edge. Additional paths with suspect roughness may be selected at the Engineer's discretion. Any variations in the longitudinal direction exceeding ¼ inch in ten feet on local streets and ⅛ inch in ten feet on collector and arterial streets shall be marked for correction in a manner approved by the Engineer and at the Contractor's expense.

B. Transverse Straightedging. The Engineer shall randomly check driving lanes for variations in the transverse direction with a 4 foot straight edge. Any variations in the transverse direction more than a ¼ inch shall be marked for correction in a manner approved by the Engineer and at the Contractor's expense.

604.16 Opening to Traffic. Concrete pavement shall not be opened to traffic or to the Contractor's equipment until the concrete has obtained a minimum compressive strength of 3,500 pounds per square inch, or such length of time as may be specified or directed by the Engineer.

The Contractor shall maintain adequate barricades and protection of the pavement to prevent traffic from using the pavement until appropriate strength is achieved. The barricades used shall be standard devices per the MUTCD and of such size and weight that they are not readily movable by hand, and must be visible at night. Pavement shall be cleaned prior to opening to traffic.

SECTION 605 – PAYMENT

605.1 Portland Cement Concrete Pavement (PCCP). Payment for PCCP shall be made at the contract unit price and shall include the cost of all materials, labor, equipment, installation, relocation, and maintenance, and all else necessary to provide a complete and functional project as outlined on the Plans and specified in these Specifications. If curb and gutter is integral, the price shall be included with PCCP. If no pay item for PCCP is included in the contract, it shall be considered incidental to the work and no direct payment will be made.

605.2 Manhole and Valve Guard Adjustments. Payment for Manhole and Valve Guard Adjustments shall be made at the contract unit price and shall include the cost of all materials, labor, equipment, installation, relocation, and maintenance, and all else necessary to provide a complete and functional project as outlined on the Plans and specified in these Specifications. If no pay item for Manhole and Valve Guard Adjustments is included in the contract, it shall be considered incidental to the work and no direct payment will be made.

605.3 Concrete Curb and Gutter. Payment for Curb and Gutter shall be made at the contract unit price and shall include the cost of all materials, labor, equipment, installation, relocation, and maintenance, and all else necessary to provide a complete and functional project as outlined on the Plans and specified in these Specifications. All curb shall be measured along the flow line. If no pay item for Curb and Gutter is included in the contract, it shall be considered incidental to the work and no direct payment will be made.

DIVISION 700 – PAVEMENT REPAIR

SECTION 701 – MATERIALS

701.1 Scope. The work shall consist of furnishing all labor, materials, and equipment for complete pavement repair for Asphaltic Concrete Pavement or Portland Cement Concrete (PCCP). Pavement repair shall be constructed in conformance with the lines and grades shown on the Plans or as established by the Engineer and as specified herein. Item of work or materials not specifically mentioned, but necessary for the completion of pavement repair shall be considered as incidental to other items in the contract.

701.2 Earthwork. Shall conform to Division 300 of these Specifications.

701.3 Asphaltic Concrete Pavement. Shall conform to Division 500 of these Specifications.

701.4 Portland Cement Concrete Pavement. Shall conform to Division 600 of these Specifications.

SECTION 702 – ASPHALT PAVEMENT REPAIR

702.1 Scope. Flexible Pavement Repair shall be constructed according to the Standard Drawings and in conformance with the lines and grades shown on the Plans.

702.2 Cut Requirements. Flexible Pavement shall be cut a minimum of three feet outside each side of the trench excavation area, as shown on the Standard Drawings. Area shall be cut with a saw, perpendicular to the cross sectional area. The cut shall be a minimum of ten inches in depth. Removal of foreign materials and defective areas shall meet the approval of the Engineer. No angle cuts shall be allowed. Steel Plate Bridging may be authorized as stated in Section 305 of these Specifications.

702.3 Fill Requirements. Backfill trench as specified in Trench Backfill Section 305 of these Specifications up to the subgrade elevation. Top backfill with a minimum of eight inches of compacted Type 5 Aggregate Base as specified in Section 403. Lay new Asphalt Pavement to match existing thickness plus one inch or a minimum of four inches as specified in Division 500 of these Specifications. A minimum of two lifts shall be used. The first lift may be BP-2 or BP-1. The top lift shall be BP-2. Compaction of flexible pavement shall meet density requirements as stated in Division 500 of these Specifications.

If hot mix is not available due to weather limitations, cold patch may be accepted on a temporary basis. It is the permit holder's responsibility to maintain the cold patch until it is replaced. As soon as the appropriate mix is available, the cold patch shall be removed and the appropriate Bituminous Surface Course shall be placed.

702.4 Inspection. All Asphalt Pavement Repairs shall be inspected and approved by the Engineer.

SECTION 703 – PORTLAND CEMENT CONCRETE PAVEMENT REPAIR

703.1 Scope. Portland Cement Concrete Pavement (PCCP) Repair shall be constructed according to the Standard Drawings to match surrounding pavement grades or per the lines and grades shown on the Plans.

703.2 Cut Requirements. Portland Cement Concrete Pavement shall be cut a minimum of three feet outside of the trench excavation on all sides of the excavation. If this cut is within two feet of a joint, replacement shall be taken to the joint. Area shall be cut with a saw, perpendicular to the cross sectional

area. The cut shall be a minimum of ten inches in depth. Removal of foreign materials and defective areas shall meet the approval of the Engineer. No angle cuts shall be allowed. Steel Plate Bridging may be authorized as stated in Section 305 of these Specifications.

703.3 Fill Requirements. Backfill trench as specified in Trench Backfill Section 305 of these Specifications up to the subgrade elevation. Top backfill with a minimum of four inches of compacted Type 5 Aggregate Base as specified in Section 403. Lay new PCCP to match existing thickness plus one inch or a minimum of seven inches as specified in Division 600 of these Specifications. Concrete shall be doweled into existing pavement as shown on the Standard Drawings.

703.4 Inspection. All Portland Cement Concrete Pavement Repairs shall be inspected and approved by City personnel.

SECTION 704 – PAYMENT

704.1 Flexible Pavement Repair. Payment for Flexible Pavement Repair shall be made at the contract unit price and shall include the cost of all materials, labor, equipment, installation, relocation, and maintenance, and all else necessary to provide a complete and functional project as outlined on the Plans and specified in these Specifications. If no pay item for Flexible Pavement Repair is included in the contract, it shall be considered incidental to the work and no direct payment will be made.

704.2 Portland Cement Concrete Pavement (PCCP) Repair. Payment for PCCP Repair shall be made at the contract unit price and shall include the cost of all materials, labor, equipment, installation, relocation, and maintenance, and all else necessary to provide a complete and functional project as outlined on the Plans and specified in these Specifications. If no pay item for PCCP Repair is included in the contract, it shall be considered incidental to the work and no direct payment will be made.

DIVISION 800 – DRIVEWAYS AND SIDEWALKS

SECTION 801 – DRIVEWAYS

801.1 Scope. This section covers construction of driveways of the thickness and width shown on the Plans. Specifications include all materials, construction requirements, and other appurtenant work. Driveways shall be constructed according to the material type, line, grade, and dimensions shown on the Plans, or as directed by the Engineer.

801.2 Driveway Design. All Driveways shall be concrete and shall be constructed in accordance with the Standard Drawings. The minimum thickness of a driveway on Rights-of-Way shall be six inches. The driveway shall have a maximum cross slope of 2% or less.

All driveways shall include a sidewalk crossing whether or not a sidewalk connection is made. The crossing surface shall be constructed in accordance with the applicable ADA and PROWAG requirements

801.3 Materials. All materials used in the construction of driveways within the Rights-of-Way shall be the same as for concrete streets conforming to Division 600 of these Specifications.

801.4 Driveway Joints.

A. **Location of contraction joints** shall be provided by the Contractor and subject to the Engineer's approval.

B. **Isolation joints** of three-quarter (¾) inch preformed fiber expansion joint filler, as stated in Section 601.14 of these Specifications, full depth, shall be provided between the driveway slab and street, and also at the Right-of-Way line as shown on the Standard Drawings.

Street Creep may occur with thermal expansion and contraction of concrete pavements. Concrete expands and contracts due to temperature changes and other influences. Homes located at the end of "T" intersections, at the end of cul-de-sacs, and on the outside of a curve are generally more susceptible to street creep. In areas prone to street creep, driveways are required to have a four inch isolation joint at the back of curb, a one inch isolation joint at the back of sidewalk or near the Right-of-Way line, and a two inch isolation joint adjacent to the garage floor. It is the Developer's or property owner's responsibility to ensure proper isolation joints have been installed.

SECTION 802 – CONCRETE SIDEWALKS

802.1 Scope. This section covers construction of sidewalks of the thickness and width shown on the Plans. These Specifications include all materials, construction requirements, and other appurtenant work. All sidewalks shall be concrete and shall be constructed to the line, grade and dimensions shown on Plans, or as directed by the Engineer.

802.2 Sidewalk Design. Minimum widths of new sidewalks shall be as shown on the Standard Drawings. Aggregate base for sidewalks shall be a minimum of four inches thick and shall extend six inches on both sides of the sidewalk. The minimum thickness of a sidewalk shall be four inches. Where the sidewalk is used as a part of a driveway and at street corners, it shall be a minimum thickness of six inches. The maximum cross slope of a sidewalk shall be 2%. Sidewalks shall be constructed in accordance with applicable ADA and PROWAG requirements.

Where replacing an existing sidewalk, the Contractor shall construct the new sidewalk to the width, grade, and line of the old sidewalk, or as otherwise directed by the Engineer. Where excavation through

an existing sidewalk is necessary, the Contractor shall remove and replace to the nearest joint.

802.3 Materials. All materials used in the construction of concrete sidewalks shall conform to Division 600 of these Specifications. There shall be no sidewalks constructed of asphaltic concrete pavement.

802.4 ADA Curb Ramps and Detectable Warning Surfaces. Ramps shall be constructed at locations shown on the Plans. All ramps shall conform to the requirements of ADA and PROWAG. The maximum slope of all ramps shall be 8.33%. The surface texture of the entire ramp area (ramp, flares, landing) shall be a medium coarse broomed finish.

The detectable warning surfaces shall be the color red as approved by the Engineer. Installation of the detectable warning surfaces shall conform to the manufacturer's recommendations. See APL for product information.

802.5 Compliance. Sidewalks, ADA Curb Ramps, and Detectable Warning Surfaces shall be checked against the latest edition of the Missouri Department of Transportation ADA Checklist for compliance with PROWAG.

802.6 Sidewalk Joints.

A. **Contraction joints** shall be cut ¾ inch in depth, with a suitable tooling device, and on five foot intervals for the full width of the sidewalk. Sawing of the joints will be permitted as an alternate. All joints shall be vertical and straight.

B. **Isolation joints** of ½ inch preformed fiber joint filler shall be provided every fifty feet and shall be used between the sidewalk and curbing and around other obstructions, unless otherwise shown on the Plans. The joint filler shall be sealed. See APL for approved sealers.

SECTION 803 – PAYMENT

803.1 Concrete Driveway. Payment for Concrete Driveway shall be made at the contract unit price and shall include the cost of all materials, labor, equipment, installation, relocation, and maintenance, and all else necessary to provide a complete and functional project as outlined on the Plans and specified in these Specifications. If no pay item for Concrete Driveway is included in the contract, it shall be considered incidental to the work and no direct payment will be made.

803.2 Concrete Sidewalk. Payment for Concrete Sidewalk shall be made at the contract unit price and shall include the cost of all materials, labor, equipment, installation, relocation, and maintenance, and all else necessary to provide a complete and functional project as outlined on the Plans and specified in these Specifications. Sidewalk transitions for ADA Curb Ramps with Detectable Warning Surfaces shall be paid as sidewalk. If no pay item for Concrete Sidewalk is included in the contract, it shall be considered incidental to the work and no direct payment will be made.

803.3 ADA Curb Ramp with Detectable Warning Surface: Payment for ADA Curb Ramps with Detectable Warning Surfaces shall be made at the contract unit price and shall include cost of all materials, labor, equipment, installation, relocation, adjustments and maintenance, and all else necessary to provide a complete and functional project as outlined on the Plans and specified in these Specifications. Pay limits for ADA Curb Ramps shall be the ramp, landing, flares, street curb and gutter replacement across the width of the ramp plus three feet each side of the flare or curb limit, sidewalk curbs where necessary, and detectable warning surfaces. All demolition, surface utility work, and street filler are considered incidental to the ADA Curb Ramp with Detectable Warning Surface unit price. If no pay item for ADA Curb Ramp with Detectable Warning Surface is included in the contract, it shall be considered incidental to the work and no direct payment will be made.

DIVISION 900 – MISCELLANEOUS STREET CONSTRUCTION

SECTION 901 – TEMPORARY TRAFFIC CONTROL

901.1 Scope. This section governs furnishing all equipment, materials and incidental parts as required to complete the Temporary Traffic Control as shown in the Plans.

901.2 Submittals. The Contractor shall submit a temporary traffic control plan and schedule to the Engineer prior to beginning work. See Section 104.9 of these Specifications for submittal procedures and requirements. The Temporary Traffic Control Plan shall include construction sequencing and phasing of vehicle lane closures, sidewalks, and bike lanes. The Contractor shall maintain all vehicular and pedestrian traffic control devices and operations throughout the project at his expense. Prior to starting a construction phase, the Contractor shall secure approval from the Engineer for the proposed plan for operation, sequence of work, and methods of providing for the safe passage of traffic. If the City provides a temporary traffic control plan to the Contractor as part of the Contract Documents, any changes or deviations from the plan shall be approved by the Engineer.

901.3 Standard. The Contractor shall provide adequate temporary traffic control devices, such as, temporary concrete barriers, temporary striping, portable barriers, signs, changeable message boards, drums and cones, etc., in accordance with the Manual on Uniform Traffic Control Devices (MUTCD), latest edition. Devices shall also meet MoDOT's Quality Standard for Temporary Traffic Control Devices.

901.4 Flagger Control. It is the flagger's responsibility to assess the safety and efficiency of traffic operations within the temporary traffic control zone and manage the movement of traffic through the proper assignment of Right-of-Way and/or by controlling speed. Each flagger shall maintain a valid flagger certification card that certifies the individual has been trained in the principal of flagging in accordance with the latest edition of MUTCD. Certifications will not be required in emergency situations that arise due to actions beyond the Contractor's control when flagging is necessary to maintain safe traffic control on a temporary basis. All flagging operations shall be in accordance with the latest edition of MUTCD.

901.5 Coordination and Scheduling. Street closure shall be limited to one lane closure at a time, unless otherwise approved by the Engineer. Parallel streets adjacent to each other shall not be worked on simultaneously unless approved by the Engineer. Provision for local traffic shall be made by the Contractor, at his expense at all times during construction.

901.6 Notice. All residents along an affected route shall be notified prior to the construction. Temporary access to driveways shall be provided. Contractor shall keep the Engineer informed of any changes regarding scheduling. Notice of lane closures shall be submitted at least three full City business days in advance to the Engineer, in order to allow appropriate amount of time for a press release. Contractor is responsible for contacting local police, fire, hospitals, ambulance service, and schools as appropriate of any lane closures.

901.7 Execution. The safety of the public and the convenience of vehicle traffic and pedestrians shall be regarded as primary importance at all times during construction. It shall be the entire responsibility of the Contractor to provide for traffic along and across public roads as well as for ingress and egress to all private property. The Contractor shall plan and execute his operations in a manner that will cause minimum interference with traffic.

SECTION 902 – TRAFFIC SIGNALS

902.1 Scope. This section governs furnishing all equipment, materials and incidental parts as required to complete the Traffic Signal Installation as shown on the Plans. Unless otherwise noted on the Plans, all equipment, materials and incidental parts shall be new. All incidental parts which are needed to properly install the system, but not shown on the Plans or described in these Specifications, shall be furnished, the cost of which shall be included in the traffic signal installations contract price.

The traffic signal installation shall be complete, and the Contractor shall furnish and install all equipment necessary for the satisfactory operation of all electrical apparatus and for the complete operation of the traffic signal installation whether specifically mentioned or not.

902.2 Materials. All materials, including but not limited to concrete, reinforcing steel, hardware, etc., shall conform to the *Missouri Standard Specifications for Highway Construction,* latest edition.

902.3 Products. All products shall conform to the *Missouri Standard Specifications for Highway Construction,* latest edition and the City of Cape Girardeau's Approved Product List.

902.4 Signal Heads. Shall conform to the *Missouri Standard Specifications for Highway Construction,* latest edition; with the exception that only polycarbonate signal heads shall be used, and all signal indications in conventional signal heads shall be illuminated with LED modules.

902.5 Signs. All permanent traffic signing and traffic control signing shall conform to the requirements of the Manual on Uniform Traffic Control Devices (MUTCD), latest edition. All signs shall meet the requirements of Section 904 of these Specifications.

902.6 Post and Mast Arms. Shall conform to the *Missouri Standard Specifications for Highway Construction,* latest edition.

902.7 Span Wire Assemblies. No span wire assemblies shall be allowed unless authorized by the Engineer.

902.8 Power Supply Assemblies. Shall conform to the *Missouri Standard Specifications for Highway Construction,* latest edition.

902.9 Luminaire Control. Shall conform to the *Missouri Standard Specifications for Highway Construction,* latest edition.

902.10 Traffic Controller Assemblies. Shall be as listed on the APL and conform to the *Missouri Standard Specifications for Highway Construction,* latest edition.

902.11 Interconnect Type. The interconnect type shall be shown on the Plans and conform to the *Missouri Standard Specifications for Highway Construction,* latest edition. When determined by the Engineer, the traffic signal shall be connected to City owned fiber optics using an eight port switch. See APL for approved switches.

902.12 Detectors. Wide dynamic video detectors shall be used, and shall conform to the *Missouri Standard Specifications for Highway Construction,* latest edition. See APL for approved detectors.

902.13 Pedestrian Signals. Shall Shall conform to the *Missouri Standard Specifications for Highway Construction,* latest edition.

902.14 Pull and Junction Boxes. Shall conform to the *Missouri Standard Specifications for Highway Construction,* latest edition.

902.15 Bases. Shall conform to the *Missouri Standard Specifications for Highway Construction,* latest edition.

902.16 Conduit Systems. Shall conform to the *Missouri Standard Specifications for Highway Construction,* latest edition; with the exception that only polyvinyl chloride (PVC) schedule 40 or high-density polyethylene (HDPE) conduit shall be used.

902.17 Signal Faces. Shall conform to the *Missouri Standard Specifications for Highway Construction,* latest edition.

902.18 Post Erection. Shall conform to the *Missouri Standard Specifications for Highway Construction,* latest edition.

902.19 Wiring. Shall conform to the *Missouri Standard Specifications for Highway Construction,* latest edition.

902.20 Test Equipment. Shall conform to the *Missouri Standard Specifications for Highway Construction,* latest edition.

902.21 Test Period. Shall conform to the *Missouri Standard Specifications for Highway Construction,* latest edition.

902.22 Turn-On. The signal turn-on shall be supervised by the Engineer and City of Cape Girardeau Public Works personnel. The Contractor shall be present for signal turn-on and be prepared to respond to any technical difficulties that may be encountered due to construction of the traffic signal installation or defective equipment supplied for the traffic signal installation. The signal turn-on shall not be done on Fridays, Saturdays, Sundays, or Holidays and shall be completed between the hours of 9:00 a.m. and 2:00 p.m., unless otherwise noted in the Plans or directed by the Engineer.

902.23 Maintenance Information. Shall conform to the *Missouri Standard Specifications for Highway Construction,* latest edition.

902.24 Final Clean Up. Shall conform to the *Missouri Standard Specifications for Highway Construction,* latest edition.

902.25 Uninterruptible Power Supply:

A. **Quality Assurance.** Where not specified otherwise, Work shall conform to the *Missouri Standard Specifications for Highway Construction,* latest edition.

B. **Uninterruptible Power Supply (UPS) – Operation.** The UPS shall be a line-interactive type and provide voltage regulation and power conditioning when using utility power. The UPS shall provide reliable emergency power to the traffic signals in event of a power failure or interruption. The transfer from utility power to battery power, and visa versa, shall not interfere with the normal operation of the traffic controller, conflict monitor or any other peripheral devices within the traffic controller assembly.

C. **Uninterruptible Power Supply (UPS).** See APL for approved products.

D. **Installation.** All aspects of installation shall be in full conformance with the manufacturer's recommendations. If any changes are required to the layout or operation of the existing equipment within a signal cabinet, the Contractor shall contact the Engineer before proceeding with the work to ensure that the changes will not significantly alter the operation of the existing equipment. When a

traffic signal is activated, the signal shall flash red in all directions to signify an all way stop for 24 hours, prior to placing the signal in normal operation cycles.

E. **Documentation.** A Quick Installation reference manual and an Operators manual shall be shipped with each unit. Both manuals shall be available in electronic format for download via the Internet or via email.

F. **Testing Phase.** The Engineer and City of Cape Girardeau Public Works personnel shall be present with the Contractor during the testing phase of the new UPS equipment.

G. **Warranty.** UPS Equipment shall have a minimum warranty of two years from the date of installation.

SECTION 903 – STREET LIGHTING

903.1 Scope. This section governs furnishing all equipment, materials and incidental parts as required to complete the Street Lighting as shown on the Plans. Unless otherwise noted in the Plans, all equipment, materials and incidental parts shall be new. All incidental parts which are needed to properly install the system, but not shown on the Plans or described in these Specifications, shall be furnished, the cost of which shall be included in the street lighting contract price.

The street lighting installation shall be complete, and the Contractor shall furnish and install all equipment necessary for the satisfactory operation of all electrical apparatus and for the complete operation of the streetlight installation whether specifically mentioned or not.

903.2 Materials. All lighting equipment including but not limited to luminaires, lamps and poles shall conform to the *Missouri Standard Specifications for Highway Construction,* latest edition. The streetlight pole shall be fiberglass, with a six foot minimum aluminum arm.

903.3 Standards. All electrical services, either above ground or underground, shall meet Ameren UE standards and requirements.

903.4 Location. Newly installed streetlight poles shall be located a minimum of two feet from the back of the curb and a maximum of four feet from the curb unless otherwise authorized by the Engineer. The maximum distance may be adjusted to avoid utilities or sidewalks, both existing and future, with prior approval from the Engineer.

903.5 Mounting Height. The mounting height shall be between twenty-five and thirty feet depending on the wattage of the fixture and shall extend over the pavement three to eight feet depending on the street width.

903.6 Bulb Type. Unless otherwise determined by the Engineer, 100-watt high-pressure sodium lights or equal lumen LED light no less than 50 watts shall be installed along non-major streets and 250-watt high-pressure sodium lights or equal lumen LED light no less than 135 watts shall be installed along major streets. See APL for approved LED manufacturers.

903.7 Spacing. The following spacing requirements are general guidelines. All spacing of street lighting shall be designed appropriately and indicated on the Plans.

A. **New Major Streets.** On newly constructed major streets, streetlight spacing shall be between 230 and 260 feet unless otherwise approved by the City.

B. **Reconstructed Major Streets.** On reconstructed streets, streetlight spacing shall be between 180 and 300 feet and should be coordinated with the street design so that the street will be adequately and efficiently lit.

C. **Additional Streetlights on Existing Major Streets.** New streetlights to be added on existing streets shall be spaced between 180 and 300 feet apart.

D. **Upgrading Existing Fixtures on Existing Major Streets.** Existing 100-watt fixtures (mercury vapor and high-pressure sodium) along existing major streets shall be upgraded to 250-watt high-pressure sodium fixtures. In cases where existing streetlights are less than 180 feet apart, the City may choose to remove excess streetlights at the time the upgrades are made.

E. **Streetlights at Intersections.** Installation of streetlights is preferred at the intersections of major streets and at intersections of residential streets within subdivisions. If a major street has adequately spaced linear lighting, intersections with minor streets may not require additional streetlights. However, it is recommended that streetlights be placed within one hundred feet from the centerline of the intersecting minor street.

F. **Streetlights in New Residential Areas.** The Developer shall be responsible for the proper location and design of proposed streetlight installation within a subdivision as outlined in the City ordinance for subdivisions and all applicable City policies and standards. Streetlights shall be located at all intersections, at the mid-block on blocks longer than 650 feet within the subdivision, at abrupt changes in street alignment or other unusual conditions and at the end of cul-de-sacs that are greater than 350 feet from the nearest existing light.

G. **Streetlights in Existing Residential Areas.** Streetlight installation is preferred at every residential street intersection, at mid-blocks on blocks that are longer than 650 feet, at abrupt change in street alignment or other unusual condition and on cul-de-sacs that are at least 350 feet from the nearest existing light. A new streetlight may not be recommended if the cost is prohibitive, if the adjoining property owner(s) refuse to grant an easement from a power source to the streetlight or for any other reason the City determines to be non-feasible.

903.8 Privately Installed Streetlights. Streetlights installed without prior approval by the City or not in accordance with City policy or standards shall not be accepted as improvements and shall not be the responsibility of the City to operate or maintain.

SECTION 904 – TRAFFIC SIGNAGE

904.1 Scope. This section governs furnishing all equipment, materials and incidental parts as required to complete the traffic signage as shown on the Plans. Unless otherwise noted in the Plans all equipment, materials and incidental parts shall be new. All incidental parts which are needed to properly install the system, but not shown on the Plans or described in these Specifications, shall be furnished, the cost of which shall be included in the Traffic Signage contract price.

904.2 Standard. All sign types, locations, and mounting requirements shall conform to the Manual on Uniform Traffic Control Devices (MUTCD), latest edition. All letters, numerals, arrows, symbols, borders, and other features of the sign message shall conform to "Standard Highway Signs" by the U.S. Department of Transportation - Federal Highway Administration.

904.3 Materials. All signing shall conform to the Highway Signing Section of the *Missouri Standard Specifications for Highway Construction,* latest edition.

A. **Signs.** Signing materials shall conform to *Missouri Standard Specifications for Highway Construction,* latest edition. Signs shall be reflectorized with Type 3 reflective sheeting according to the Highway Sign Material Section.

B. **Posts.** Sign posts shall be fourteen (14) gauge, two inch steel square tube and shall conform to the *Missouri Standard Specifications for Highway Construction,* latest edition.

C. **Hardware.** Bolts, nuts, and washers shall conform to the *Missouri Standard Specifications for Highway Construction,* latest edition. Galvanizing thickness shall not exceed six (6) mils, except for anchor bolts.

904.4 Location. Plans may show location of signs. Final location shall be approved by the Engineer.

SECTION 905 – PAVEMENT MARKING

905.1 Scope. This section includes furnishing and placing pavement marking for application on Asphalt or Portland Cement Concrete Pavements. Pavement marking type and size shall be indicated on the Plans. All pavement markings shall be in accordance with the latest edition of the Manual on Uniform Traffic Control Devices (MUTCD), latest edition. All pavement markings shall be uniform in appearance with crisp, well-defined edges and shall be uniform in width and thickness. Surface distribution of the beads, if required, shall be uniform.

905.2 Materials. All materials shall conform to the *Missouri Standard Specifications for Highway Construction,* latest edition and the City of Cape Girardeau's APL.

A. Paint. Paint shall be acrylic waterborne pavement marking paint, white or yellow in color, and shall conform to the *Missouri Standard Specifications for Highway Construction,* latest edition.

B. Glass Beads. Moisture resistant beads shall be Type I, unless otherwise specified, and shall conform to the *Missouri Standard Specifications for Highway Construction,* latest edition.

C. Preformed Pavement Marking Tape. No preformed pavement marking tape shall be allowed.

D. Extruded Thermoplastic. No extruded thermoplastic shall be allowed.

E. Epoxy Pavement Marking. Type B shall be used on only on asphalt surfaces and shall conform to the *Missouri Standard Specifications for Highway Construction,* latest edition.

F. Snowplowable Raised Pavement Markers. No Snowplowable Raised Pavement markers shall be allowed unless authorized by the Engineer.

G. Temporary Raised Pavement Markers. Temporary Raised Pavement Markers (RPM's) that have been approved for use by the Engineer shall conform to the *Missouri Standard Specifications for Highway Construction,* latest edition. Type 1 Temporary RPM's shall be used on asphalt pavements. Type 2 Temporary RPM's shall be used on Portland Cement Concrete Pavement.

H. Preformed Short Term Pavement Marking Tape. Preformed Short Term Pavement Marking Tape shall conform to the *Missouri Standard Specifications for Highway Construction,* latest edition.

905.3 Equipment. All equipment for application of pavement marking paint shall be of such design and maintained in such a condition to properly and evenly apply marking paint and drop-on beads. Paint shall be applied by motorized machine using spray guns designed and adjusted to apply paint at the required thickness and width, unless otherwise approved by the Engineer.

905.4 Surface Preparation. All pavement surface areas to be painted shall be clean and free of earth or materials, such as curing compound that might prevent adhesion of the paint to the pavement surface. Paint shall not be applied in damp conditions or if there is any evidence of surface moisture on the pavement. Application conditions at the time that the painting is done shall be in accordance with the manufacturer's instructions, including temperature and receiving surface moisture content.

905.5 Application Rates. Paint shall be applied at a wet film thickness of 15-17 mils. The Contractor shall provide a paint thickness gauge for use by the Engineer to verify wet film thickness.

905.6 Paint Application. Paint shall be machine applied using spray guns designed and adjusted to apply paint at the required thickness and width. If there is any evidence of gun clogging, splattering or uneven paint distribution, painting operations shall cease until equipment is restored to proper operation.

Painting of stop bars, arrows, words, and symbols may be applied by hand using paint spray equipment. Equipment shall be capable of applying paint evenly to the required thickness. Pre-cut templates shall

be used for arrows, words, and symbols.

905.7 Glass Bead Application. Drop-on glass beads shall be mechanically applied to the wet paint directly behind the paint spray guns. Glass beads shall be mechanically applied evenly at a minimum of eight pounds per gallon of paint. If the beads do not adhere to the cured paint, all marking operations shall cease until corrections are made. Glass beads may be applied by hand for stop bars, arrows, words, and symbols.

905.8 Protection. The Contractor shall protect freshly painted lines from traveling vehicles until the paint has dried sufficiently to prevent tracking of the paint.

905.9 Scheduling. On roadways open to traffic, permanent pavement marking shall be in place no later than five days after final paving operations. For surface treatments requiring more than five days of cure, pavement marking shall be placed in accordance with the manufacturer's recommendations and as directed by the Engineer. On roadways open to traffic, any pavement marking obliterated by milling, grinding or resurfacing operations shall be replaced with temporary pavement marking in accordance to these Specifications no later than the end of the same day, unless on the final surface, the permanent pavement marking material specified in the contract is placed by the end of the day. Pavement marking shall be replaced in the same configuration as the previously existing pavement marking unless otherwise shown on the Plans or directed by the Engineer. If the permanent pavement marking cannot be placed according to these Specifications and the road is to be opened to traffic with no permanent pavement marking in place, the Contractor shall, at the direction of the Engineer, place and maintain temporary pavement marking at the Contractor's expense. The Contractor shall remove the temporary pavement marking and place the permanent pavement marking according to these Specifications and as directed by the Engineer.

905.10 Bicycle Lanes and Shared Use Arrows. Bicycle Lanes and Shared Use Arrows (Sharrows) shall be striped according to the Plans. See Standard Drawings for symbols and additional details.

905.11 Temporary Traffic Control Plan. The Contractor shall submit a Temporary Traffic Control plan for this operation in accordance to the Section 104 of these Specifications. The Contractor shall provide and use appropriate temporary traffic control devices such as signs, flashing lights on vehicles, arrow and warning signs on vehicles and equipment, and any flagmen as may reasonably be required to do the work safely for both the Contractor's workers and equipment as well as the traveling public. Do not apply traffic and lane marking paint until layout and placement have been verified with the Engineer.

905.12 Temporary Pavement Marking.

A. **Temporary Raised Pavement Markers.** Temporary Raised Pavement Markers (RPM's) shall be of the colors shown on the Plans unless otherwise directed by the Engineer. Reflective faces shall be oriented to face traffic. Temporary RPM's shall be installed according to the manufacturer's recommendations and placed at approximately forty foot intervals. On resurfacing projects, temporary RPM's shall be removed on intermediate lifts of asphalt before additional lifts are laid above them. Temporary RPM's on final wearing surfaces shall be removed as directed by the Engineer. No direct pay will be given for Temporary Raised Pavement Markers.

B. **Preformed Short Term Pavement Marking Tape.** Preformed Short Term Pavement Marking Tape shall be of the colors shown on the Plans unless otherwise directed by the Engineer. Preformed Short Term Pavement Marking Tape shall be installed according to the manufacturer's recommendations. No direct pay will be given for Preformed Short Term Pavement Marking Tape.

905.13 Pavement Marking Removal. Removal of all pavement marking within the project limits shall be as shown on the Plans or as directed by the Engineer. Pavement marking shall be removed to the

satisfaction of the Engineer with minimal damage to the pavement. No more than 5% of the existing marking shall remain. Any excess damage or scarring of the pavement shall be repaired at the Contractor's expense.

905.14 Inspection. Permanent pavement marking will be inspected to meet all of these Specifications and tolerances. If the inspection discloses any permanent pavement marking that does not meet the acceptance requirements, the Contractor shall repair or replace such work to the satisfaction of the Engineer within thirty days of notification, at the Contractor's expense.

905.15 Submittals. The following items shall be submitted to the Engineer for approval prior to the commencement of pavement marking:

A. Manufacturer's paint certification for both white and yellow colors.
B. Manufacturer's paint application instructions.
C. A wet film thickness gauge.
D. Method of application, including equipment type and model.
E. Mixed paint formulation, including % weight of pigment, vehicle, viscosity, and drying time.

SECTION 906 – TRACER WIRE FOR FIBER OPTIC CABLE

906.1 Tracer Wire for Fiber Optic Cable. All fiber optic cable shall be installed with tracer wire. For open trench installation, the tracer wire shall be orange coated, 12 gauge AWG-THHN solid copper, insulation thickness 0.030", and be approved for direct bury purposes. For directional bore purposes, the tracer wire shall be orange coated, 12 gauge copper clad steel with HDPE, insulation thickness of 0.045", and be approved for direct bury purposes. In both cases, the wire shall be installed with as few splices as possible and be installed the entire length of the fiber optic cable. Splices shall utilize splice kits as approved on the APL with no bare wire exposed. Splices shall be sealed with silicone sealant, aqua seal, or equivalent, and covered with electrical tape. The two ends of the wire shall be knotted to prevent strain on the splice. Branch connections shall be made without cutting the main wire utilizing a connection clip and sealing the joint the same as the splices.

The wire shall be securely placed inside the fiber conduit to retain its position during backfill. A minimum of 5 feet of tracer wire shall be neatly coiled inside each pull box through which the fiber optic cable passes. Tracer wire in pull boxes shall be capped and not electrically bonded to any ground wires.

After construction is complete, a continuity test must be performed on the tracer wire. Any breaks in the circuit must be repaired by the Contractor.

SECTION 907 – PAYMENT

907.1 Temporary Traffic Control. Payment for Temporary Traffic Control shall be made at the contract unit price and shall include the cost of all materials, labor, equipment, installation, relocation, and maintenance, and all else necessary to provide a complete and functional project as outlined on the Plans and specified in these Specifications. If no pay item for Temporary Traffic Control is included in the contract, it shall be considered incidental to the work and no direct payment will be made.

907.2 Traffic Signal. Payment for Traffic Signals shall be made at the contract unit price and shall include the cost of all materials, labor, equipment, installation, relocation, and maintenance, and all else necessary to provide a complete and functional project as outlined on the Plans and specified in these Specifications. If no pay item for Traffic Signals is included in the contract, it shall be considered incidental to the work and no direct payment will be made.

907.3 Uninterruptible Power Supply. Payment for Uninterruptible Power Supply shall be made at the contract unit price and shall include the cost of all materials, labor, equipment, installation, relocation, and maintenance, and all else necessary to provide a complete and functional project as outlined on the Plans and specified in these Specifications. If no pay item for Uninterruptible Power Supply is included in the contract, it shall be considered incidental to the work and no direct payment will be made.

907.4 Street Lighting. Payment for Street Lighting shall be made at the contract unit price and shall include the cost of all materials, labor, equipment, installation, relocation, and maintenance, and all else necessary to provide a complete and functional project as outlined on the Plans and specified in these Specifications. If no pay item for Street Lighting is included in the contract, it shall be considered incidental to the work and no direct payment will be made.

907.5 Traffic Signage. Payment for Traffic Signage shall be made at the contract unit price and shall include the cost of all materials, labor, equipment, installation, relocation, and maintenance, and all else necessary to provide a complete and functional project as outlined on the Plans and specified in these Specifications. If no pay item for Traffic Signage is included in the contract, it shall be considered incidental to the work and no direct payment will be made.

907.6 Pavement Marking. Payment for Pavement Marking shall be made at the contract unit price and shall include the cost of all materials, labor, equipment, installation, relocation, and maintenance, and all else necessary to provide a complete and functional project as outlined on the Plans and specified in these Specifications. If no pay item for Pavement Marking is included in the contract, it shall be considered incidental to the work and no direct payment will be made.

907.7 Pavement Marking Removal. Payment for Pavement Marking Removal shall be made at the contract unit price and shall include the cost of all materials, labor, equipment, installation, relocation, and maintenance, and all else necessary to provide a complete and functional project as outlined on the Plans and specified in these Specifications. If no pay item for Pavement Marking Removal is included in the contract, it shall be considered incidental to the work and no direct payment will be made.

907.8 Tracer Wire for Fiber Optic Cable. There will be no direct payment for made for Tracer Wire for Fiber Optic Cable, it shall be considered incidental to the work.

DIVISION 1000 – STORM SEWERS

SECTION 1001 – STORM PIPES

1001.1 Scope. The work shall consist of furnishing all labor, materials, and equipment for the complete installation of storm sewer pipe, and appurtenances, in conformance with the lines and grades shown on the Plans or as established by the Engineer and as specified herein. Items of work or materials not specifically mentioned, but necessary for the completion of storm sewer line construction shall be considered as incidental to other items in the contract.

1001.2 Materials.

A. Reinforced Concrete Pipe. Reinforced Concrete Pipe shall conform to the *Missouri Standard Specifications for Highway Construction,* latest edition. The pipe shape, whether circular or elliptical, shall be indicated on the Plans. Pipe shall be a minimum of Class III Concrete. When reinforced concrete elliptical pipe is to be used, it shall conform to the *Missouri Standard Specifications for Highway Construction,* latest edition. Minimum pipe diameter for reinforced concrete pipe shall be 15 inches.

B. Concrete Pipe Joints. Joints for concrete pipe shall have a maximum gap according to the table below, and may be of the following:

Pipe Size	Maximum Gap
≤ 36 inches	½ inch
> 36 inches ≤ 48 inches	¾ inch
> 48 inches	1 inch (inside gap)

1. **Rubber gasket.** Shall be of the proper size, Type A, and shall conform to the *Missouri Standard Specifications for Highway Construction,* latest edition.
2. **Plastic Joint Compound.** This compound shall be a homogenous blend of bituminous or butyl rubber material, inert filler, and suitable solvents or plasticizing compounds thoroughly mixed at the factory to a uniform consistency. The Plastic Joint Compound shall conform to ASTM C990.

C. High Density Polypropylene. High Density Polypropylene (HDPP) pipe shall be smooth interior and annular exterior corrugations. Minimum pipe size shall be 15 inches and maximum pipe size shall be 18 inches. HDPP shall conform to ASTM F2736/F2881, have air tight joints, and not be installed under any street. A minimum of two feet of cover over the top of the HDPP pipe is required or per manufacturer's recommendations. HDPP shall be installed per manufacturer's recommendations. Concrete flared end sections shall be installed at all open pipe ends. No HDPP flared end sections will be allowed.

D. Miscellaneous Materials. Any materials requested for use by the Contractor during construction but not described in this specification will be subject to approval by the Engineer.

1001.3 Construction Methods. Refer to Section 305 and Division 700 of these Specifications.

SECTION 1002 – JUNCTION BOXES, AREA INLETS, AND CURB INLETS

1002.1 Scope. The work shall consist of furnishing all labor, materials, and equipment necessary to perform all operations in connection with the construction of junction boxes, area inlets, and curb inlets required for the project in accordance with these Specifications and Plans. Items not specifically mentioned, but necessary for completion of the work shall be considered as incidental to other items in the contract. All inlets shall have the language "Do Not Dump, Drains to River" or similar language located on a plaque on the lid. See the APL for approved plaques.

1002.2 Materials.

A. Concrete. All concrete used within this Section shall be meet the same mix design as stated in Section 602 of these Specifications and shall conform to the *Missouri Standard Specifications for Highway Construction,* latest edition, unless otherwise approved by the Engineer.

B. Reinforcing steel. Shall conform to the *Missouri Standard Specifications for Highway Construction,* latest edition.

C. Preformed Fiber Expansion Joint Filler. Shall conform to the Cement of the *Missouri Standard Specifications for Highway Construction,* latest edition.

D. Precast units. May be substituted provided they meet plan intent and shall conform to *Missouri Standard Specifications for Highway Construction,* latest edition.

E. Bedding. See Section 305 of these Specifications.

F. Backfilling. See Section 305 of these Specifications.

1002.3 Construction Methods.

A. Forms. Forms shall be of wood, plywood, or any other suitable material, designed, constructed, braced, and maintained so that the finished concrete will be true to line and elevation and will conform to the required dimensions. They shall be designed to withstand the pressure of the concrete; the effect of vibration as the concrete is placed in all other loads incidental to the construction operations without distortion or displacement.

B. Inlet and Outlet Pipe. Pipe placed in the concrete for inlet or outlet connections shall extend through the concrete walls beyond the outside surfaces of the walls a sufficient distance to allow for connections.

C. Bedding. The subgrade for the drainage structure shall be excavated a sufficient depth so as to provide space for at least four inches of aggregate bedding material between the subgrade and the structure. Aggregate bedding material shall be placed and compacted to the proper elevation. See Section 305 of these Specifications. If rock is encountered within six inches of the bottom of the structure, excavate down a minimum of six inches and backfill with aggregate bedding material.

D. Reinforcement.

1. **Placement.** Reinforcing bars shall be accurately placed as shown on the Standard Drawings and shall be firmly and securely held in position by using concrete or metal chairs, spacers, metal hangers, supporting wires, and other approved devices of sufficient strength to resist crushing under full load.

   Placing bars in layers of fresh concrete as the work progresses and adjusting bars during the placing of concrete shall not be permitted. Before placing in the forms, all reinforcing steel shall be cleaned thoroughly of mortar, oil, dirt, loose mill scale, loose or thick rust, and coatings of any character that would destroy or reduce the bond. No concrete shall be deposited until the placing of the reinforcing steel has been inspected and approved.

2. **Splicing.** Splices of bars shall be made only where shown on the Standard Drawings or as approved by the Engineer. Where bars are spliced, they shall be lapped at least thirty diameters, unless otherwise shown on the Plans.

   Splicing shall be accomplished by placing the bars in contact with each other and wiring them together. Welding of reinforcing steel or cutting with a cutting torch will not be permitted unless specifically authorized by the Engineer.

3. **Bending Reinforcement.** Bars shall be bent or straightened in a manner which will not injure the material. Bars with kinks or unspecified bends shall not be used.

E. Placing Concrete. Concrete shall be conveyed, deposited, and consolidated by any method which will preclude the segregation or loss of ingredients.

F. Joints. The work shall be so prosecuted that construction joints will occur at designated places shown on the Standard Drawings unless otherwise authorized by the Engineer. The Contractor shall construct, in one continuous concrete placing operation, all work comprised between such joints.

All construction joints having a roughened surface shall be cleaned prior to placement of the adjacent concrete as directed by the Engineer.

Expansion and contraction joints in concrete structures shall be formed where shown on the Standard Drawings. No reinforcement shall be extended through the joints, except where specifically noted or detailed on the Plans.

No direct payment will be made for furnishing and placing asphaltic paint, premolded asphaltic filler or other types of joint separators.

G. Backfilling. Structures which lie within the area to be paved, or within two feet of the back of curb, such as curb inlets or junction boxes, shall be backfilled with granular material meeting the requirements of backfilling material specified in Section 305 of these Specifications. Backfill not within two feet of the paving area may be earthen material. Earth backfill shall be placed in accordance with the requirements specified in Section 305 of these Specifications.

H. Weather Requirements. Refer to Section 604.2 of these Specifications.

I. Finishing. Refer to Section 604.11 of these Specifications

J. Inverts. Inverts for inlet boxes, junction boxes, and other drainage structures shall be constructed with cement mortar after other concrete work has been done. Inverts shall be smoothly finished in accordance with the Plans and to ensure a smooth flow of water through the structure.

K. Removal of Forms. Forms shall remain in place until, in the opinion of the Engineer, it is safe to remove them. In determining the time for removal of forms, consideration shall be given to the location and character of the structure, the weather, and other conditions influencing the setting of the concrete and the requirements for curing and finishing.

1002.4 Manholes and Junction Boxes.

A. Manholes. See Division 3000 of these Specifications and the Standard Drawings.

B. Junction Boxes. See Standard Drawings.

C. Area Inlets. Precast area inlets shall be constructed in accordance with the *Missouri Standard Specifications and Standard Drawings for Highway Construction*, latest edition.

Reinforced concrete area inlets shall conform to these Specifications. Concrete cover over steel reinforcement shall be not less that one inch for covers and 1½ inches for walls and floors. All exposed concrete shall have smooth steel trowel or brushed finish. Interiors of structures shall have the forms removed and surface voids filled.

All area inlets shall have the language "Do Not Dump, Drains to River" or similar language located on a plaque on the lid. See the APL for approved plaques.

1. Grated Area Inlets. Grated Area Inlets shall conform to the *Missouri Standard Specifications and Standard Drawings for Highway Construction*, latest edition.

2. Weir Area Inlets. Weir Area Inlets shall conform to the Standard Drawings.

D. Reinforced Concrete Box Culverts. Whether reinforced concrete box culverts are precast or cast in place, they shall conform to the *Missouri Standard Specifications and Standard Drawings for Highway Construction*, latest edition.

E. Paved Ditches. Paved Ditches shall not be allowed in City Right-of-Way.

F. Headwalls, Wingwalls, and Endwalls. These structures shall conform to the *Missouri Standard Specifications and Standard Drawings for Highway Construction*, latest edition.

G. Railroad Crossings. Railroad crossings shall be designed and constructed as is required by the Railroad.

1002.5 Curb Inlets. Curb Inlets installed with a 6 inch upright curb shall conform to the *Missouri Standard Specifications and Standard Drawings for Highway Construction*, latest edition. Curb Inlets installed

with a lip curb shall conform to the Standard Drawings. All curb inlets shall have the language "Do Not Dump, Drains to River" or similar language located on a plaque on the lid. See the APL for approved plaques.

A. Water Spread in Streets. Inlets shall be located to provide clear driving lanes for the street classifications as specified below.

1. Local Streets. Inlets shall be spaced at such an interval as to provide one clear lane of traffic having a minimum width of 10 feet during the peak flows of a design storm having a 10 year frequency.

2. Collector Streets. Inlets shall be spaced at such an interval as to provide one clear lane of traffic having a minimum width of 12 feet during the peak flows of a design storm having a 25 year frequency. The clear lane shall be centered on the centerline of the roadway.

3. Arterial Streets. Inlets shall be spaced at such an interval as to provide one clear lane of traffic in each direction during the peak flows of a design storm having a 25 year frequency. Two lanes of traffic being defined as 20 feet in width, being 10 feet on either side of the crown, for undivided roadways, and as one 12 foot wide lane on each side of the median for divided roadways.

SECTION 1003 – UNDERDRAINS

1003.1 Location. Underdrains may be installed on all classes of streets at the low points, or sags, in the vertical alignment. They shall be placed across the travel lanes and drain to a curb inlet. Underdrains shall be installed at all locations as indicated on the Plans or as directed by the Engineer. The Engineer may direct installation of underdrains at other locations such as cuts, rock cuts, etc.

1003.2 Materials. Underdrain pipe and associated material shall conform to the *Missouri Standard Specifications and Standard Drawings for Highway Construction*, latest edition.

SECTION 1004 – PAYMENT

1004.1 Storm Pipe. Payment for Storm Pipe shall be made at the contract unit price and shall include the cost of all materials, labor, equipment, installation, relocation, and maintenance, and all else necessary to provide a complete and functional project as outlined on the Plans and specified these Specifications. Payment of Storm Pipe shall be measured to the inside wall of a structure. If no pay item for Storm Pipe is included in the contract, it shall be considered incidental to the work and no direct payment will be made.

1004.2 Manholes. Payment for Manholes shall be made at the contract unit price and shall include the cost of all materials, labor, equipment, installation, relocation, and maintenance, and all else necessary to provide a complete and functional project as outlined on the Plans and specified in these Specifications. If no pay item for Manhole is included in the contract, it shall be considered incidental to the work and no direct payment will be made.

1004.3 Junction Boxes. Payment for Junction Boxes shall be made at the contract unit price and shall include the cost of all materials, labor, equipment, installation, relocation, and maintenance, and all else necessary to provide a complete and functional project as outlined on the Plans and specified in these Specifications. If no pay item for Junction Box is included in the contract, it shall be considered incidental to the work and no direct payment will be made.

1004.4 Area Inlets. Payments for Area Inlets shall be made at the contract unit price and shall include the cost of all materials, labor, equipment, installation, relocation, and maintenance, and all else necessary to provide a complete and functional project as outlined on the Plans and specified in these Specifications. If no pay item for Area Inlets is included in the contract, it shall be considered incidental to the work and

no direct payment will be made.

1004.5 Curb Inlets. Payments for Curb Inlets shall be made at the contract unit price and shall include the cost of all materials, labor, equipment, installation, relocation, and maintenance, and all else necessary to provide a complete and functional project as outlined on the Plans and specified in these Specifications. If no pay item for Curb Inlet is included in the contract, it shall be considered incidental to the work and no direct payment will be made.

1004.6 Underdrains. Payment for Underdrains shall be made at the contract unit price and shall include the cost of all materials, labor, equipment, installation, relocation, and maintenance, and all else necessary to provide a complete and functional project as outlined on the Plans and specified in these Specifications. If no pay item for Underdrains is included in the contract, it shall be considered incidental to the work and no direct payment will be made.

DIVISION 2000 – WATER MAIN CONSTRUCTION

SECTION 2001 – GENERAL

2001.1 Scope. The design and construction of water main construction shall be in conformance with Missouri Department of Natural Resources Minimum Design Standards for Missouri Community Water Systems. The work shall consist of furnishing all labor, materials, and equipment for the complete installation of water main extension and/or alterations, and appurtenances, in conformance with the lines and grades shown on the Plans or as established by the Engineer and as specified herein. Item of work or materials not specifically mentioned, but necessary for the completion of water main construction shall be considered as incidental to other items in the contract. The Contractor shall employ skilled workmen to install the main. The inspector may suspend the work until, in his opinion, skilled personnel are provided. In areas where contamination may permeate into the water system, non-permeable materials for all portions of the water system shall be used including pipe, fittings, service connections, and hydrant leads. No water pipes shall be reused.

SECTION 2002 – DESIGN

2002.1 Pressure. Water pressures in distribution systems below 20 psi are a violation of Missouri Safe Drinking Water Regulation 10 CSR 60-4.080 (9), and MDNR considers pressures below 20 psi to be an imminent hazard to public health.

A. Water Mains. All water mains shall be sized in accordance with a hydraulic analysis based on flow demands and pressure requirements. Minimum pipe size for water mains shall be 8 inches.

B. Distribution Systems. Distribution systems shall be designed to maintain at least 35 psi normal working pressure at ground level at all points in the distribution system under all conditions of design flow not including fire flow.

2002.2 Fire Protection. Systems shall provide a minimum fire flow of 250 GPM for a duration of two hours. Water mains that are not designed to provide fire protection shall not have fire hydrants connected to them.

SECTION 2003 – MATERIALS

2003.1 Materials. Pipes, fittings, and appurtenances containing more than 0.25% lead shall not be used. Packing and jointing materials used in the joints of pipe shall conform to the latest edition of the American Water Works Association (AWWA) standards. Pipe having mechanical joints or slip-on joints with rubber gaskets is preferred. Refer to the APL for approved products. Materials required for construction that are not included on the APL shall require product submittal for review and approval.

Pipe shall be of the type, size, and class shown on the Plans.

A. **Ductile-Iron Pipe:** Ductile-Iron Pipe shall conform to the latest edition of AWWA, ANSI, ASTM, Plastic Pipe Institute (PPI), or Unibell Plastic Pipe Association standards or recommendations, AWWA C151 Ductile Iron Pipe, Centrifugally Cast, for water or other liquids, Class 50, push-on joint, cement-mortar lined, bituminous coated.

B. **Polyvinyl Chloride (PVC), 8"-12":** PVC Pipe, 8"-12" shall conform to the latest edition of AWWA, ASTM, PPI, or Unibell Plastic Pipe association standards or recommendations. PVC pipes eight inches to twelve inches in diameter shall be no less than Class 160 and conform to SDR-26. Polyvinyl Chloride 1120 pipe, meeting AWWA C900 PVC Pipe and Fabricated Fittings, 8 In.-12 In. (200 mm-300 mm), for Water Transmission and Distribution, outside diameter equivalent to cast iron pipe, 150 psi pressure class, DR (dimension ratio) 18, gasket bell-end coupling. Installation

requirements shall be the same as ductile iron pipe.

C. **PVC Pipe, 14"-24":** PVC Pipe, 14"-24"shall conform to the latest edition of AWWA, ASTM, PPI, or Unibell Plastic Pipe association standards or recommendations. Where specified, shall be polyvinyl 1120 pipe, meeting AWWA C905 Polyvinyl Chloride (PVC) Pressure Pipe and Fabricated Fittings, 14 in. Through 48 in. (350 mm Through 1,200 mm), for water transmission and distribution, cast iron outside diameter, DR 18, pressure Class 235.

D. **HDPE DR 11.** Shall be installed per AWWA C906 Appendix A and MDNR's Minimum Design Standards for Missouri Community Water Systems. Concrete straddle block restraints shall be installed at points of tie-in to prevent movement. When connecting HDPE pipe to other types of pipe, PPI guidelines shall be used.

E. **Ductile Iron Fittings:** Ductile Iron Fittings shall conform to the latest standards issued by the AWWA and shall be certified by NSF for use in drinking water. To meet AWWA C110 Ductile-Iron & Gray-Iron Fittings for water, mechanical joint, cement-mortar lined, bituminous coated; 12 inch and smaller fittings to be 250 lb.; 16 inch and larger fittings to be 150 lb. Fittings shall have at least the same pressure rating as the pipe.

F. **PVC Fittings 6"-8":** PVC Fittings 6"-8"shall conform to the latest standards issued by the AWWA and shall be certified by NSF for use in drinking water. Fittings shall have at least the same pressure rating as the pipe.

G. **Gate Valves:** Gate Valves shall conform to the latest standards issued by the AWWA and shall be certified by NSF for use in drinking water. NRS resilient wedge for buried service, conforming as a minimum to AWWA C509 Resilient-Seated Gate Valves for Water Supply Service; 2" square operating nut; open left; MJxMJ; wedge rubber shall be molded and bonded in place to the wedge and shall not be mechanically attached with screws, rivets, or similar fasteners; wedge shall seat so the seating is equally effective regardless of direction of pressure unbalanced across the wedge; waterway shall be full diameter, smooth and shall have no depressions or cavities in the seat area where foreign material can lodge and hinder closure or sealing, the valve body and bonnet shall be fusion bonded epoxy coated, inside and out, and the valve shall be provided with stainless steel bonnet and packing bolts.

H. **Tapping Valves:** Tapping Valves shall conform to the latest standards issued by the AWWA and shall be certified by NSF for use in drinking water. NFPA standards shall be followed for commercial building fire protection systems. Same as Gate Valves above except that it shall be equipped with a raised lip constructed in accordance with MSS-SP60 to provide for centering of the valve on the tapping saddle.

I. **Tapping Sleeves:** Tapping Sleeves shall conform to the latest standards issued by the AWWA and shall be certified by NSF for use in drinking water. Manufactured from all stainless steel group 18-8, material 304 including sleeve, outlet neck, outlet flange, and all bolts and nuts; seal to be full circumferential gridded and approved for potable water; flanged outlets shall be indexed per MSS-SP 60 to accept tapping valves with an ANSI 150 lb. valve Drilling IAW, according to AWWA C207 Steel Pipe Flanges for Waterworks Service- Sizes 4 In. Through 144 In. (100 mm Through 3,600 mm); neck to accept full size cutter. An ANSI 250 lb. valve shall be used for commercial building fire protection systems.

J. **Concrete:** All concrete used within this Section shall be meet the same mix design as stated in Section 602 of these Specifications and shall conform to the *Missouri Standard Specifications for Highway Construction,* latest edition, unless otherwise approved by the Engineer.

K. **Anchors, Inserts, Reinforcements:** All thread rods shall be ¾" stainless steel, group 18-8, material 304, minimum yield of 70 KSI, minimum tensile 100 KSI. Nuts shall be hex head, ¾" stainless steel, group 18-8, material 304.

L. **Steel Casing Pipe:** Steel casing pipe shall conform to the *Missouri Standard Specifications for Highway Construction,* latest edition.

M. **Fire Hydrants:** Shall be 4 foot bury, open clockwise, have a traffic flange, and be painted yellow. Refer to APL for approved manufacturers. The hydrant lead line (the line from the main to the

hydrant) shall be designed to match the ability of the system to supply flows to the fire hydrant that will not reduce pressures anywhere in the system below 20 psi when the hydrant is fully opened. A throttling valve shall be installed on the lead line to isolate the hydrant. Thrust restraint shall be provided for the throttling valve so that the hydrant may be removed without shutting down the supply main. When installing hydrants on PVC main, the hydrant shall have an anchor coupling to prevent damage to the main in the event that the hydrant is hit during a traffic accident.

N. **Tracer Wire:** All water mains shall be installed with a tracer wire attached. For open trench installation, the tracer wire shall be blue coated, 12 gauge AWG-THHN solid copper, insulation thickness 0.030", and be approved for direct bury purposes. For directional bore purposes, the tracer wire shall be blue coated, 12 gauge copper clad steel with HDPE, insulation thickness of 0.045", and be approved for direct bury purposes. In both cases, the wire shall be installed with as few splices as possible and be installed the entire length of the water main. Splices shall utilize splice kits as approved on the APL with no bare wire exposed. Splices shall be sealed with silicone sealant, aqua seal, or equivalent, and covered with electrical tape. The two ends of the wire shall be knotted to prevent strain on the splice. Branch connections shall be made without cutting the main wire utilizing a connection clip and sealing the joint the same as the splices.

The wire shall be securely attached to the pipe to retain its position during backfill. The wire shall be run up the outside of all valve boxes and tucked under the lid, shall be run inside all air release valve vaults, and shall continue through the vault. A minimum of 5 feet of wire should be neatly coiled inside the vault. For fire hydrant lines with the hydrant located more than 5 feet from the valve, a single wire from the valve to the hydrant shall be installed.

2003.2 Material Handling.

A. **PVC Pipe and Fittings**: Shall be handled according to guidelines set out in the AWWA M23 PVC Pipe-Design and Installation manual. The pipe shall not be handled with individual chains or single cables, even if padded. They shall not be dropped to the ground or into the trench and shall not be dropped or rolled against other objects on the ground. Gaskets shall be protected from excessive exposure to direct sunlight, ozone, oil, and grease. If stored for extended periods, the pipe and fittings shall be protected from direct sunlight and shall be laid so as not to become deformed or bent.

B. **Ductile Iron Pipe and Accessories:** The handling of pipe, fittings, valves, hydrants, and accessories shall conform as a minimum to AWWA C600 Installation of Ductile-Iron Water Mains and Their Appurtenances. They shall be loaded and unloaded by lifting with hoists or skidding so as to avoid shock or damage. Under no circumstances shall such materials be dropped or rolled against pipe or fittings already on the ground.

C. **HDPE Pipe and Fittings:** Shall be handled according to the guidelines set forth in AWWA C906-07. Care shall be taken to prevent cuts, scratches, and other damage.

SECTION 2004 – LOCATION

2004.1 Location.

A. **Alignment and Grade:** The water mains shall be laid, and valves, hydrants, and fittings shall be placed in accordance with the Plans. All pipe shall have a minimum of 42 inches of cover over the top of the pipe unless otherwise approved by the Engineer. Maximum water line depth shall be 5 feet from the top of pipe at finished grade unless otherwise approved by the Engineer.

B. **Dead Ends:** In order to provide increased reliability of service and reduce head loss, dead ends shall be minimized by making appropriate tie ins whenever practical. If a tie in is not practical, the dead end of a water main shall have a fire hydrant.

C. **Valves:** Where new water mains connect, a valve shall be installed on each branch off of the main line and one on the main line. Where new water mains connect to an existing main, a valve shall be

on the new line.

D. **Bends, Tees, Plugs, and Hydrants:** All fittings shall have thrust reinforcement, either in the form of approved manufactured restraint, stainless steel rods, or a properly designed thrust block of concrete. Thrust blocks shall be the first choice of thrust reinforcement. If thrust blocks are not possible, then additional restraints may be used with approval from the Engineer. Additional restraints shall be placed on three joints extending a minimum of 60 feet from the location of the fitting. Joint restraint devices shall be used in lieu of thrust blocks at all vertical bend locations (down bends and up bends). The devices shall extend a minimum of 3 pipe joints (57 feet) each direction from the bend or as otherwise directed in the manufacturer's recommendations. Hydrant assemblies (tees, valves, and hydrants) shall use anchor couplings for thrust reinforcement. Hydrant spacing shall be per MDNR requirements.

E. **Water Mains Near Sewers:**

1. **Parallel Separation:** A water main shall be laid at least ten (10) feet horizontally from any existing or proposed non-potable fluid line. The distance shall be measured edge to edge. If it is not practical to maintain ten (10) feet of separation, a deviation may be allowed, with approval from the Engineer, to install the water main closer to a non-potable fluid line, provided that the water main is laid in a separate trench located as far away from the non-potable line as feasible. Locating a water main on an undisturbed earth shelf located on one side of the non-potable line is not recommended and requires approval from the Engineer. In all cases, an elevation shall be maintained such that the bottom of the water main is at least 18 inches above the top of the non-potable line while meeting minimum cover requirements. In areas where the recommended separations cannot be obtained, either the water line or non-potable line shall be constructed of mechanical or manufactured restrained joint pipe, fusion welded pipe, or cased in a continuous casing. Casing pipe must be a material that is approved for use as water main. Conventional poured concrete is not an acceptable encasement.

2. **Separation at Crossings:** Water mains crossing sewers or any other lines carrying non-potable fluids shall be laid to provide a minimum vertical clear distance of 18 inches between the outside of the water main and the outside of the non-potable pipeline. This shall be the case where the water main is either above or below the non-potable pipeline. At crossings, the full length of water pipe shall be located so both joints will be as far from the non-potable pipeline as possible but in no case less than ten (10) feet or centered on a 20 foot pipe. In areas where the recommended separations cannot be obtained, either the water line or non-potable pipeline shall be constructed of mechanical or manufactured restrained joint pipe, fusion welded pipe or cased in a continuous casing that extends no less than ten feet on both sides of the crossing. Special structural support for the water and non-potable pipes may be required. Casing pipe must be a material that is approved for use as water main. Conventional poured concrete is not an acceptable encasement.

3. **Unusual Conditions:** Where conditions prevent the minimum separations as set forth above from being met or maintained, the Missouri Department of Natural Resources shall be consulted regarding necessary precautions to be taken to protect the public water supply.

4. **Sanitary Sewer Force Mains:** There shall be at least ten (10) feet of horizontal separation between water mains and sanitary sewer force mains and they shall be in separate trenches. In areas where these separations cannot be obtained, either the waterline or the sewer line shall be constructed of mechanical joint pipe or cased in a continuous casing, be constructed of mechanical joint pipe, or be jointless or fusion welded pipe. Where possible, the waterline shall also be at such elevation that the bottom of the water main is at least 18 inches above the top of the non-potable line. Casing pipe must be a material that is approved for use as water main. Conventional poured concrete is not an acceptable encasement.

5. **Sewer Manholes:** No water line shall be located closer than ten (10) feet to any part of a sanitary or combined sewer manhole. Where separation cannot be obtained, the water line shall be constructed of mechanical or manufactured restrained joint pipe, fusion welded pipe, or cased

in a continuous casing. Casing pipe must be a material that is approved for use as water main. The full length of water pipe shall be located so both joints will be as far from the manhole as possible, but in no case less than ten (10) feet or centered on a 20 foot pipe. No water pipe shall pass through or come into contact with any part of a sanitary or combined sewer manhole.

6. Disposal facilities: No waterline shall be located closer than 25 feet to any wastewater disposal facility, agricultural waste disposal facility, or landfill. Water lines shall be separated by a minimum of 25 feet from septic tanks and wastewater disposal areas such as cesspools, subsurface disposal fields, pit privies, land application fields, and seepage beds.

F. Surface Water Crossings. Surface Water Crossings shall be designed for the specific location and approved by the Engineer.

1. Above Water Crossings. The pipe shall be adequately supported and anchored, protected from damage and freezing and accessible for repair and replacement.

2. Underwater Crossings.

A. Flowing streams and water body crossings five hundred feet or less in length shall have a minimum cover of four feet over the pipe. When crossing water courses greater than 15 feet in width, the following shall be provided:

1. The pipe shall be of special construction, having flexible watertight joints. Steel or ductile iron ball-joint river pipe shall be used for open cut crossings. Mechanical or restrained joint or fusion welded pipe may be used for open cut crossings, provided it is encased in a welded steel casing. Mechanical or restrained joint or fusion weld pipe shall be used for bored crossings.

2. Adequate support and anchorage shall be provided on both sides of the stream.

3. Valves shall be provided at both ends of water crossings so that the section can be isolated for testing or repair; the valves shall be easily accessible and should not be subject to flooding.

4. The valve closest to the supply source shall be in an accessible location and installed in a vault, manhole, or meter pit sized to allow the installation of leak detection equipment.

5. Permanent taps shall be provided on each side of the valve within the manhole, vault, or meter pit to allow insertion of a small meter to determine leakage and for sampling purposes.

6. Stream movement and the history of bank erosion must be considered when choosing the length that the crossing pipe or casing shall extend beyond the upper edge of the stream channel. The stream crossing pipe or casing shall extend at least 15 feet beyond the upper edge of the stream channel on each side of the stream.

B. For lake, water body, and flood plain crossings greater than 500 feet in length, the design shall consider the ability to access and repair or replace the pipe in these crossings. Consideration shall also be given to the ability to continue service to areas served by the crossing in the event of a submerged leak or pipe break.

1. Submerged portions of pipe crossing proposed lakes shall not be buried when the submerged pipe is greater than 500 feet in length except for the transition from water to land.

2. Steel or ductile iron ball-joint river pipe or fusion welded pipe shall be used under water during normal flow conditions. Mechanical, restrained joint, or fusion welded pipe shall be used in flood plains.

3. Underwater installations shall be tested for leaks prior to installation.

4. Valves above the high water level shall be provided at both ends of water crossings so that the section can be isolated for testing or repair.

5. The valve closest to the supply source shall be in an accessible location and installed in a vault, manhole, or meter pit sized to allow the installation of leak detection equipment.

6. Permanent taps shall be provided on each side of the valve within the manhole, vault, or meter pit to allow insertion of a small meter to determine leakage and for sampling purposes.

C. Intermittent Flowing Streams

1. Restrained joint or thermal welded pipe shall be used for all stream crossings.

2. The pipe shall extend at least 15 feet beyond the upper edge of the stream channel on each side of the stream.

3. Adequate support and anchorage shall be provided on both sides of the waterway.

G. **Contaminated Soil.** In areas that are contaminated with organic chemicals, permeation of organic chemicals into the water system shall be prevented by using ductile iron for all portions of the water system including pipe, fittings, service connections, and hydrant leads.

SECTION 2005 – EXCAVATION AND PREPARATION OF THE TRENCH

2005.1 Excavation and Preparation of the Trench. Refer to Section 305 of these Specifications.

A. **Size and Alignment:** The trench shall be excavated such that the pipe can be laid to the proper grade and alignment as shown on the approved Plans. Bell holes shall be provided at each joint to permit proper jointing and ensure the pipe is supported evenly along the entire length of the barrel. This is especially important for PVC pipe. Hand excavation shall be employed in trenching when deemed necessary by the Engineer.

SECTION 2006 – INSTALLATION OF MAINS

2006.1 Standards. Unless otherwise specified, AWWA standards and manufacturer's recommendations shall be followed during installation procedures.

2006.2 Pipe Laying. All pipe, fittings, valves, and hydrants shall be carefully lowered into the trench by means of ropes or mechanical equipment. Under no conditions may they be dropped or thrown. Precautions shall be taken to protect the interiors of the pipes, fittings, and valves against contamination prior to and during installation in accordance with the latest revision of AWWA 651. Ends of all pipe must be thoroughly cleaned.

After placing a length of pipe in the trench, the spigot end shall be centered in the bell, the pipe forced home and brought to the proper grade and alignment. The pipe shall be secured in place with proper backfill material tamped around and over it except at the bells. Bells shall be in the direction of laying operations.

At noon, at night, or any time that work is delayed, the open end of the line must be covered. All joint deflections must be within the pipe manufacturer's recommendations, and hereby included in and made a part of these Specifications.

PVC pipe may be deflected around curves so long as deflection is in the joint only. No strain shall be placed on the pipe for the purpose of deflection. Manufacturers may vary in the amount of deflection which can be obtained in the pipe joint and their specifications should be consulted. In the absence of manufacturer specifications, use the Maximum Joint Deflection Table found in the City Standard Details.

Blocks shall not be used to change pipe grade or to intermittently support pipe across excavated sections. No pipe fitting shall be laid in or under water.

A. **Jointing.** All joints must be made as per the manufacturer's recommendations and AWWA specifications. HDPE joints shall be made per PPI specifications.

B. **Valves.** Valves shall be located as designated on the Plans and at streets, bridges, railroads, waterway crossings, dead ends, and at all fire hydrants. All valves shall be protected by a valve box of six inches minimum diameter, the top of which shall be to the same grade as the existing terrain or finished grade.

SECTION 2007 – ANCHORAGE

2007.1 Anchorage. Plugs, Caps, Bends: All plugs, caps, tees, end valves, fire hydrant valves, bends, reducers, and crosses, unless otherwise indicated on the approved Plans, shall be anchored to prevent movement by providing suitable reaction blocking in the form of concrete thrust blocks or approved manufactured restraints. Reaction blocking or thrust restraints shall be designed to withstand the specific forces expected in the particular construction conditions. Tie rods shall be stainless steel and installed in accordance with the following schedule.

Number of Tie Rods Required for a Closed Valve or Dead End					
Pipe Size	8 inch	10 inch	12 inch	16 inch	24 inch
No. of ¾ Inch Rods	2	4	4	8	14

SECTION 2008 – BACKFILLING

2008.1 Backfilling. See Sections 305 and 402 of these Specifications.

SECTION 2009 – TESTING

2009.1 Testing.

A. **Pressure.** After the pipe has been laid and backfilled, all newly laid pipe or any valve section thereof shall be subject to a hydrostatic pressure of 150 psi for a minimum period of 24 hours. This pressure test will be made by the Water Division forces. The Contractor will be responsible for the cost of taps for this test. Any defects in pipes, valves, fittings, or hydrants must be immediately corrected by the Contractor and successive tests shall be run until satisfactory to the Engineer.

B. **Connections to Existing Mains.** Under no conditions will any parties other than Water Division forces be allowed to make any taps or connections to an existing main.

C. **Operation of Existing Pressurized Valves.** All valves under pressure in the mains supplied by the Water Division shall be operated only by employees of the Water Division except in cases of extreme emergency.

D. **Leakage.** After satisfactory completion of the aforesaid pressure test, a leakage test shall be run. Leakage test shall be maintained for a period of at least 24 hours under a pressure of 150 psi. All lines shall meet AWWA leakage standards as shown on the following chart.

Allowable Leakage (gal/hr) for 1000 ft of Gasketed PVC or Ductile Iron Pipe	
Pipe Size (Inch)	Average Test Pressure in Pipeline, psi
8	0.66
10	0.83
12	0.99
14	1.16
16	1.32
18	1.49
20	1.66
24	1.99
30	2.48
*Note: The allowable leakage for test sections with different diameters is the sum of the computed leakage for each pipe size.	

E. **Flow Testing Fire Hydrants.** All fire hydrants shall be flow tested to determine the maximum flow that each hydrant can produce without dropping the system pressures below 20 psi. If a throttling

mechanism is used, it shall then be set at the maximum flow that will not drop system pressures below 20 psi. The Contractor is responsible for providing protection of work from the pressurized discharge.

F. **Fire Systems for Commercial Buildings.** Fire systems for commercial buildings shall be tested to NFPA standards.

G. **Final Tests.** After final test procedures and main is connected to the existing system, it shall be subjected to normal working pressure. If, at any time within one year of final inspection, any trouble or failure in the respective line or lines occurs that can be directly attributed to faulty workmanship or defective materials, it shall be the Contractor's or Developer's financial responsibility to repair.

H. **Disinfection.** All disinfection, chlorination, and flushing of main will be done by the Water Division of the City of Cape Girardeau, Missouri to meet AWWA C651 Disinfecting Water Mains. Contractor shall furnish and place disinfecting media, preferably a 70% hypochlorite granular form, in the mains as pipe is laid. Disinfecting media shall be placed in the manner and in amounts as specified by the Engineer, but to be a minimum of 50 PPM.

$$\text{Pounds of Granular form} = \frac{50 \text{ PPM} \times \text{vol. of pipe length cu. Ft.} \times 2.83}{\text{\% Available CL (wt. of granular grams)}}$$

Following disinfection and flushing, bacteriological samples shall be collected by Water Division personnel in accordance with AWWA "Standard Methods for the Examination of Water and Wastewater" and shall show the absence of coliform organisms. Bacteriological samples shall be tested at a laboratory approved by the City. The number and location of samples shall be determined by Water Division personnel. Should any of the samples prove positive, the Contractor shall repeat the disinfecting process and the Water Division will again collect samples for testing. Water from the new main shall remain isolated from other waters in the City system, and shall not be made available for consumption until bacteriological testing indicates that the water meets drinking water standards of the Missouri Department of Natural Resources.

I. **Tracer Wire.** After construction is complete and final grading finished, a continuity test must be performed on the tracer wire. Any breaks in the circuit must be repaired by the Contractor prior to acceptance of the water main by the City.

SECTION 2010 – PAYMENT

2010.1 Pipe. Payment for Pipe shall be made at the contract unit price and shall include the cost of all materials, labor, equipment, installation, relocation, and maintenance, and all else necessary to provide a complete and functional project as outlined on the Plans and as specified in these Specifications. If no pay item for Pipe is included in the contract, it shall be considered incidental to the work and no direct payment will be made.

2010.2 Valves. Payment for Valves shall be made at the contract unit price and shall include the cost of all materials, labor, equipment, installation, relocation, and maintenance, and all else necessary to provide a complete and functional project as outlined on the Plans and as specified in these Specifications. If no pay item for Valves is included in the contract, they shall be considered incidental to the work and no direct payment will be made.

2010.3 Tapping Sleeves. Payment for Tapping Sleeves shall be made at the contract unit price and shall include the cost of all materials, labor, equipment, installation, relocation, and maintenance, and all else necessary to provide a complete and functional project as outlined on the Plans and as specified in these Specifications. If no pay item for Tapping Sleeves is included in the contract, they shall be considered incidental to the work and no direct payment will be made.

2010.4 Anchors, Inserts, Reinforcements. Payment for Anchor, Inserts, and/or Reinforcements shall be made at the contract unit price and shall include the cost of all materials, labor, equipment, installation, relocation, and maintenance, and all else necessary to provide a complete and functional project as outlined on the Plans and as specified in these Specifications. If no pay item for Anchors, Inserts, and/or Reinforcements is included in the contract, these items shall be considered incidental to the work and no direct payment will be made.

2010.5 Fire Hydrant Assemblies. Payment for Fire Hydrant Assemblies shall be made at the contract unit price and shall include the cost of all materials, labor, equipment, installation, relocation, and maintenance, and all else necessary to provide a complete and functional project as outlined on the Plans and as specified in these Specifications. If no pay item for Fire Hydrant Assemblies is included in the contract, they shall be considered incidental to the work and no direct payment will be made.

DIVISION 3000 – SANITARY SEWER MAIN CONSTRUCTION

SECTION 3001 – GENERAL

3001.1 Scope. The design and construction of sanitary sewer construction shall be in conformance with Missouri Department of Natural Resources Clean Water Commission Design Guides. These Specifications shall apply to the construction of all ductile iron, polyvinyl chloride (gravity and pressure), and HDPE (pressure) sewer line, and the construction of all appurtenances, including manholes, pipe ends, and other items called for. The work under this section consists of furnishing all labor, materials, equipment, and incidentals, and performing all operations necessary in connection with the installation of the sanitary sewer system complete as shown on the Plans and as herein specified. These materials and work shall be subject to inspection and standard testing by the Engineer, or his authorized agents, as part of the project. All rejected materials and work shall at once be removed from the project.

SECTION 3002 – MATERIALS

3002.1 Vitrified Clay Pipe and Fittings. No new vitrified clay pipe shall be placed within the City's Rights-of Way.

3002.2 Cast Iron Pipe. No new cast iron pipe shall be placed in within the City's Rights-of-Way.

3002.3 Ductile Iron Pipe Pipe, Fittings, and Valves

A. **Ductile Iron Pipe and Fittings.** All ductile iron pipe three (3) inches through sixty-four (64) inches in diameter and all joint types shall conform to ANSI A21.51/AWWA C151 Ductile-Iron Pipe, Centrifugally Cast, and shall be Pressure Class 50. The pipe shall have a cement mortar lining installed in accordance with ANSI A21.4/AWWA C104 Cement-Mortar Lining for Ductile-Iron Pipe and Fittings for water. The outside coating shall be a bituminous coating approximately one mil thick. Ductile iron gravity sewer pipe shall also conform to ANSI/ASTM A746 Standard Specification for Ductile Iron Gravity Sewer Pipe.

   Ductile iron pipe fittings shall conform to the ANSI/AWWA C111 AWWA Standard for Rubber-Gasket Joints for Ductile-Iron Pressure Pipe and Fittings, and shall have a cement mortar lining installed in accordance with ANSI A21.4-95/AWWA C104 Cement-Mortar Lining for Ductile-Iron Pipe and Fittings for water. The outside coating shall be a bituminous coating approximately one mil thick. The fittings shall be the same pressure class as the specified ductile iron pipe.

B. **Gate, Check, and Air Relief Valves.** Gate valves used in ductile iron pressure sewer lines shall be the AWWA non-rising stem type with cast iron bodies. The valves shall be the bronze mounted, parallel seated, double disc type, with four point wedging mechanisms and double disc assemblies. Gate valves located underground shall have mechanical joints; those not located underground shall have flanged fittings.

   Check valves shall be the lever and spring operated swing type. The valves shall be fully bronze mounted, with cast iron bodies and stainless steel hinge pins. The valves shall be capable of being mounted in either horizontal or vertical position.

   Air relief valves shall be placed at high points in the pressure sewer line and at the locations indicated on the Plans. Automatic air relief valves suitable for use on wastewater force mains shall be required.

3002.4 Polyvinyl Chloride Pipe, Fittings, Valves, and Adaptors

A. **PVC Pressure Sewer Pipe.** PVC plastic pressure sewer pipe shall be Pressure Class 150 and shall conform to AWWA C900 PVC Pipe and Fabricated Fittings, 4 in. Through 12 in. (100 mm Through 300 mm), for Water Transmission and Distribution. The PVC pipe shall have molded bell push-on joints with elastomeric-gasket couplings. The male end shall be marked by a painted ring showing the proper insertion. The PVC pipe shall bear the National Sanitation Foundation (NSF) seal of approval.

   Fittings for the PVC pipe shall be furnished by the pipe manufacturer and shall accommodate the pipe for which they are to be used. The fittings shall have a minimum pressure rating of 150 psi. Insertion depth of the pipe in the coupling shall be controlled by an internal PVC mechanical stop in the coupling which will allow for thermal expansion and contraction. All fittings must bear the NSF seal of approval.

B. **PVC Gravity Sewer Pipe.** PVC plastic gravity sewer pipe shall be SDR 35 with a minimum pipe stiffness (PS) of 46 psi and shall conform to the requirements of the latest revision of the ASTM D3034 Standard Specification for Type PSM Poly(Vinyl Chloride) (PVC) Sewer Pipe and Fittings. The pipe shall be joined with a bell and spigot type of elastomeric gasket joint. All fittings shall utilize elastomeric gasket joints.

C. **Gate, Check, and Air Relief Valves.** Gate, check, and air relief valves used on PVC plastic pressure sewer pipe shall conform to the requirements described in Section 3002.3B of these Specifications. All gate and check valves shall have a mechanical joint PVC adaptor at each end.

D. **Manhole Adaptors.** Where polyvinyl chloride PVC sewer pipe is laid into a manhole, manhole adaptors shall be a neoprene coupling, or otherwise approved water stop material, shall be grouted into the manhole wall. The adaptors shall be installed in accordance with the manufacturer's recommendations as approved by the Engineer.

3002.5 HDPE Pipe and Fittings

A. **HDPE Pressure Sewer Pipe and Fittings.** HDPE pressure sewer pipe and fittings shall conform to ANSI/AWWA C901 and ANSI/AWWA C906. The pipe and fittings shall be made of polyethylene plastic having a grade of PF34 with a minimum cell classification of 345464C, as defined in ASTM D 3350. Pipe shall have an integral wall bell and spigot joint and a minimum wall thickness complying with DR11. The pressure class shall be 1.5 times the working pressure plus 100 psi surge allowance. Fittings shall also comply with the requirements of ASTM D 2683 for socket-type fittings, ASTM D 3261 for butt heat fusion fittings, and ASTM F 1055 for electrofusion type fittings.

3002.6 Steel Casing Pipe. Steel Casing Pipe shall be new, smooth wall, welded steel pipe fabricated from ASTM A36 plate or ASTM A 570 sheet with minimum yield point of 36,000 psi conforming to AWWA C200. The casing pipe shall have a wall thickness as follows:

Casing Diameter (inches)	Minimum Wall Thickness (inches)
<14	0.188
14 to 16	0.188
18 to 22	0.250
24 to 26	0.281
28 to 34	0.312
36 to 48	0.344

The casing pipe shall be cleaned and coated both inside and outside with two coats of a bituminous based product. See APL for approved coatings. Both ends of each carrier pipe shall be closed seamless

pull-on-type synthetic rubber end seals. The end seals shall be secured to the casing and carrier pipe with T-304 stainless steel banding straps with a 100% non-magnetic worm gear mechanism. The end seal installation shall not require any special tools.

3002.7 Polypropylene Pipe and Fittings. Fittings and connections shall provide a watertight connection according to the requirements of ASTM D3212. Gaskets shall meet ASTM F477. Polypropylene pipe shall be joined with a gasketed integral bell and spigot joint meeting ASTM F2736 requirements. Spigot shall have two gaskets meeting the requirements of ASTM F477. Gaskets shall be installed by the pipe manufacturer and covered with a removable, protective wrap to ensure the gaskets are free from debris. A joint lubricant shall be used on the gasket and bell during assembly. Polypropylene pipe shall have a reinforced bell with a polymer composite band installed by the manufacturer.

A. **Polypropylene Pipe 12 Inch-30 Inch Diameter.** Polypropylene sewer pipe shall conform to ASTM F2736 and have a smooth interior and annular exterior corrugations.

B. **Polypropylene Pipe 30 Inch-60 Inch Diameter.** Polypropylene sewer pipe shall conform to ASTM F2764 and have smooth interior and exterior surfaces with annular inner corrugations.

SECTION 3003 – CONSTRUCTION CASTINGS

3003.1 Construction Castings

A. **Manhole Frames and Lids.** The manhole castings shall consist of a frame and solid checkered or knobbed lid. See APL for approved manufacturers.

B. **Manhole Steps.** There shall be no manhole steps constructed in new manholes.

3003.2 Precast Reinforced Concrete Manholes. All manholes shall be precast reinforced concrete. The precast reinforced concrete manhole risers and grade rings shall be one type and shall be constructed in accordance with the requirements described herein and ASTM C478. The 48-inch diameter straight section shall be furnished in 48-inch, 36-inch, 24-inch, and 12-inch lengths; each section shall have tongue and groove ends and lifting holes to facilitate handling and installation. The taper section shall be one piece 36 inches high and conical, either concentric or eccentric, with its inside diameter tapering uniformly from 48 inches to 24 inches. See Standard Drawings for additional details.

3003.3 Precast Concrete Manhole Base. The requirements of Precast Reinforced Concrete Manholes shall apply to Precast Concrete Manhole Bases. Precast bases shall be furnished with a watertight flexible gasket, conforming to ASTM C923. The concrete invert may be furnished with the precast unit or the concrete invert fill may be installed in the field and shall conform exactly to the invert elevations of the connecting piping after installation.

The connecting pipe shall be plain end, square cut spigots and shall not protrude more than one inch inside the manhole wall. A clear distance of at least one inch from the end of each connecting pipe and around the pipe shall be provided when the concrete invert fill is installed. This shall be provided under the pipe by a boxout with sides which are at right angles with each other. After completion of the manhole, the boxout shall be filled with suitable non-shrink grout, completely filling the space beneath the pipe and completely filling the space around the pipe. The non-shrink grout material shall provide a smooth, uniform surface between the inside diameter of the pipe and the manhole invert. See this Section for additional information for non-shrink grout.

3003.4 Asphalt Waterproofing. Asphalt waterproofing shall be used to waterproof the exterior of manholes.

3003.5 External Joint Seal. Manhole External Joint Seals shall meet the requirements of ASTM C877 Type I or Type II and are required on all manholes. See APL for approved manufacturers.

3003.6 Reinforcement Steel. Steel bars for concrete reinforcement shall be new billet steel, intermediate grade.

3003.7 Field Placed Concrete. All concrete used within this Section shall be meet the same mix design as stated in Section 602 of these Specifications and shall conform to the *Missouri Standard Specifications for Highway Construction*, latest edition, unless otherwise approved by the Engineer.

3003.8 Non-Shrink Grout. Non-Shrink Grout shall be in the plastic state and show no expansion after set. See APL for approved products.

3003.9 Gaskets, Mastic and Rubber. Mastic gaskets shall conform to ASTM C990. Rubber gaskets shall conform to ASTM C443.

SECTION 3004 – INSTALLATION

3004.1 Pipe Installation.

A. Excavation. See Division 300 of these Specifications.

B. Laying Pipe. All pipe and fittings shall be lowered into the trench piece by piece using derricks, ropes, or other suitable tools or equipment in such a manner as to prevent damage to the pipe. Under no circumstances shall pipe or other materials be dropped or dumped into the trench. Hooks shall not be allowed to come into contact with the joint or coupling material.

Before lowering or while suspended over the trench, each piece of pipe shall be inspected for defects. Any defective, damaged, or unsound pipe shall be rejected and shall be immediately removed and replaced.

Joint contact surfaces shall be cleaned, lubricated, and assembled in accordance with the recommendations of the pipe manufacturer.

Foreign material shall be prevented from entering the pipe while it is being placed in the trench. During laying operations, no debris, tools, clothing, or other materials shall be placed in the pipe.

Pipe laying for gravity sewer shall start at the lowest point and the pipe installed so that the spigot ends point in the direction of flow. All pipes shall be laid straight between changes in alignment and at uniform grade between changes in grade. Blocking shall not be used to bring the pipe up to grade.

Curvilinear alignment of sewers larger than twenty-four (24) inches may be considered on a case-by-case basis, approved by the Engineer, and shall conform to the *Missouri Department of Natural Resources Clean Water Commission Design Guides*, latest edition.

At times when pipe laying is not in progress, the open ends of pipe shall be closed by a water-tight plug or other means approved by the Engineer. When practical, the plug shall remain in place until the trench is pumped dry. Care must be taken to prevent pipe flotation should the trench fill with water. No joints shall be assembled under water.

All necessary cutting of the pipe shall be done in a neat, workmanship like manner with the least amount of waste. The cut end shall be beveled before jointing.

As each length of pipe is placed in the trench, the joint shall be assembled and the pipe brought to correct line and grade. The pipe shall be secured in place with approved bedding and backfill material.

See Section 2004.1 of these Specifications for separation and crossing requirements of water and sanitary sewer.

C. **Slope.** Minimum slope for sewers forty-two (42) inches or less are provided on the following table:

Nominal Size Sewer in Inches	Minimum Slope in Feet per 100 Feet
8	0.40
10	0.28
12	0.22
14	0.17
15	0.15
16	0.14
18	0.12
21	0.10
24	0.08
27	0.067
30	0.058
33	0.052
36	0.046
39	0.041
42	0.037

Sewer sizes not included in the above table should be designed in accordance with the *Missouri Department of Natural Resources Clean Water Commission Design Guides,* latest edition.

Steep slope protection shall be provided for sewers on twenty percent (20%) slope or greater by anchoring securely with concrete anchors, spaced as follows:

Percent of Grade	Center to Center Maximum Spacing (ft)
$20 \leq$ Slope < 35	36
$35 \leq$ Slope < 50	24
$50 \geq$ Slope	16

In situations where flow is continuous and/or grit is a problem, or where velocities greater than ten (10) feet per second are possible, special provisions shall be made to protect against abrasion damage to the pipe and manhole. Such protection may be attained by utilizing ductile iron pipe.

D. **Bedding**. See Sections 305 and 402 of these Specifications. Bedding for PVC pipe shall be as described in ASTM D2321. Bedding for HDPE pipe shall be the same as PVC pipe except as described in ASTM D2680.

E. **Backfilling.** See Sections 305 and 402 of these Specifications.

F. **Pavement Repair.** See Division 700 of these Specifications.

G. **Thrust Restraints for Pressure Pipe.** All plugs, caps, tees, and bends, unless otherwise specified, shall be provided with reaction backing, or suitably restrained by attaching metal rods, clamps, or restrained joints approved by the Engineer. Vertical and horizontal reaction blocking shall be made of concrete having a compressive strength of not less than 4000 psi after twenty-eight days. Concrete blocking shall be placed between solid ground and the fitting to be anchored; the area of bearing on the pipe and on the ground in each instance shall be that shown or directed by the Engineer. The blocking shall be so located as to contain the resultant thrust force and so that the pipe and fitting joints will be accessible for repair.

Restrained push-on joints, mechanical joints utilizing set-screw retainer glands or metal harness of tie rods or clamps may be used instead of concrete blocking. Tie rods, clamps, or other components of dissimilar metal shall be protected against corrosion by hand application of a bituminous coating or by encasement of the entire assembly with 8-mil thick, loose polyethylene film.

H. **Pressure Pipe Identification.** Since installed pressure sewer pipe could be confused with potable water mains, the pressure sewer line shall be identified by laying a solid copper wire #12 attached to the pipe and a plastic flagging tape in the trench approximately one foot above the pipe for the entire length of the pressure line. The tape shall be a minimum of three inches wide and marked "SEWER" at least every three feet. Other methods of identification submitted by the Contractor will be considered for approval by the Engineer.

I. **Tracer Wire.** All gravity sanitary sewer mains and laterals, and pressure sewer pipe shall be installed with a tracer wire attached. For open trench installation, the tracer wire shall be green coated, 12 gauge AWG-THHN solid copper, insulation thickness 0.030", and be approved for direct bury purposes. For directional bore purposes, the tracer wire shall be green coated, 12 gauge copper clad steel with HDPE, insulation thickness of 0.045", and be approved for direct bury purposes. In both cases, the wire shall be installed with as few splices as possible and be installed the entire length of the sewer. Splices shall utilize splice kits as approved on the APL with no bare wire exposed. Splices shall be sealed with silicone sealant, aqua seal, or equivalent, and covered with electrical tape. The two ends of the wire shall be knotted to prevent strain on the splice. Branch connections shall be made without cutting the main wire utilizing a connection clip and sealing the joint the same as the splices.

The wire shall be securely attached to the pipe to retain its position during backfill. The wire shall be taped to the pipe in at least two locations on each stick of pipe, or generally at 6 foot spacing. The wire shall be run up the outside of all manholes and be tucked under the frame and pulled up to the underside of the lid. The wire shall be run inside all air release valve vaults, and shall continue through the vault. A minimum of 5 feet of wire should be neatly coiled inside the vault.

3004.2 Service Connections and Risers. If shown on the Plans, wye branches for house services shall be provided in the gravity sewer mains. The wye branches shall have a minimum internal diameter of four inches and shall be of the same material class, and quality as specified for the gravity sewer pipe. In street Rights-of-Way, all wye branches shall be extended to a point beyond the Right-of-Way line.

The Contractor shall maintain an accurate record for submittal to the Engineer of location, size, and direction of each wye and insertable fitting and the elevation, location, size, and length of each service line. Locations shall use the pipeline stationing as shown on the Plans and shall be documented prior to backfilling. No payment shall be made to the Contractor for wye branches that have no recorded location.

3004.3 Stream and Ditch Crossing. Stream or ditch crossings with less than 3 feet of cover shall be concrete encased or as approved by the Engineer. Aggregate shall be used to backfill the trench.

Crossing Beneath Stream Channel. The top of pipe entering or crossing streams or ditches shall be at sufficient depth below the natural bottom of the stream bed to protect the sewer pipe. In general, the following cover requirements shall be met: one foot of cover shall be required where the sewer pipe is located in rock; a minimum of three feet of cover shall be required in other material; in major streams, more than three feet will be required and the depth shall be shown in the Plans; in paved stream channels, the top of the pipe shall be placed a minimum of one foot below the bottom of the channel pavement.

Whenever deemed necessary, the Contractor will be required to pave around stream crossings, etc., to protect the installation where erosion is anticipated. This paving shall consist of rip rap stone of good quality that will not disintegrate under the action of air or water, and shall be in pieces as nearly cubical in form as practical. No pieces shall be less than twenty pounds, nor more than 150 pounds in weight. The Contractor may substitute precast concrete blocks for stone, with the approval of the Engineer as to the size and quality of concrete to be used. Payment for rip rap paving shall be made at the unit price bid for this item, which price shall include all labor, material, and equipment required to do the necessary grading and furnishing the completed paving in place.

Manholes and other structures shall be located so they do not interfere with the free discharge of flood flows of the stream or ditch.

Cleanup, grading, seeding, planting, or restoration of all work areas in streams or ditches shall begin immediately upon completion of the crossing. Exposed areas shall not remain unprotected for more than seven days.

Aerial Crossings shall not be allowed except as may be approved by the Engineer. If an aerial crossing is approved by the Engineer, the aerial crossing shall conform to the *Missouri Department of Natural Resources Clean Water Commission Design Guides,* latest edition.

3004.4 Highway and Railroad Crossings. Any work done on state highway or railroad right-of-way shall be done in accordance with the appropriate permit issued by the Missouri Department of Transportation (MoDOT) or railroad authority. The Contractor shall be responsible to MoDOT or railroad authority, as well as to the City, for any work done on state or railroad right-of-way. The City shall in no way assume any responsibility or liability for complying with the permit(s).

3004.5 Manholes. Manholes shall be installed as shown on the Plans and constructed as shown on the Standard Drawings.

A. Precast Manholes. The precast manhole sections shall conform to ASTM C478 and be assembled to the required height. Where precast sections are jointed together, mastic sealant or watertight flexible gasket conforming to ASTM C923 shall be utilized on the contact area of the sections to establish an effective watertight joint. This shall be in addition to any concrete grouting or other methods employed in making the joint. See the APL for approved mastic sealants and rubber gaskets. All manhole joints shall be wrapped with an external joint seal. See APL for approved manufacturers.

B. Cast In Place Manholes. See the Standard Drawings.

C. Pipe Connections. Pipes should generally connect to existing structures and pipelines as indicated on the Plans.

Pipe openings shall preferably be cast in the manhole sections; however, pipe openings may be cut or broken on the job provided care is used. The joint between the sewer pipe and the manhole section shall be filled with non-shrink grout and asphalt waterproofing shall be applied to the exterior of the grouted joint to form a permanent watertight seal.

Where the pipe connects to the manhole wall, the connection shall be made with a product manufactured for the purpose as shown on the APL, unless otherwise approved by the Engineer.

To tie a sewer main into an existing manhole, prepare the structure by making an opening with the manufacturer's recommended clearance all around the fitting to be inserted. The manhole shall be core drilled and a watertight flexible gasket shall be installed in such a manner that a watertight condition will result. See the APL for approved gaskets.

To place a manhole on an existing sewer main, the Contractor shall cut the existing sewer main, set a precast base onto a 6 inch (minimum) aggregate layer, and insert sewer pipe through the manhole to connect the existing ends of the sewer main. The ends may be connected to the existing sewer through the use of rigid couplings if bells are not available. The inverts may be formed using concrete as specified in Division 600 of these Specifications.

D. Inverts. An invert in each manhole bottom shall be constructed to accommodate the inflowing and outflowing sewers with full pipe size flow channels carefully and smoothly shaped and finished to prevent sewage splashing and turbulence. All changes of flow directions within manholes shall be made with the maximum practical radius curves. A bench shall be provided on each side of any manhole channel when the pipe diameter(s) are less than the manhole diameter. The bench should be sloped no less than one inch per foot (1.0 in/ft). No pipe shall discharge onto the surface of the bench.

E. Elevation and Covers. The tops of the manholes shall be set as follows, unless otherwise indicated on the Plans or directed by the Engineer:

In streets, roads, highways, driveways, or other paved areas: flush with finished paving elevation and cross slopes.

Undeveloped areas, such as fields, woods, etc.: eighteen inches above ground.

Other areas, such as lawns, playgrounds, etc.: seven inches above ground.

Watertight manhole lids shall be used whenever the manhole top may by flooded by street runoff or high water. Bolt-down cover assemblies may be needed on manholes subject to displacement by sewer surcharging. Locked manhole lids may be desirable in certain locations. Manhole lids shall be as shown in the APL.

F. Drops. Where the difference in elevation between the incoming sewer and the manhole invert is less than twenty-four inches, a drop pipe shall not be used, but the invert shall be filleted with concrete to form a flow channel and prevent solid buildup.

Where the drop exceeds twenty-four inches, a drop manhole as shown on Standard Drawings shall be constructed. The drop pipe shall be constructed of the same size pipe as the sewer line being dropped.

When using precast manholes, drop connections must not enter the manhole at a joint.

Where force mains enter manholes and for any manhole with an entering drop greater than two feet shall be coated with H_2S resistant coating as shown in the APL.

SECTION 3005 – TESTING OF SEWERS

3005.1 General. All gravity sewer mains and manholes shall be tested upon completion of installation. Testing of the sewers and manholes shall be incidental to the project and no direct pay will be granted. Equipment for performing the tests and making the measurements shall be furnished by the Contractor, unless otherwise specified. Sections of the sewer which fail to pass the tests shall have the defects located and repaired or replaced and then be retested until within the specified allowance.

3005.2 Cleaning – Gravity Sewers. Prior to testing, the Contractor shall clean and inspect all sewer lines for major defects. Pre-cleaning by an appropriately sized sewer cleaning ball or by high velocity jet or other methods may be necessary.

3005.3 Visual and TV Tests. All sewer lines shall be inspected visually to verify accuracy of alignment and freedom from debris and obstructions. The full diameter of the pipe shall be visible when viewed between consecutive manholes. The method of test by the Engineer shall be by visually lamping with mirrors and lights or TVing. New mains shall be videoed via TV by the Engineer prior to acceptance of the sewer into the City system.

3005.4 Leakage Test – Gravity Sewers. The Contractor shall perform low air pressure tests on all complete gravity mains, in accordance with the following ATSM procedures, the latest revision thereof, in the presence of the Engineer, to demonstrate that the lines are free of leaks.

Pipe Material	Air Test ASTM Requirement
Concrete ≤ 24 inches	ASTM C924
Concrete ≥ 27 inches	ASTM C1103
Plastic, Composite, Ductile Iron	ASTM F1417

The air testing equipment used shall meet the following minimum requirements:

- Pneumatic plugs shall have a sealing length equal to or greater than the diameter of the pipe to be inspected.
- Pneumatic plugs shall resist internal test pressures without requiring external bracing or blocking.
- All air used shall pass through a single control panel.
- Three individual hoses shall be used for the following connections:
    - From control panel to pneumatic plugs for inflation.
    - From control panel to sealed line for introducing the low pressure air
    - From sealed line to control panel for continually monitoring the air pressure rise in the sealed line.

All pneumatic plugs shall be seal tested before being used in the actual test installation. One length of pipe shall be laid on the ground and sealed at both ends with the pneumatic plugs to be checked. Air shall be introduced into the plugs to 25 psi. The sealed pipe shall be pressurized to 5 psi. The plugs shall hold against this pressure without bracing and without movement of the plugs out of the pipe.

After the manhole to manhole reach of pipe has been backfilled and cleaned and the pneumatic plugs are checked by the above procedure, the plugs shall be placed in the line at each manhole and inflated to 25 psi. Low pressure air shall be introduced into this sealed line until the internal air pressure reaches 4 psi. At least two minutes shall be allowed for the air pressure to stabilize.

After the stabilization period (3.5 psi minimum pressure in the pipe), the air hose from the control panel to the air supply shall be disconnected. That portion of the line being tested shall be termed "Acceptable" if the time required in minutes for the pressure to decrease from 3.5 to 3.0 psi (greater than the average back pressure of any ground water that may be over the pipe) shall not be less than the ASTM Requirements listed above. If the installation fails to meet the ASTM requirements, the Contractor shall, at his own expense, determine the source of leakage. He shall then repair or replace all defective materials and/or workmanship.

3005.5 Vacuum Testing of Manholes. Each manhole shall successfully pass a vacuum test, in the presence of the Engineer, before being accepted into the City's system. The vacuum test shall be conducted in accordance with ASTM C1244. The Contractor shall ensure the manholes are clean and properly grouted and supply the materials necessary to perform the vacuum test. The Contractor shall place and inflate pneumatic plugs in all of the connecting pipes to isolate the manhole. Plugs and the ends of pipes

connected by flexible boots shall be blocked to prevent their movement during the vacuum test. Care should be taken to securely brace the pipes and plugs to prevent them from being drawn into the manhole. Stabilize the vacuum at 10 inches of mercury. Once stabilized, the gauge is allowed a maximum of 1 inch of mercury drop during minimum test time as outlined in ASTM C1244.

3005.6 Deflection Test – PVC Gravity Sewers. Deflection tests shall be performed, in the presence of the Engineer, on all PVC gravity sewer pipe. The test shall be performed not less than thirty days after final backfill has been placed. No pipe shall exceed a deflection of 5 percent. Devices for testing shall be properly sized mandrel. If the defection test is performed using a mandrel, they shall have a diameters equal to 95 percent of the inside diameter of the pipe and the test shall be performed without mechanical pulling devices. A mandrel must have nine (9) or more odd number of flutes or points.

3005.7 Force Mains. Testing of force mains shall be in accordance with AWWA C605 for PVC pipe, AWWA C600 for ductile iron pipe, and ASTM F2164 for HDPE pipe.

3005.8 Infiltration. Materials used for sewer joints shall have satisfactory records for preventing infiltration and the entrance of roots.

3005.9 Tracer Wire. After construction is complete and final grading is finished, a continuity test must be performed on the tracer wire. Any breaks in the circuit must be repaired by the Contractor prior to acceptance of the sewer into the City's system.

SECTION 3006 – LIFT STATIONS

3006.1 Scope. This section outlines the type of pumps and electrical controls to be installed at new sewage lift stations and old sewage lift stations to be renovated. In order to properly and orderly maintain the lift stations, the City standardizes the pumps and electrical controls as much as possible. Therefore, any alterations during construction shall be approved by the Engineer.

3006.2 Motors and Pumps. Any electric pump motor to be exposed to the weather or sewer water shall be submersible rated for use in Class 1 Division 2 Hazardous Locations. Submersible pumps shall be used with (2) stainless steel rails per pump (not cables). All lift stations shall include dual pumps at a minimum. A spare pump shall be provided to the City as part of the installation.

Non-Clog Pumps shall be as specified on the APL. Each pump shall be equipped with N impeller. Pumps greater than 5 HP shall be provided with the Hard Iron N Impeller. Pump motors shall be Class H Insulated with minimum 95% fill factor. Pumps shall be provided with dual mechanical tungsten carbide seals. Pumps over 12HP shall be provided with a Stainless Steel Cooling Jacket.

Grinder Pumps shall be as specified on the APL. Each Pump shall equipped a stationary cutter that shall consist of hardened 316 "L" stainless steel and a rotary cutter shall consist of chrome alloyed cast iron. Pump motors shall be Class H Insulated with minimum 95% fill factor. Pumps shall be provided with dual mechanical tungsten carbide seals.

A minimum of one pump per lift station shall be equipped with a mix flush valve that automatically flushes the sump during initial operation of the pump. The system shall consist of the Flush Valve, Impeller and Volute. The operation of the valve shall depend only on the pump flow and pressure. No electrical components or cables are to be used with the valve.

All pumps shall be provided with 3 phase motors. In the event a single phase utility power is proposed, approval from the City prior to design must be obtained. All single phase installations shall utilize a variable frequency drives to convert incoming single phase power to three phase power in order to

operate three phase motors. Single phase motors shall not be accepted. Approved variable frequency drives are listed on the APL.

It is the intent of the City to have matching pumps at as many locations as possible. Please contact the Engineer during the lift station design.

3006.3 Control Panels. The electrical control panel shall control the lift station based on a fiberglass rod level sensing probe. Duplex lift stations shall operate as lead, lag, alternation. Triplex pump stations shall operate as FOFO operation. For Quadraplex pump station operation consult with the Engineer. Primary components of the control panel construction are listed on the APL. For control panel design requirements, contact the Engineer for existing control panel as-built drawings and specifications. The intent of the City is to have matching control panels at each lift station location.

3006.4 Electrical Services. All overhead services shall be secured to a stationary pole. These poles shall meet Ameren UE's requirements. Rigid conduit is to be used for the stack. The entire entrance is to be bonded and grounded, including the EMT covering the ground wire. If it is not possible for the service to be overhead, then rigid conduit (sized according to the gauge of wire and number of conductors) buried at a minimum of thirty-six inches from top of the grade is required. The length of the underground service is not to exceed fifty feet, or as approved by the Engineer.

In the event a single phase utility power is proposed, approval from the Engineer prior to design must be obtained. All single phase installations shall utilize variable frequency drives, as approved on the APL, to convert incoming single phase power to three phase power in order to operate three phase motors

3006.5 Interior Wiring. Rigid conduit is to be used from the lift station control starter panel to the wet well or dry well depending on the location of the pump motors. All wiring which controls the primary level sensing probe and back-up float switch is to be placed in rigid conduit to a point entering the wet well.

All conduit, both motor circuits and lighting circuits, shall be bonded and grounded and shall be properly anchored.

All wire shall be copper, stranded, TW or THW and sized according to the ampere load.

All exposed lightbulbs to have guards; if these guards are metal they shall be bonded and grounded.

The control panel shall contain an interior 110 Volt outlet.

3006.6 Piping. All piping inside lift stations shall be:

Smaller than or equal to 4" diameter: Schedule 80 PVC or Stainless Steel

Greater than 4" diameter: Ductile Iron or Stainless Steel

Suction side – Going into wet well a combination (wye and one-eighth bend) with plug in top shall be used.

Discharge side – On each pump there will be a check valve and a plug valve. The hookup shall all be long sweep fittings.

The station shall have a quick bypass connection in the valve pit on the discharge equipped with a Camlock or Bauer fitting to allow connection of a bypass pump.

All hanging pipe will be properly supported and braced. The Plans shall indicate whether a pumphouse or an open all-weather station is to be constructed.

3006.7 Wet Well. The wet well shall be coated with an approved product as stated in the APL. A wet well shall have a minimum diameter of four feet. A valve pit shall have a drain for water to enter the wet well. A standard manhole shall be set on the incoming side of the wet well.

3006.8 Lift Station Facility Requirements. The lift station shall have an aluminum hatch that opens toward the control panel, in order for an operator to see into the wet well while standing at the panel. It shall have an exterior floodlight controlled by a switch in the panel. Light shall be positioned to shine into or toward the hatch. The lift station shall have a below grade hose bib or a freeze proof hose bib.

The lift station will be enclosed by a 6 foot tall chain link fence. The area enclosed by the fence shall be a concrete surface and provide adequate room for maintenance purposes. The lift station shall have a paved or gravel drive for access. The drive shall be a minimum of twelve feet in width and twenty-five feet in length. A separate parking area may be provided.

3006.9 SCADA Requirements. Complete integration of the lift station into the City SCADA system shall be provided. In addition to the control panel SCADA components, all programming of the central SCADA system shall be provided in order to fully integrate a new lift station into the City SCADA system.

Items required for each pump station for SCADA integration are:

A. One multismart controller
B. One Ethernet cable
C. One radio – applies only to locations requiring radio communication.
D. One Ethernet switch
E. One power supply
F. One UPS
G. One lightning arrestor
H. Antenna cable (where applicable), length will vary with application
I. Cable ends and connectors as necessary for connection of antenna to radio
J. VHF antenna (where applicable) with gain for most applications, depends on location
K. Antenna mast (where applicable). Length and construction will depend on location; may be a standard tower or a conduit style mast. Consult with Engineer for path study results.
L. Programming modification to the SCADA central terminal units shall be included.

For additional details pertaining to the SCADA components and programming required at each lift station and central terminal unit, contact the Engineer.

3006.10 Portable Generator Connections. All components shall be as listed on the APL.

SECTION 3007 – PAYMENT

3007.1 Pipe. Payment for Pipe shall be made at the contract unit price and shall include the cost of all materials, labor, equipment, installation, relocation, and maintenance, and all else necessary to provide a complete and functional project as outlined on the Plans and as specified in these Specifications. If no pay item for Pipe is included in the contract, it shall be considered incidental to the work and no direct payment will be made.

3007.2 Valves. Payment for Valves shall be made at the contract unit price and shall include the cost of all

materials, labor, equipment, installation, relocation, and maintenance, and all else necessary to provide a complete and functional project as outlined on the Plans and as specified in these Specifications. If no pay item for Valve is included in the contract, it shall be considered incidental to the work and no direct payment will be made.

3007.3 Manholes. Payment for Manholes shall be made at the contract unit price and shall include the cost of all materials, labor, equipment, installation, relocation, and maintenance, and all else necessary to provide a complete and functional project as outlined on the Plans and as specified in these Specifications. If no pay item for Manhole is included in the contract, it shall be considered incidental to the work and no direct payment will be made.

3007.4 Lift Stations. Payment for Lift Stations shall be made at the contract unit price and shall include the cost of all materials, labor, equipment, installation, relocation, and maintenance, and all else necessary to provide a complete and functional project as outlined on the Plans and as specified in these Specifications. If no pay item for Lift Station is included in the contract, it shall be considered incidental to the work and no direct payment will be made.

CITY of CAPE GIRARDEAU

ENGINEERING DIVISION
Cape Girardeau, Missouri

STANDARD DRAWINGS

City of Cape Girardeau
401 Independence
Cape Girardeau, MO 63703

ISSUED February 25, 2016

RECEIVED
FEB 29 2016
Water Protection Program

PAGES 1 – 45

TABLE OF CONTENTS

EROSION AND SEDIMENT CONTROL
CONCRETE WASHOUT — 1
CONSTRUCTION ENTRANCE — 2
INLET PROTECTION – CURB INLET DIVERSION — 3
INLET PROTECTION – CURB INLET WITH WATTLE — 4
INLET PROTECTION – AREA INLET — 5
INLET PROTECTION – INLET AT SAG POINT — 6
INLET PROTECTION – INLET ON GRADE — 7
ROCK DITCH CHECKS — 8
SILT FENCE AND J-HOOKS — 9
INFILTRATION TRENCH — 10

STREETS
STREET STANDARDS AND ALLEY TYPICAL SECTIONS — 11
LOCAL STREET TYPICAL SECTIONS — 12
COLLECTOR STREET TYPICAL SECTIONS — 13
ARTERIAL STREET TYPICAL SECTIONS — 14
JOINT LAYOUT DETAILS FOR CONCRETE PAVEMENT — 15
JOINT DETAILS – PORTLAND CEMENT CONCRETE PAVEMENT STREETS — 16
CURB AND GUTTER — 17

PAVEMENT REPAIR
FLEXIBLE PAVEMENT REPAIR — 18
CONCRETE PAVEMENT REPAIR — 19

DRIVEWAYS AND SIDEWALKS
DRIVEWAY STANDARDS — 20
COMMERCIAL DRIVEWAY WITH GREEN AREA (CURBED OR FLARED) — 21
RESIDENTIAL DRIVEWAY WITH GREEN AREA (RADIUS OR FLARED) — 22
COMMERCIAL OR RESIDENTIAL DRIVEWAY WITHOUT GREEN AREA — 23
DRIVEWAY WITH 4" LIP CURB — 24
SIDEWALK CROSS SECTION AND PROFILE — 25
PARALLEL CURB RAMPS WITH SIDEWALK AT BACK OF CURB — 26
PARALLEL CURB RAMPS — 27
PERPENDICULAR CURB RAMPS — 28

BIKE LANES
BICYCLE LANE STRIPING — 29
SHARED USE ARROW (SHARROW) — 30

STORM SEWERS
STORMWATER JUNCTION BOX — 31
AREA INLET – WEIR OPENING — 32
INLET DETAIL WITH 4" LIP CURB — 33

WATER MAINS

HORIZONTAL THRUST BLOCK DIMENSIONS ---------- *34*
HORIZONTAL BEND AND THRUST BLOCK ---------- *35*
MAXIMUM JOINT DEFLECTION – C900 PVC AND DIP ---------- *36*
MINIMUM BENDING RADIUS FOR POLYETHYLENE WATER PIPE ---------- *37*
FIRE HYDRANT CONNECTION ---------- *38*
STANDARD STRADDLE BLOCK ---------- *39*

SANITARY SEWERS

PIPE BEDDING – SEWER, PRESSURE, AND RIGID PIPE ---------- *40*
STANDARD SANITARY MANHOLE WITH FRAME AND LID ---------- *41*
DROP MANHOLE ---------- *42*
DOGHOUSE MANHOLE ---------- *43*
PIPE CROSSING AND CONTINUOUS ENCASEMENT ---------- *44*
SANITARY SEWER BORE ---------- *45*

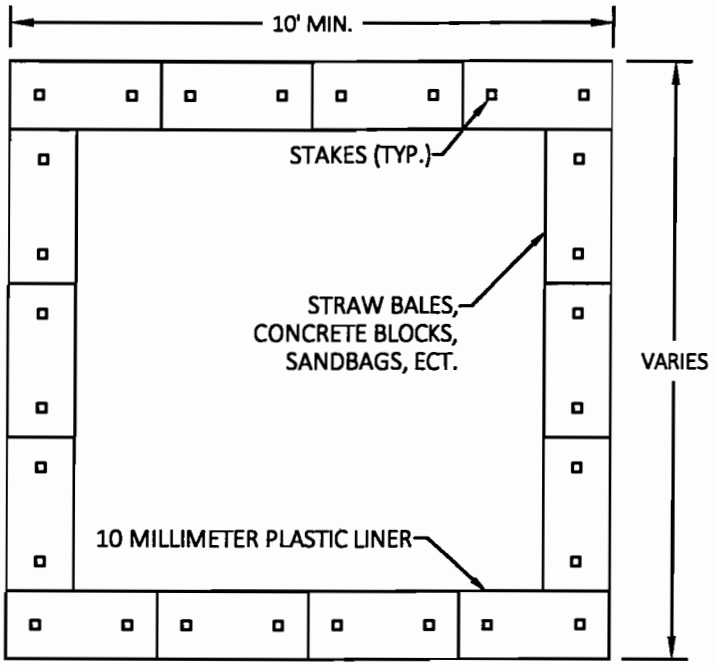

PLAN

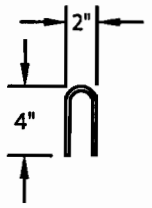

STAPLE DETAIL

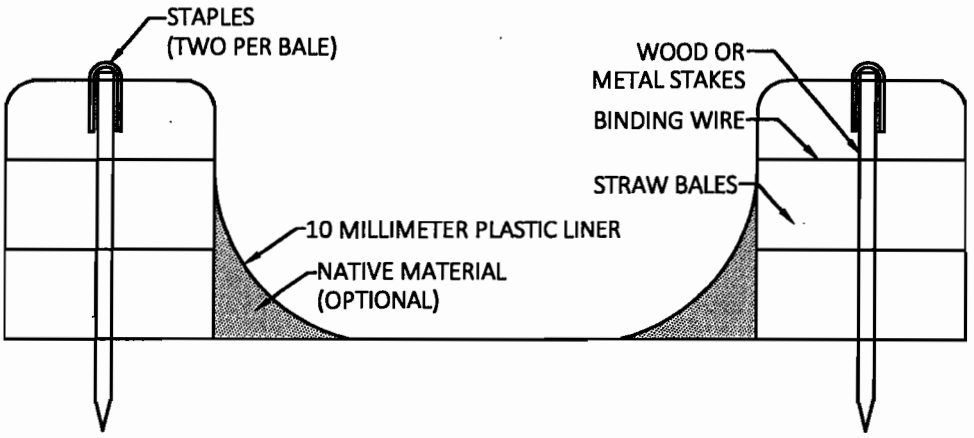

SECTION

Notes:

1. All work shall be done in accordance with the latest edition of the City of Cape Girardeau Standard Specifications.
2. Actual layout determined in field as necessary to accommodate anticipated number of washout.
3. Contractor shall be responsible for washout removal once washout operation have ceased.

STATE OF MISSOURI
CASEY L. BRUNKE
NUMBER
PE-2010018549
PROFESSIONAL ENGINEER
02-25-16

Concrete Washout

Prepared By: JH	Scale: NTS	Revisions:	CITY of CAPE GIRARDEAU DEVELOPMENT SERVICES City Standard Details
Checked By: TR - DW - JL			
Date: 02-25-2016	Page 1		

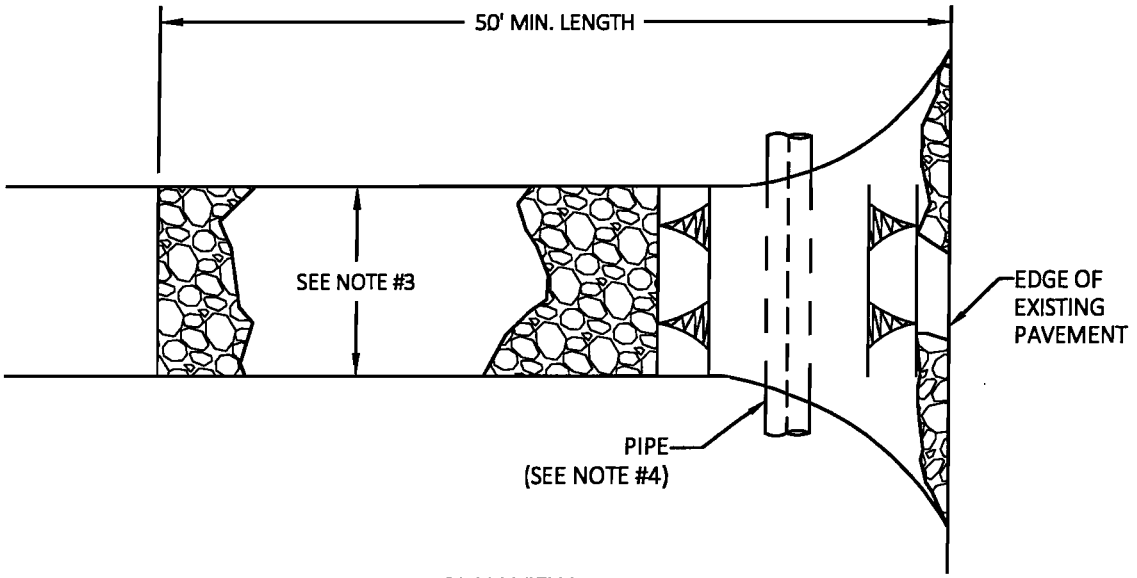

PLAN VIEW

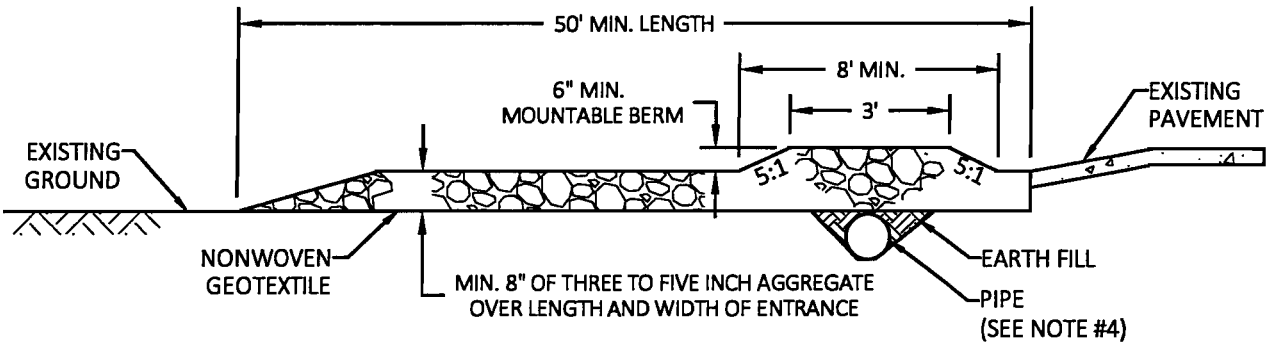

PROFILE

Notes:

1. All work shall be done in accordance with the latest edition of the City of Cape Girardeau Standard Specifications.
2. Place construction entrance in accordance with the approved plan. Vehicles must travel over the entire length of the construction entrance. Use minimum length of 50 feet. Flare construction entrance ten feet minimum at each side of the existing road to provide a turning radius.
3. Width: Not less than full width of all points of ingress/egress.
4. Pipe all surface water flowing to or diverted toward the construction entrance under the entrance, maintaining positive drainage. Protect pipe installed through the construction entrance with a mountable berm with 5:1 slopes and a minimum of 12 inches of stone over the pipe. Provide pipe as specified on approved plan. When the construction entrance is located at a high spot and has no drainage to convey, a pipe is not necessary. A mountable berm is required where necessary to prevent runoff from flowing into street and/or to provide additional cover to protect pipe.
5. Stone Size: As required to be effective but not less than three to five inch minimum open graded rock.
6. Prepare subgrade and place nonwoven geotextile over the entire area prior to placing of stone.
7. Maintain entrance in a condition that minimizes tracking of sediment. Add stone or make other repairs as conditions demand to maintain clean surface, mountable berm, and specified dimensions. Immediately remove stone and/or sediment spilled, dropped, or tracked onto adjacent roadway by vacuuming, scraping, and/or sweeping.
8. Washing roadway to remove mud tracked onto pavement is not acceptable unless wash water is directed to an approved sediment control practice.
9. Maintenance: The entrance shall be maintained in a condition that will prevent tracking or flowing of sediment onto Public Right-of-Way. This may require periodic top dressing with additional stone as conditions demand, as well as repair and clean out of any associated sediment removal devices. All sediment that is spilled, dropped, washed or tracked onto Public Right-of-Way must be removed immediately. Periodic inspections and maintenance shall be provided after each rain.

STATE OF MISSOURI
CASEY L. BRUNKE
NUMBER
PE-2010018549
PROFESSIONAL ENGINEER
02-25-16

Construction Entrance

Prepared By: JH	Scale: NTS	Revisions:	CITY of CAPE GIRARDEAU DEVELOPMENT SERVICES City Standard Details
Checked By: TR - DW - JL			
Date: 02-25-2016	Page 2		

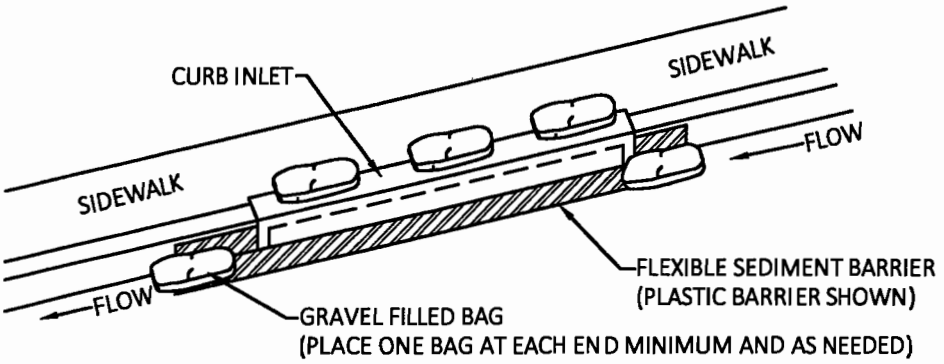

PERSPECTIVE

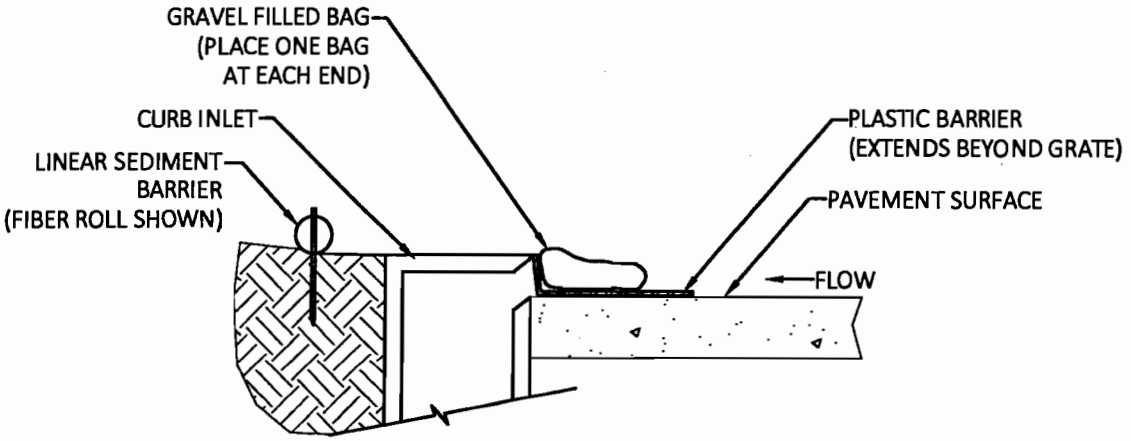

SECTION

Notes:

1. All work shall be done in accordance with the latest edition of the City of Cape Girardeau Standard Specifications.
2. Inlet diversion shall only be used with the approval of the Engineer. Additional Inlet on Grade devices shall be used in conjunction with approved inlet diversions.
3. Inlet Diversion may be used with or without the Linear Sediment Barrier, subject to approval by the Engineer.

STATE OF MISSOURI
CASEY L. BRUNKE
NUMBER
PE-2010018549
PROFESSIONAL ENGINEER
02-25-16

Inlet Protection - Curb Inlet Diversion

Prepared By: JH	Scale: NTS	Revisions:	CITY of CAPE GIRARDEAU DEVELOPMENT SERVICES City Standard Details
Checked By: TR - DW - JL			
Date: 02-25-2016	Page 3		

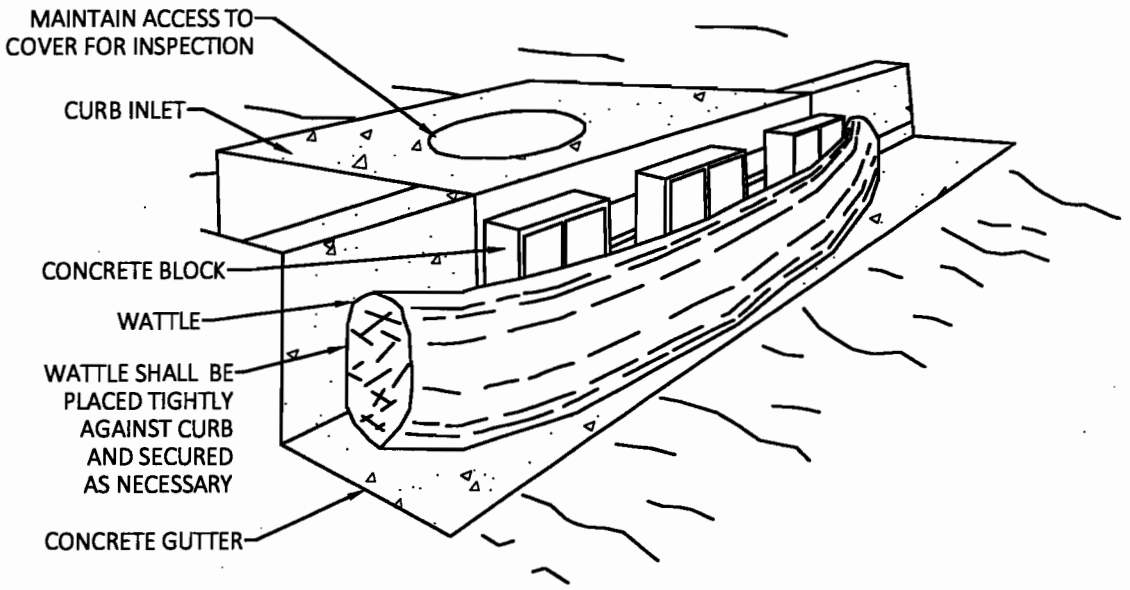

PERSPECTIVE

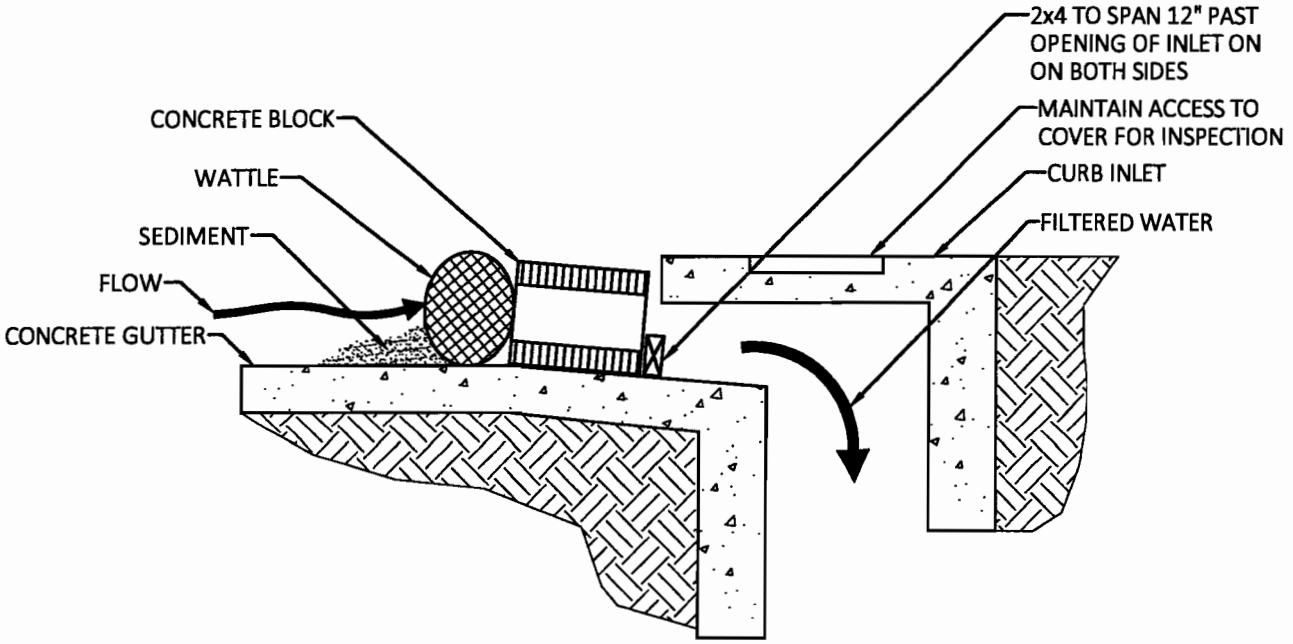

SECTION

Notes:

1. All work shall be done in accordance with the latest edition of the City of Cape Girardeau Standard Specifications.
2. This method of Inlet Protection is applicable at curb inlets where ponding is in front of the structures and unprotected areas.
3. Depending on the opening of the inlet, the concrete block may have to be placed vertically.

STATE OF MISSOURI
CASEY L. BRUNKE
NUMBER
PE-2010018549
PROFESSIONAL ENGINEER
02-25-16

Inlet Protection - Curb Inlet with Wattle

Prepared By: JH	Scale: NTS	Revisions:	CITY of CAPE GIRARDEAU DEVELOPMENT SERVICES City Standard Details
Checked By: TR - DW - JL			
Date: 02-25-2016	Page 4		

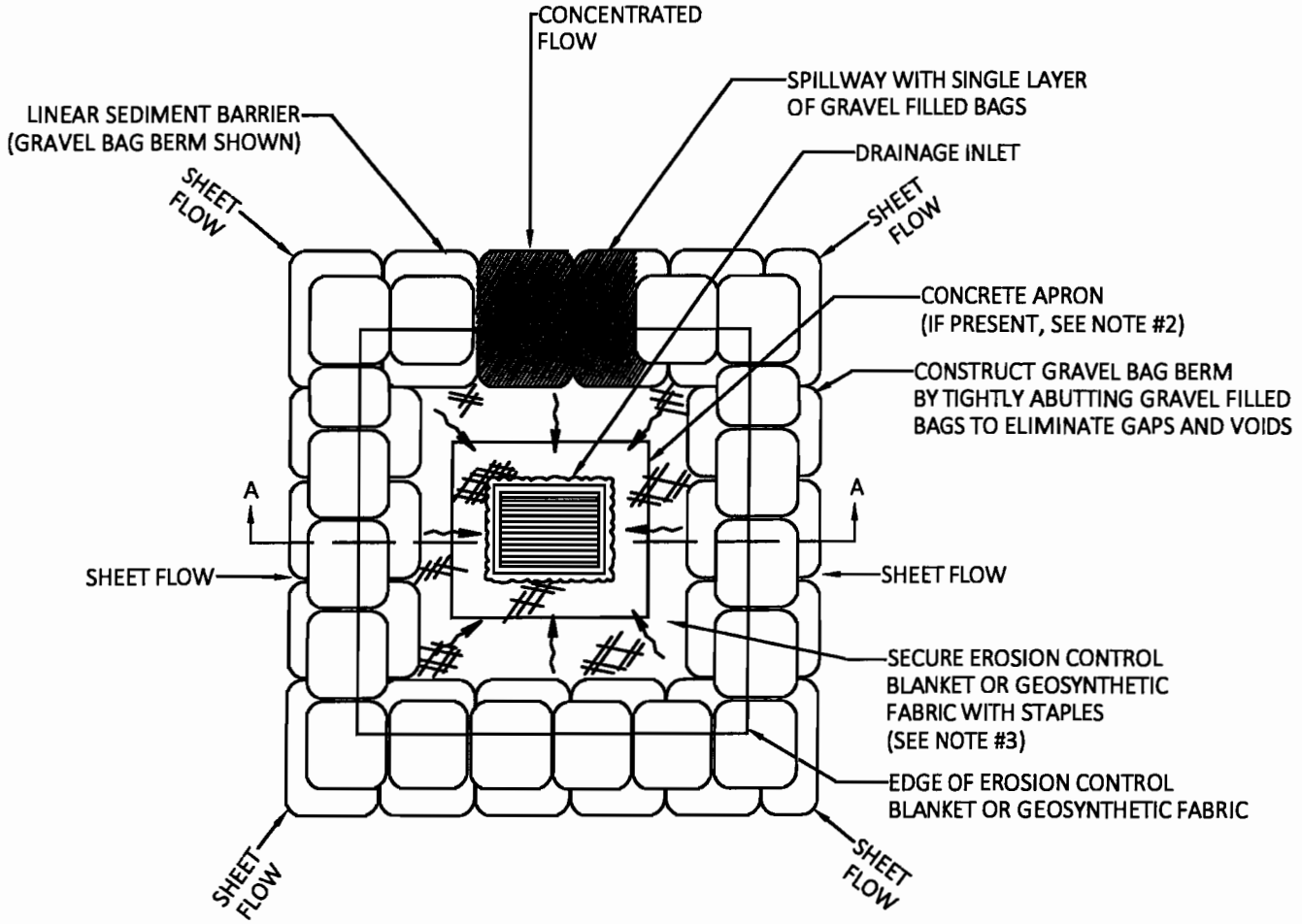

PLAN

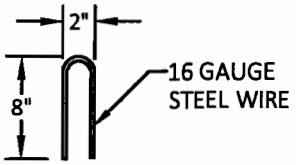

STAPLE DETAIL

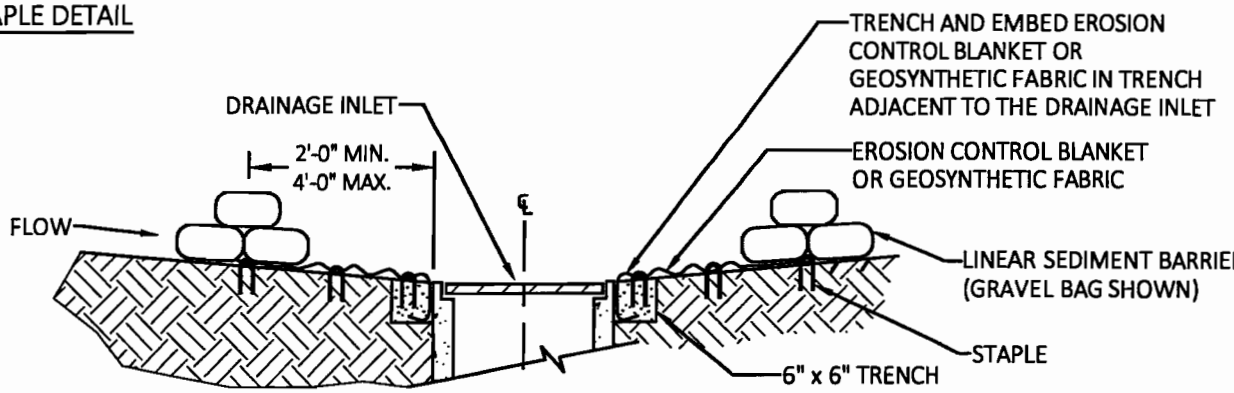

SECTION A-A

Notes:

1. All work shall be done in accordance with the latest edition of the City of Cape Girardeau Standard Specifications.
2. Position erosion control blanket at edge of concrete apron and secure in trench.
3. Erosion control blanket is not required if the area adjacent to the inlet is vegetated or paved.

STATE OF MISSOURI
CASEY BRUNKE
NUMBER
PE-2010018549
PROFESSIONAL ENGINEER

Inlet Protection - Area Inlet

Prepared By: JH	Scale: NTS	Revisions:
Checked By: TR - DW - JL		
Date: 02-25-2016	Page 5	

CITY of CAPE GIRARDEAU
DEVELOPMENT SERVICES
City Standard Details

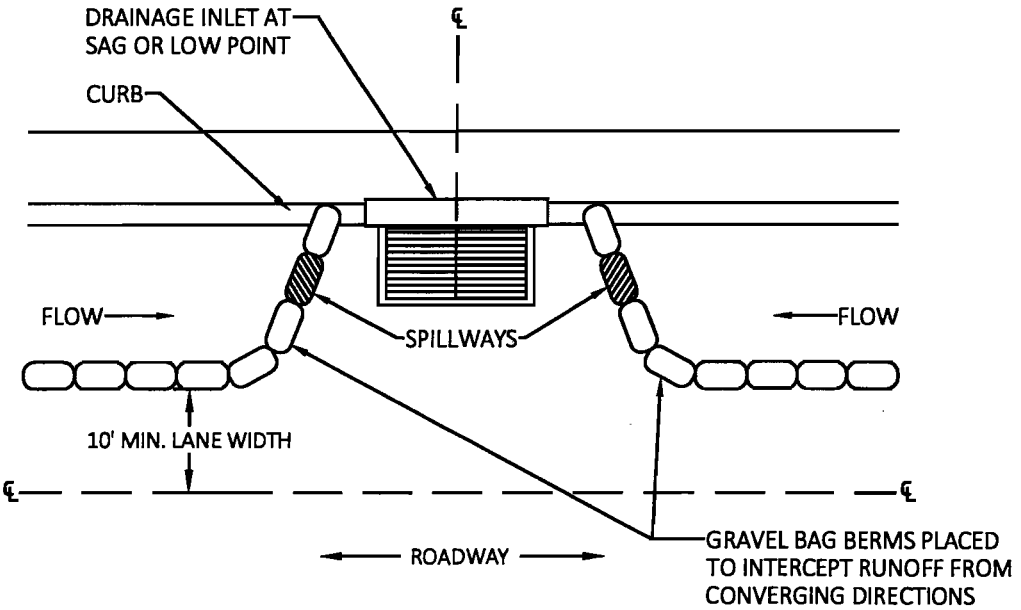

PLAN

Gravel Bag Berm Spacing Table					
Slope or Roadway (Percent) %	1 to 3.9	4 to 5.9	6 to 7.9	8 to 10	10+
Maximum Interval between Berms	100'	75'	50'	25'	12'

FOR SLOPE OF LESS THAN 1% INSTALL BARRIERS IF EROSION/ SEDIMENT IS PRESENT, SUBJECT TO THE APPROVAL OF ENGINEER.

Notes:

1. All work shall be done in accordance with the latest edition of the City of Cape Girardeau Standard Specifications.
2. Place traffic cones adjacent to drainage inlet protection.
3. Dimensions may vary to fit field conditions.
4. Install a minimum of three gravel bag berms upstream of each drainage inlet to be protected.

STATE OF MISSOURI
CASEY L. BRUNKE
NUMBER
PE-2010018549
PROFESSIONAL ENGINEER
02-25-16

Inlet Protection - Inlet at Sag Point

Prepared By: JH	Scale: NTS	Revisions:	CITY of CAPE GIRARDEAU DEVELOPMENT SERVICES City Standard Details
Checked By: TR - DW - JL			
Date: 02-25-2016	Page 6		

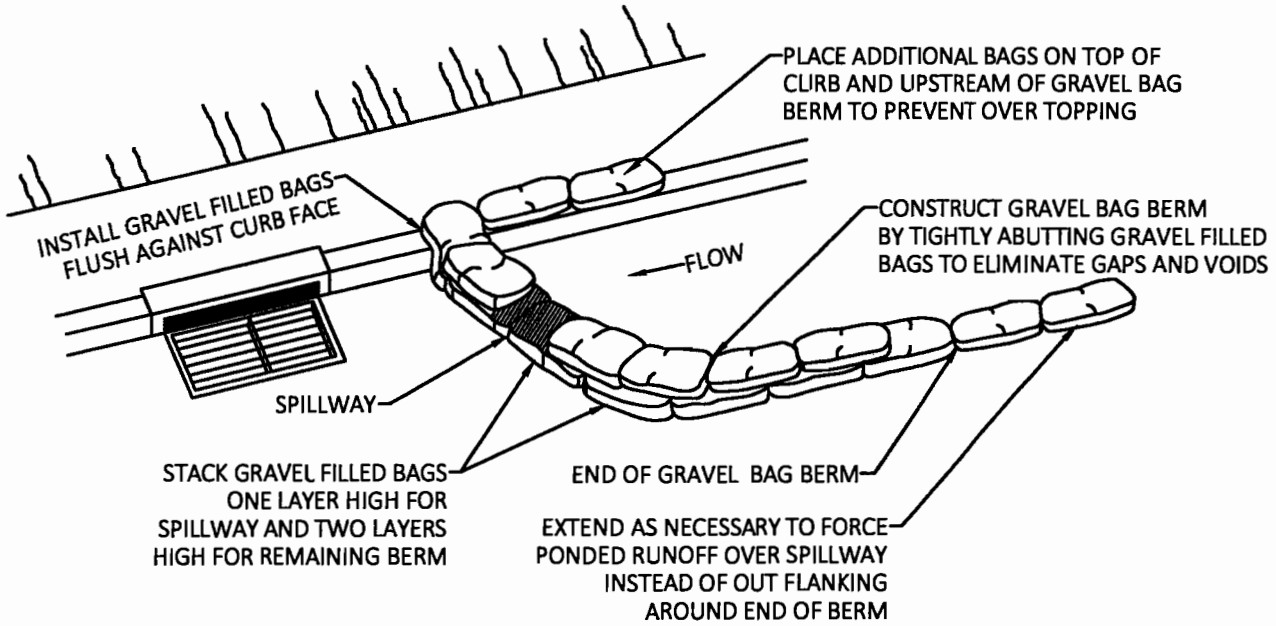

PERSPECTIVE

Gravel Bag Berm Spacing Table					
Slope or Roadway (Percent) %	1 to 3.9	4 to 5.9	6 to 7.9	8 to 10	10+
Maximum Interval between Berms	100'	75'	50'	25'	12'

FOR SLOPE OF LESS THAN 1% INSTALL BARRIERS IF EROSION/ SEDIMENT IS PRESENT, SUBJECT TO THE APPROVAL OF ENGINEER.

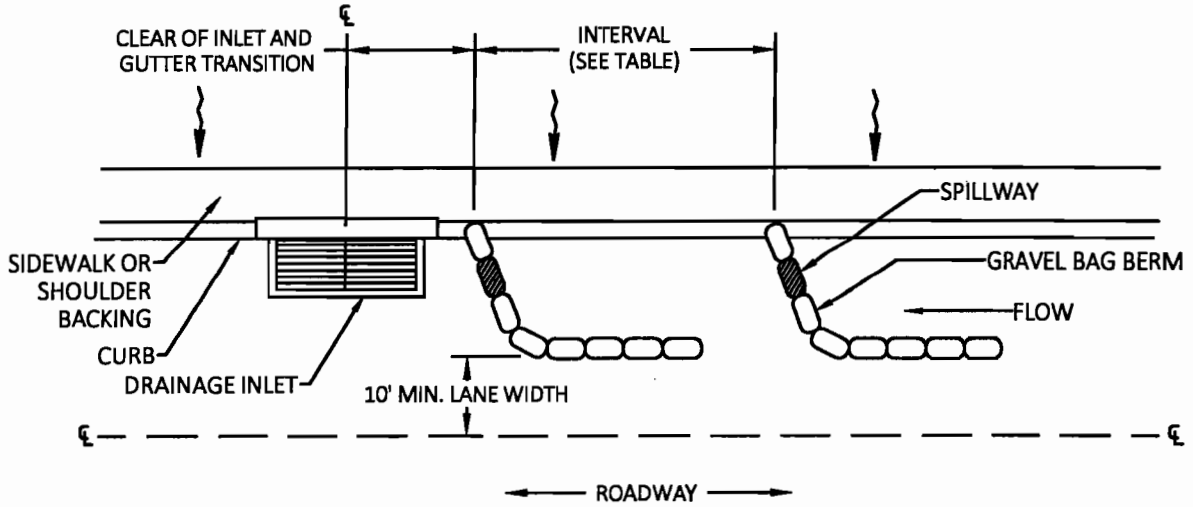

PLAN

Notes:

1. All work shall be done in accordance with the latest edition of the City of Cape Girardeau Standard Specifications.
2. Place traffic cones adjacent to drainage inlet protection.
3. Dimensions may vary to fit conditions.
4. Install a minimum of three gravel bag berms upstream of each drainage inlet to be protected.

STATE OF MISSOURI
CASEY L. BRUNE
NUMBER
PE-2010018549
PROFESSIONAL ENGINEER
02-25-16

Inlet Protection - Inlet on Grade

Prepared By: JH	Scale: NTS	Revisions:	CITY of CAPE GIRARDEAU DEVELOPMENT SERVICES City Standard Details
Checked By: TR - DW - JL			
Date: 02-25-2016	Page 7		

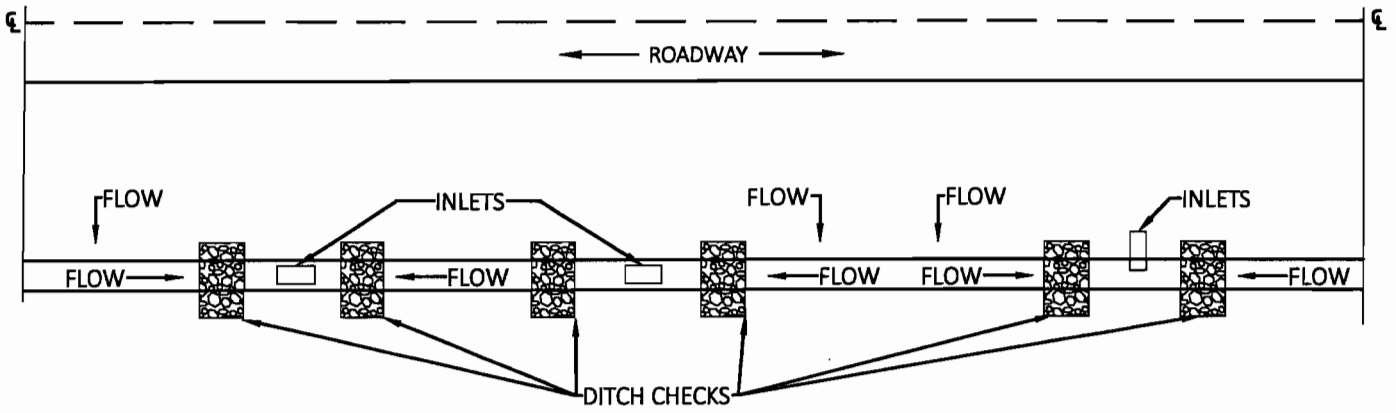

AREA INLET DITCH CHECK

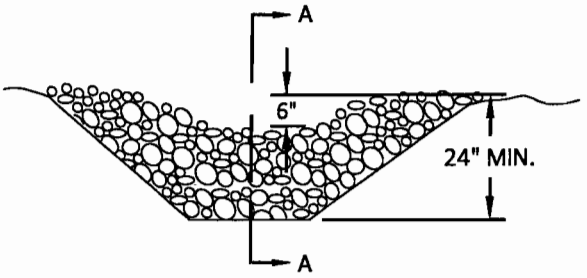

END VIEW

SECTION A-A

DITCH CHECK

Example Ditch Check Spacing for Standard Heights (FT.)		
Ditch Slope %	Spacing for 24" Height	Spacing for 18" Height
0.5	400	300
1.0	200	150
1.5	133	100
2.0	100	75
2.5	80	60
3.0	66	50
3.5	57	43
4.0	50	38
4.5	44	33
5.0	40	30
5.5	38	27
6.0	35	25
6.5	30	23
7.0	28	21
7.5	26	20
8.0	25	19
8.5	23	18
9.0	22	17
9.5	21	16
10.0	20	15

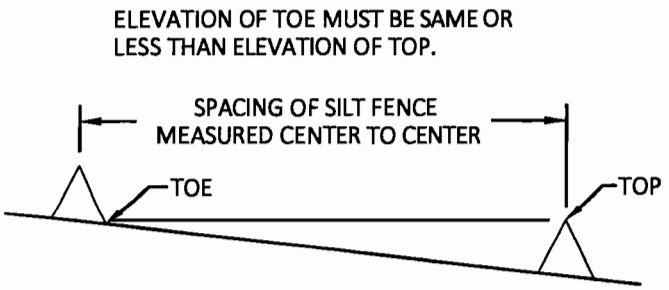

MINIMUM DITCH CHECK SPACING

Notes:

1. All work shall be done in accordance with the latest edition of the City of Cape Girardeau Standard Specifications.
2. Rock Ditch Check shall be removed after vegetation has sufficiently matured to protect the ditch or swales, as determined by the Engineer, or after ditch liner has been placed.
3. Ditch checks located adjacent to area inlets shall provide a minimum of 12 inches and a maximum of 18 inches of height above the inlet grade.
4. The predominate size of rock used shall range between four and 12 inches.

STATE OF MISSOURI
CASEY L. BRUNE
NUMBER
PE-2010018549
PROFESSIONAL ENGINEER
02-25-16

Rock Ditch Checks

Prepared By: JH	Scale: NTS	Revisions:	CITY of CAPE GIRARDEAU DEVELOPMENT SERVICES City Standard Details
Checked By: TR - DW - JL			
Date: 02-25-2016	Page 8		

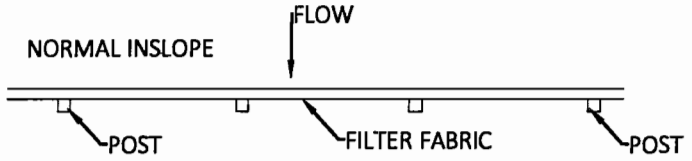

PLAN VIEW

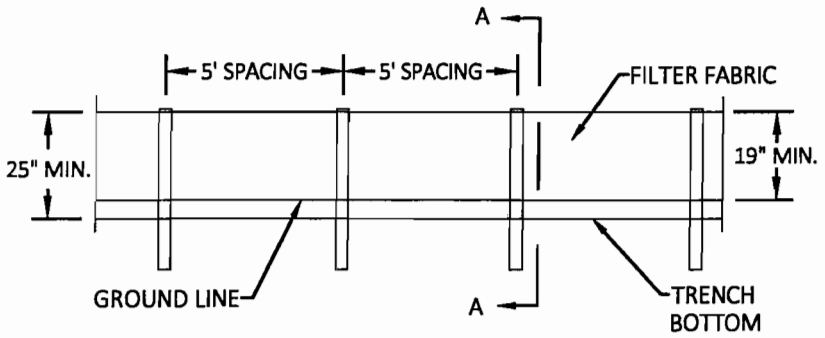

ELEVATION DETAIL

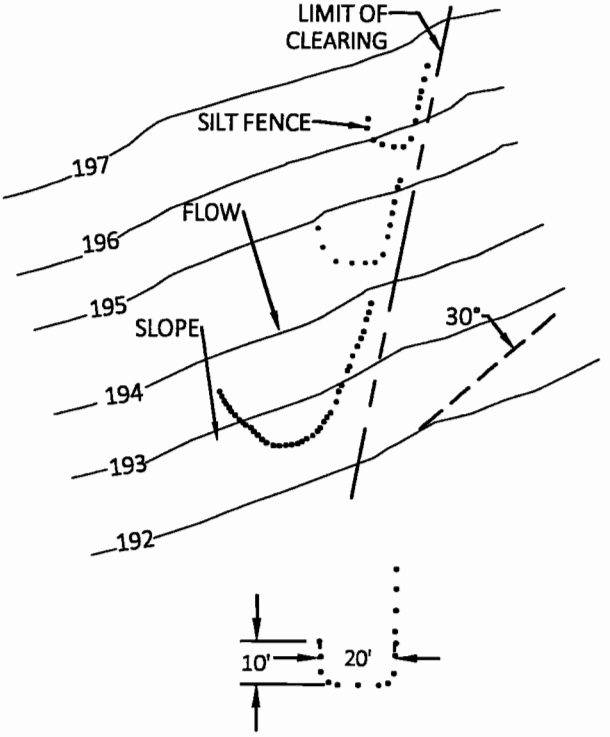

J-HOOK DIMENSIONS (TYP.)

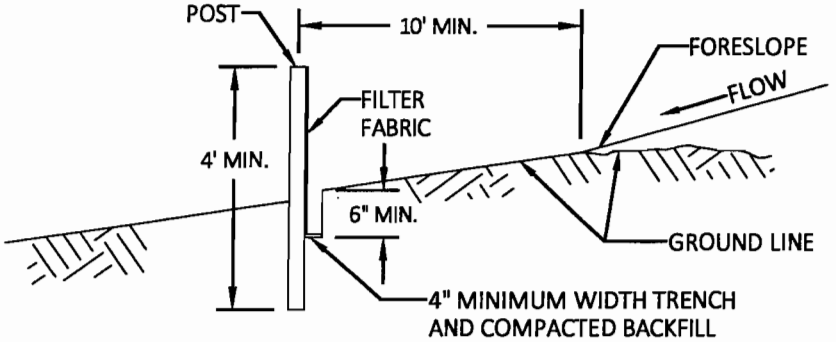

SECTION A-A

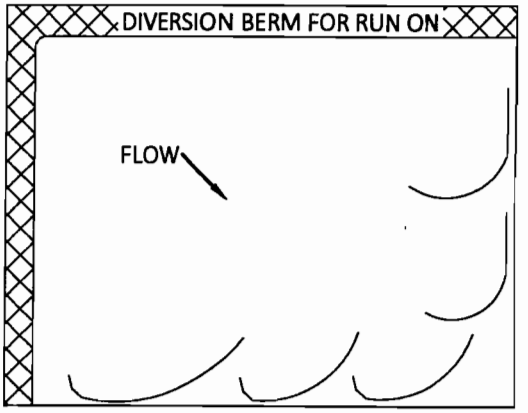

- SILT FENCE PLACEMENT

Notes:

1. All work shall be done in accordance with the latest edition of the City of Cape Girardeau Standard Specifications.
2. On all slopes greater than ten feet high, mid-slope runs of silt fence shall be provided.
3. For fabric silt fence, the minimum longitudinal splice overlap shall be two feet with a post at each end. The fabric shall be secured to posts.
4. Silt fence shall not be used on concentrated flows, across drainage ditches or drains. Instead ditch checks shall be used as shown on plans or as directed by Engineer.
5. One quarter (1/4) acre per 100 feet of fence with maximum length of 600 feet.
6. Drive support stakes to half of their length.
7. J-Hook minimum width of 20 feet with a ten foot length of fence turned uphill as shown, is recommended. Where space is limited narrower hooks may be used with a higher spacing frequency. J-Hooks shall be used when the silt fence is installed at an angle of 30 degrees or greater from parallel to the contours.

STATE OF MISSOURI
CASEY L. BRUNNER
NUMBER
PE-2010018549
PROFESSIONAL ENGINEER
02-25-16

Silt Fence and J-Hooks

Prepared By: JH	Scale: NTS	Revisions:	CITY of CAPE GIRARDEAU DEVELOPMENT SERVICES City Standard Details
Checked By: TR - DW - JL			
Date: 02-25-2016	Page 9		

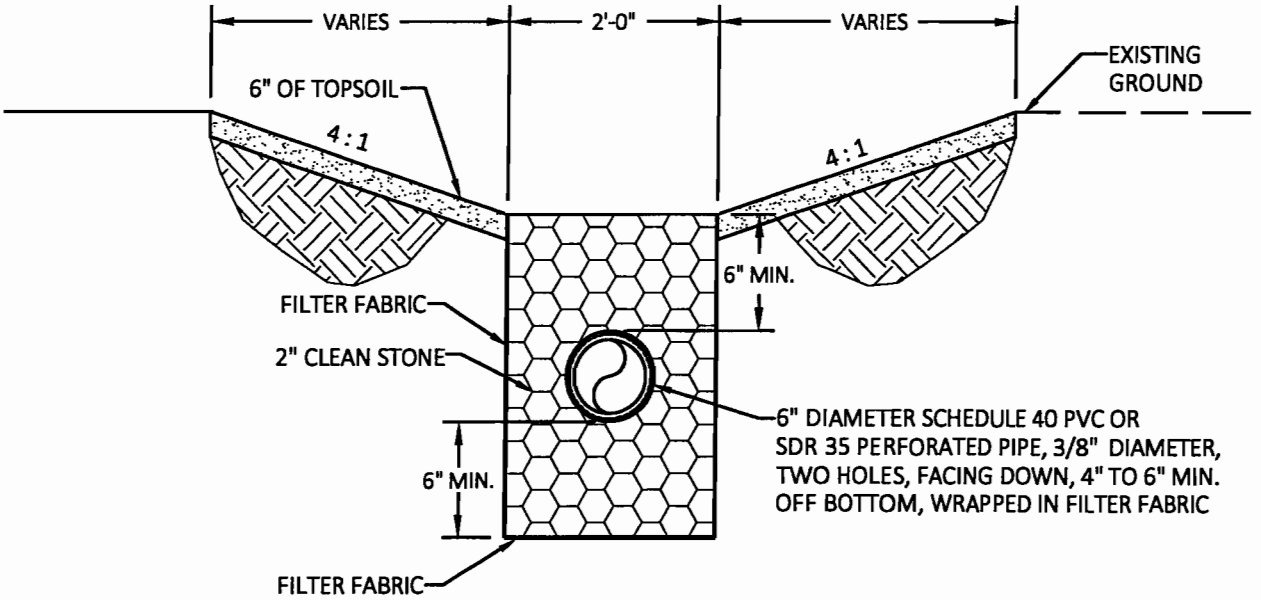

Notes:

All work shall be done in accordance with the latest edition of the City of Cape Girardeau Standard Specifications.

STATE OF MISSOURI
CASEY L. BRUNKE
NUMBER
PE-2010018549
PROFESSIONAL ENGINEER
02-25-16

Infiltration Trench

Prepared By: JH	Scale: NTS	Revisions:	CITY of CAPE GIRARDEAU DEVELOPMENT SERVICES City Standard Details
Checked By: TR - DW - JL			
Date: 02-25-2016	Page 10		

Street Standards Development Type:	Max. Block Length	Max. Cul-De-Sac Length	Max. Loop Street Length
Single Family Lots > 1 Ac.	1000'-0"	800'-0"	3000'-0"
Single Family & Two Family Lots < 1 Ac.	800'-0"	600'-0"	2400'-0"
Multifamily Residential and Townhouses	600'-0"	500'-0"	1800'-0"
Commercial	500'-0"	500'-0"	1500'-0"

Notes:

1. Vertical curves: All changes in grade shall be connected by vertical curves to provide a smooth transition and the required sight distance.
2. Blocks shall have sufficient depth to provide for two tiers of lots of appropriate depth.
3. Refer to the City Code for additional design requirements.

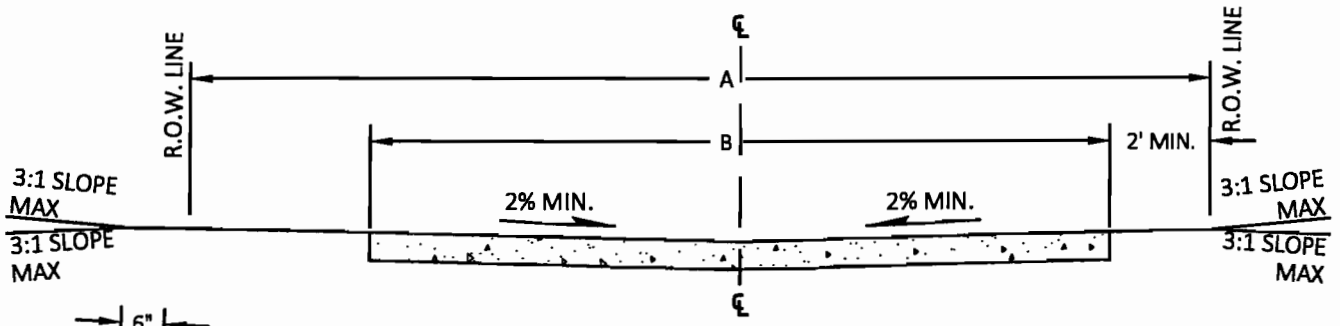

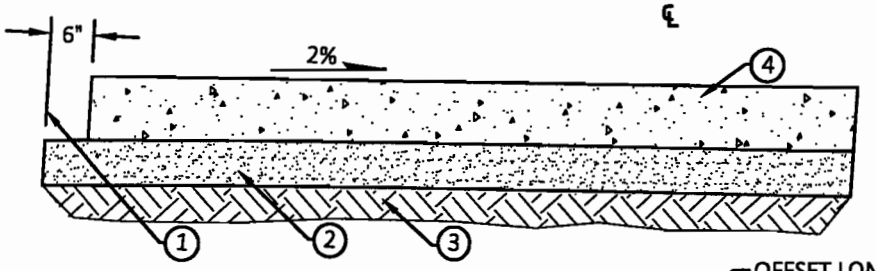

DETAIL - CONCRETE PAVEMENT KEY:

1. 6" Pay Limit of Aggregate Base
2. 4" Type 5 or Type 7 Aggregate
3. Compacted Subgrade
4. 7" Portland Cement Concrete

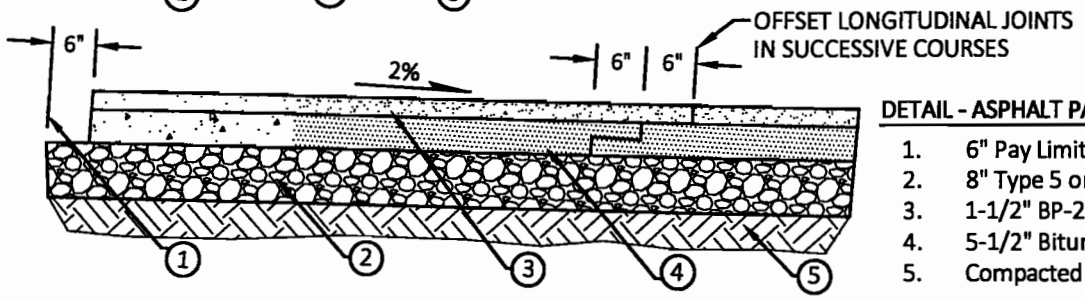

DETAIL - ASPHALT PAVEMENT KEY:

1. 6" Pay Limit for Aggregate Base
2. 8" Type 5 or Type 7 Aggregate
3. 1-1/2" BP-2 Asphalt Pavement
4. 5-1/2" Bituminous Base (Placed in 2 Lifts)
5. Compacted Subgrade

Alley Widths Development Type:	"A" Right-of-Way	"B" Pavement	Maximum Grade (%)
Single Family Lots > 1 Ac.	20'-0"	14'-0"	12
Single Family & Two Family Lots < 1 Ac.	20'-0"	14'-0"	11
Multifamily Residential and Townhouses	20'-0"	14'-0"	10
Commercial	20'-0"	14'-0"	10

Notes:

1. All work shall be done in accordance with the latest edition of the City of Cape Girardeau Standard Specifications.
2. Minimum alley grade shall be 2.0% to 4.0% to insure proper drainage.
3. Refer to Street Standards in City Code for additional requirements.
4. Utility easements of a ten foot width shall be provided on one or both sides of the Right of Way, as directed by the Engineer.
5. If alley pavement abuts a structure, a 1/2" isolation joint shall be between the pavement and the structure.

STATE OF MISSOURI
CASEY L. BRUNKER
NUMBER
PE-2010018549
PROFESSIONAL ENGINEER
07-25-16

Street Standards and Alley Typical Sections

Prepared By: JH	Scale: NTS	Revisions:
Checked By: TR - DW - JL		
Date: 02-25-2016	Page 11	

CITY of CAPE GIRARDEAU
DEVELOPMENT SERVICES
City Standard Details

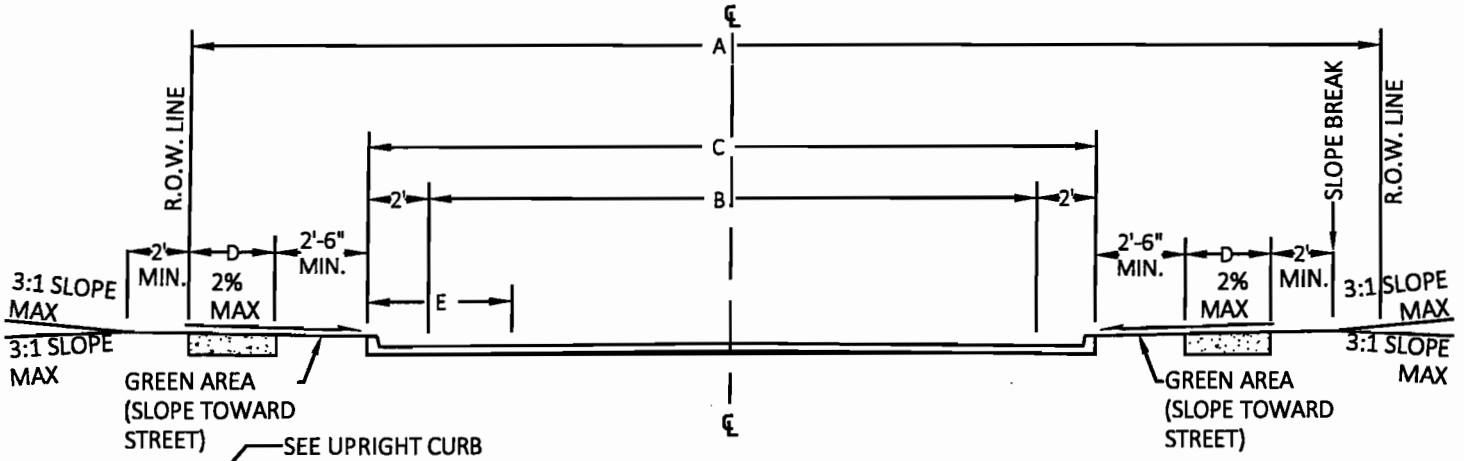

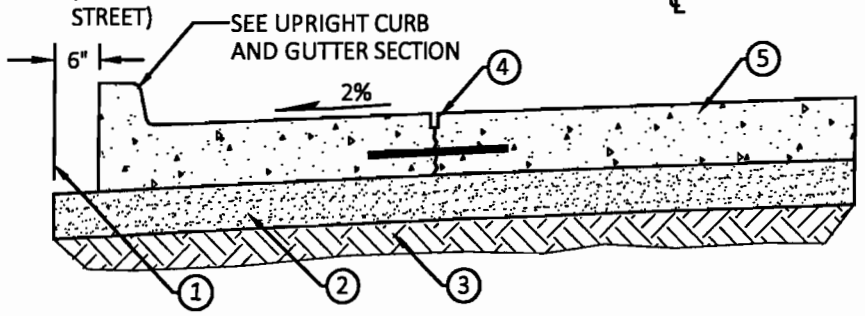

DETAIL - CONCRETE PAVEMENT KEY:

1. 6" Pay Limit of Aggregate Base
2. 4" Type 5 or Type 7 Aggregate
3. Compacted Subgrade
4. Location of Type "C" Joint
5. 7" Portland Cement Concrete

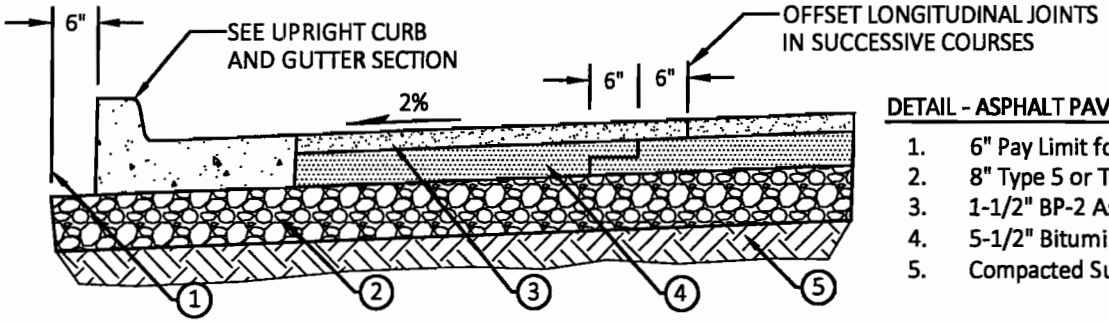

DETAIL - ASPHALT PAVEMENT KEY:

1. 6" Pay Limit for Aggregate Base
2. 8" Type 5 or Type 7 Aggregate
3. 1-1/2" BP-2 Asphalt Pavement
4. 5-1/2" Bituminous Base (Placed in 2 Lifts)
5. Compacted Subgrade

Local Street Widths Development Type:	"A" Right-of-Way	"B" Pavement	"C" Back of Curb	"D" Sidewalk	"E" On-Street Parking Lanes (Width/ Side)	Maximum Grade (%)
Single Family Lots > 1 Ac.	50'-0"	20'-0"	24'-0" *	N/A	7' One Side Only	12
Single Family & Two Family Lots < 1 Ac.	50'-0"	24'-0"	28'-0"	5'-0"	7' One Side Only	11
Multifamily Residential and Townhouses	60'-0"	36'-0"	40'-0"	6'-0"	7' Both Sides	10
Commercial	60'-0"	36'-0"	40'-0"	6'-0"	None	8

*TWO 2-FOOT SHOULDERS MAY BE USED IN LIEU OF CURBS.

Notes:

1. All work shall be done in accordance with the latest edition of the City of Cape Girardeau Standard Specifications.
2. Sidewalk offset widths greater than 2.5 feet are desirable in situations where it eliminates the need to depress the sidewalk profile across multiple driveways and accommodate street lighting.
3. Bike lanes may be required in some instances resulting in pavement widths greater than those shown. Refer to City Code.
4. Minimum street grade shall be 1.0% to insure proper drainage.
5. Utility easements of a ten foot width shall be provided on each side of Right-of-Way.
6. Additional lanes and Right-of-Way widths may be required to meet traffic needs.
7. Refer to Street Standards in City Code for additional requirements.
8. For concrete pavement see Joint Layout.

STATE OF MISSOURI
CASEY L. BRUNER
NUMBER PE-2010018549
PROFESSIONAL ENGINEER
02-25-16

Local Street Typical Sections

Prepared By: JH	Scale: NTS	Revisions:	CITY of CAPE GIRARDEAU DEVELOPMENT SERVICES City Standard Details
Checked By: TR - DW - JL			
Date: 02-25-2016	Page 12		

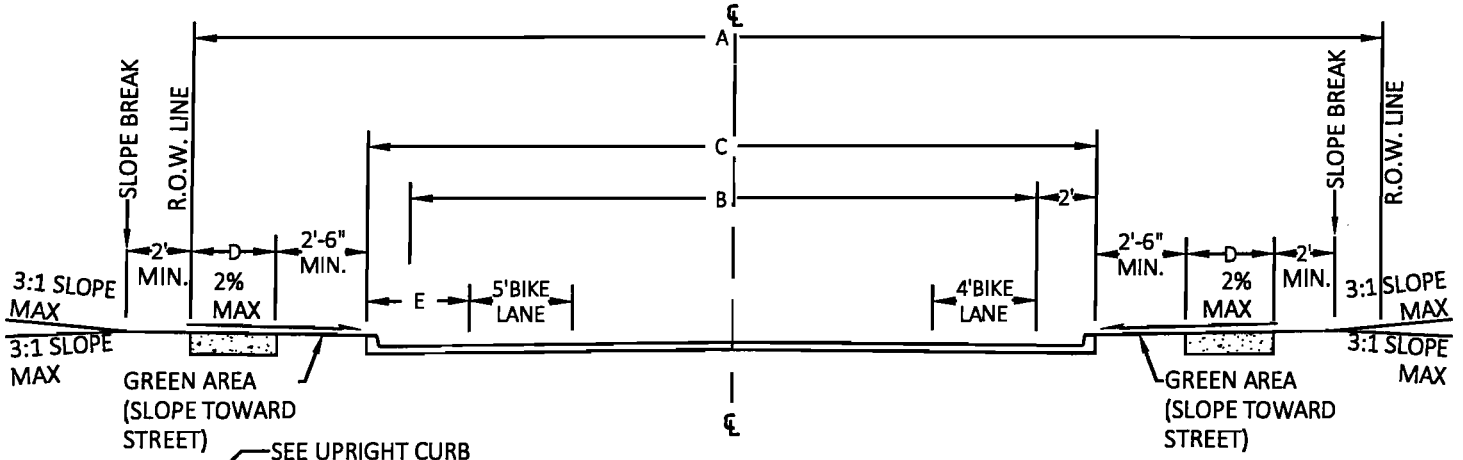

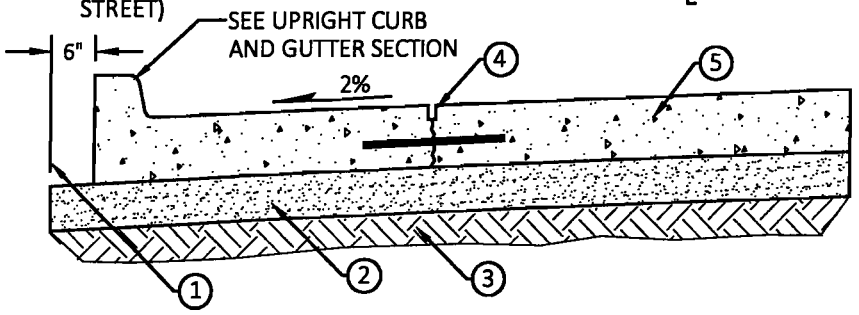

DETAIL - CONCRETE PAVEMENT KEY:

1. 6" Pay Limit of Aggregate Base
2. 4" Type 5 or Type 7 Aggregate
3. Compacted Subgrade
4. Location of Type "C" Joint
5. 7" Portland Cement Concrete

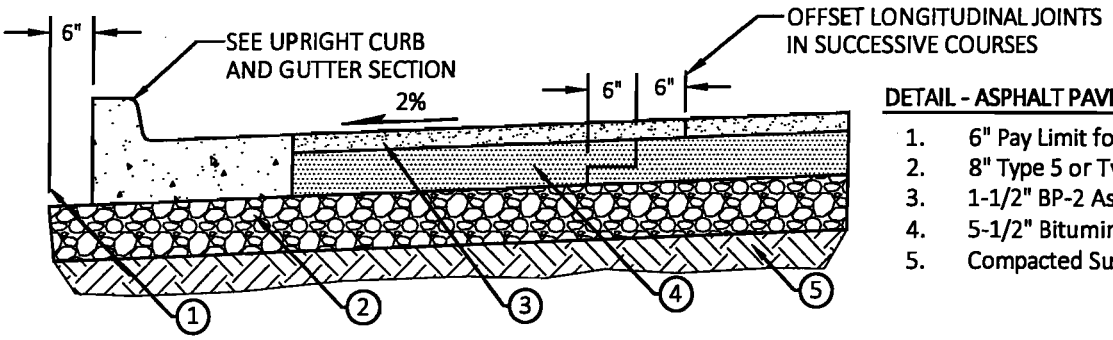

DETAIL - ASPHALT PAVEMENT KEY:

1. 6" Pay Limit for Aggregate Base
2. 8" Type 5 or Type 7 Aggregate
3. 1-1/2" BP-2 Asphalt Pavement
4. 5-1/2" Bituminous Base (Placed in 2 Lifts)
5. Compacted Subgrade

Collector Street Widths Development Type:	"A" Right-of-Way	"B" Pavement	"C" Back of Curb	"D" Sidewalk	"E" On-Street Parking Lanes (Width/ Side)	Maximum Grade (%)
Single Family Residential Lots > 1 Ac.	60'-0"	24'-0"	28'-0"	5'-0"	None	10
Single Family & Two Family Lots < 1 Ac.	60'-0"	27'-0"	31'-0"	5'-0"	7' One Side Only	10
Multifamily Residential and Townhouses	80'-0"	36'-0"	40'-0"	6'-0"	7' Both Sides	10
Commercial	80'-0"	40'-0"	44'-0"	6'-0"	8' Both Sides	7

Notes:

1. All work shall be done in accordance with the latest edition of the City of Cape Girardeau Standard Specifications.
2. Sidewalk offset widths greater than 2.5 feet are desirable in situations where it eliminates the need to depress the sidewalk profile across multiple driveways and accommodate street lighting.
3. Bike lanes may be required in some instances resulting in pavement widths greater than those shown. Refer to City Code.
4. Minimum street grade shall be 1.0% to insure proper drainage.
5. Utility easements of a ten foot width shall be provided on each side of Right-of-Way.
6. Additional lanes and Right-of-Way widths may be required to meet traffic needs.
7. Refer to Street Standards in City Code for additional requirements.
8. For concrete pavement see Joint Layout.

STATE OF MISSOURI
CASEY L. BRUNER
NUMBER
PE-2010018549
PROFESSIONAL ENGINEER
02-25-16

Collector Street Typical Sections

Prepared By: JH	Scale: NTS	Revisions:	CITY of CAPE GIRARDEAU DEVELOPMENT SERVICES City Standard Details
Checked By: TR - DW - JL			
Date: 02-25-2016	Page 13		

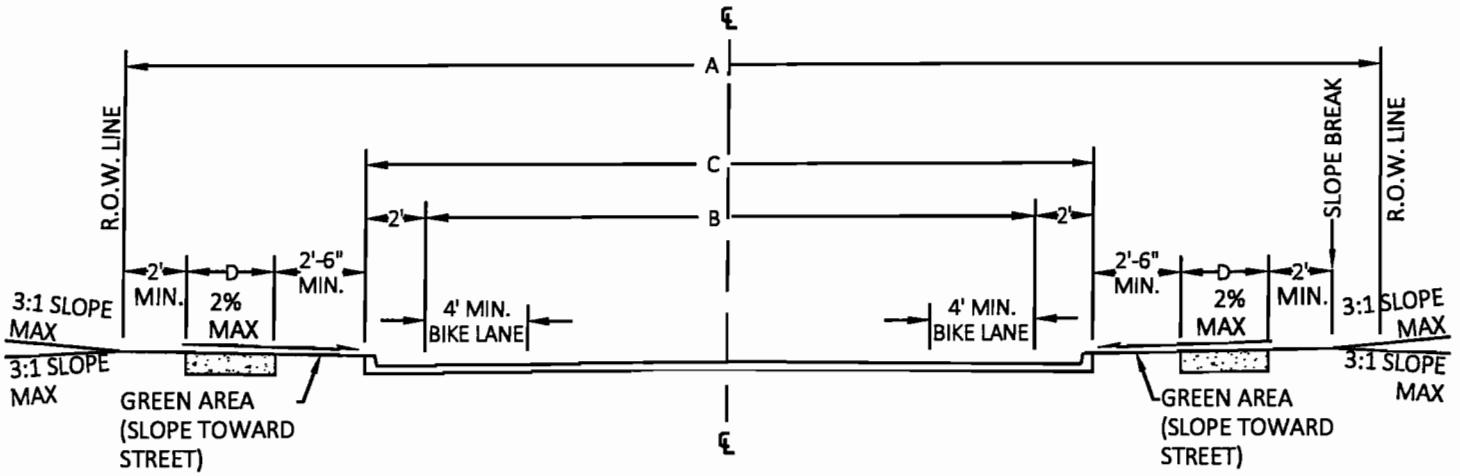

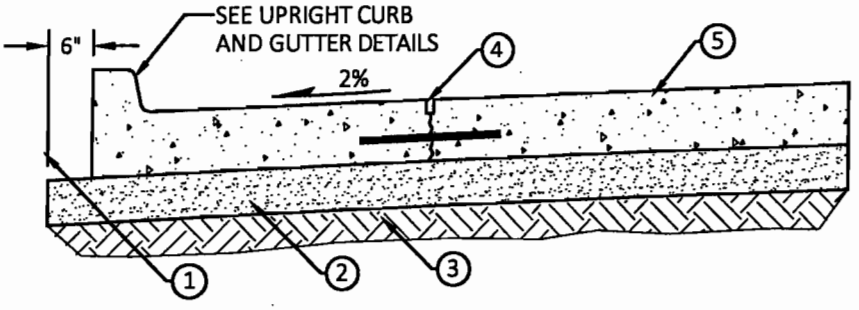

DETAIL - CONCRETE PAVEMENT KEY:

1. 6" Pay Limit of Aggregate Base
2. 6" Type 5 or Type 7 Aggregate
3. Compacted Subgrade
4. Location of Type "C" Joint
5. 8" Portland Cement Concrete

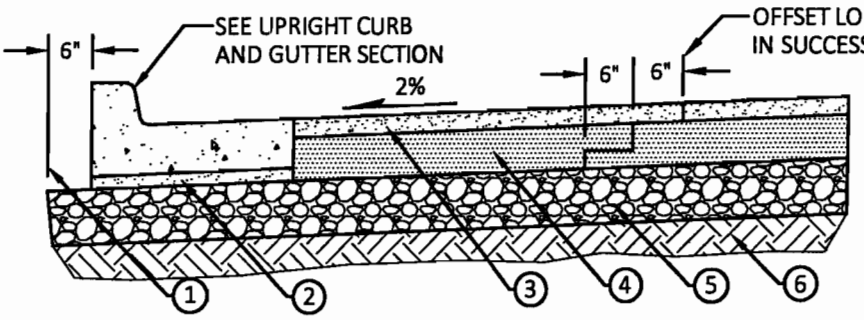

DETAIL - ASPHALTIC CONCRETE PAVEMENT KEY:

1. 6" Pay Limit for Aggregate Base
2. Aggregate Base or Thicken Curb and Gutter (No Direct Pay)
3. 2" SP125 Asphaltic Concrete Pavement
4. 7" SP250 (Placed in 2 Lifts)
5. 10" Type 5 or Type 7 Aggregate
6. Compacted Subgrade

Arterial Street Widths Development Type:	"A" Right-of-Way	"B" Pavement	"C" Back of Curb	"D" Sidewalk	Bike Lanes Min.	Maximum Grade (%)
Multifamily Residential and Townhouses	100'-0"	36'-0"	40'-0"	6'-0"	4'-0"	8
Commercial	100'-0"	36'-0"	40'-0"	6'-0"	4'-0"	6

Notes:

1. All work shall be done in accordance with the latest edition of the City of Cape Girardeau Standard Specifications.
2. Sidewalk offset widths greater than 2.5 feet are desirable in situations where it eliminates the need to depress the sidewalk profile across multiple driveways and accommodate street lighting.
3. Bike lanes may be required in some instances resulting in pavement widths greater than those shown. Refer to City Code.
4. Minimum street grade shall be 1.0% to insure proper drainage.
5. Utility easements of a ten foot width shall be provided on each side of Right-of-Way.
6. Additional lanes and Right-of-Way widths may be required to meet traffic needs.
7. Refer to Street Standards in City Code for additional requirements.
8. For concrete pavement see Joint Layout.

STATE OF MISSOURI
CASEY L. BRUNER
NUMBER
PE-2010018549
PROFESSIONAL ENGINEER
02-25-16

Arterial Street Typical Sections

Prepared By: JH	Scale: NTS	Revisions:	CITY of CAPE GIRARDEAU DEVELOPMENT SERVICES City Standard Details
Checked By: TR - DW - JL			
Date: 02-25-2016	Page 14		

CUL-DE-SAC JOINT PLAN

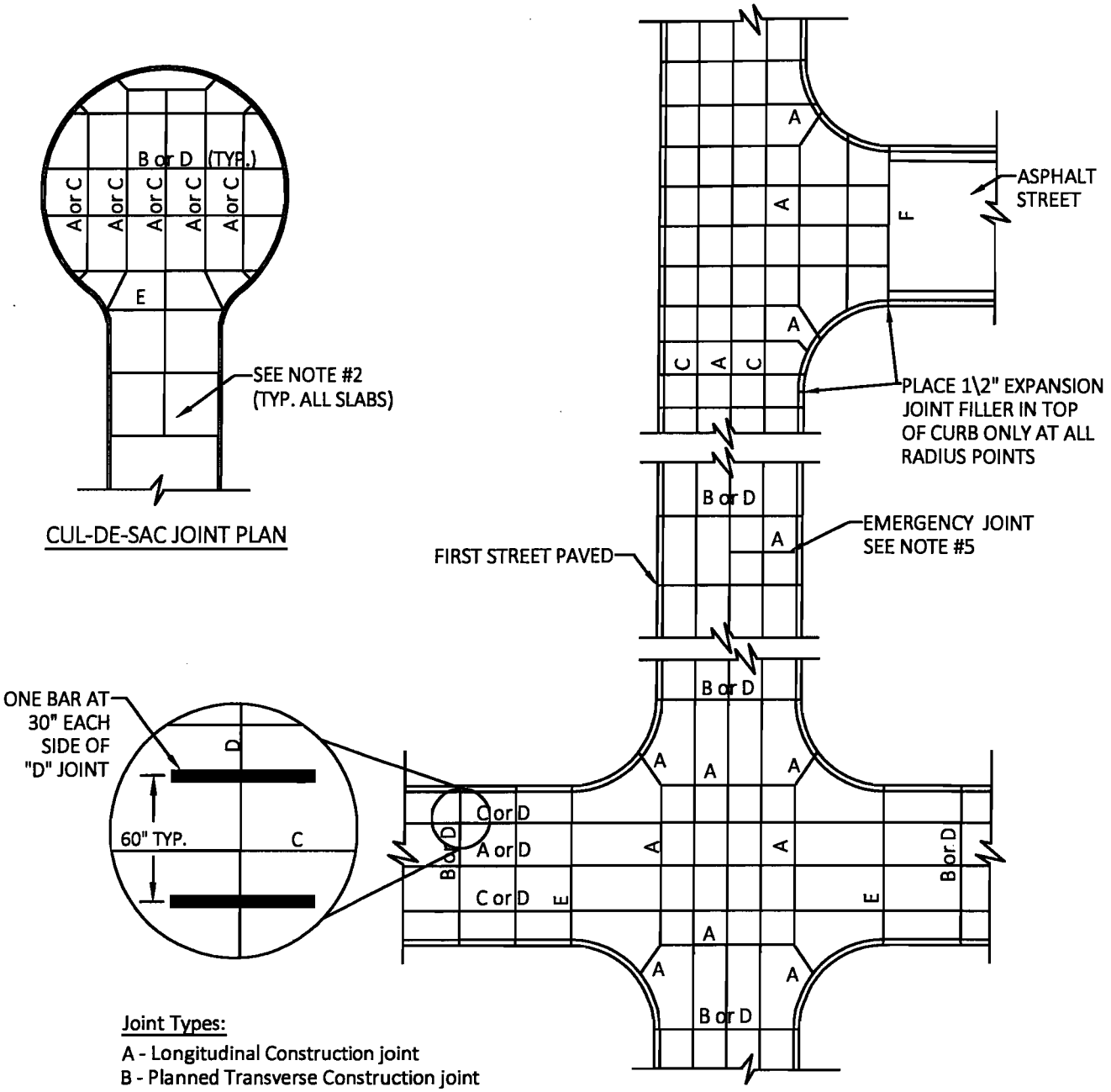

PAVEMENT JOINTS

Joint Types:

A - Longitudinal Construction joint
B - Planned Transverse Construction joint
C - Longitudinal Contraction joint
D - Transverse Contraction joint
E - Isolation joints
F - Pavement Connection

Notes:

1. All work shall be done in accordance with the latest edition of the City of Cape Girardeau Standard Specifications.
2. Longitudinal Joints shall be maximum spacing of 14 feet. Transverse joints shall be maximum spacing of 15 feet. Ratio length-to-width for slabs shall be 3 to 2 maximum.
3. Joints type "C" and "D" shall be sawed as soon as concrete can withstand raveling. All sawed joints shall be cleaned and filled with bituminous compound following sawing.
4. Use Type "A" or "B" Joint at end of days work.
5. Emergency transverse joints shall be Type "A" with #4 rebar 30" long at 24" centers.

STATE OF MISSOURI
CASEY L. BRUNKE
NUMBER
PE-2010018549
PROFESSIONAL ENGINEER
07-05-16

Joint Layout Details for Concrete Pavement

Prepared By: JH	Scale: NTS	Revisions:
Checked By: TR - DW - JL		
Date: 02-25-2016	Page 15	

CITY of CAPE GIRARDEAU
DEVELOPMENT SERVICES
City Standard Details

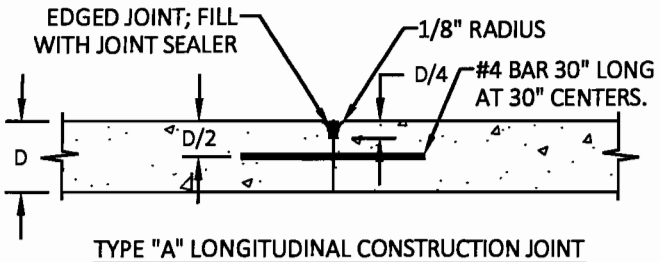

TYPE "A" LONGITUDINAL CONSTRUCTION JOINT
(WITH TIE BAR)

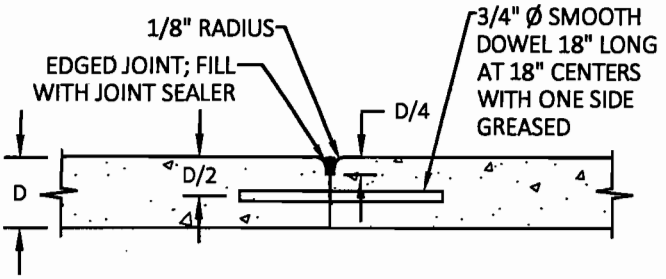

TYPE "B" TRANSVERSE CONSTRUCTION JOINT
(DOWELED)

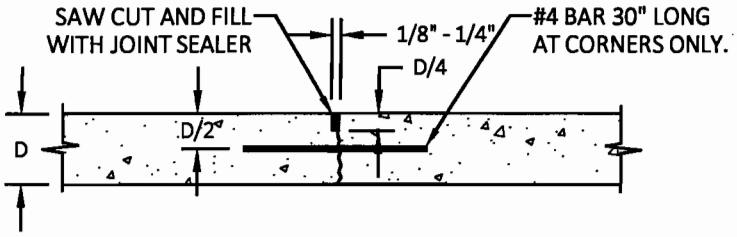

TYPE "C" LONGITUDINAL SAWED CONTRACTION JOINT
(WITH TIE BAR)

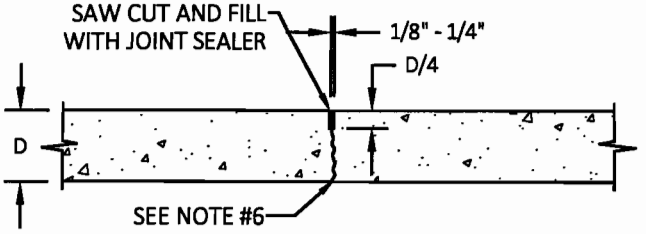

TYPE "D" TRANSVERSE SAWED CONTRACTION JOINT

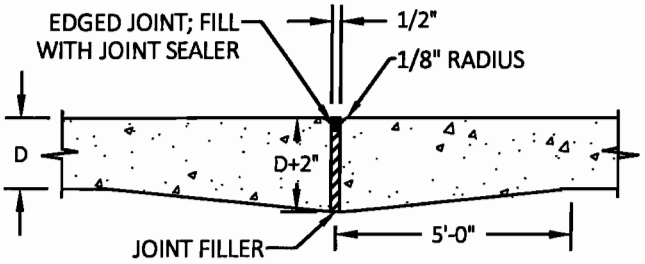

TYPE "E" ISOLATION JOINT

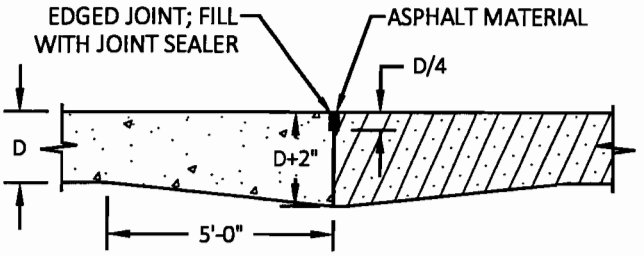

TYPE "F" PAVING CONNECTION - P.C.C. TO ASPHALT PAVEMENT
(USE WHERE CONCRETE AND ASPHALT PAVEMENTS MEET)

Notes:

1. All work shall be done in accordance with the latest edition of the City of Cape Girardeau Standard Specifications.
2. Saw cut depth shall be one quarter (1/4) of the pavement thickness (D).
3. Bars that are drilled shall be tightly set with epoxy filler, per APL.
4. Isolation joint filler shall consist of 3/4" preformed fiber expansion joint filler, per APL.
5. Thickened edge isolation joints shall be placed at "T" intersections and unsymmetrical intersections at locations shown on the Joint Layout Detail. Isolation joints shall be constructed adjacent to fixed objects when specified by the Engineer. Isolation joints placed at fixed objects do not require a thickened edge.
6. For Contraction and Isolation joints in sidewalks see City of Cape Girardeau Standard Specifications.
7. See APL for joint sealant material.

STATE OF MISSOURI
CASEY L. BRUNKER
NUMBER
PE-2010018549
PROFESSIONAL ENGINEER
02-25-16

Joint Details - Portland Cement Concrete Pavement Streets

Prepared By: JH	Scale: NTS	Revisions:	CITY of CAPE GIRARDEAU DEVELOPMENT SERVICES City Standard Details
Checked By: TR - DW - JL			
Date: 02-25-2016	Page 16		

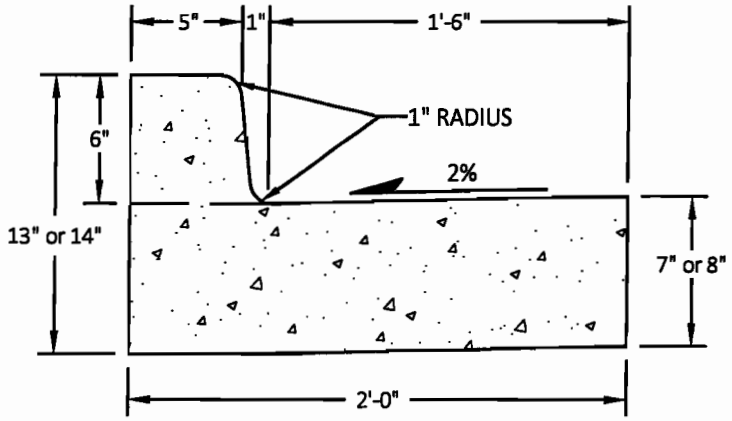

UPRIGHT 6" CURB AND GUTTER SECTION

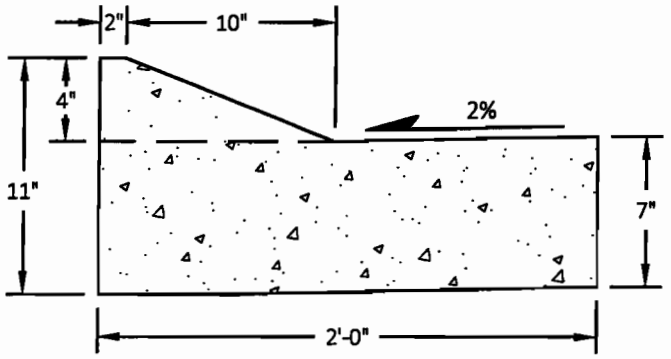

LIP CURB AND GUTTER SECTION

Notes:

1. All work shall be done in accordance with the latest edition of the City of Cape Girardeau Standard Specifications.
2. Lip curb allowed on Local and Collector Streets only.
3. Concrete shall have 28 day minimum strength of 4000 PSI.
4. Upright curb must be used if sidewalk located less than 2.5 feet from back of curb.
5. A six (6") inch curb shall not be depressed over four and half (4 1/2") inches.
6. All curbs and gutters shall be placed monolithically.
7. Saw cut contraction joints for curb and gutter sections at 15 foot intervals or as directed by Engineer. Provide half (1/2) inch preformed expansion joints at 75 foot intervals and at ends of curb returns and all radius points.
8. See Street Sections regarding placement of base under curb and gutter.
9. Integral curb shall be at the same profile.

STATE OF MISSOURI
CASEY L. BRUNKE
NUMBER
PE-2010018549
PROFESSIONAL ENGINEER
02-25-16

Curb and Gutter

Prepared By: JH	Scale: NTS	Revisions:	CITY of CAPE GIRARDEAU DEVELOPMENT SERVICES City Standard Details
Checked By: TR - DW - JL			
Date: 02-25-2016	Page 17		

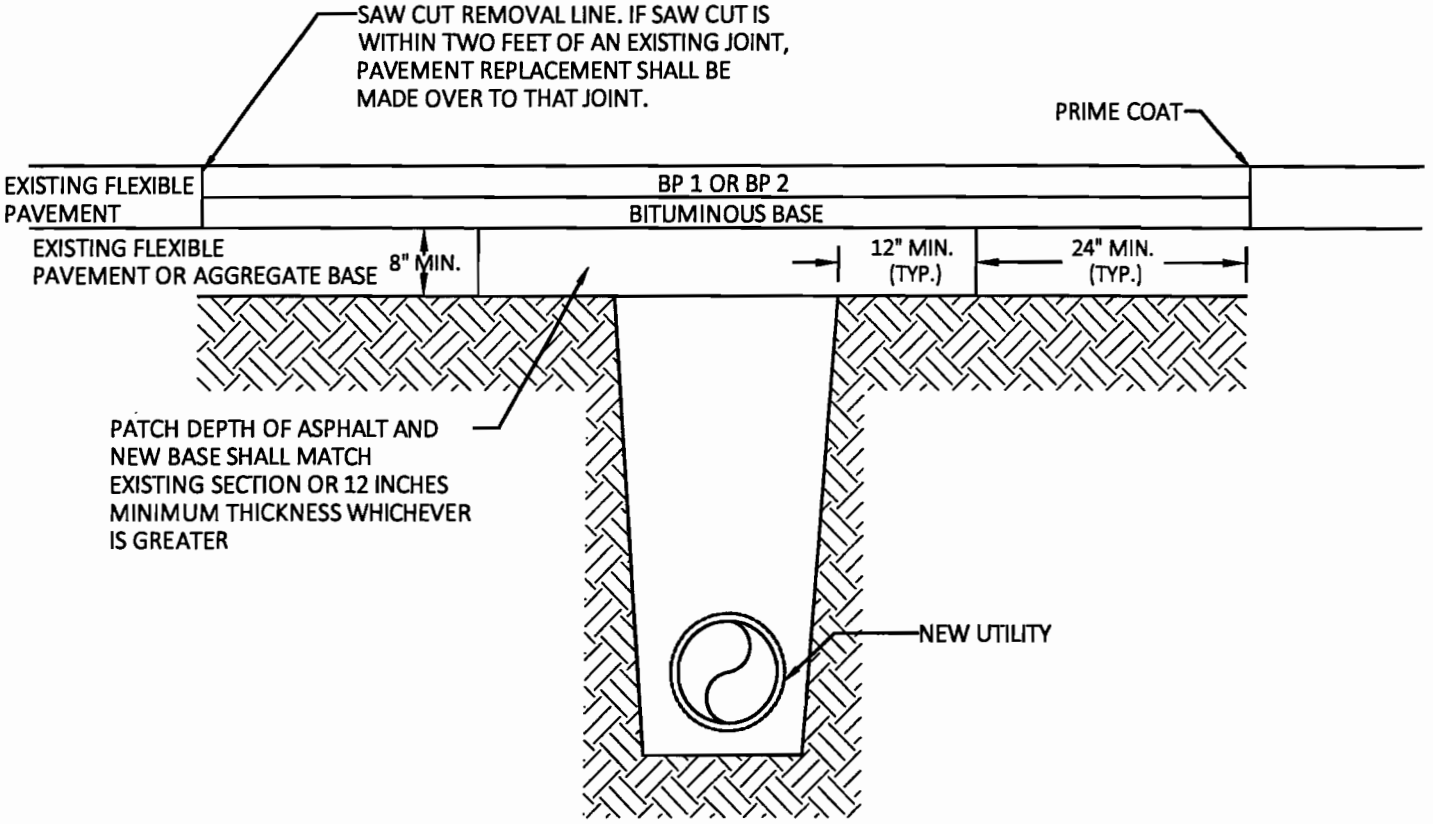

Notes:

1. All work shall be done in accordance with the latest edition of the City of Cape Girardeau Standard Specifications.
2. All excavations in City Right-of-Way require permits in conjunction with a three day notice prior to the start of work. Contractor shall be responsible for providing and maintaining traffic control during construction. All traffic control devices shall conform to the latest edition of the Manual on Uniform Traffic Control Devices (MUTCD) and the MoDOT Quality Standards for Temporary Traffic Control Devices.
3. All cuts in streets, curbs and sidewalks shall be sawed. Backfill shall be aggregate compacted to density equal to that of the surrounding materials.
4. Surface of the new patch shall conform to the grade that existed prior to excavation so as to leave the street surface smooth. Disturbed unpaved areas shall be leveled, seeded and mulched.
5. Non-emergency excavations shall occur from 8:30 AM to 4:00 PM week days. There shall be a 48 hour maximum "open time" for excavations before temporary or permanent patch is made. All openings shall be closed and the street opened for traffic by 4:00 PM daily.
6. Where it is necessary to leave an excavation open, such as for concrete curing in the bottom of manholes, a cover shall be provided and set over the opening that will support any load that may pass over the hole.
7. When an emergency occurs that requires excavation within City Right-of-Way and City offices are closed, the work may be done but the City shall be notified immediately when offices are re-opened.

STATE OF MISSOURI
CASEY L. BRUNKE
NUMBER
PE-2010018549
PROFESSIONAL ENGINEER
02-25-16

Flexible Pavement Repair

Prepared By: JH	Scale: NTS	Revisions:	CITY of CAPE GIRARDEAU DEVELOPMENT SERVICES City Standard Details
Checked By: TR - DW - JL			
Date: 02-25-2016	Page 18		

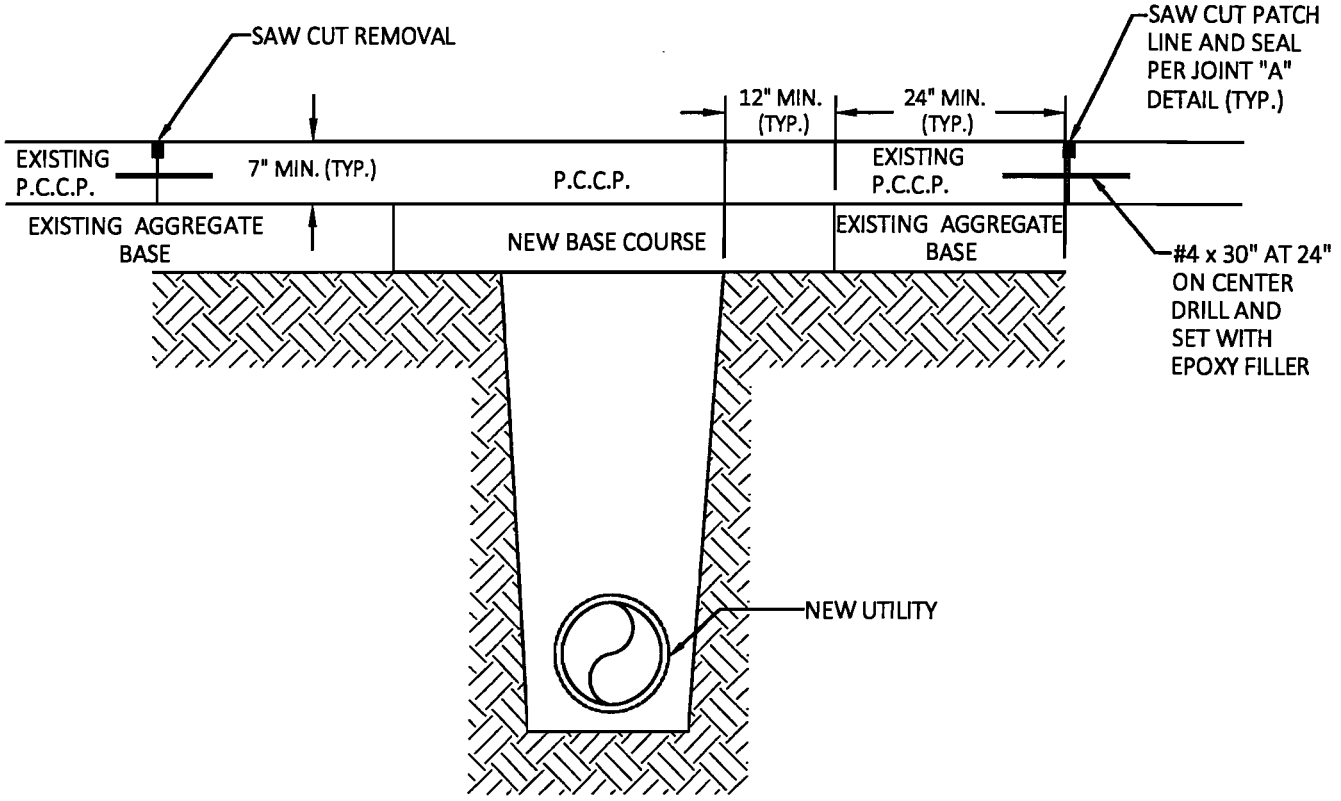

Notes:

1. All work shall be done in accordance with the latest edition of the City of Cape Girardeau Standard Specifications.
2. Concrete shall have 28 day minimum strength of 4000 PSI.
3. All excavations in City Right-of-Way require permits. Contractor shall be responsible for providing and maintaining traffic control during construction. All traffic control devices shall conform to the latest edition of the Manual on Uniform Traffic Control Devices (MUTCD) and the MoDOT Quality Standards for Temporary Traffic Control Devices.
4. All cuts in streets, curbs and sidewalks shall be sawed. Backfill shall be aggregate compacted to density equal to that of the surrounding materials.
5. Surface of the new patch shall conform to the grade that existed prior to excavation so as to leave the street surface smooth. Disturbed unpaved areas shall be leveled, seeded and mulched.
6. Non-emergency excavations shall occur from 8:30 AM to 4:00 PM week days. There shall be a 48 hour maximum "open time" for excavations before temporary or permanent patch is made. All openings shall be closed and the street opened for traffic by 4:00 PM daily.
7. Where it is necessary to leave an excavation open, such as for concrete curing in the bottom of manholes, a cover shall be provided and set over the opening that will support any load that may pass over the hole.
8. When an emergency occurs that requires excavation within City Right-of-Way and City offices are closed, the work may be done but the City shall be notified immediately when offices are re-opened.
9. When concrete patches are completed, the excavation permit number and date shall be imprinted in the surface of the patch.
10. If saw cut is within two feet of an existing pavement joint, pavement replacement shall be made over to that joint.
11. Patch depth of concrete and new base shall match existing section or 11 inches minimum whichever is greater.

STATE OF MISSOURI
CASEY L. BRUNKE
NUMBER
PE-2010018549
PROFESSIONAL ENGINEER
02-25-16

Concrete Pavement Repair

Prepared By: JH	Scale: NTS	Revisions:
Checked By: TR - DW - JL		
Date: 02-25-2016	Page 19	

CITY of CAPE GIRARDEAU
DEVELOPMENT SERVICES
City Standard Details

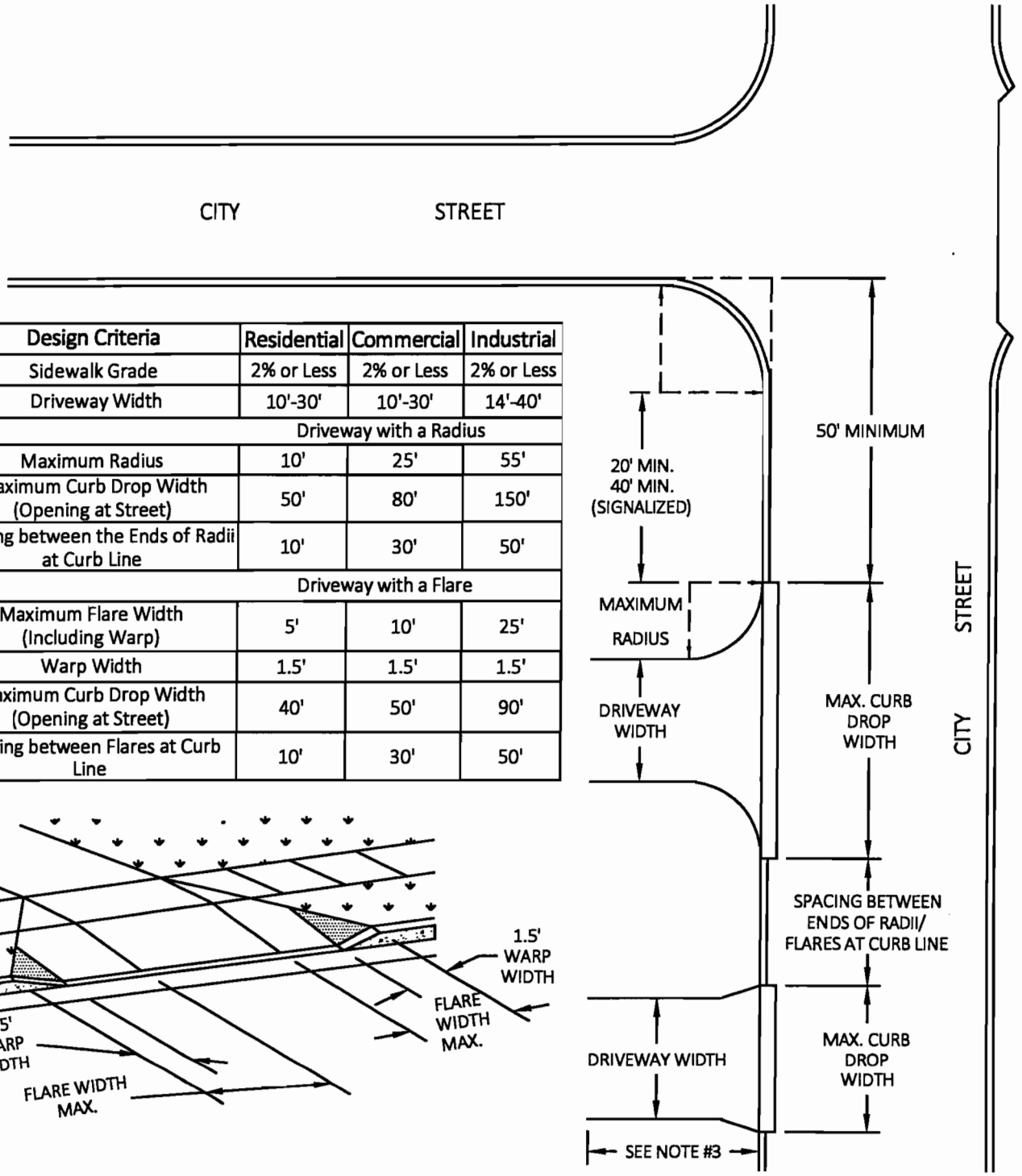

Design Criteria	Residential	Commercial	Industrial
Sidewalk Grade	2% or Less	2% or Less	2% or Less
Driveway Width	10'-30'	10'-30'	14'-40'
Driveway with a Radius			
Maximum Radius	10'	25'	55'
Maximum Curb Drop Width (Opening at Street)	50'	80'	150'
Spacing between the Ends of Radii at Curb Line	10'	30'	50'
Driveway with a Flare			
Maximum Flare Width (Including Warp)	5'	10'	25'
Warp Width	1.5'	1.5'	1.5'
Maximum Curb Drop Width (Opening at Street)	40'	50'	90'
Spacing between Flares at Curb Line	10'	30'	50'

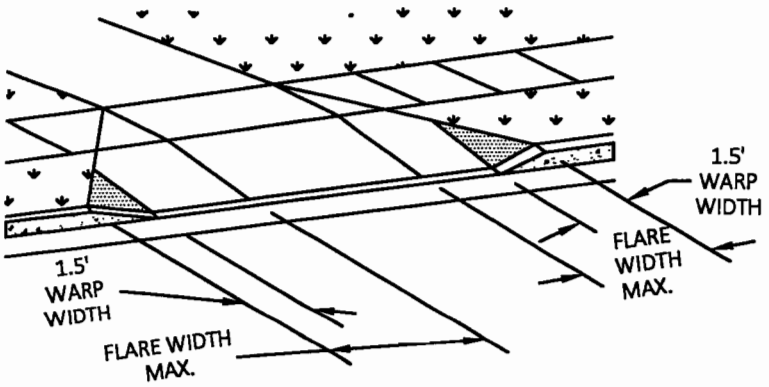

Notes:

1. All work shall be done in accordance with the latest edition of the City of Cape Girardeau Standard Specifications.
2. No portion of the driveway flare or radius shall extend onto adjacent property frontage.
3. A minimum driveway throat length is measured between the parking lot and the curb line which shall be required for multi-family, commercial, and industrial driveways as described in the City Code.
4. Industrial driveways shall be designed for site specific conditions and be constructed with an ADA Compliant sidewalk crossing whether or not a sidewalk connection is made.
5. All Industrial driveways within City Right-of-Way shall be seven inch thick concrete minimum with four inches of Type 5 or 7 aggregate base.
6. Fifty foot minimum corner clearance is required for Local and Collector streets as measured from the intersection of the tangent lines of the corner radius. See City Code for Arterial streets.

STATE OF MISSOURI
CASEY L. BRUNKE
NUMBER
PE-2010018549
PROFESSIONAL ENGINEER
02-25-16

Driveway Standards

Prepared By: JH	Scale: NTS	Revisions:	CITY of CAPE GIRARDEAU DEVELOPMENT SERVICES City Standard Details
Checked By: TR - DW - JL			
Date: 02-25-2016	Page 20		

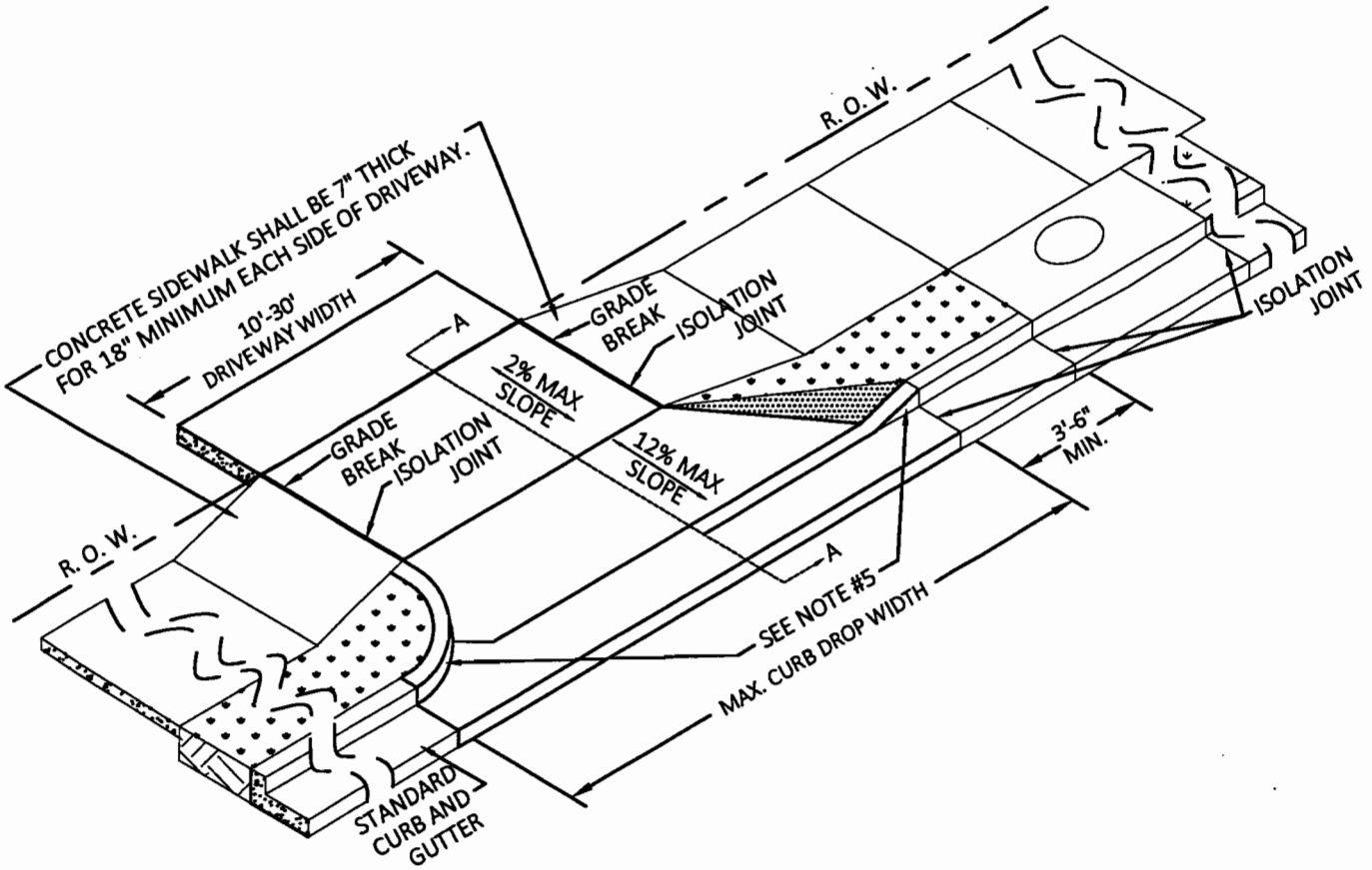

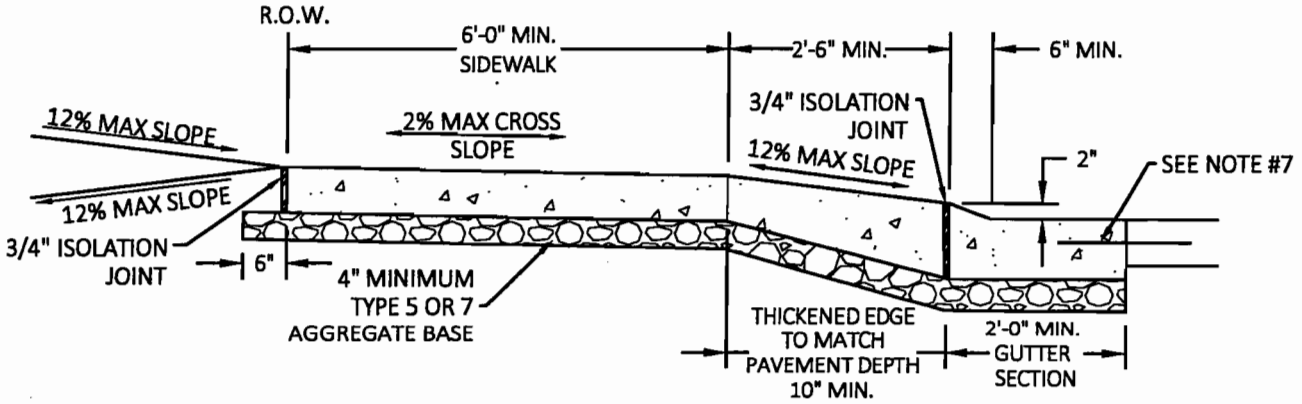

SECTION A-A

Notes:

1. All work shall be done in accordance with the latest edition of the City of Cape Girardeau Standard Specifications.
2. All Commercial driveways within City Right-of-Way shall be seven inch thick concrete minimum with four inches of Type 5 or 7 aggregate base.
3. All driveways shall be constructed with an ADA Compliant sidewalk crossing whether or not a sidewalk connection is made.
4. Driveway grade within the City Right-of-Way shall not exceed twelve percent, excluding the sidewalk crossing surface.
5. The driveway approach may have either a radius or a flare. The maximum radius shall be 25 feet. This driveway design is intended for low to moderate peak hour volumes. Driveways with higher volumes shall be engineered to accommodate traffic flow needs.
6. Isolation joints of 3/4" preformed fiber expansion joint filler shall be provided at the Right-of-Way line. See Standard Specifications for additional joint requirements at locations where "Street Creep" may be a potential issue. See APL for fiber filler and joint sealer.
7. Drill and epoxy #4 x 18" long deformed bars on 18" centers.
8. 8.33% maximum slope for sidewalk ramps.

STATE OF MISSOURI
CASEY L. BRUNKE
NUMBER PE-2010018549
PROFESSIONAL ENGINEER
02-25-16

Commercial Driveway with Green Area (Curbed or Flared)

Prepared By: JH	Scale: NTS	Revisions:	CITY of CAPE GIRARDEAU DEVELOPMENT SERVICES City Standard Details
Checked By: TR - DW - JL			
Date: 02-25-2016	Page 21		

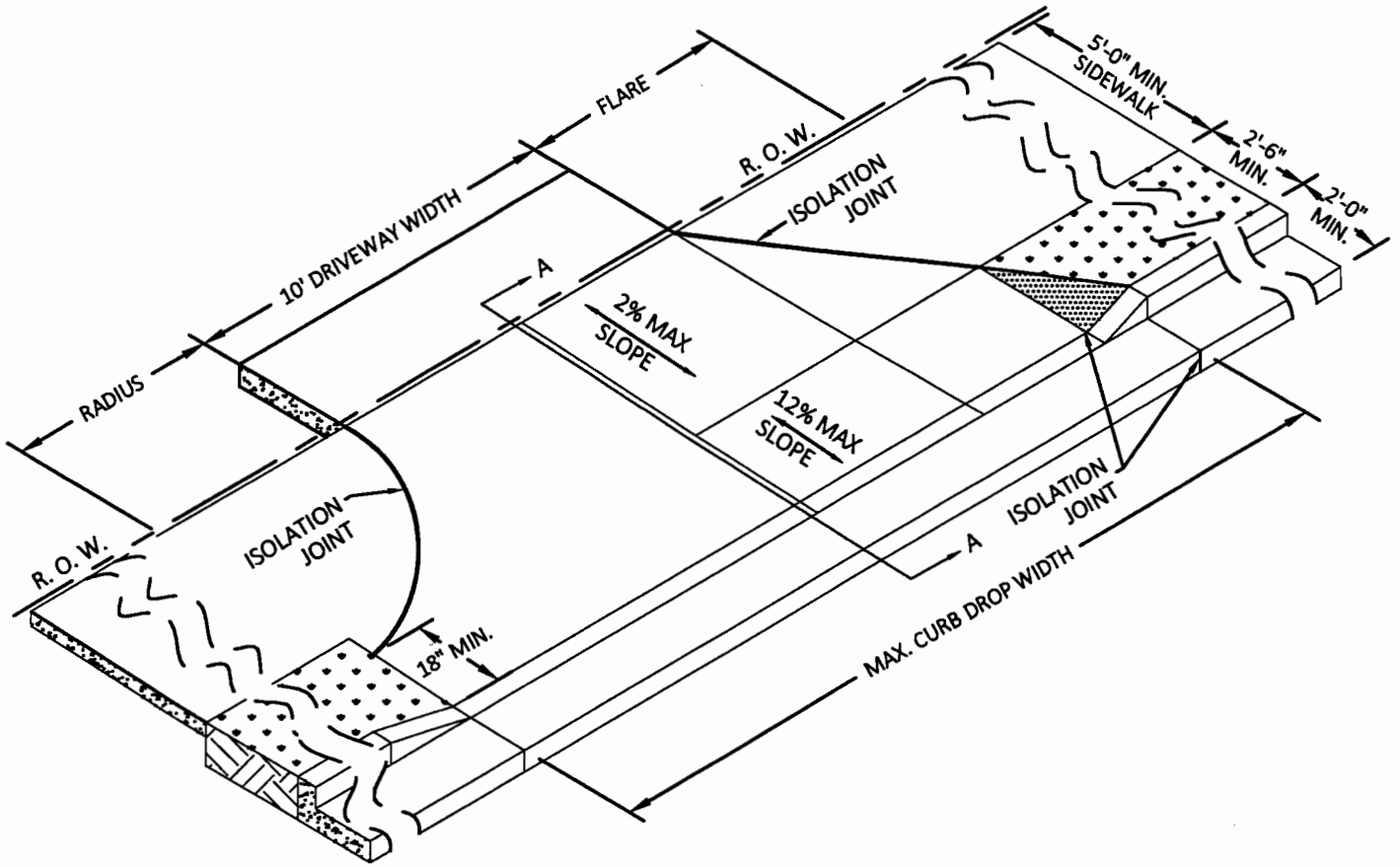

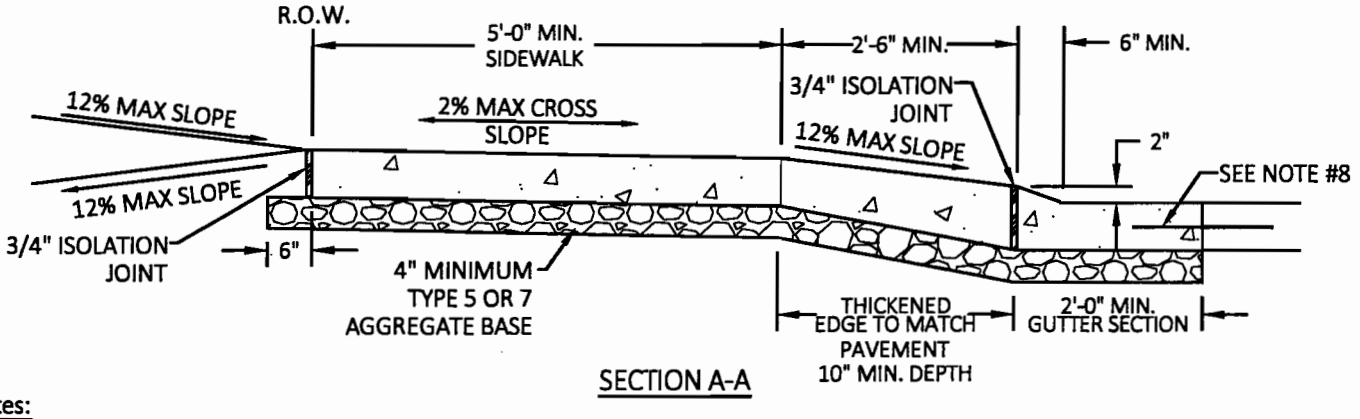

SECTION A-A

Notes:

1. All work shall be done in accordance with the latest edition of the City of Cape Girardeau Standard Specifications.
2. All Residential driveways within City Right-of-Way shall be six inch thick concrete minimum with four inches of Type 5 or 7 aggregate base.
3. All driveways shall be constructed with an ADA Compliant sidewalk crossing whether or not a sidewalk connection is made.
4. Driveway grade within the City Right-of-Way shall not exceed twelve percent, excluding the sidewalk crossing surface.
5. The driveway approach may have either a radius or a flare. The maximum radius shall be 15 feet, this driveway design is intended for low to moderate peak hour volumes. Driveways with higher volumes shall be engineered to accommodate traffic flow needs.
6. Driveways for duplex units with two double garages can be spaced less than ten feet apart provided that the combined width (including the space between driveways) does not exceed 30 feet.
7. Isolation joints of 3/4" preformed fiber expansion joint filler shall be provided between driveway slab and street and at the Right-of-Way line. See Standard Specifications for additional joint requirements at locations where "Street Creep" may be a potential issue. See APL for fiber filler and joint sealer.
8. Drill and epoxy #4 x 18" long deformed bars on 18" centers.

STATE OF MISSOURI
CASEY L. BRUNER
NUMBER
PE-2010018549
PROFESSIONAL ENGINEER
02-25-16

Residential Driveway with Green Area (Radius or Flared)

Prepared By: JH	Scale: NTS	Revisions:	CITY of CAPE GIRARDEAU DEVELOPMENT SERVICES City Standard Details
Checked By: TR - DW - JL			
Date: 02-25-2016	Page 22		

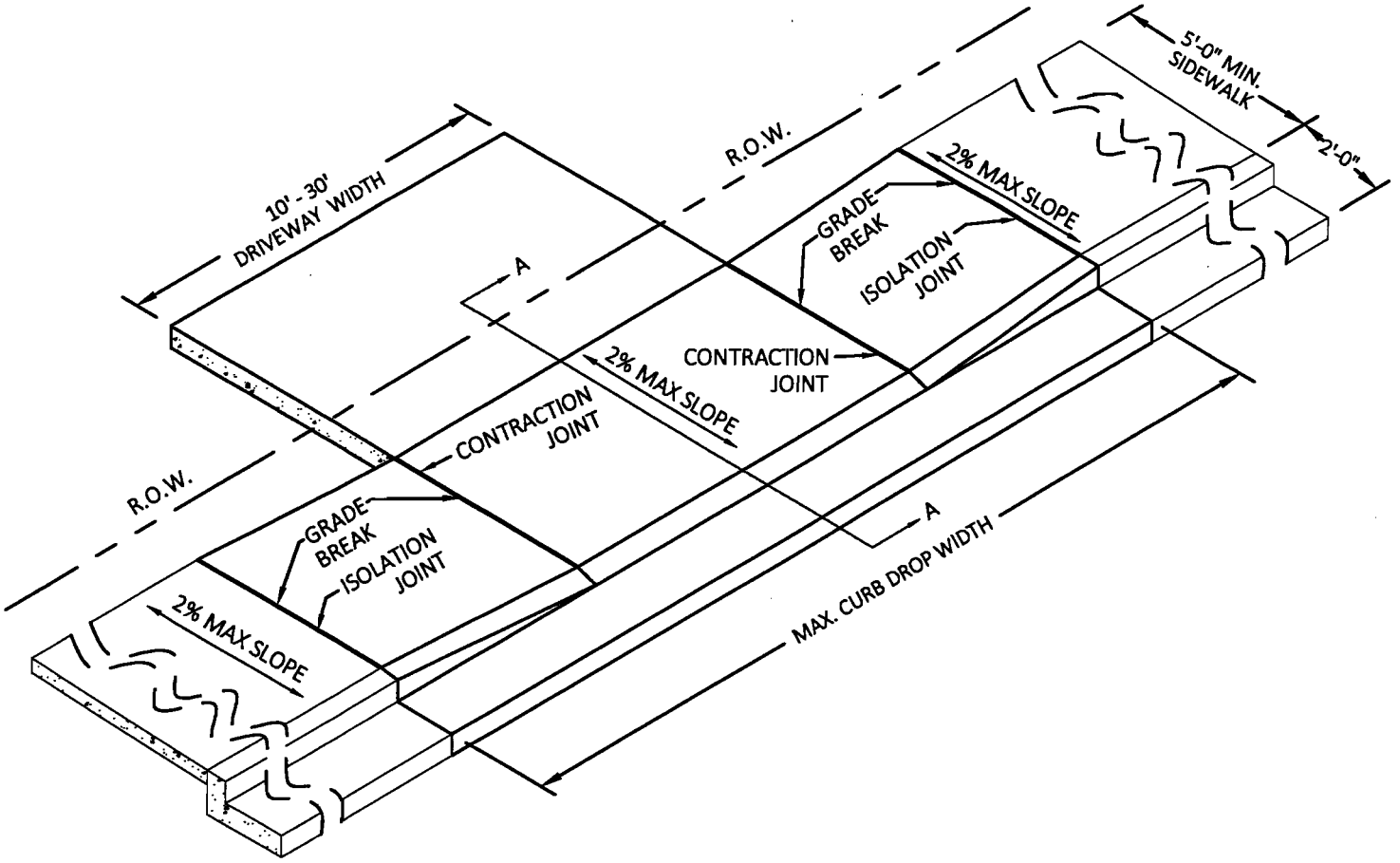

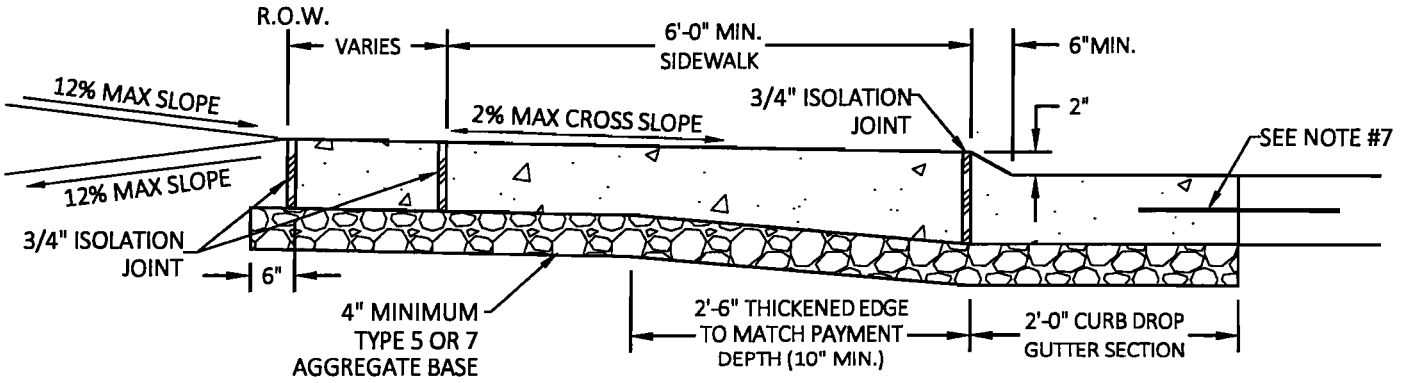

SECTION A-A

Notes:

1. All work shall be done in accordance with the latest edition of the City of Cape Girardeau Standard Specifications.
2. All Commercial driveways within City Right-of-Way shall be seven inch thick concrete minimum with four inches of Type 5 or 7 aggregate base.
3. All Residential driveways within City Right-of-Way shall be six inch thick concrete minimum with four inches of Type 5 or 7 aggregate base.
4. All driveways shall be constructed with an ADA Compliant sidewalk crossing whether or not a sidewalk connection is made.
5. Driveway grade within the City Right-of-Way shall not exceed twelve percent, excluding the sidewalk crossing surface.
6. Isolation joints of 3/4" preformed fiber expansion joint filler shall be provided between driveway slab and street and at the Right-of-Way line. See Standard Specifications for additional joint requirements at locations where "Street Creep" may be a potential issue. See APL for fiber filler and joint sealer.
7. Drill and epoxy #4 x 18" long deformed bars on 18" centers.

STATE OF MISSOURI
CASEY L. BRUNKE
NUMBER PE-2010018549
PROFESSIONAL ENGINEER
02-25-16

Commercial or Residential Driveway without Green Area

Prepared By: JH	Scale: NTS	Revisions:	CITY of CAPE GIRARDEAU DEVELOPMENT SERVICES City Standard Details
Checked By: TR - DW - JL			
Date: 02-25-2016	Page 23		

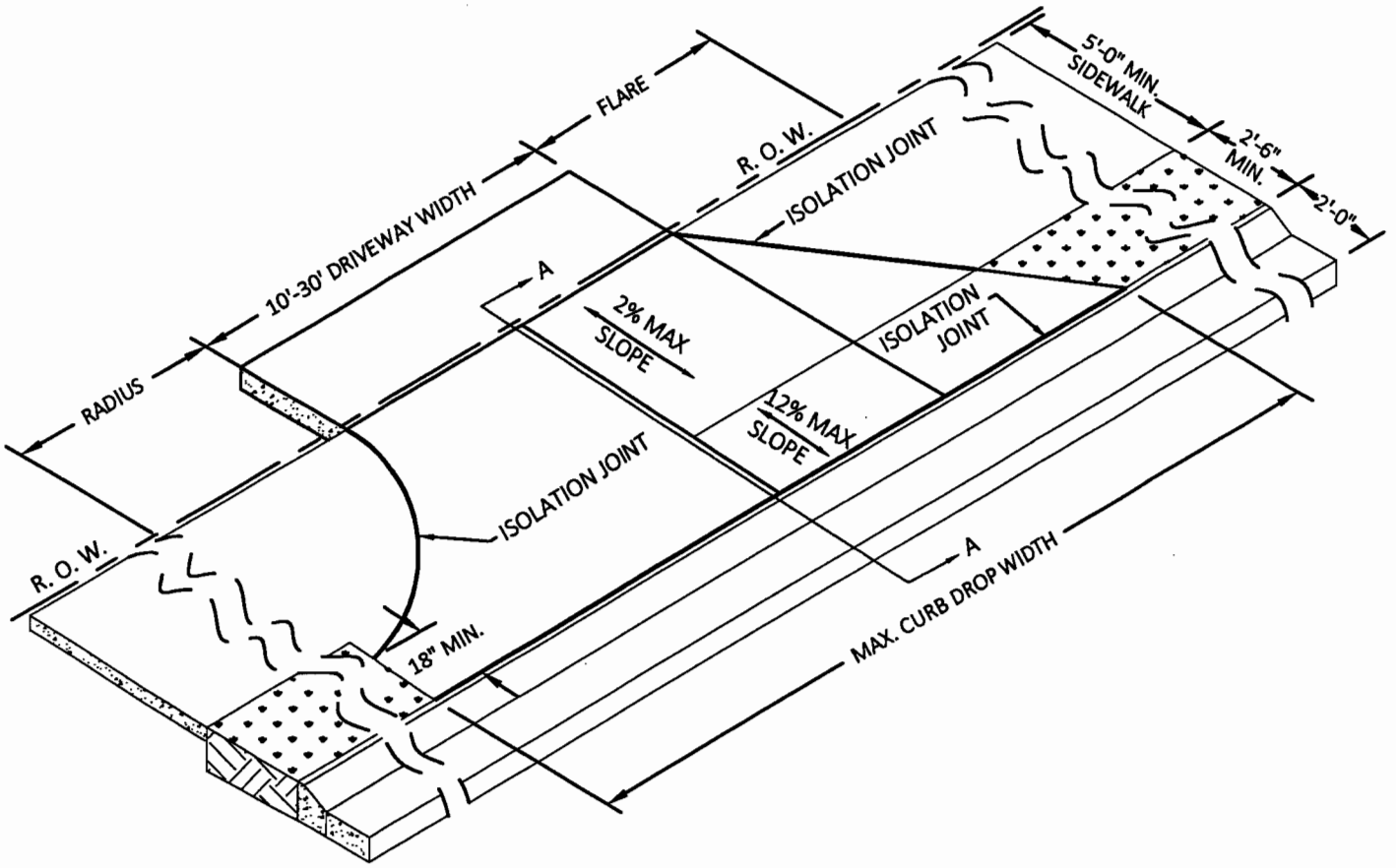

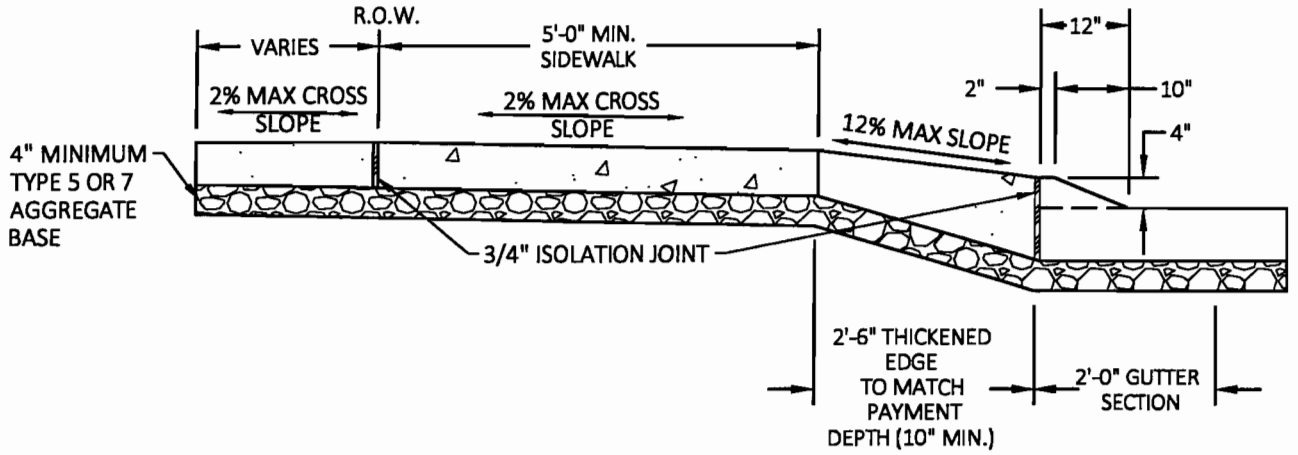

SECTION A-A

Notes:

1. All work shall be done in accordance with the latest edition of the City of Cape Girardeau Standard Specifications.
2. All Residential driveways within City Right-of-Way shall be six inch thick concrete minimum with four inches of Type 5 or 7 aggregate base.
3. All driveways shall be constructed with an ADA Compliant sidewalk crossing whether or not a sidewalk connection is made.
4. Driveway grade within the City Right-of-Way shall not exceed twelve percent, excluding the sidewalk crossing surface.
5. Isolation joints of 3/4" preformed fiber expansion joint filler shall be provided between driveway slab and street and at the Right-of-Way line. See Standard Specifications for additional joint requirements at locations where "Street Creep" may be a potential issue. See APL for fiber filler and joint sealer.

STATE OF MISSOURI
CASEY L. BRUNER
NUMBER
PE-2010018549
PROFESSIONAL ENGINEER
02-25-16

Driveway with 4" Lip Curb

Prepared By: JH	Scale: NTS	Revisions:
Checked By: TR - DW - JL		
Date: 02-25-2016	Page 24	

CITY of CAPE GIRARDEAU
DEVELOPMENT SERVICES
City Standard Details

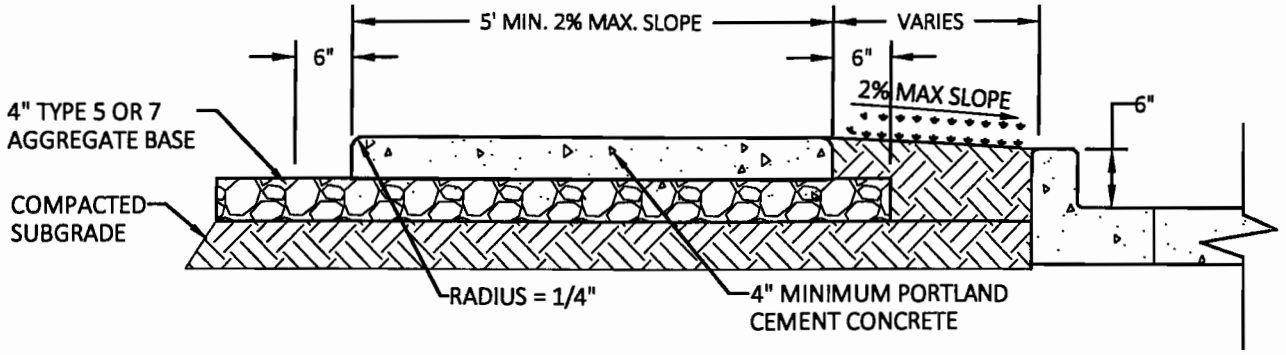

CROSS SECTION

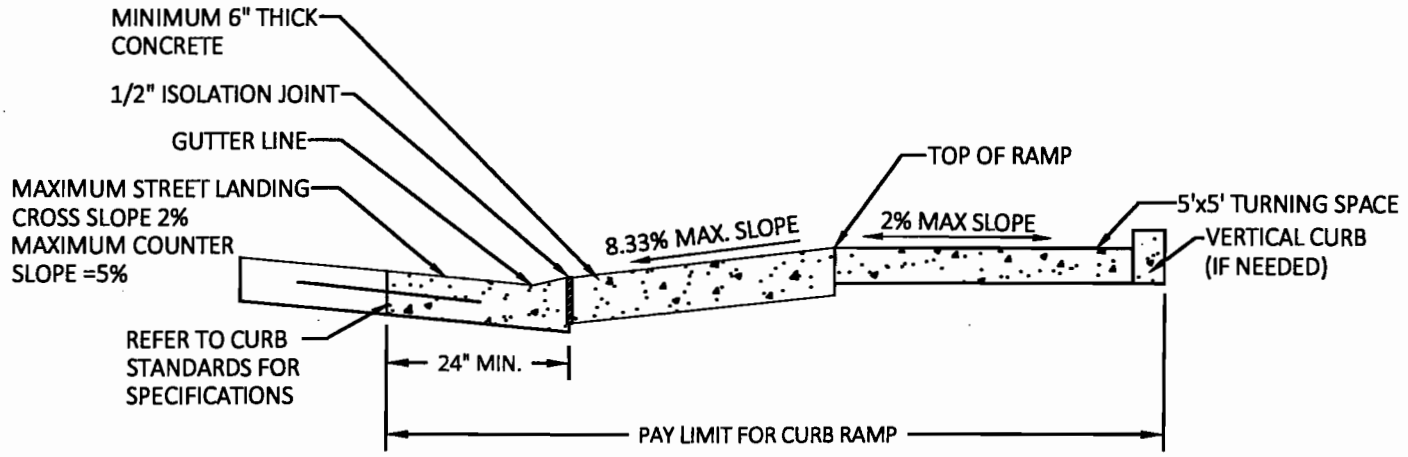

TYPICAL PROFILE

Notes:

1. All work shall be done in accordance with the latest edition of the City of Cape Girardeau Standard Specifications.
2. Curb ramps shall be constructed to the dimensions and finished elevations as specified in the plans and/or contract documents and shall also conform to the requirements of the Americans with Disabilities Act (ADA) and Public Rights-of-Way Accessibility Guidelines (PROWAG).
3. Surface texture of the curb ramp shall be stable, firm, and slip-resistant. The surface shall be medium broomed finish transverse to the slope of the ramp.
4. Care shall be taken to assure an uniform grade on the curb ramp.
5. Longitudinal and transverse joint markings shall not be allowed on the landings or ramps.

STATE OF MISSOURI
CASEY L. BRUNKE
NUMBER
PE-2010018549
PROFESSIONAL ENGINEER
02-25-16

Sidewalk Cross Section and Profile

Prepared By: JH	Scale: NTS	Revisions:
Checked By: TR - DW - JL		
Date: 02-25-2016	Page 25	

CITY of CAPE GIRARDEAU
DEVELOPMENT SERVICES
City Standard Details

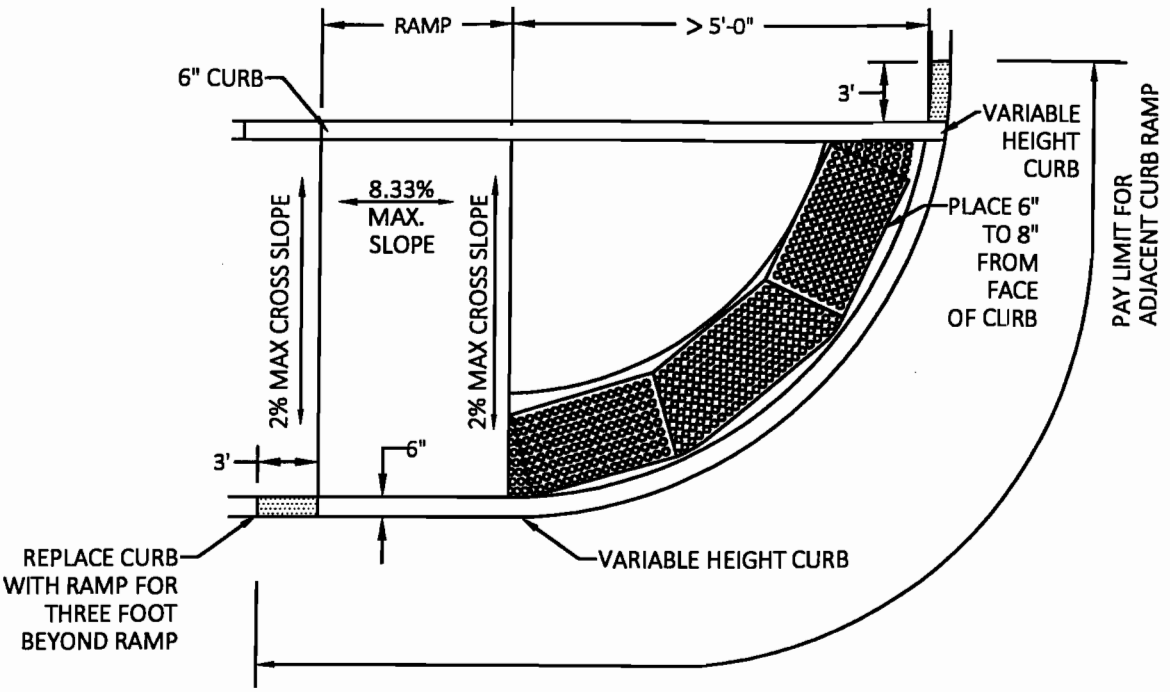

DETECTABLE WARNING LOCATION
IF CURB RAMP MORE THAN FIVE FEET FROM CURB

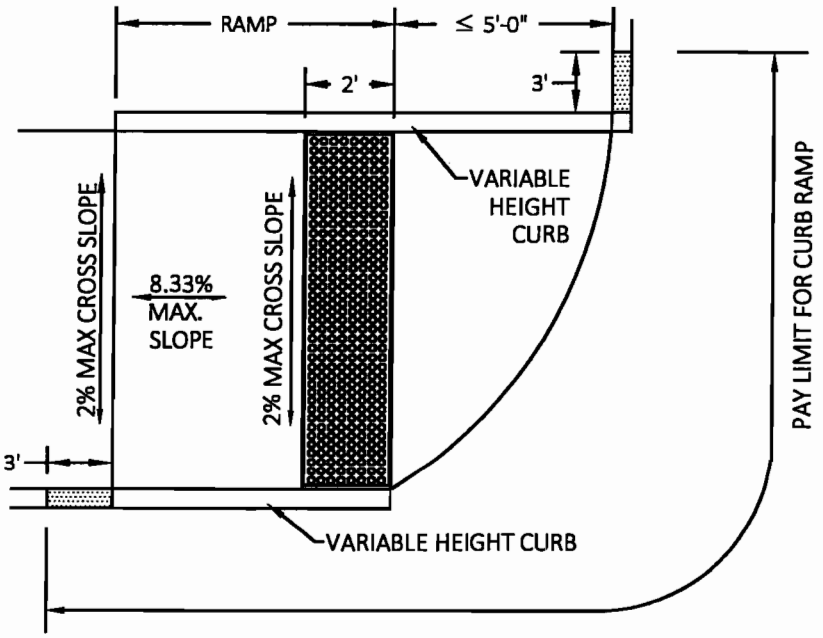

DETECTABLE WARNING LOCATION
IF CURB RAMP FIVE FEET OR LESS THAN FROM CURB

Notes:

1. All work shall be done in accordance with the latest edition of the City of Cape Girardeau Standard Specifications.
2. Cross Slope of landing areas do not exceed two percent in any direction.
3. For retro-fit sidewalk, Pay limits for curb ramps will be the ramp, landing, flares, street curb and gutter replacement across the width of ramp plus three feet each side of the flare or curb limit, sidewalk curbs where necessary, and detectable warnings. All demolition, surface utility work and street filler are incidental to ramp price. Sidewalk transitions are paid as Sidewalk.

STATE OF MISSOURI
CASEY L. BRUNKE
NUMBER
PE-2010018549
PROFESSIONAL ENGINEER
07-25-16

Parallel Curb Ramps with Sidewalk at Back of Curb

Prepared By: JH	Scale: NTS	Revisions:	CITY of CAPE GIRARDEAU DEVELOPMENT SERVICES City Standard Details
Checked By: TR - DW - JL			
Date: 02-25-2016	Page 26		

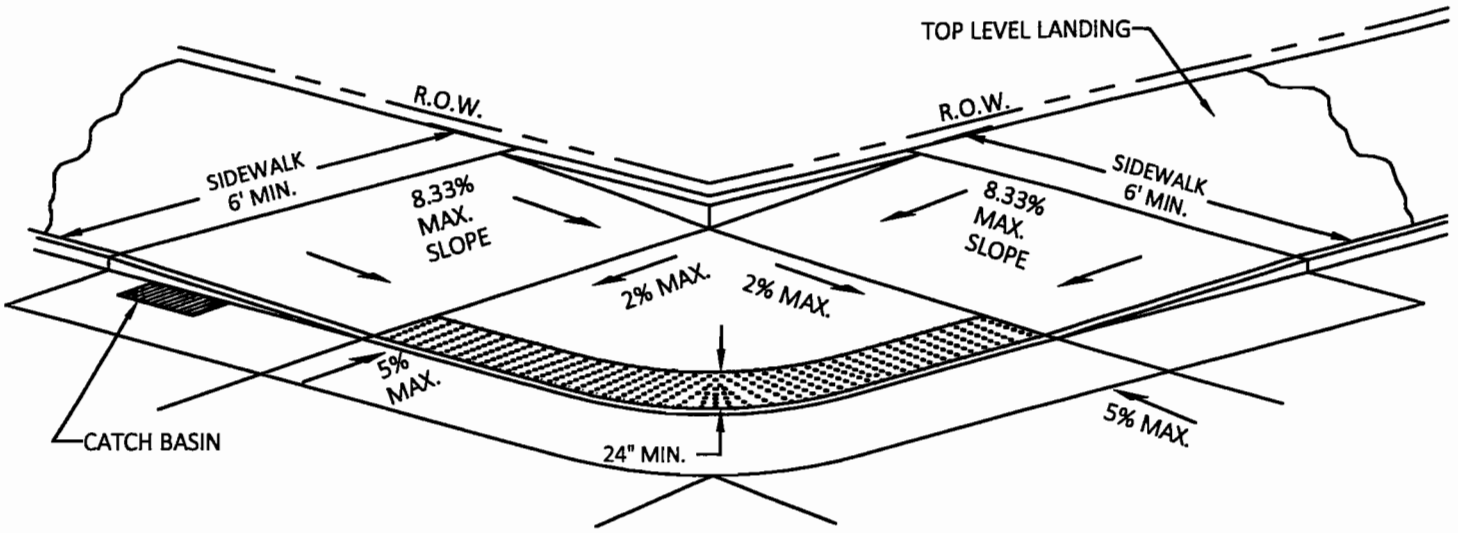

CURB RAMP WITH SIDEWALK AT BACK OF CURB

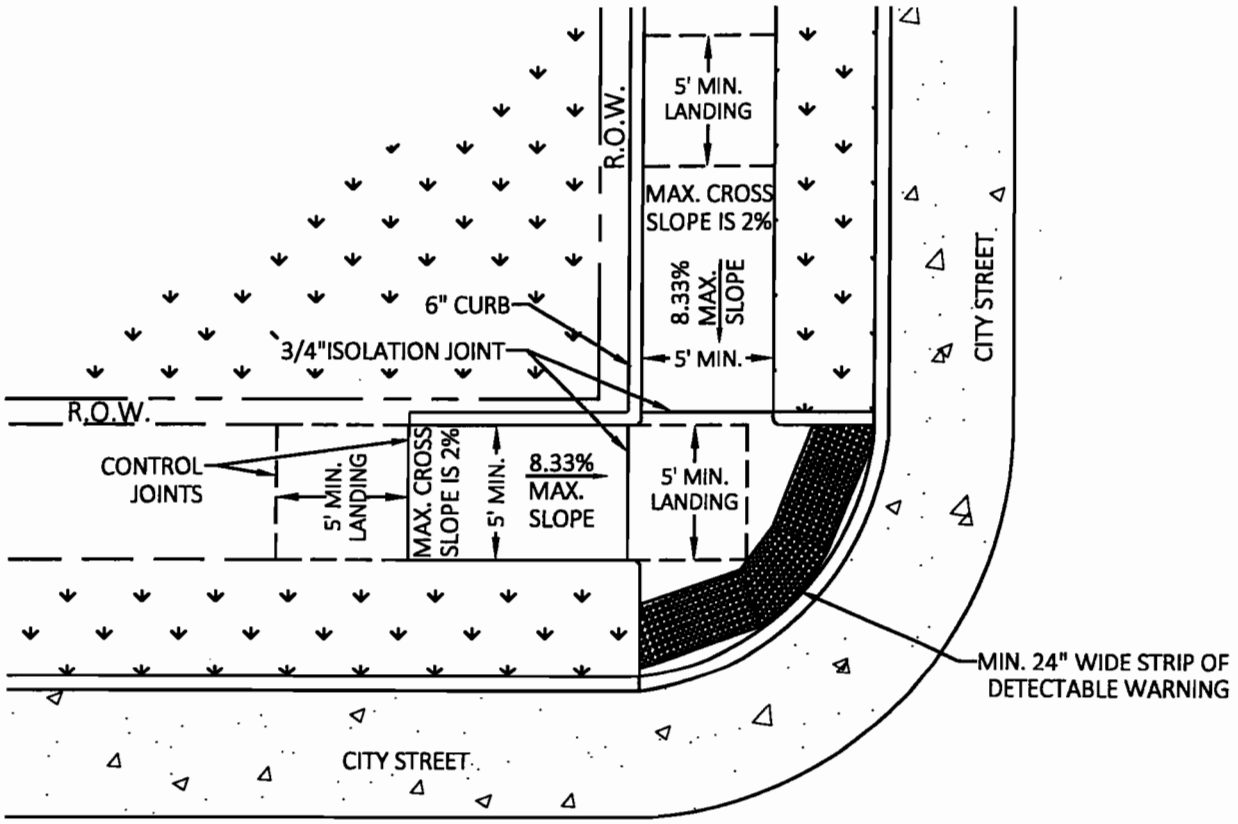

CURB RAMP WITH GREEN AREA

Notes:

1. All work shall be done in accordance with the latest edition of the City of Cape Girardeau Standard Specifications.
2. Cross Slope of landing areas shall not exceed two percent in any direction.
3. For retro-fit sidewalk, Pay limits for curb ramps will be the ramp, landing, flares, street curb and gutter replacement across the width of ramp plus three feet each side of the flare or curb limit, sidewalk curbs where necessary, and detectable warnings. All demolition, surface utility work and street filler are incidental to ramp price. Sidewalk transitions are paid as Sidewalk.

STATE OF MISSOURI
CASEY L. BRUNER
NUMBER
PE-2010018549
PROFESSIONAL ENGINEER
02-25-16

Parallel Curb Ramps

Prepared By: JH	Scale: NTS	Revisions:	CITY of CAPE GIRARDEAU DEVELOPMENT SERVICES City Standard Details
Checked By: TR - DW - JL			
Date: 02-25-2016	Page 27		

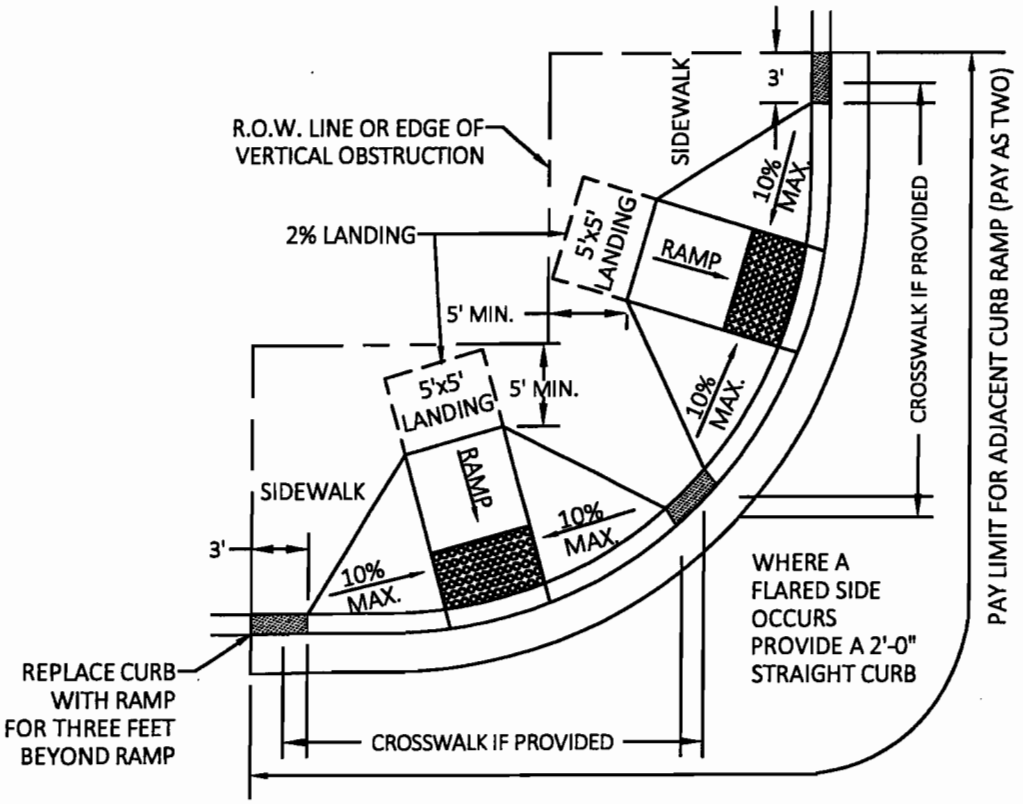

TYPICAL INSTALLATION AT CORNER

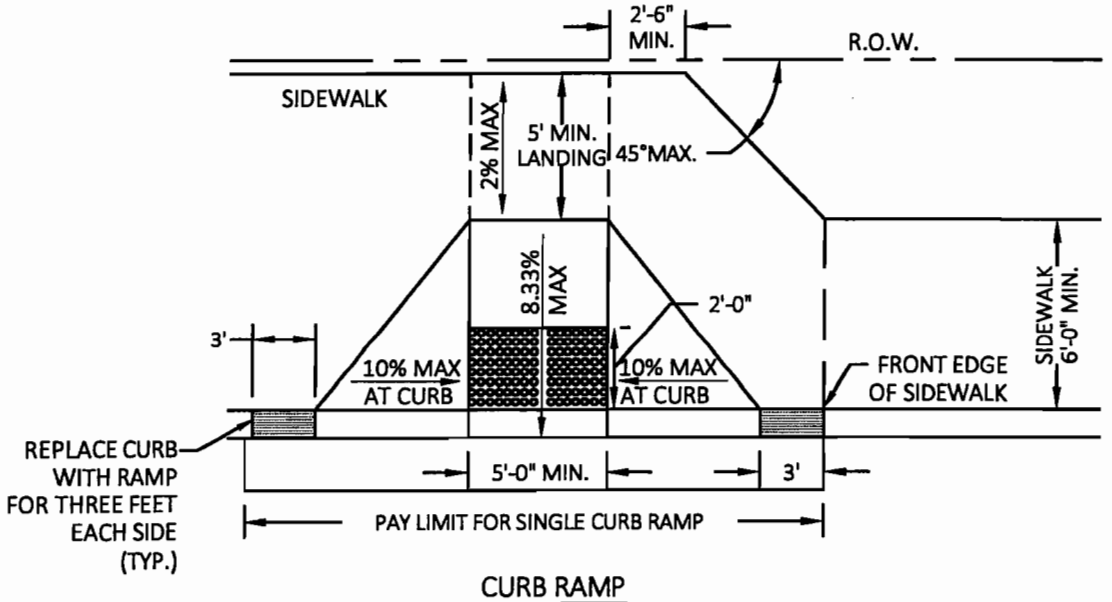

CURB RAMP

Notes:

1. All work shall be done in accordance with the latest edition of the City of Cape Girardeau Standard Specifications.
2. Cross Slope of landing areas shall not exceed two percent in any direction.
3. For retro-fit sidewalk, Pay limits for curb ramps will be the ramp, landing, flares, street curb and gutter replacement across the width of ramp plus three feet each side of the flare or curb limit, sidewalk curbs where necessary, and detectable warnings. All demolition, surface utility work and street filler are incidental to ramp price. Sidewalk transitions are paid as Sidewalk.

STATE OF MISSOURI
CASEY L. BRUNK
NUMBER
PE-2010018549
PROFESSIONAL ENGINEER
02-25-16

Perpendicular Curb Ramps

Prepared By: JH	Scale: NTS	Revisions:	CITY of CAPE GIRARDEAU DEVELOPMENT SERVICES City Standard Details
Checked By: TR - DW - JL			
Date: 02-25-2016	Page 28		

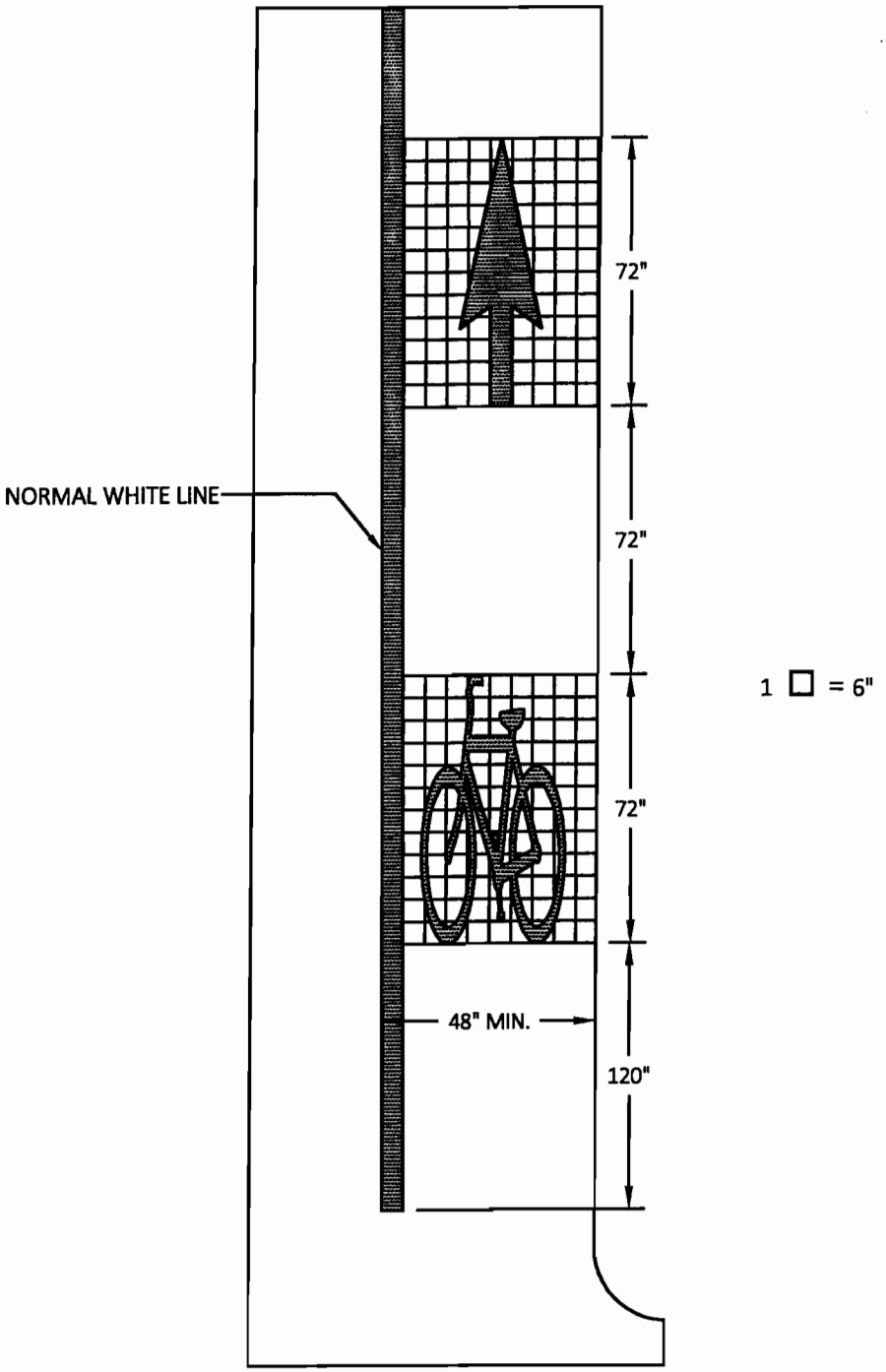

Notes:

1. All work shall be done in accordance with the latest edition of the City of Cape Girardeau Standard Specifications.
2. All pavement markings shall be epoxy paint and conform to the *Missouri Standard Specifications for Highway Construction,* latest edition.
3. Bicycle and arrow are considered one marking.
4. Markings shall be placed ten feet after an intersection and spaced at intervals approximately 500 feet thereafter.
5. Bicycle lane markings shall not be placed in a driveway. If a marking falls in a driveway, the marking shall be moved to the nearest edge of the driveway.
6. Normal white line shall be six inches wide, solid white.
7. Dotted line for bus stops shall be striped white with dashes six inches wide and two feet long with six feet of space between dashes.

STATE OF MISSOURI
CASEY L. BRUNKER
NUMBER
PE-2010018549
PROFESSIONAL ENGINEER
07-25-16

Bicycle Lane Striping

Prepared By: JH	Scale: NTS	Revisions:
Checked By: TR - DW - JL		
Date: 02-25-2016	Page 29	

CITY of CAPE GIRARDEAU
DEVELOPMENT SERVICES
City Standard Details

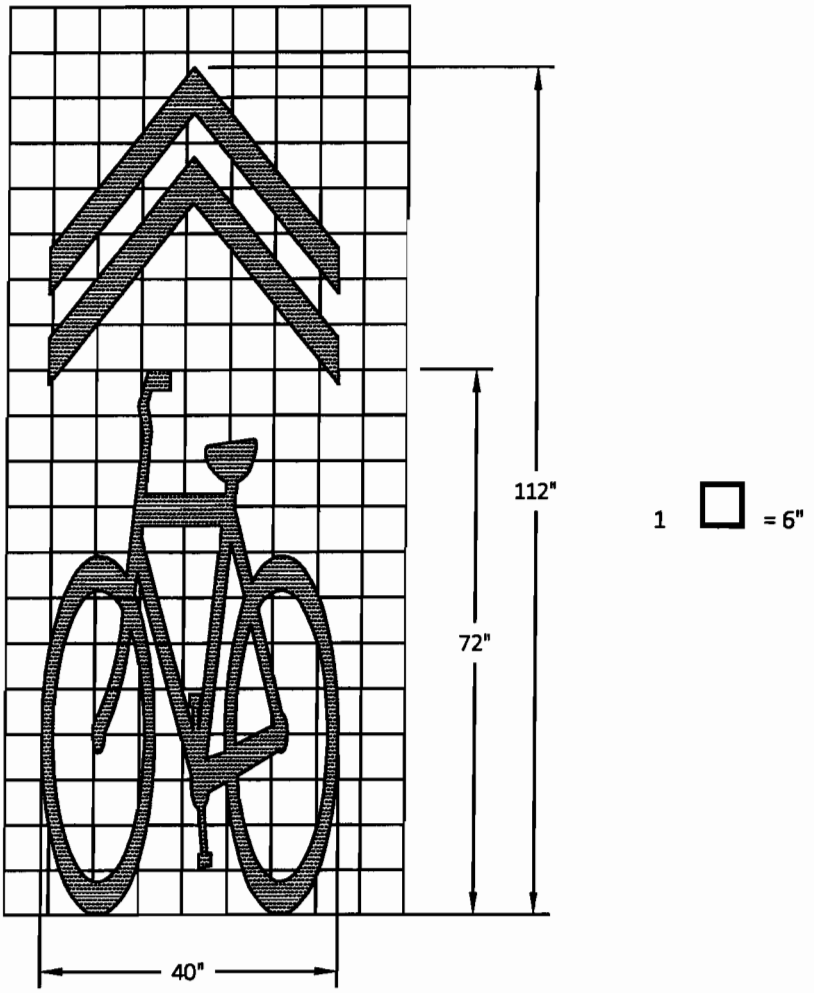

SHARROW

Notes:

1. All work shall be done in accordance with the latest edition of the City of Cape Girardeau Standard Specifications.
2. All pavement markings shall be epoxy paint and conform to the *Missouri Standard Specifications for Highway Construction,* latest edition.
3. Bicycle and chevrons are considered one marking.
4. Markings shall be placed ten feet after an intersection and spaced at intervals approximately 250 feet thereafter.
5. Sharrow markings shall not be placed in a driveway. If a marking falls in a driveway, the marking shall be moved to the nearest edge of the driveway.
6. Sharrows shall be positioned so that the centers of the markings are placed in the center of the travel lane.

STATE OF MISSOURI
CASEY L. BRUNE
NUMBER
PE-2010018549
PROFESSIONAL ENGINEER

Shared Use Arrow (Sharrow)

Prepared By: JH	Scale: NTS	Revisions:	CITY of CAPE GIRARDEAU DEVELOPMENT SERVICES City Standard Details
Checked By: TR - DW - JL			
Date: 02-25-2016	Page 30		

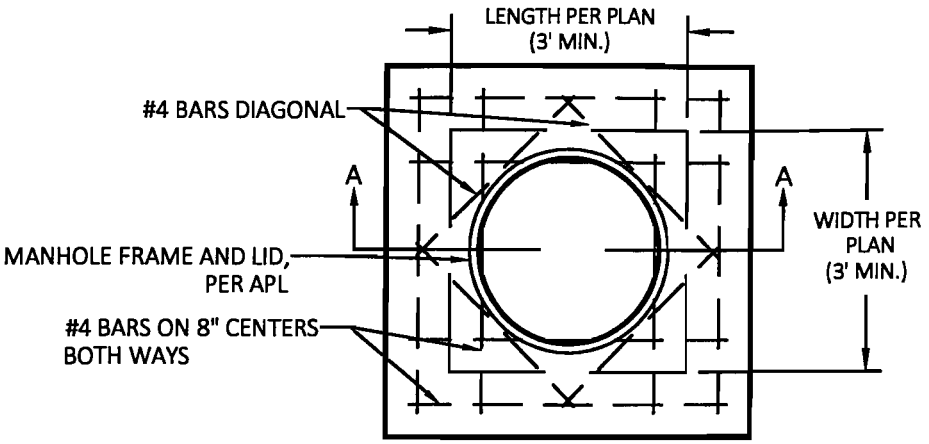

PLAN VIEW

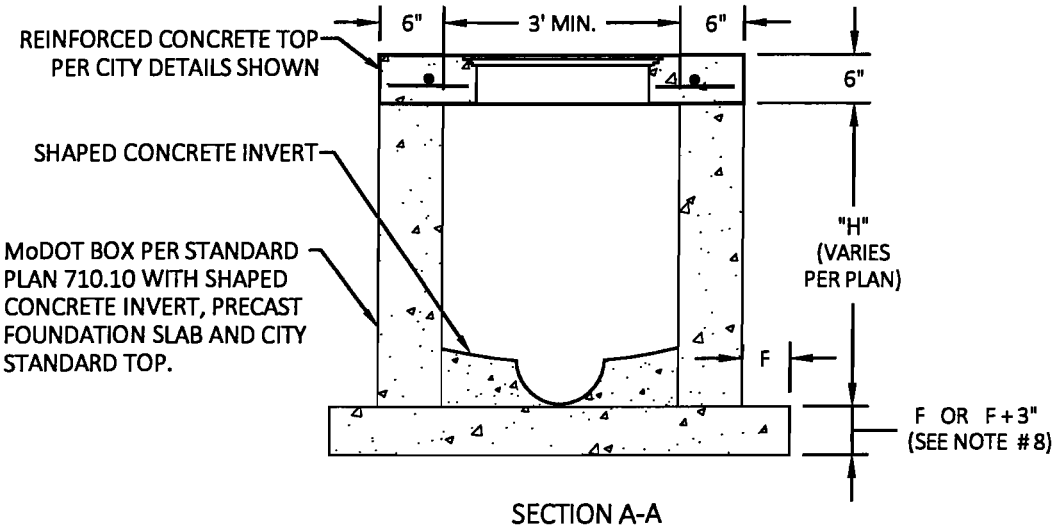

SECTION A-A
(SHOWING CITY OF CAPE GIRARDEAU STANDARD TOP)

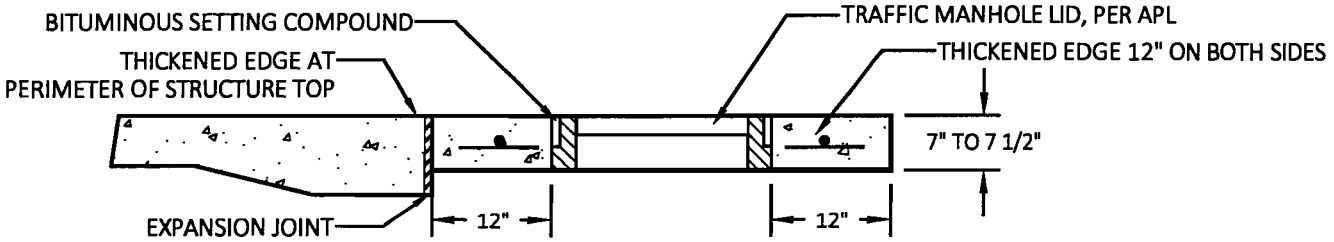

ALTERNATE TOP
(FOR USE UNDER PAVEMENTS ONLY)

Notes:

1. All work shall be done in accordance with the latest edition of the City of Cape Girardeau Standard Specifications.
2. Concrete shall have 28 day minimum strength of 4000 PSI.
3. Reinforced steel shall be Grade 60.
4. Structures where H is greater than eight feet shall be reinforced concrete. (#4 bars at 12" centers, both ways and #4 bars diagonal at pipe openings.)
5. Other than details shown above, the barrel and base sections are to be constructed according to MoDOT Standard Drawing No. 731.10. Do not include steps.
6. All Junction box lids shall have the language "Do Not Dump, Drains to River" or similar language located on a plaque on the lid. See the APL for approved plaques.
7. F = 6" for H </= 6' and 12" for H > 6'. When field placed foundation is used, depth "F" shall be increased by three inches above bottom of box.

STATE OF MISSOURI
CASEY L. BRUNER
NUMBER
PE-2010018549
PROFESSIONAL ENGINEER

Stormwater Junction Box

Prepared By: JH	Scale: NTS	Revisions:	CITY of CAPE GIRARDEAU DEVELOPMENT SERVICES City Standard Details
Checked By: TR - DW - JL			
Date: 02-25-2016	Page 31		

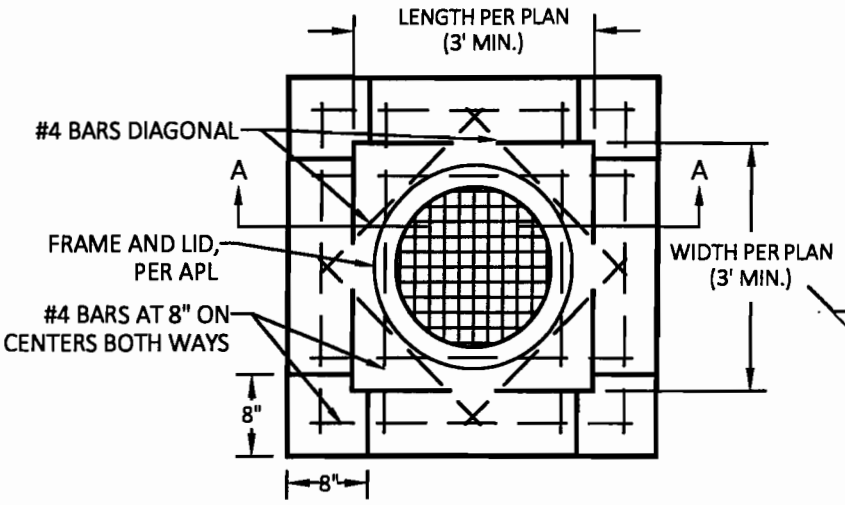

PLAN VIEW

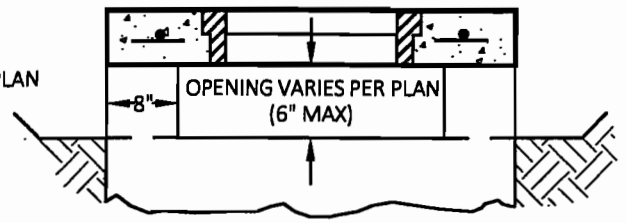

SIDE OPENING DETAIL

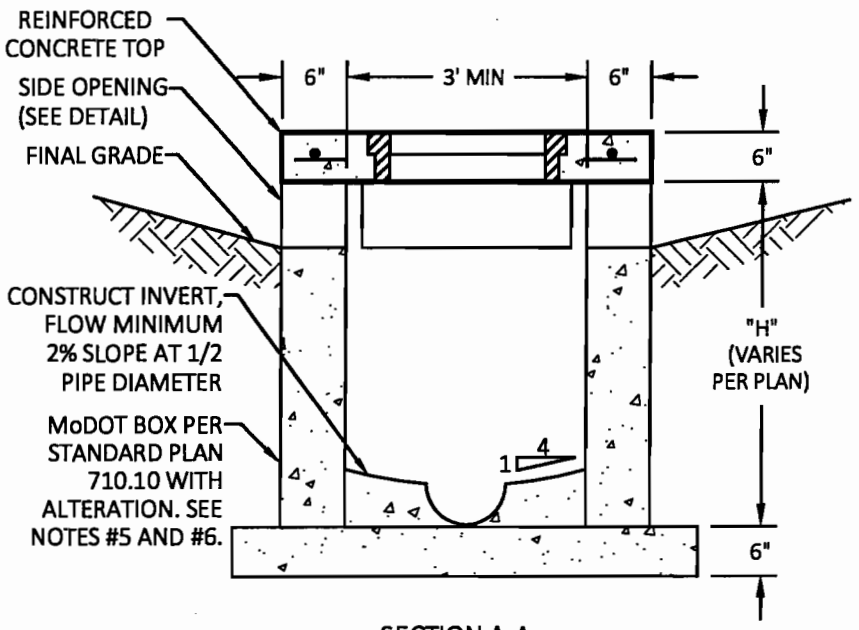

SECTION A-A

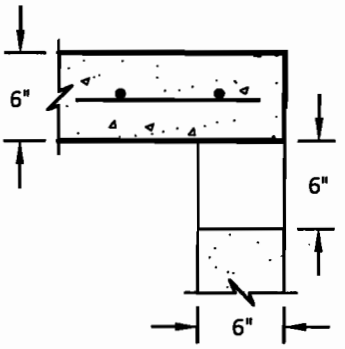

OPENINGS 6"

Notes:

1. All work shall be done in accordance with the latest edition of the City of Cape Girardeau Standard Specifications.
2. Concrete shall have 28 day minimum strength of 4000 PSI.
3. Structures where "H" is greater than eight feet shall be reinforced concrete (#4 bars at 12" centers, both ways and #4 bars diagonal at pipe openings).
4. Other than details shown above, the barrel and base sections are to be constructed according to MoDOT Standard Drawing No. 731.10.
5. Side openings shall be on all four sides per dimensions shown unless noted otherwise on the plan.
6. Steps shall be omitted. Shaped concrete invert shall be added.
7. All box lids shall have the language "Do Not Dump, Drains to River" or similar language located on a plaque on the lid. See the APL for approved plaques.

STATE OF MISSOURI
CASEY L. BRUNK
NUMBER
PE-2010018549
PROFESSIONAL ENGINEER
07-25-16

Area Inlet - Weir Opening

Prepared By: JH	Scale: NTS	Revisions:	CITY of CAPE GIRARDEAU DEVELOPMENT SERVICES City Standard Details
Checked By: TR - DW - JL			
Date: 02-25-2016	Page 32		

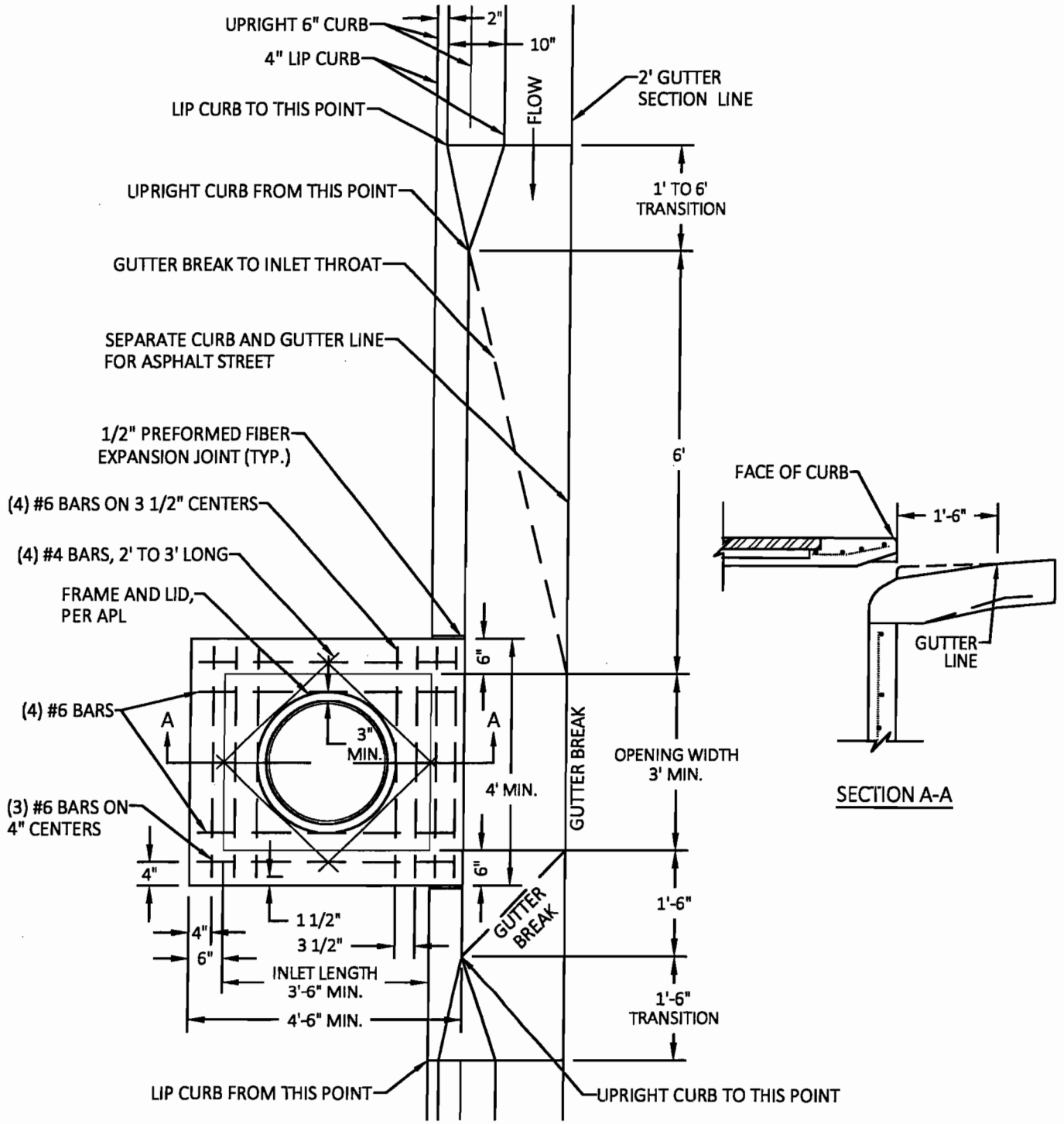

PLAN VIEW

PRECAST DROP INLET (CURB INLET- TYPE T) PER MoDOT STANDARD PLAN 701.10 FOR 4" LIP CURB

Notes:

1. Inlets shall be designed to intercept the gutter flow capacity according to the latest edition of the City of Cape Girardeau Standard Specifications.
2. Inlets shall be constructed according to the plan location and the details shown on this sheet.
3. All inlet pay limit concrete shall have 28 day minimum strength of 4000 PSI.
4. All box lids shall have the language "Do Not Dump, Drains to River" or similar language located on a plaque on the lid. See the APL for approved plaques.

STATE OF MISSOURI
CASEY L. BRUNKEL
NUMBER
PE-2010018549
PROFESSIONAL ENGINEER

Inlet Detail with 4" Lip Curb

Prepared By: JH	Scale: NTS	Revisions:	CITY of CAPE GIRARDEAU DEVELOPMENT SERVICES City Standard Details
Checked By: TR - DW - JL			
Date: 02-25-2016	Page 33		

Thrust Blocks Dimensions							
Tee							
Main	2" to 6"	8" to 12"	8" to 10"	12"	12"	12"	18"
Branch	2" to 6"	2" to 6"	8" to 10"	2" to 6"	8" to 10"	12"	16" to 18"
A	26"	26"	43"	26"	43"	52"	70"
B	26"	26"	43"	26"	43"	52"	70"
C	12"	12"	12"	12"	12"	12"	30"
D	13"	13"	21"	13"	21"	26"	24"
11 1/4° Bend							
Size	*2"*	*4"*	*6"*	*8"*	*10"*	*12"*	*18"*
A	9"	9"	11"	13"	16"	18"	30"
B	9"	9"	11"	13"	16"	18"	30"
C	8"	8"	10"	12"	14"	16"	15"
D	4"	4"	5"	6"	8"	9"	16"
22 1/2° Bend							
Size	*2"*	*4"*	*6"*	*8"*	*10"*	*12"*	*18"*
A	9"	9"	13"	18"	23"	26"	40"
B	9"	9"	13"	18"	23"	26"	40"
C	8"	8"	10"	12"	14"	16"	15"
D	4"	4"	6"	9"	11"	13"	16"
45° Bend							
Size	*2"*	*4"*	*6"*	*8"*	*10"*	*12"*	*18"*
A	12"	12"	18"	24"	31"	37"	52"
B	12"	12"	18"	24"	31"	37"	52"
C	8"	8"	10"	12"	14"	16"	14"
D	6"	6"	9"	12"	15"	18"	18"
90° Bend							
Size	*2"*	*4"*	*6"*	*8"*	*10"*	*12"*	*18"*
A	16"	16"	26"	33"	40"	50"	70"
B	16"	16"	24"	33"	40"	50"	70"
C	9"	9"	12"	12"	15"	16"	22"
D	8"	8"	12"	16"	20"	25"	24"

STATE OF MISSOURI
CASEY L. BRUNKE
NUMBER
PE-2010018549
PROFESSIONAL ENGINEER

Casey Brunke
02-25-16

Horizontal Thrust Block Dimensions

Prepared By: JH	Scale: NTS	Revisions:
Checked By: TR - DW - JL		
Date: 02-25-2016	Page 34	

CITY of CAPE GIRARDEAU
DEVELOPMENT SERVICES
City Standard Details

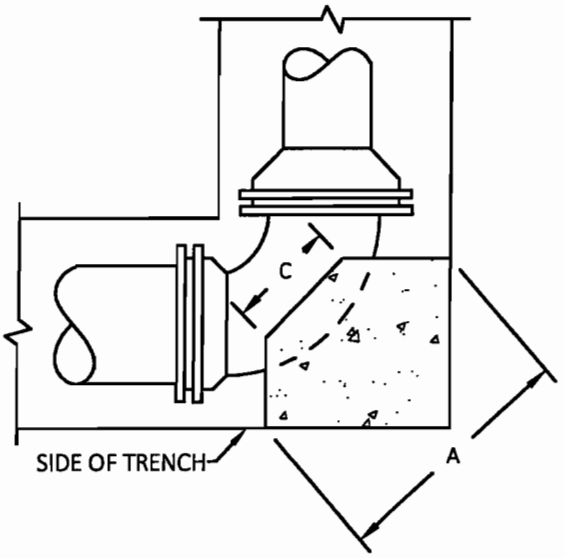

90° BEND

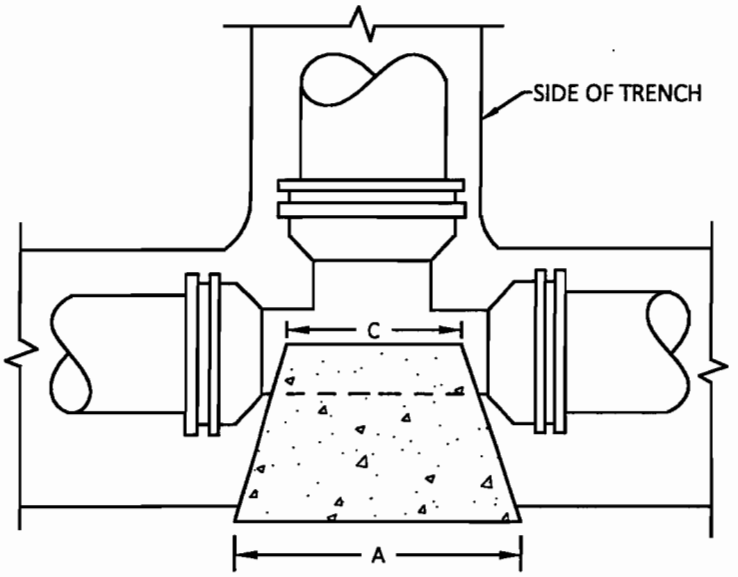

TEE

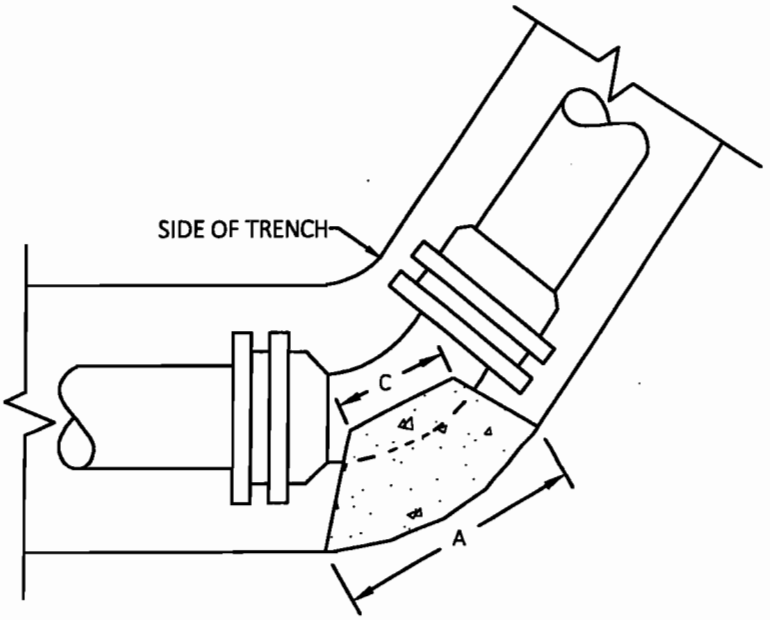

45° OR 22 1/2° OR 11 1/4° BENDS

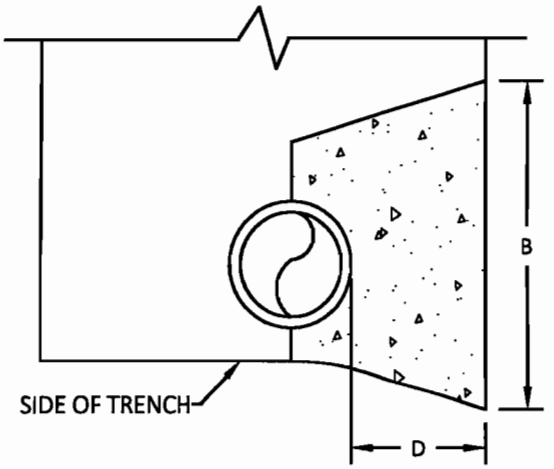

TYPICAL SECTION

Notes:

1. All work shall be done in accordance with the latest edition of the City of Cape Girardeau Standard Specifications.
2. Concrete shall have 28 day minimum strength of 4000 PSI.
3. Thrust blocks to be poured against undisturbed earth.
4. Pipe joints shall remain accessible.

STATE OF MISSOURI
CASEY L. BRUNKE
NUMBER
PE-2010018549
PROFESSIONAL ENGINEER

Casey L. Brunke
02-25-16

Horizontal Bend and Thrust Block

Prepared By: JH	Scale: NTS	Revisions:
Checked By: TR - DW - JL		
Date: 02-25-2016	Page 35	

CITY of CAPE GIRARDEAU
DEVELOPMENT SERVICES
City Standard Details

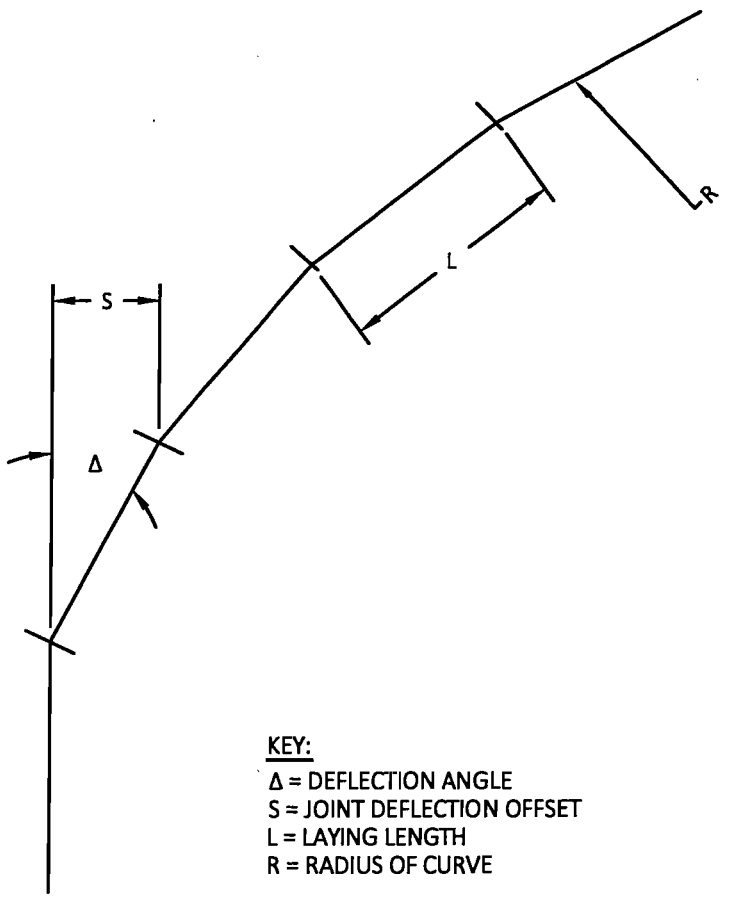

KEY:
Δ = DEFLECTION ANGLE
S = JOINT DEFLECTION OFFSET
L = LAYING LENGTH
R = RADIUS OF CURVE

R= L/(2 TAN (Δ/2))

Specification for Water Main Construction - C900 PVC and DIP					
Nominal Pipe Size	Deflection Angle - Ø	Maximum Offset -S L= 18 Feet	Maximum Offset -S L= 20 Feet	Approximate Radius of Curve -R Produced by Succession of Joints L=18 Feet	Approximate Radius of Curve -R Produced by Succession of Joints L=20 Feet
8"	5°	19"	21"	205'-0"	230'-0"
12"	5°	19"	21"	205'-0"	230'-0"
16"	3°*	11"	12"	340'-0"	380'-0"
20"	3°*	11"	12"	340'-0"	380'-0"
24"	3°*	11"	12"	340'-0"	380'-0"
For 16" and Larger Push-on Joints, Maximum Deflection Angle may be larger than shown above. Consult the Manufacturer.					

STATE OF MISSOURI
CASEY L. BRUNKE
NUMBER
PE-2010018549
PROFESSIONAL ENGINEER
02-25-16

Maximum Joint Deflection - C900 PVC and DIP

Prepared By: JH	Scale: NTS	Revisions:
Checked By: TR - DW - JL		
Date: 02-25-2016	Page 36	

CITY of CAPE GIRARDEAU
DEVELOPMENT SERVICES
City Standard Details

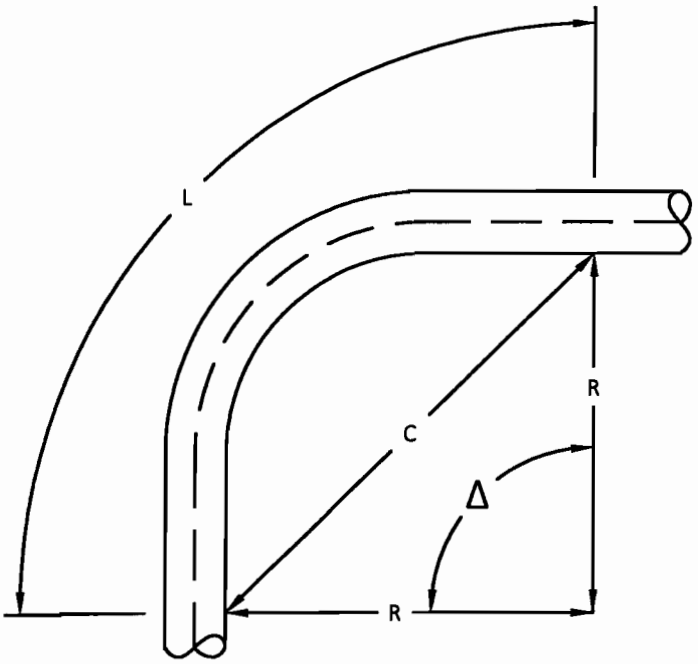

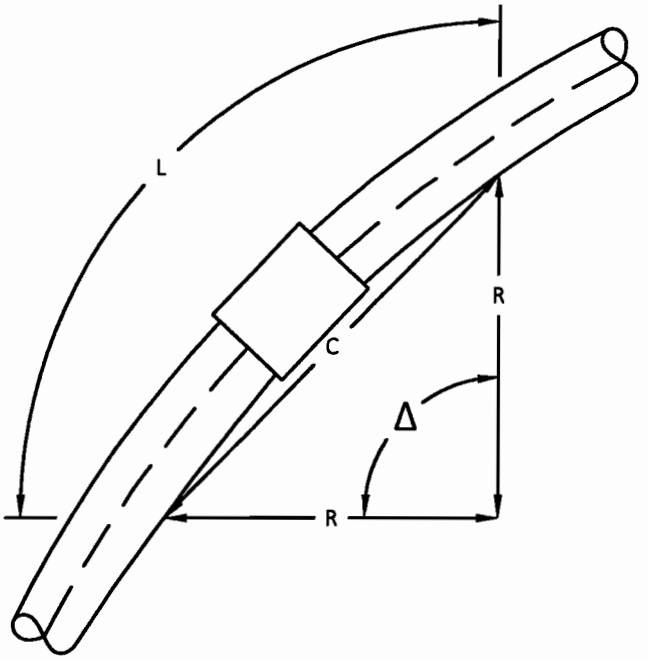

KEY:

D_o = OUTSIDE DIAMETER PIPE (DIP SIZE)
R = MINIMUM RADIUS
L = MINIMUM CURVE LENGTH, IF Δ = 90°
C = MINIMUM CHORD LENGTH, IF Δ = 90°

Without Fittings			
Nominal "D_o"	R = 25 D_o	L	C
8"	18'-10"	29'-7"	26'-6"
12"	27'-6"	43'-2"	38'-11"
14"	31'-10"	50'-1"	45'-1"
16"	36'-3"	56'-11"	51'-3"

With Fittings			
Nominal "D"	R = 100D_o	L	C
8"	75'-4"	118'-6"	106'-8"
12"	110'-0"	172'-10"	155'-6"
14"	127'-6"	200'-3"	180'-4"
16"	145'-0"	227'-9"	205'-0"

Notes:
Table values apply to DR=11 and DR=13.5 only.

STATE OF MISSOURI
CASEY L. BRUNE
NUMBER
PE-2010018549
PROFESSIONAL ENGINEER

Minimum Bending Radius for Polyethylene Water Pipe

Prepared By: JH	Scale: NTS	Revisions:
Checked By: TR - DW - JL		
Date: 02-25-2016	Page 37	

CITY of CAPE GIRARDEAU
DEVELOPMENT SERVICES
City Standard Details

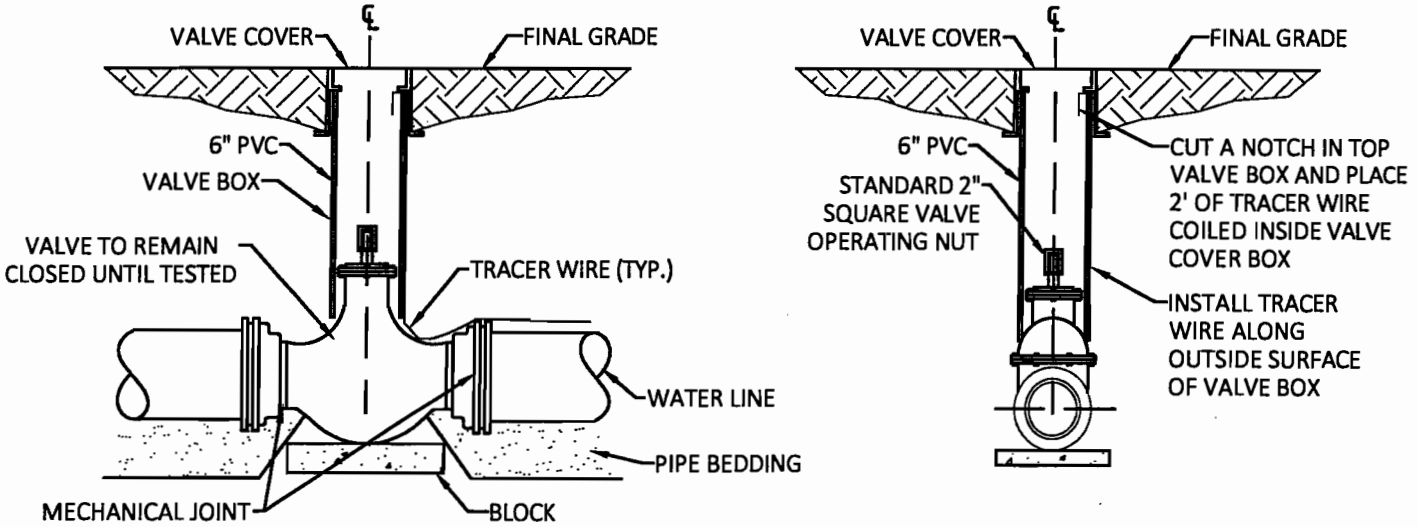

VALVE AND VALVE BOX

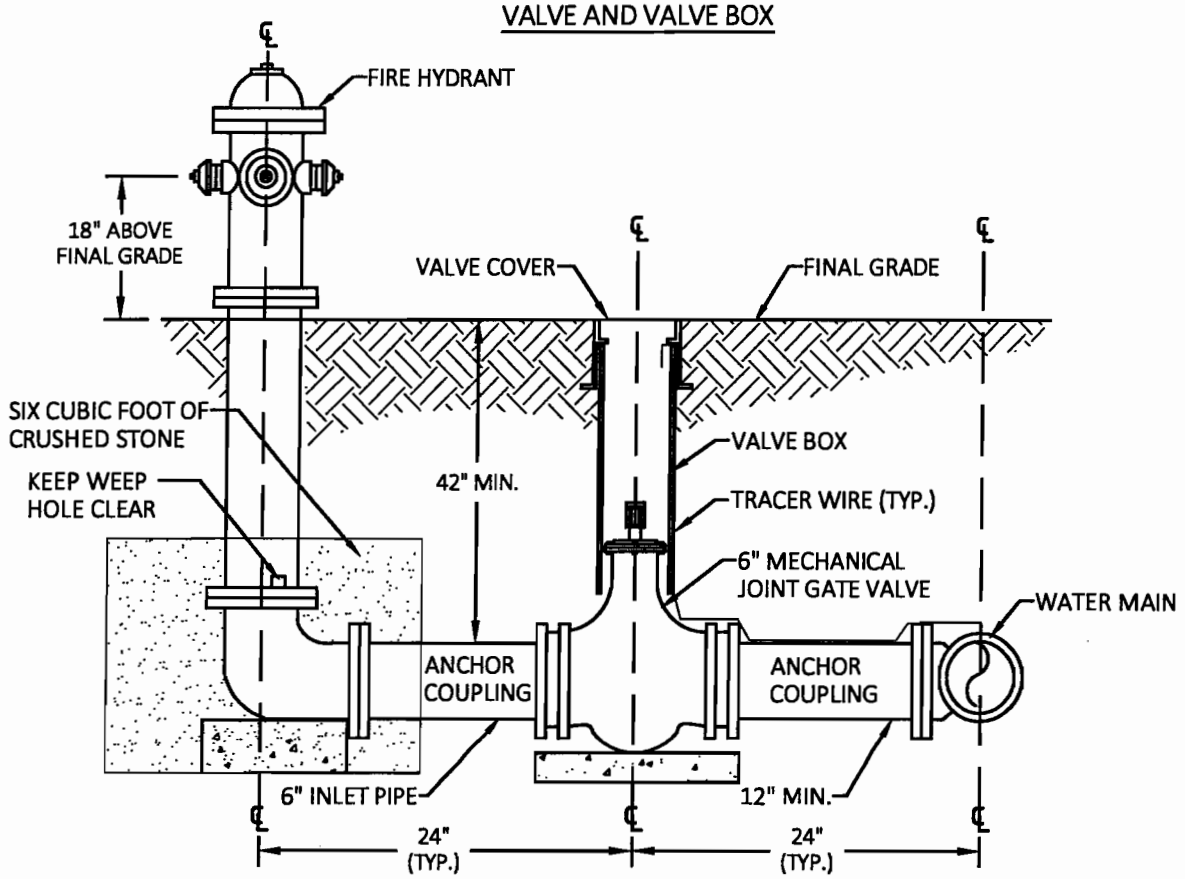

FIRE HYDRANT INSTALLATION

Notes:

1. All work shall be done in accordance with the latest edition of the City of Cape Girardeau Standard Specifications.
2. Hydrants shall be oriented with the pumper outlet perpendicular to the curb which faces the street.
3. The center of a hose outlet shall not be less than 18 inches above final grade and so that the final hydrant installation is compatible with the final grade elevation and plumb.
4. A clearance space of at least three feet (3 ft.) surrounding the hydrant body shall be provided around every hydrant.
5. Utility poles, vaults, walls, plants, and other landscape materials shall be kept outside the hydrant's clearance space.
6. Bedding for DI, PVC, and HDPE Pressure Pipe to be flat bottom trench, backfill as shown (except for special backfill areas designated by specifications; i.e. driveways, streets, sidewalks, etc.).

STATE OF MISSOURI
CASEY L. BRUNKE
NUMBER PE-2010018549
PROFESSIONAL ENGINEER

Fire Hydrant Connection

Prepared By: JH	Scale: NTS	Revisions:
Checked By: TR - DW - JL		
Date: 02-25-2016	Page 38	

CITY of CAPE GIRARDEAU
DEVELOPMENT SERVICES
City Standard Details

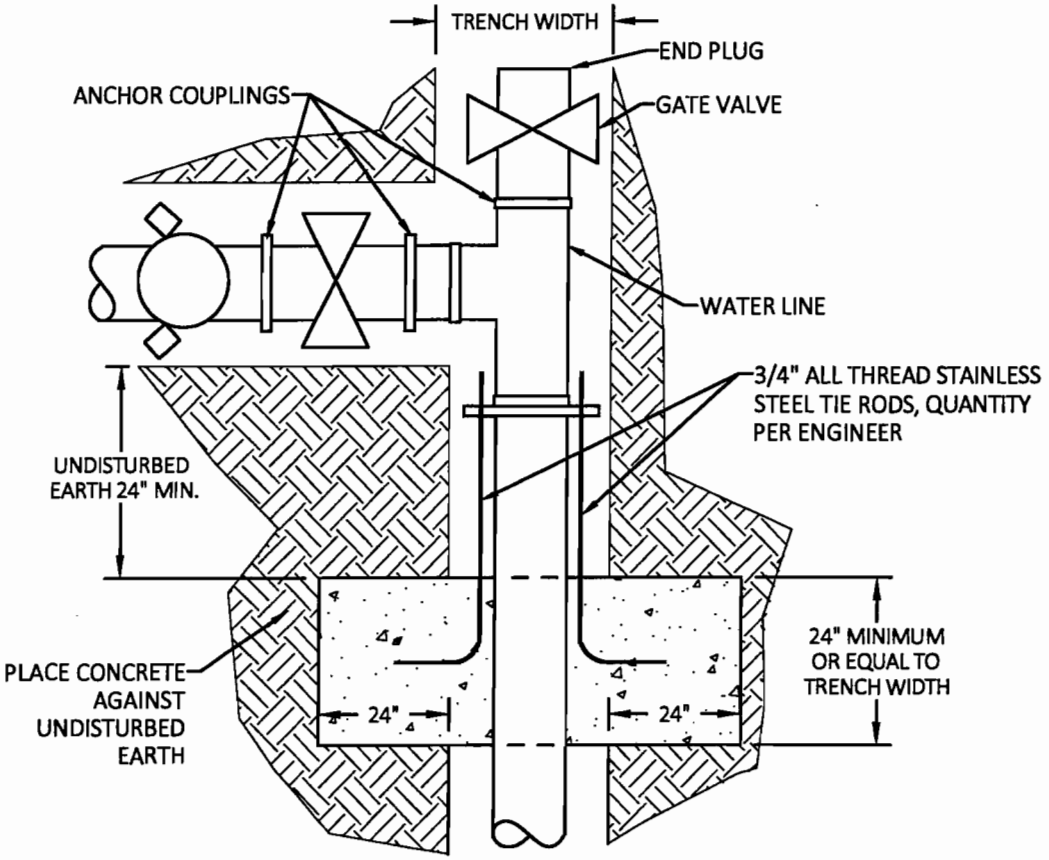

TOP VIEW

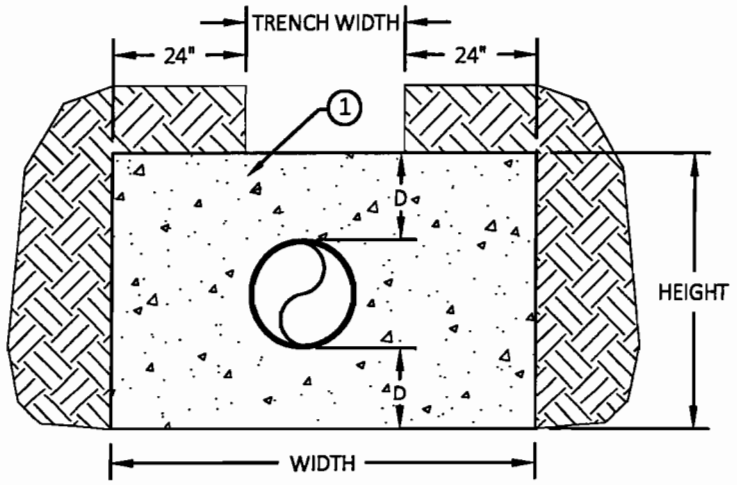

FRONT VIEW

Material:

1. Concrete Straddle Block

Pipe Size (IN)	D MIN.(IN)
8	7
12	15

Notes:

1. All work shall be done in accordance with the latest edition of the City of Cape Girardeau Standard Specifications.
2. Concrete shall have 28 day minimum strength of 4000 PSI.
3. For pipe sizes larger than 12 inches straddle blocks shall be designed individually by the Engineer and shall be based on the following:
   a. 200 PSI Water pressure
   b. Soil bearing capacity, steel size, and spacing by the Engineer.
4. Bearing area of block shall be against undisturbed soil.
5. Straddle Block and pipe shall have a minimum of 18" cover.
6. All fittings within the concrete shall be wrapped in plastic.
7. Joint restraint devices shall be used in lieu of thrust blocks at all vertical bend locations (down bends and up bends). The devices shall extend a minimum of three pipe joints (57 feet) each direction for the bend or as otherwise directed in the manufacturer's recommendations.

STATE OF MISSOURI
CASEY L. BRUNKE
NUMBER PE-2010018549
PROFESSIONAL ENGINEER
02-25-16

Standard Straddle Block

Prepared By: JH	Scale: NTS	Revisions:
Checked By: TR - DW - JL		
Date: 02-25-2016	Page 39	

CITY of CAPE GIRARDEAU
DEVELOPMENT SERVICES
City Standard Details

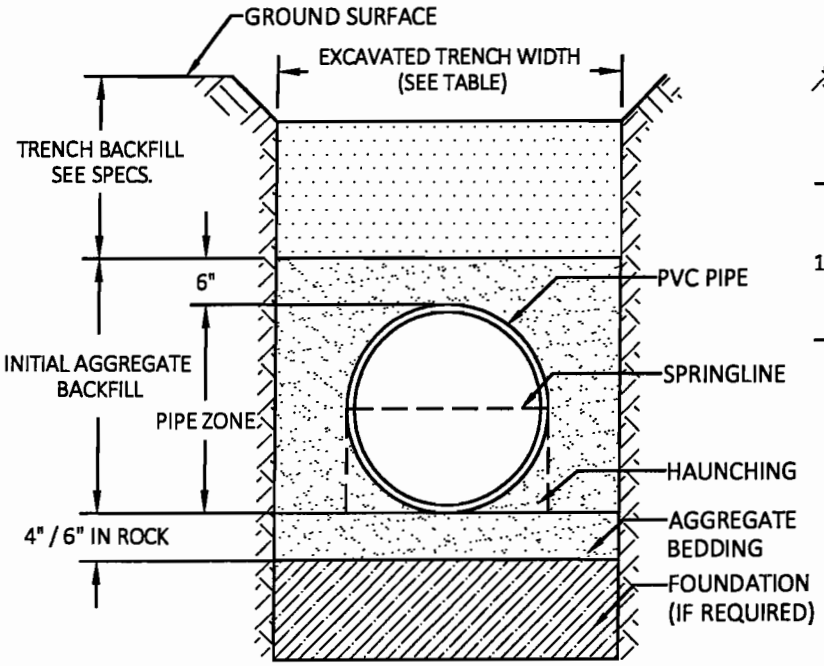

GRAVITY SEWER BEDDING

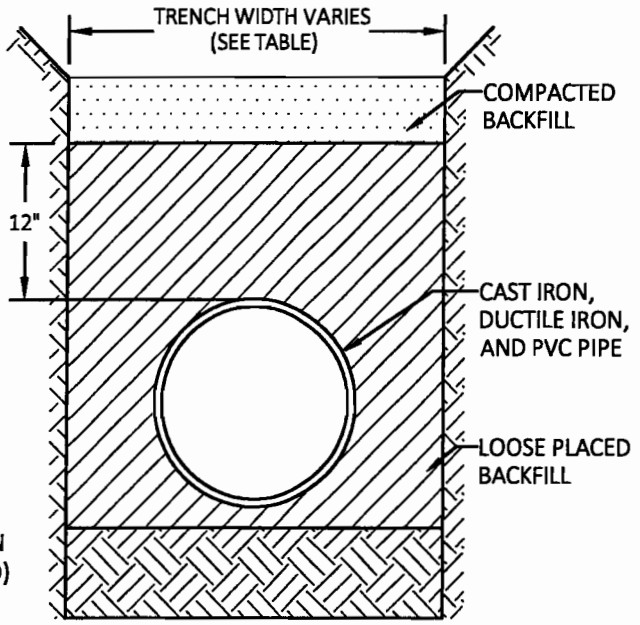

PRESSURE PIPE BEDDING

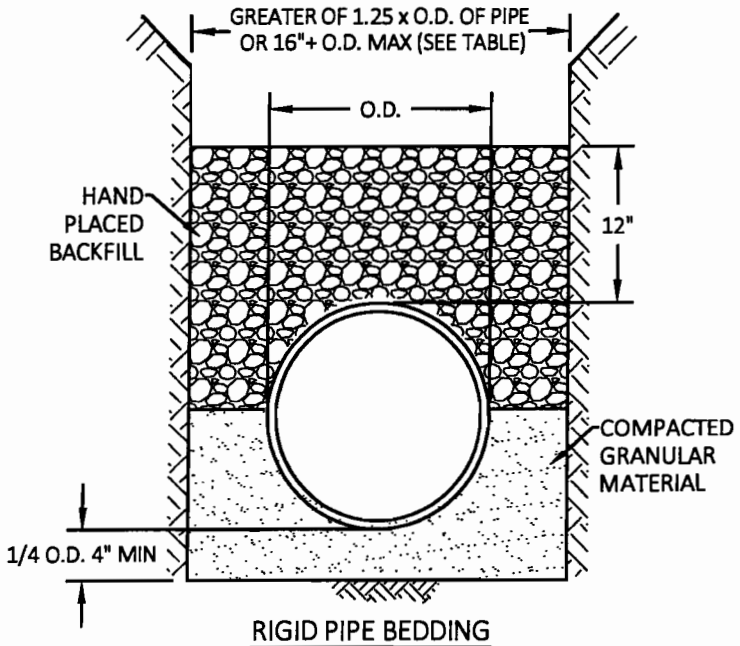

RIGID PIPE BEDDING
(CLASS B)

Flexible Pipe	
Pipe Size (IN)	Trench Width (IN) MIN.
4	20
6	22
8	24
10	26
12	28
15	31
18	35
21	39
24	42

Notes:

1. All work shall be done in accordance with the latest edition of the City of Cape Girardeau Standard Specifications.
2. See specifications for aggregate, initial backfill, and trench backfill.

STATE OF MISSOURI
CASEY L. BRUNKE
NUMBER
PE-2010018549
PROFESSIONAL ENGINEER
02-25-16

Pipe Bedding - Sewer, Pressure, and Rigid Pipe

Prepared By: JH	Scale: NTS	Revisions:
Checked By: TR - DW - JL		
Date: 02-25-2016	Page 40	

CITY of CAPE GIRARDEAU
DEVELOPMENT SERVICES
City Standard Details

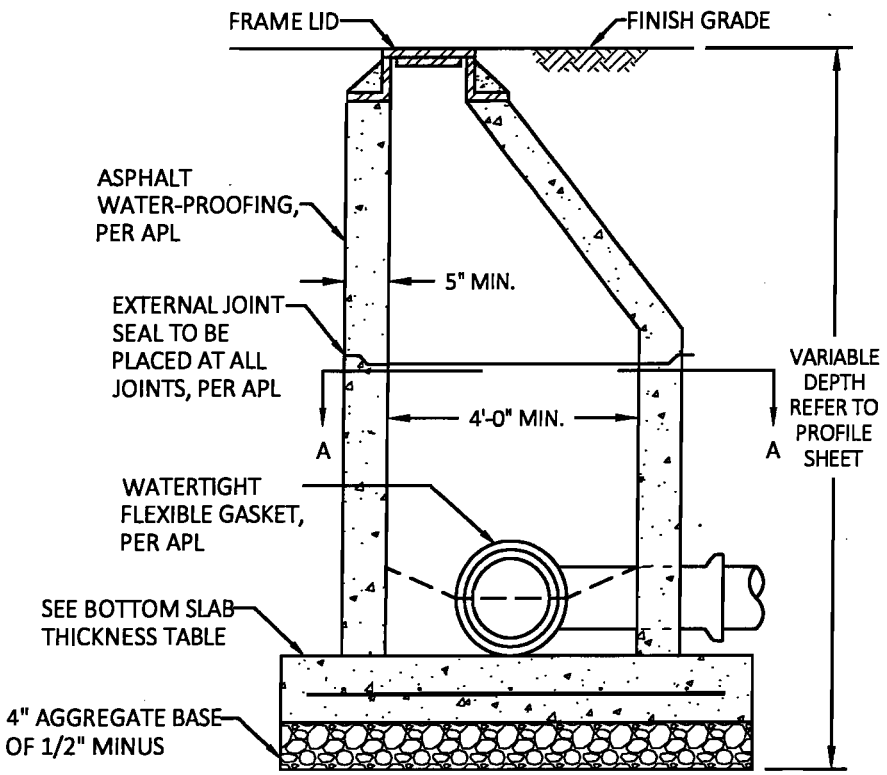

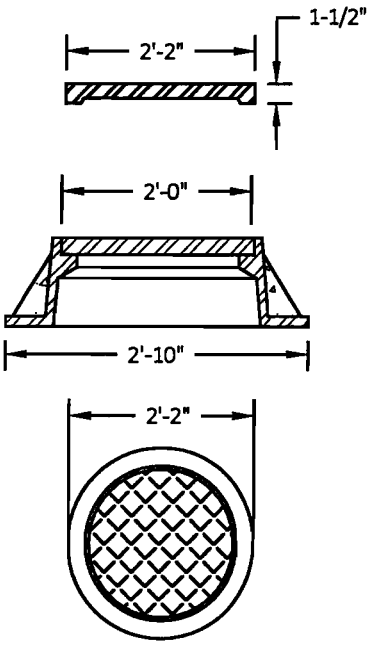

MANHOLE FRAME AND LID (PER APL)

Bottom Slab Concrete	
Thickness	Steel
8"	#4 - 12" O.C. Each Way

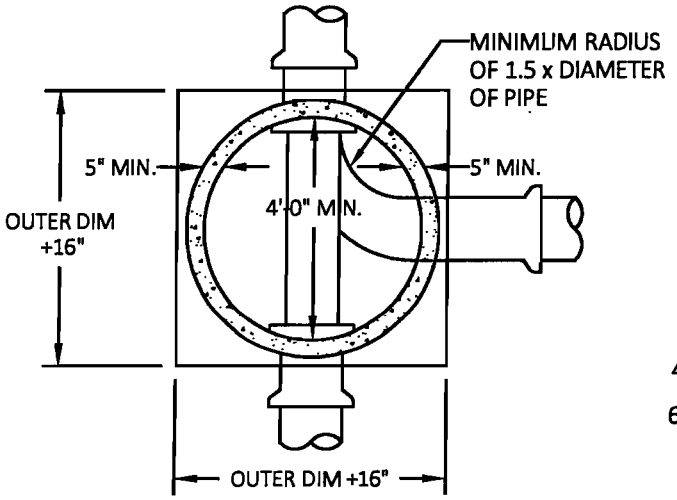

SECTION A-A

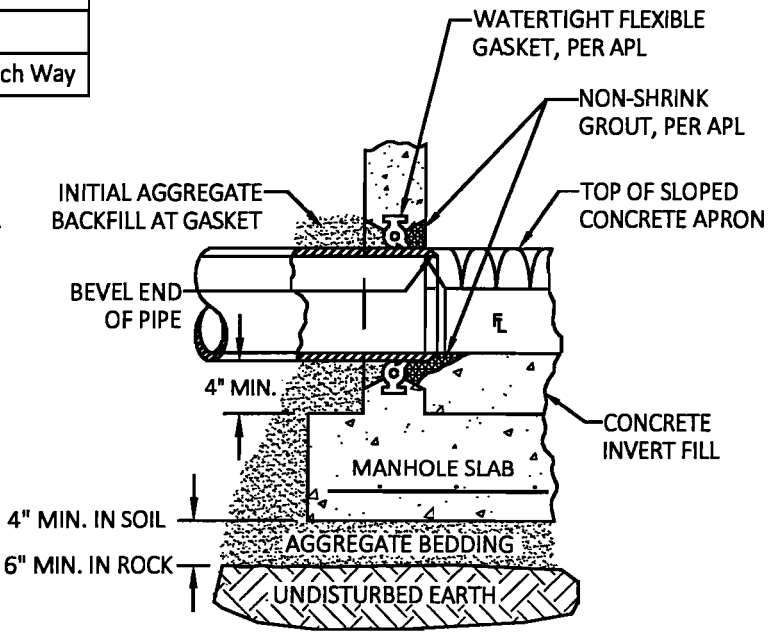

MANHOLE PIPE GASKET

Notes:

1. All work shall be done in accordance with the latest edition of the City of Cape Girardeau Standard Specifications.
2. Manhole structures shall be precast and conform to ASTM C478, except as modified by the specifications.
3. The pipe gasket for precast manholes with boxouts shall be watertight flexible rubber gasket or a waterstop between pipe and wall completely grouted with non-shrinking grout, per APL.
4. Asphalt waterproofing on exterior surface of manhole shall not come in contact with pipe gasket.
5. When a manhole is used for storm sewer a watertight flexible rubber gasket is not required.
6. Outlet pipe invert shall be 0.1 foot lower than the lowest inlet pipe.
7. Pipe may project one inch maximum past inside wall of manhole.

STATE OF MISSOURI
CASEY L. BRUNK
NUMBER
PE-2010018549
PROFESSIONAL ENGINEER
02-25-16

Standard Sanitary Manhole with Frame and Lid

Prepared By: JH	Scale: NTS	Revisions:	CITY of CAPE GIRARDEAU DEVELOPMENT SERVICES City Standard Details
Checked By: TR - DW - JL			
Date: 02-25-2016	Page 41		

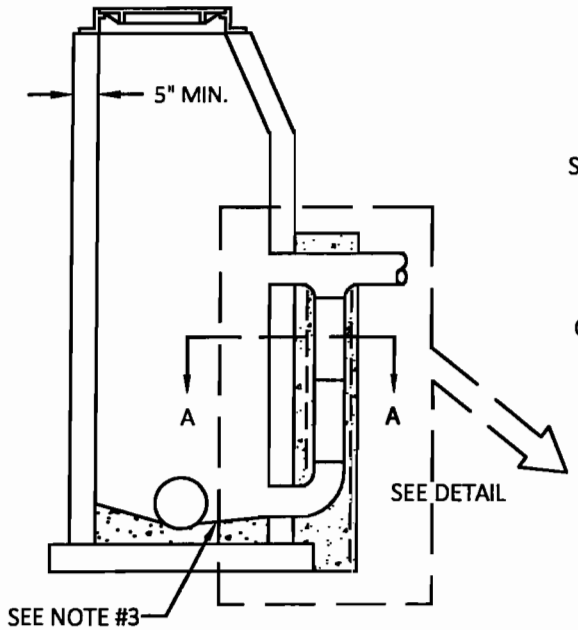

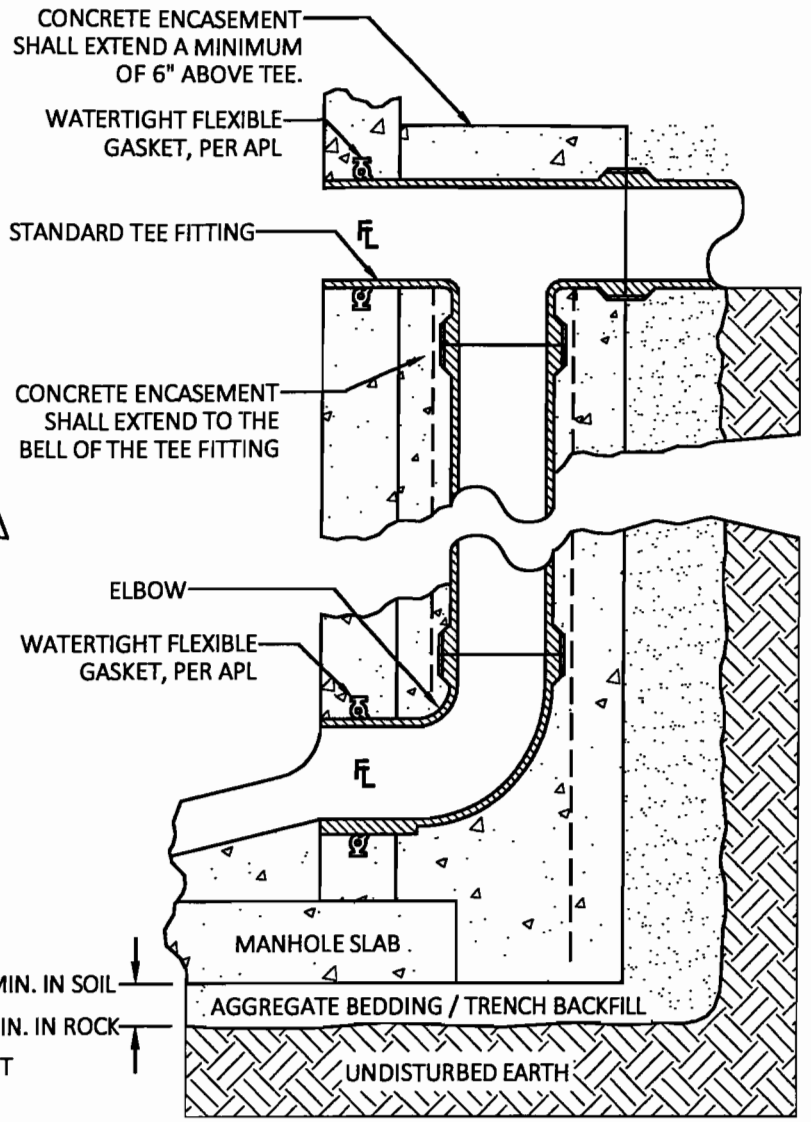

SECTION DETAIL AT DROP

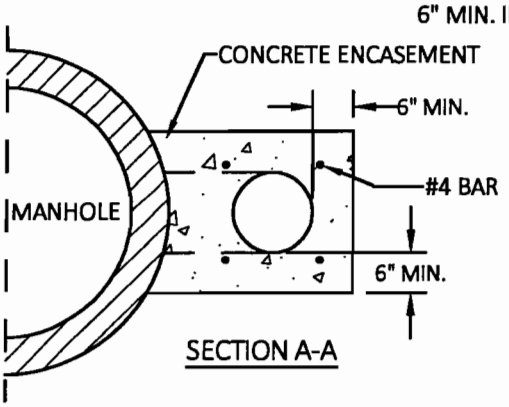

SECTION A-A

Notes:

1. All work shall be done in accordance with the latest edition of the City of Cape Girardeau Standard Specifications.
2. Manhole structures shall be precast and conform to ASTM C478, except as modified by the specifications.
3. Use Drop Manhole if elevation difference of inflow and outflow is greater than two feet.
4. Outlet pipe invert shall be 0.1 foot lower than the lowest inlet pipe.
5. Drop inlet pipe to be same size and material as sewer main.
6. Alignment of tee: Drop inlet pipe and elbow may be adjusted to maximum of 5% deflection to compensate for slope of sewer line.

STATE OF MISSOURI
CASEY L. BRUNCK
NUMBER
PE-2010018549
PROFESSIONAL ENGINEER
02-25-16

Drop Manhole

Prepared By: JH	Scale: NTS	Revisions:	CITY of CAPE GIRARDEAU DEVELOPMENT SERVICES City Standard Details
Checked By: TR - DW - JL			
Date: 02-25-2016	Page 42		

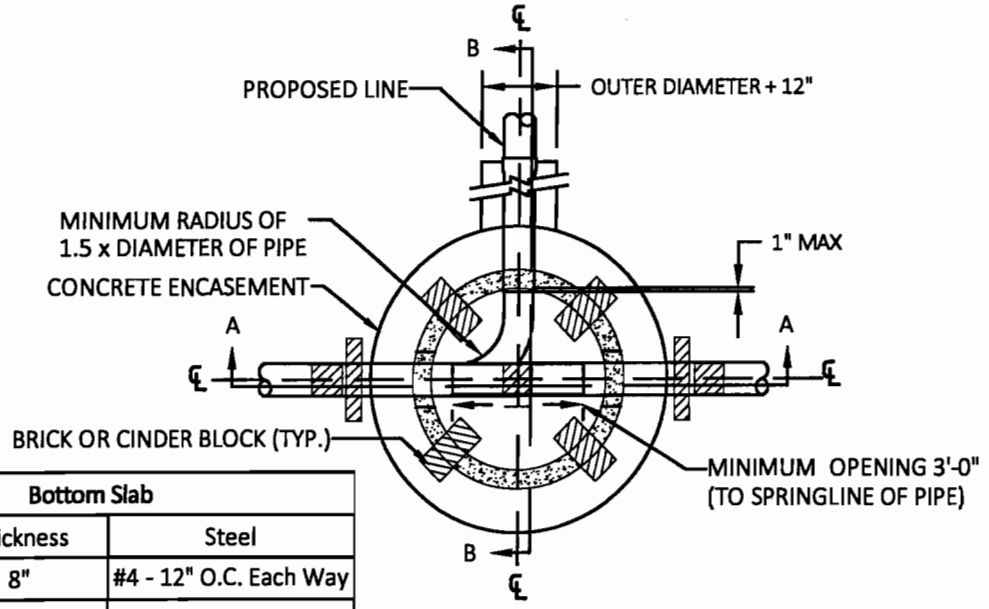

HORIZONTAL SECTION

Bottom Slab		
Depth	Thickness	Steel
0'-10'	8"	#4 - 12" O.C. Each Way
10'-16'	8"	#4 - 12" O.C. Each Way
16'- Over	Special Design	Special Design

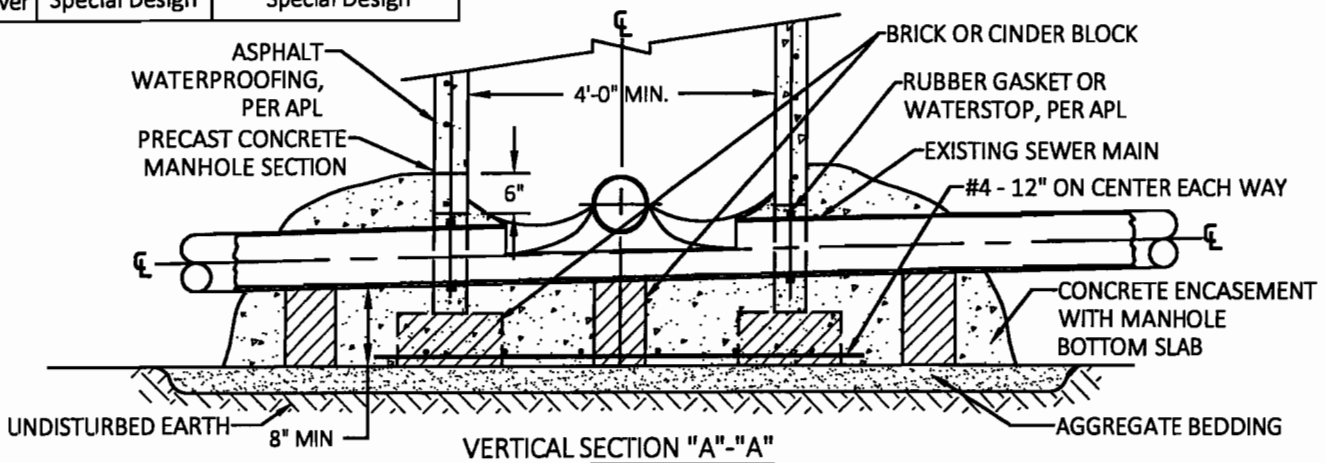

VERTICAL SECTION "A"-"A"

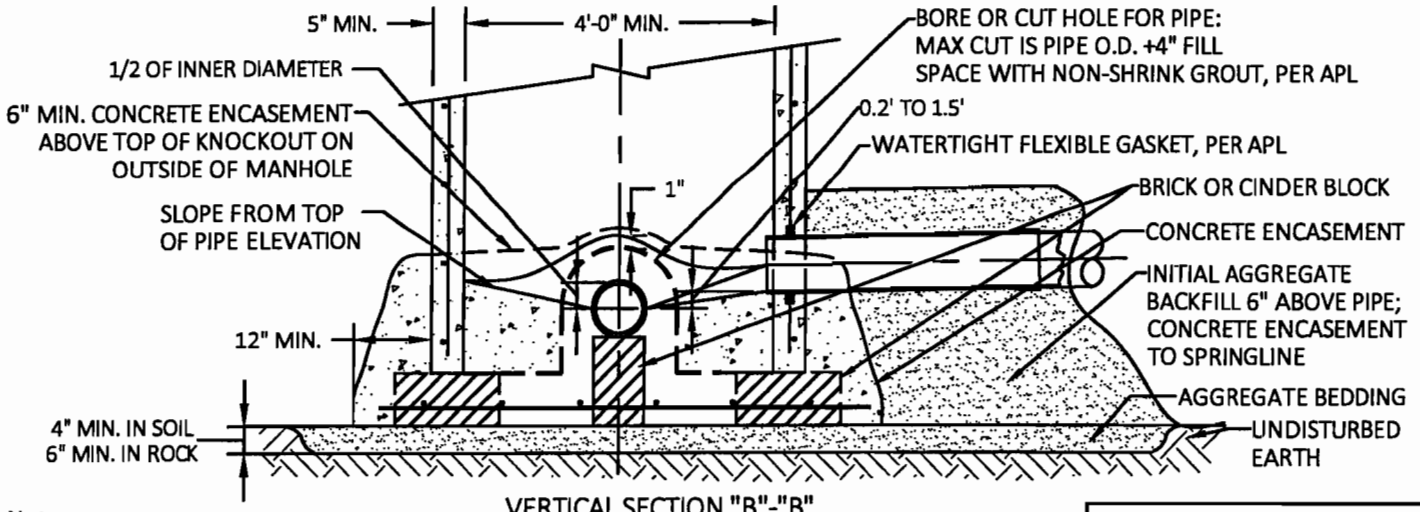

VERTICAL SECTION "B"-"B"

Notes:

1. All work shall be done in accordance with the latest edition of the City of Cape Girardeau Standard Specifications.
2. Manhole structures shall be precast and conform to ASTM C478, except as modified by the specifications.
3. Existing main segment replacement at discretion of Engineer.

STATE OF MISSOURI
CASEY L. BRUNKE
NUMBER
PE-2010018549
PROFESSIONAL ENGINEER
02-25-16

Doghouse Manhole

Prepared By: JH	Scale: NTS	Revisions:
Checked By: TR - DW - JL		
Date: 02-25-2016	Page 43	

CITY of CAPE GIRARDEAU
DEVELOPMENT SERVICES
City Standard Details

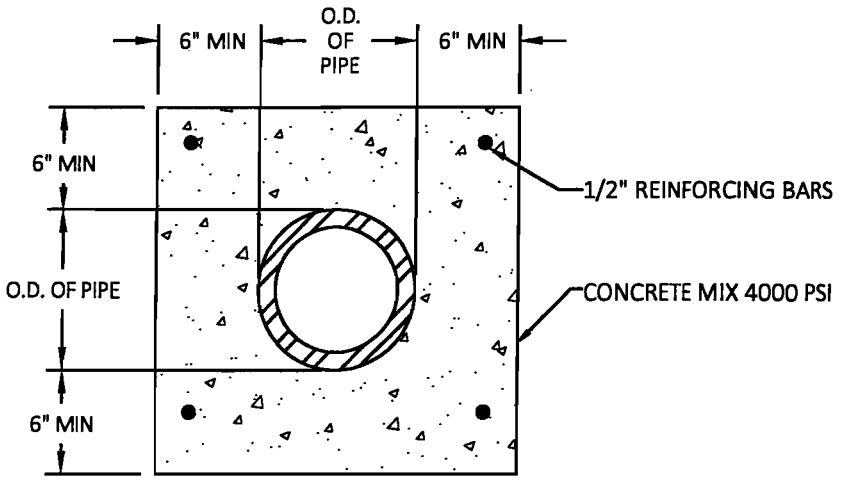

CONTINUOUS CONCRETE ENCASEMENT

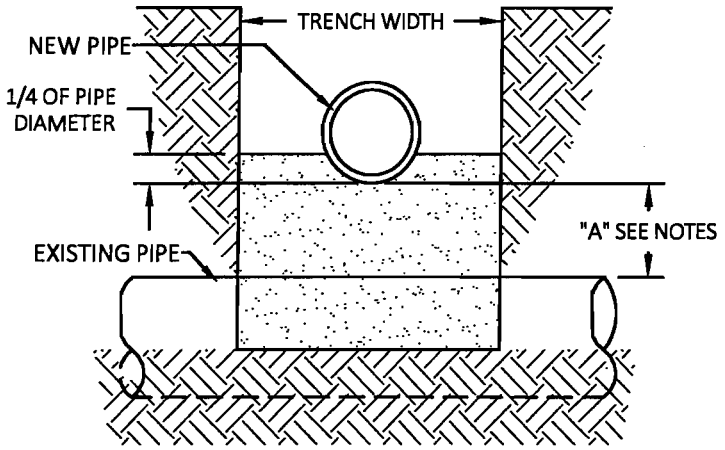

ABOVE EXISTING PIPE

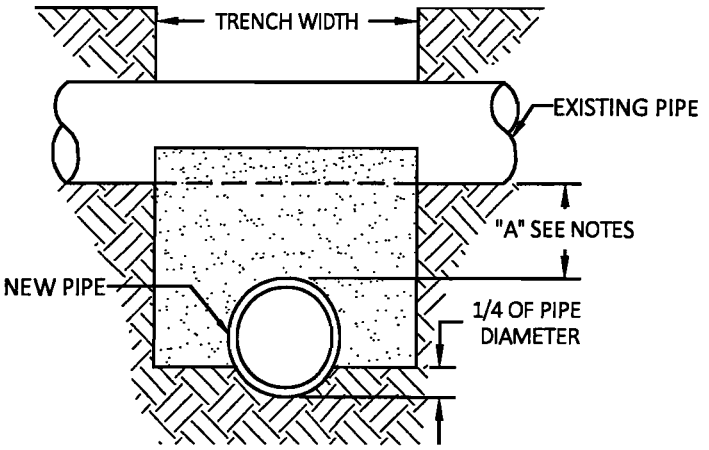

BELOW EXISTING PIPE

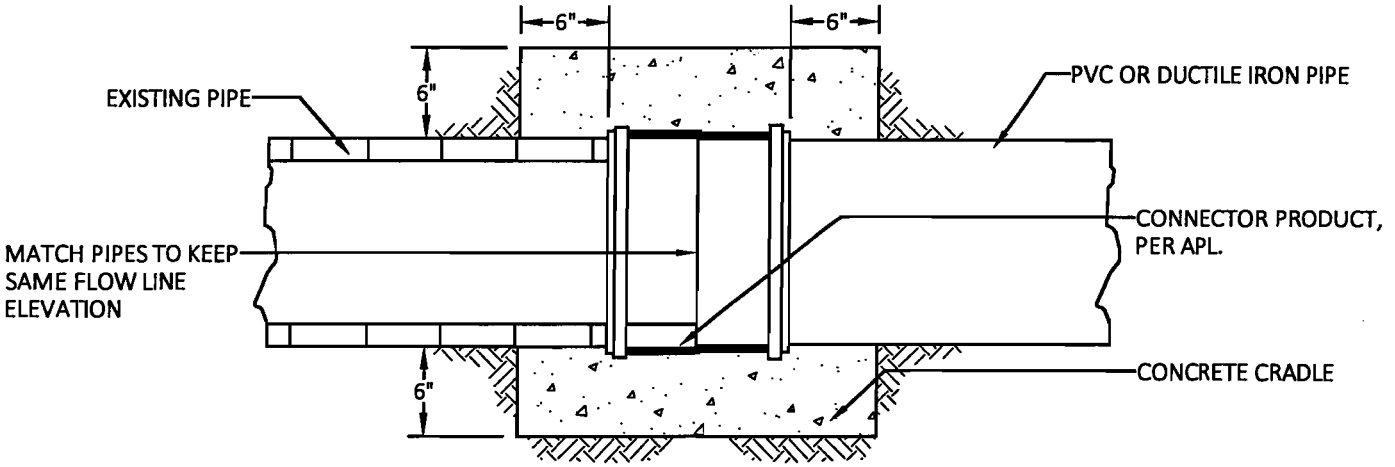

JOINT ENCASEMENT

Notes:

1. All work shall be done in accordance with the latest edition of the City of Cape Girardeau Standard Specifications.
2. Where "A" is greater than 12" no concrete encasement is required use Type 5 compacted base between pipes per specs.
3. Where "A" is 12" or less use standard concrete sewer cradle on existing sewer pipe.
4. All pipe are sewer carriers. If any pipe is a water carrier see Water Main specifications.

STATE OF MISSOURI
CASEY L. BRUNKE
NUMBER
PE-2010018549
PROFESSIONAL ENGINEER
07-25-16

Pipe Crossing and Continuous Encasement

Prepared By: JH	Scale: NTS	Revisions:
Checked By: TR - DW - JL		
Date: 02-25-2016	Page 44	

CITY of CAPE GIRARDEAU
DEVELOPMENT SERVICES
City Standard Details

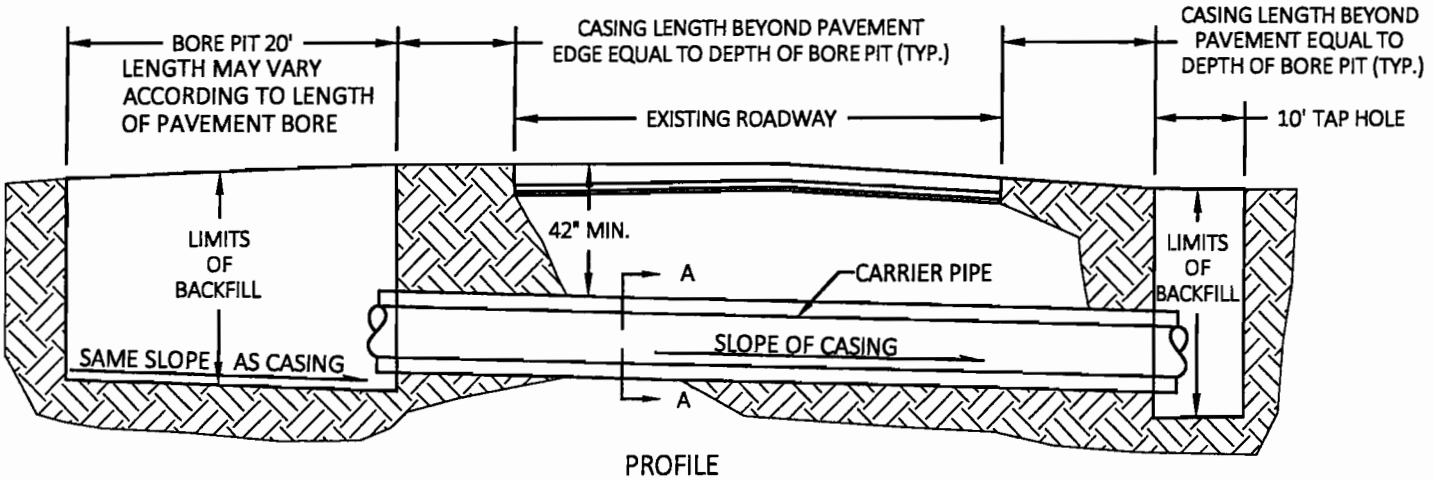

PROFILE

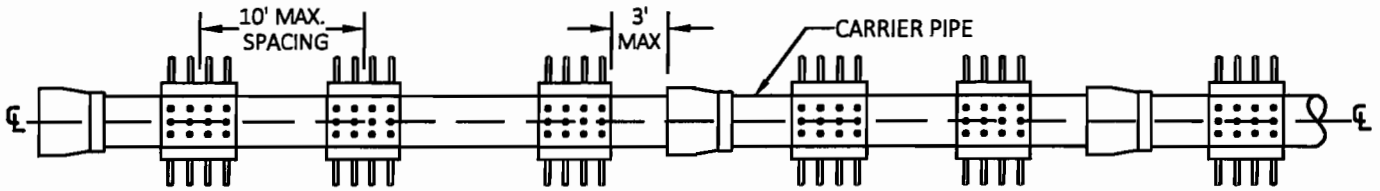

SPACING DETAILS

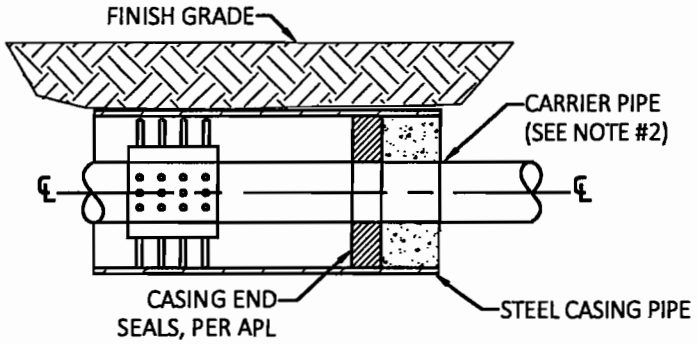

CASING END SEALS

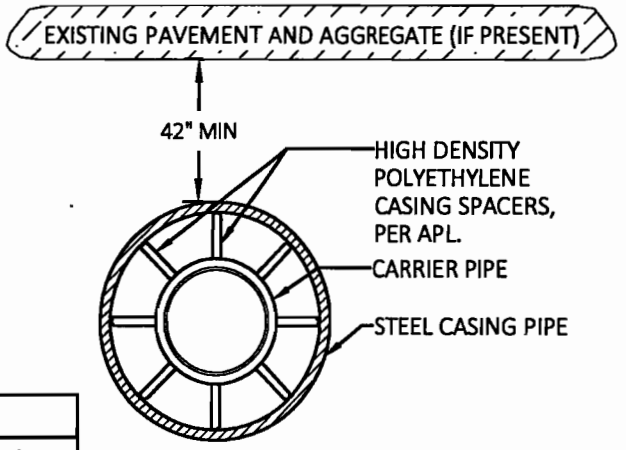

SECTION A-A

Steel Casing Pipe	
Diameter Ø	Minimum Wall Thickness
6" Thru 12"	0.188"
14" Thru 22"	0.250"
24" & 26"	0.281"
28" Thru 34"	0.312"
36" Thru 48"	0.344"

Notes:

1. All work shall be done in accordance with the latest edition of the City of Cape Girardeau Standard Specifications.
2. Do not scale drawing, follow dimensions.
3. Carrier pipe material shall be SDR 35 PVC or DIP.
4. Steel casing pipe used in the installation must have a minimum yield strength of 36,000 PSI.
5. Steel casing pipe shall have a minimum wall thickness as indicated on the table.
6. All joints in the casing pipe shall be welded and coated with bituminous based product, per APL.
7. Polyethylene spacers shall be placed every ten feet along the carrier pipe and two at every joint or as otherwise specified by the manufacturer.

STATE OF MISSOURI
CASEY L. BRUNER
NUMBER
PE-2010018549
PROFESSIONAL ENGINEER
07-25-16

Sanitary Sewer Bore

Prepared By: JH	Scale: NTS	Revisions:
Checked By: TR - DW - JL		
Date: 02-25-2016	Page 45	

CITY of CAPE GIRARDEAU
DEVELOPMENT SERVICES
City Standard Details