ENGINEERING FOR A BETTER WORLD
FEEZOR
ENGINEERING, INC.

EXPANDED HEAT REMOVAL PILOT STUDY

BRIDGETON LANDFILL

BRIDGETON, ST. LOUIS COUNTY, MISSOURI

January 2015

STATE OF MISSOURI
AARON L. KARLAS
NUMBER
PE-2014035607
PROFESSIONAL ENGINEER

1/20/15

Prepared For:

Bridgeton Landfill, LLC
13570 St. Charles Rock Road
Bridgeton, MO 63044

Prepared By:

Feezor Engineering, Inc.
3405 Hollenberg Drive
Bridgeton, MO 63044

In Association With:

P. J. Carey & Associates, P.C.
587 Valine Way
Sugar Hill, Georgia 30518

Expanded Heat Removal Pilot Study

Bridgeton Landfill, LLC

1 INTRODUCTION 1

2 SYSTEM DESIGN 1

2.1 SYSTEM PUMP AND VALVE 1
2.2 MEASUREMENT DEVICES 2
2.3 PROPOSED MODIFICATIONS FOR FIRST QUARTER OF 2015 4

3 INSTALLATION 4

3.1 HEAT EXTRACTION SYSTEM FACILITIES 4
3.2 HEAT EXTRACTION SYSTEM FIELD PIPING 5
3.3 PROPOSED MODIFICATIONS FOR FIRST QUARTER OF 2015 5

4 STANDARD OPERATING PROCEDURES 6

4.1 EVALUATION OF SYSTEM FLOW 6
4.2 EVALUATION OF COOLING TOWER ON/OFF 7
4.3 FLOW ADJUSTMENT AT EACH HEAT EXTRACTION POINT 7
4.4 NON-ROUTINE MAINTENANCE ITEMS 7

5 DATA COLLECTION 8

6 PRELIMINARY FINDINGS 9

6.1 HEAT EXTRACTION RATE 9
6.2 TEMPERATURE REDUCTIONS 9
6.3 NEXT QUARTERLY UPDATE 9

APPENDICES

Appendix A – Temperature Monitor Probe Graphs
Appendix B – Heat Extraction Point Data Graphs
Appendix C – Heat Extraction System As-Built Drawings
Appendix D – Temperature Monitoring Probe As-Built Drawings
Appendix E– System Pump Specifications
Appendix F – Equalization Tank Specifications
Appendix G – Bag Filtration System Specifications
Appendix H – Nalco Trasar System
Appendix I – Blow-Down Control Valve
Appendix J –Data Collection Devices
Appendix K – Open Cooling Tower
Appendix L – New Closed Circuit Cooling Tower
Appendix M – Heat Extraction Data
Appendix N – Temperature Monitoring Data

1 INTRODUCTION

This document is the first quarterly pilot study update for the Expanded Heat Removal Pilot Study underway in the South Quarry of the Bridgeton Landfill in Bridgeton, Missouri. This quarterly update was requested by the Missouri Department of Natural Resources (MDNR) in a letter dated September 4, 2014, and includes pilot study data collected prior to January 1, 2015. In addition, this document provides as-built documentation and technical specifications for the system.

The following discussion includes a summary of the system design and installation, as well procedures for operations and data collection. A summary of operational data is presented along with preliminary findings based on the data.

2 SYSTEM DESIGN

The current system design was expanded from the original single heat extraction point in September of 2014. The expanded system design included converting seven (7) existing Gas Interceptor Wells (GIWs) to Heat Extraction Points. The overall system design was based on data collected from operating GIW-4 as a heat extraction point. The initial data obtained from GIW-4 operations, was utilized to estimate the approximate flow (GPM) and heat removal (kW) for a heat extraction point with similar construction. The overall system utilized a single open cooling tower and pump system intended to deliver approximately 10 to 12 gallons per minute (GPM) of temperature treated liquid to all seven (7) heat extraction points. The total system head was calculated as the sum of elevation differential, pipe friction losses and head loss at various infrastructure components. The total system head is estimated to be approximately 100 ft. The total head of the current system varies based upon the conditions of the filters in the bag filter system.

2.1 PUMP AND VALVES

The current system pump specifications present a maximum head of 180 ft. and maximum flow of 380 GPM. The pump is operated at approximately 60% capacity, as measured in hertz on the VFD display, which currently pumps 90 to 95 GPM at this frequency. A butterfly valve at the end of the influent piping can also be adjusted to increase or decrease pressure/flow to the system as stated above. Periodic drops in system flow have been directly attributed to the conditions of the filters in the bag filter system. Replacement of the bag filters has restored the flow to the design rate on each occasion.

The system design includes a globe valve and flow meter on the influent line at each heat extraction point. This combination is used to control and monitor flow for operation and calculation of heat extraction (kW) at each point.

The current system's liquid capacity is approximately 7,000 gallons. A 20,000 gallon frac tank (**Appendix F**) is used to maintain sufficient supply water to the system pump. The system pump pressurizes the water from the equalization tank (frac tank) through the entire system to the discharge at the top of the open cooling tower. The water is cooled by the open cooling tower fan and then gravity drains to the equalization tank. A pressurized make-up water valve was installed that maintains a near constant level in the equalization tank.

2.2 MEASUREMENT DEVICES

The heat extraction system includes several data measurement devices. These include flow meters, resistance temperature detectors (RTDs), thermocouples in casing, the Nalco 3DTraser Control System and Temperature Monitoring Probes installed in the waste at specific offset distances from the heat extraction points.

The current system includes eight (8) flow meters utilized for measuring flow at various locations in the system. A total system flow meter is in place just past the bag filter system. This flow meter is utilized to determine the total system flow being pumped to the heat extraction points. The current system delivers between 90 to 100 GPM via the influent line. The flow meter provides real-time flow data of the system. The other seven (7) flow meters are installed on the influent line at each heat extraction point. The reading from each flow meter is utilized to adjust the globe valve to provide the desired flow to each respective heat extraction point. The globe valve is adjusted until the flow measurement is approximately 10 to 12 GPM or completely open. The flow is recorded at various times to determine heat extraction (kW) at the point at a given time.

A total of eleven (11) resistance temperature detectors (RTDs) are currently utilized in the system. Four (4) RTDs are installed in the pressurized header piping to determine the temperature of the pressurized water. Three of these RTDs are installed in the influent line. These are used utilized to determine the influent temperature to the adjacent heat extraction points. The temperature data from these three points represent the effectiveness of the open cooling tower at the current ambient temperature. The fourth in-line RTD has been installed near the end of the effluent line. This temperature measurement provides a quantitative total heat extraction of the system. The remaining seven (7) RTDs are installed on the effluent line just outside the well casing at each heat extraction point. The temperature measurements from these RTDs, in comparison with adjacent influent RTD temperatures provide the change in temperature of the pressurized water pursuant to the heat removal at the respective point.

Thermocouples were installed within the GIW six (6) inch casing utilized as heat extraction points. The number and depth of thermocouples installed was subject to the total depth the stainless steel tubing was able to be installed. The depth of installation and the respective thermocouples in each heat extraction point are as follows:

Heat Extraction Point As-Built Depths

Location	Depth of Installation (Feet)	Thermocouple Depth (Feet)
GIW-2	106	40 & 105
GIW-3	30	30
GIW-4	130	50 & 115
GIW-5	63	50
GIW-6	52	50
GIW-7	120	50 & 115
GIW-10	120	50 & 115

The in-casing thermocouples measurements represent the temperature within the well at the respective depth.

In addition to the aforementioned data collection devices, eleven (11) Temperature Monitoring Probes (TMPs) were installed at various distances from heat extraction points and at various depths. The as-built information for the eleven (11) TMPs is included as **Appendix D**. The TMPs measurements represent the temperature in waste at the as-built location and depth. The TMPs consist of a stranded thermocouples installed a pyro-jacket sleeve. The thermocouples and sleeve are connected to a 3/8" fiberglass rod for installation. A four inch bore is drilled in the waste with sonic drilling technology, which allows drilling with no cuttings or residuals. Once the drill casing attains the design depth, the thermocouple strand, fiberglass rod and pyro-jacket are placed in the casing. A high solids grout mixture is utilized to fill the void between the thermocouple strand and the casing. This also provides protection during the removal of the drilling casing. The thermocouples extend above the ground surface and then through two fiberglass boxes. The first fiberglass enclosure provides a protected location for the outer Teflon coating to be removed. The thermocouples, with Teflon coating removed, extends through two seals and into an upper enclosure. In the upper enclosure, the thermocouples are connected to a switch connection. The switch connection includes an external connection compatible with the Omega HH806AU meter. The Omega HH806AU meter is the recommended measuring devices by the thermocouple manufacturer. The outer connection can also be connected to a multi-meter to measure resistance at each thermocouple.

2.3 Proposed Modifications for First Quarter of 2015

Significant modifications are scheduled to be completed in the first quarter of 2015. The principle modification is the installation of a closed circuit cooling tower and the use of a propylene-glycol mixture as the heat extraction medium. This modification will minimize the impact of ambient temperatures below freezing. The specifications for the closed circuit cooling tower have been included as **Appendix L**.

3 INSTALLATION

The installation of the current heat extraction system can be defined by three major components. The Heat Extraction System Facilities, Field Piping and Heat Extraction Point Infrastructure. The installation as-built drawings of the current heat extraction system are included the **Appendices C & D**.

3.1 HEAT EXTRACTION SYSTEM FACILITIES

The components comprising the Heat Extraction System Facilities include the facilities pad, equalization tank, system electric pump and variable frequency drive (VFD), bag filter system, electronically controlled blow-down valve, Nalco 3D Tracer System, system flow meter and open cooling tower.

The facilities pad includes a level aggregate pad with smaller concrete pads constructed in the aggregate pad footprint. One concrete foundation was constructed to support the open cooling tower. A second concrete pad supports the system pump, VFD and bag filter system. The electric control panel and tracer system are both skid mounted. The equalization tank is also positioned on the aggregate pad.

The equalization tank is a 20,000 gallon mobile frac tank that has been rehabilitated. The rehabilitation included complete abrasive blast cleaning, epoxy primer and finish on the inside of the tank. The equalization tank includes a four inch flange connected to the system pump at the bottom of the tank. The equalization tank was also retrofitted with a six inch flange approximately four feet from the bottom of the tank. The six inch flange is utilized to accept gravity flow water from the open cooling tower. A pressurized water line was installed in the side of the tank. A float-controlled water make-up valve was connected to the pressurized water line inside of the tank to maintain the design water elevation within the tank.

The system pump and VFD are installed just downstream of the equalization tank. The specifications of these components are included as **Appendix E**.

The bag filter system is installed downstream of the system pump. The specifications of the bag filter system are included as **Appendix G**.

A fully integrated Nalco water treatment program has been installed to operate concomitantly with the open cooling tower. The system includes automated testing and applicable dosing of Scale/Corrosion Inhibitor and Microbiocide treatments. In addition to chemical testing and treatment dosing, the system also controls the flow of blow down water as part of the overall treatment process. The blow down water discharge is managed as part of the facilities direct

discharge permit with the Metropolitan Sewer District. The specifications of the Nalco 3D Trasar System for cooling towers is included as **Appendix H**.

A system flow meter has been installed downstream of the bag filter system. The location can be seen in the as-built drawings included in **Appendix C**. The system flow provides critical information to the system operator. A change in total system flow is an indicator of issues within the system, as discussed in the Standard Operating Procedures below.

A Tower Tech Open Cooling Tower is being utilized to remove heat from the effluent water prior to returning to the equalization tank. The Tower Tech Unit being utilized has the capacity of 120 GPM with a temperature reduction of 30 to 40 degrees Fahrenheit. The open cooling tower utilizes a large fan on the bottom of the tower to force ambient air to remove heat from the effluent water. The tower requires pressurized water be introduced to the top flange. The water then travels downward as it is exposed to the ambient air currents from the fan. The water then gravity discharges from the lower flange to the equalization tank.

3.2 Heat Extraction System Field Piping

The heat extraction system field piping includes an influent HDPE pipe that distributes cooled liquid from the equalization tank and pressurized pump to the heat extraction points. The influent line extends past the last heat extraction point, GIW-7, and a back pressure and check valve to the effluent line. The effluent line starts just past the check valve adjacent to GIW-7. This HDPE pipe continues past each heat extraction point where it is connected to the discharge from the down-well piping of the respective point. The effluent liquid is pressurized until it discharges at the top of the open cooling tower. The as-built location of the piping is presented in **Appendix C**.

3.3 Heat Extraction Point Infrastructure

The Heat Extraction Point Infrastructure includes the down-well stainless steel piping, original six (6) inch perforated casing and gravel pack, control valves, measuring devices, steel flange and all associated connections.

The original construction of each Gas Intercepting Well (GIW) included a six (6) inch steel well casings installed in a thirty-six (36) inch bore hole. The construction included approximately twenty-five feet of solid pipe, bentonite, and soil seal from the ground surface. The well installation below twenty-five feet from the ground surface included perforated steel casing and 1” to 3” washed stone backfill.

Two (2) GIWs were modified for the purpose of heat extraction at the aforementioned locations. These modifications included changing the down-well piping and top flange. Specifically, the liquid extraction pump was removed and replaced with one (1) inch stainless steel closed loop piping. The original GIW top flange was removed and replaced with a “T” structure on top of the GIW casing. The “T” included a knife gate on the bottom, a stainless steel top flange for

connection to one (1) inch stainless steel tubing and the side flange being utilized for potential landfill gas extraction. These modifications have been documented in as-built drawings (**Appendix C**).

On the top of the flange, connected to the stainless steel tubing, is the influent and effluent connection lines. The influent line includes transition fittings for diameter change, a flow meter, globe valve, pressure release valve and check valve. The effluent line includes steam relief valve, Resistance Temperature Detector (RTD), ball valve, and transition fittings for diameter transition.

4 STANDARD OPERATING PROCEDURES

The Standard Operating Procedures of the Heat Extraction System are relatively straightforward. The following are the tasks regularly, (nearly daily), to ensure continual operation of the system.

4.1 EVALUATION OF SYSTEM OF FLOW

The evaluation of the system flow is completed by visually reading the digital flow meter display just downstream of the bag filter system. The system flow is controlled by two main variables. The first variable is the frequency set on the Variable Frequency Device (VFD) control panel, which controls the speed of the pump and subsequently the flow delivered to the influent line. The second variable is the condition of the bag filters within the bag filter system. Whenever the system flow drops below 90 GPM the system is shut down and the bag filters are replaced. In this reporting period, this process has restored the flow in all situations. The system typically out of operation twenty to thirty minutes during this process.

4.2 EVALUATION OF COOLING TOWER ON/OFF

The Tower Tech Open Cooling Tower is operated by a manual on/off switch at the base of the unit. The three influent line Temperature Monitoring Locations (TMLs 1-3) are utilized to evaluate the temperature of treated liquid. If the readings measured on the RTDs are below 40° Fahrenheit, the cooling tower is typically turned off over night to avoid the possibility of the influent line freezing. This evaluation is made daily based on the TML readings and the temperature forecast for the Bridgeton Landfill area. The transition to the propylene-glycol mixture discussed above will decrease the likelihood of freezing.

4.3 FLOW ADJUSTMENT AT EACH HEAT EXTRACTION POINT

As discussed above, each heat extraction point is equipped with a globe valve and a flow meter on the influent piping. Flow readings are utilized to determine the new adjustment of each globe valve. The frequent, near daily, readings of the flow are utilized to determine adjustment of each globe valve. The operator adjusts the globe valve to achieve 10 to 12 GPM. However, if the heat extraction point is unable to achieve this set point, the valve is set completely open.

4.4 Non-Routine Maintenance Items

Other operational considerations are made less frequently. These include back flow adjustment, component cleaning and component replacement. During the start-up of the system the back flow control is set to supply each of the heat extraction point the desired flow rate of liquid. The valve was initially left open approximately three-quarters and then adjusted back to approximately one-quarter open. This valve is to remain partially open at all time to allow for flow to bypass from the influent line to the effluent line if blockage occurred at the heat extraction points.

Cleaning of various components is completed as required. Some of the flow meters were cleaned after the initial construction, and have functioned well since. As stated above, the bag filters require cleaning approximately once per 7 to 10 days. Devices are cleaned when data anomalies that may be caused by a particular device are observed.

Based on frequent review of system data and comparison of data anomalies, system components are evaluated for replacement. The RTDs and bag filters are only components requiring replacement to during the 4th quarter of 2014.

5 Data Collection

The scope of data collection is based on the daily operation of the heat extraction system and the evaluation of the effect of the system on surrounding waste.

The data collected for system operation includes several components. The main system components include the following:

- Total System Flow (flow meter)
- Temperature Measurement at TMLs 1-4 (RTDs)
- Temperature of Effluent Liquid at each Heat Extraction Point (RTDs)
- Flow Distributed to each Heat Extraction Point (flow meters)

The total flow is utilized to verify adequate flow is being distributed to the heat extraction points and to determine if the bag filters need to be replaced.

The readings obtained from TML 1-3 determine the operation of the open cooling tower, when ambient temperatures are near the freezing point of water.

The temperatures and flow measured at each heat extraction point are utilized to determine the globe valve setting for the respective heat extraction point.

All data excluding total system flow is informative in evaluating the effect on the heat extraction on the adjacent waste mass. Data collection utilized in this evaluation includes: thermocouples

within GIW casings, RTDs on the influent and effluent lines, thermocouples installed within the waste mass at various depths and offset distances from heat extraction points and flow meters at each heat extraction point.

Several Type T thermocouples, from Omega, were installed within the 6" casing to measure the temperature within the casing pursuant to the operation of the respective heat extraction point. All type T thermocouples are measured by a HH806AU Omega Meter, as recommended by Omega. These measurements were recorded at various times for comparison to ambient weather conditions, time of day, phase of operation and other potentially relevant variables. The temperatures recorded with in the casing can be found in **Appendix M**.

All RTDs are measured by a HH804U Omega meter. Four RTDs have been installed on the influent and effluent transport lines. The three RTDs installed on the influent line, labeled TML 1, 2 & 3, provide the influent temperature supply to each heat extraction point. These temperatures are utilized to determine the rate of heat extraction at each point. The RTD installed at TML 4 records the effluent liquid temperature just prior to entering the open cooling tower. This temperature provides some quantitative data regarding the total heat rate extracted by the system. Readings for TMLs 1 – 4 are included in **Appendix M**.

A RTD is installed on the effluent line of each heat extraction point. This measurement represents the temperature of the liquid just as it leaves the heat extraction point. This temperature compared to the closest upstream TML are utilized to calculate the temperature delta at each heat extraction point. The RTD readings at each heat extraction point are included in **Appendix M**. The presentation of the energy removed (kW) is attached in **Appendix B**.

Eleven (11) Temperature Monitoring Probes (TMPs) have been installed at different offsets and depths below ground surface adjacent to the heat extraction points. The TMPs include thermocouples installed at multiple depths as can be seen in **Appendix D**. The thermocouples are measured in the same format as the thermocouples within the casing. All thermocouples are type T and measured by a HH806AU Omega Meter. A multimeter is utilized periodically to confirm the thermocouple's resistance is within an acceptable tolerance. The graphs presenting the temperature profiles as measured in the thermocouples is included as **Appendix A**.

The heat extraction system is equipped with eight (8) flow meters to monitor flow at specific locations within the system. All flow meters are digital and present the flow rate in Gallons Per Minute (GPM). As discussed in detail above, the main system flow meter presents the total influent liquid distributed to the heat extraction points. This flow meter is utilized to evaluate the overall operation of the system. The other seven (7) flow meters are installed at each heat extraction point. This enables the operator to quantify globe valve adjustments and the calculation of energy removed.

6 PRELIMINARY FINDINGS

The data collected up to the end of December has not been evaluated in detail at this time but the measurements taken have shown the information as described below.

6.1 HEAT EXTRACTION RATES

Heat extraction rates in the range of 10 to 15 kW have been sustained for the GIW wells that include heat exchange systems of greater than 100 feet in depth. GIW-5 and GIW-6 have lower extraction rates (approximately 5 kW) due to their shorter exchange length. Extraction rates have been maintained at a relatively uniform rate with time due to falling inlet liquid temperatures. It is likely that constant inlet temperatures would indicate a slightly falling rate of extraction for the current set up over a longer monitoring period.

6.2 TEMPERATURE REDUCTIONS

Temperatures within the GIWs fall almost immediately following the onset of cooling liquid circulation. This suggests that the cooling elements are capable of extraction of heat as fast as it is available within the GIW structure.

Temperature drops within the waste mass adjacent to the Heat Extraction points show a distinct pattern or greater drop of the north side of the GIW (see TMPs 10 (*N) vs TMPs 10 (*S). This pattern indicates that the heat flow without heat extraction is from south to north. This further indicates that very little if any heat generation, above what would be considered in the normal range, is being generated on the north side of the GIW 10. This is evidenced by the 60 degree drop in the TMP 10-9N and more than 100 degree drop in TMP 10-5N versus the smaller drops (approximately 20 degrees) on the south side TMP 10 units. The continuing drop in temperature on the north side and relatively constant temperature on the south side of GIW 10 at the present time suggest a near steady state condition on the south with continued storage depletion of energy to the north.

Temperature drops have also been apparent at some distance from the extraction points. This is evidenced by the initial responses of TMP-19 and the continuing response of TMP-20. These TMPs are located 25’ and 24’ from the nearest extraction points respectively.

6.3 NEXT QUARTERLY UPDATE

The next quarterly update will be submitted on April 20, 2015 and will include operation and monitoring data for the first quarter of 2015. This update will also include as-built information regarding the transition to a closed circuit cooling tower and propylene-glycol heat extraction liquid.

APPENDIX A – TEMPERATURE MONITORING PROBE DATA

TMP-10-9N

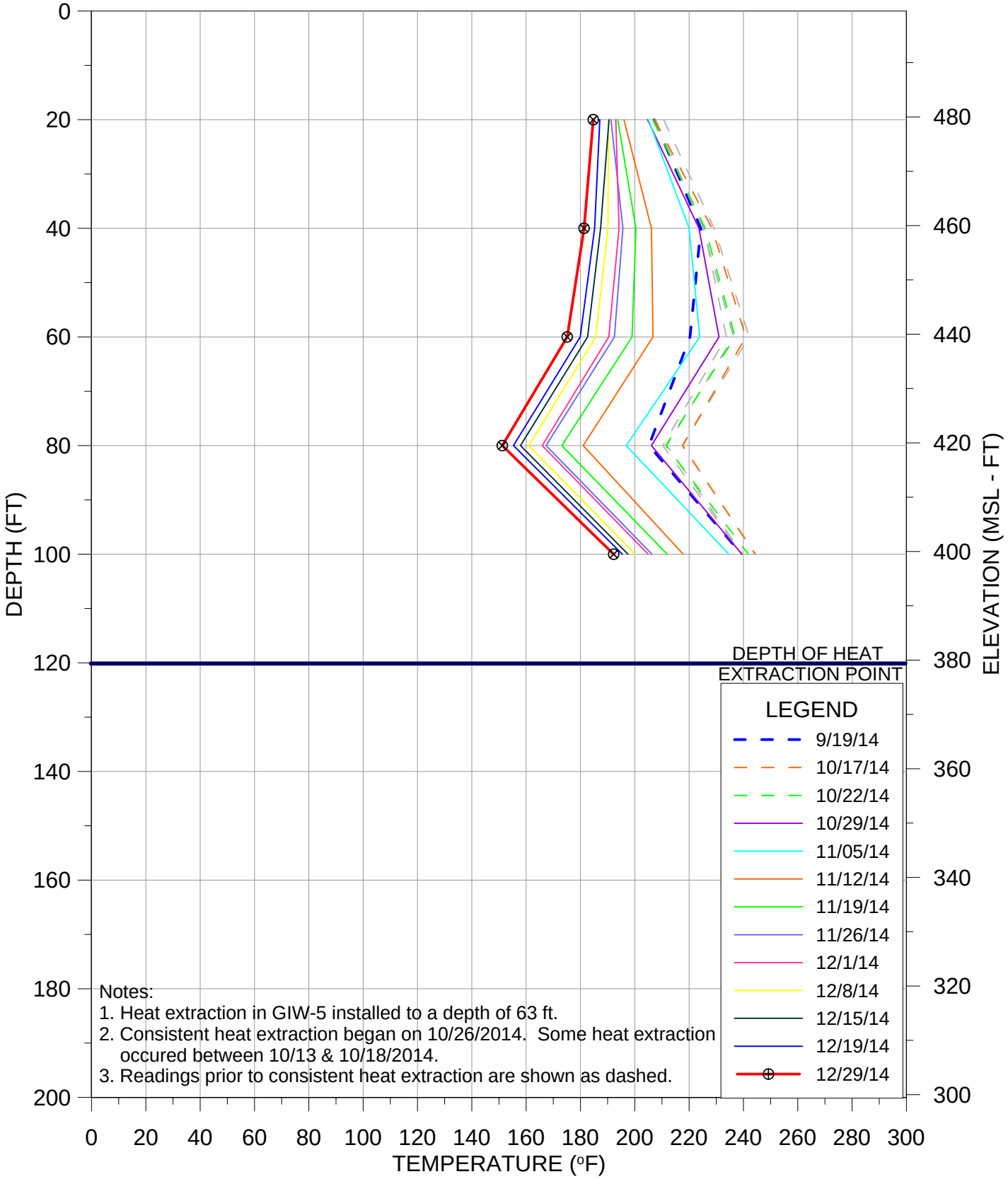

TEMPERATURE VS DEPTH
BRIDGETON LANDFILL

TMP-10-5N

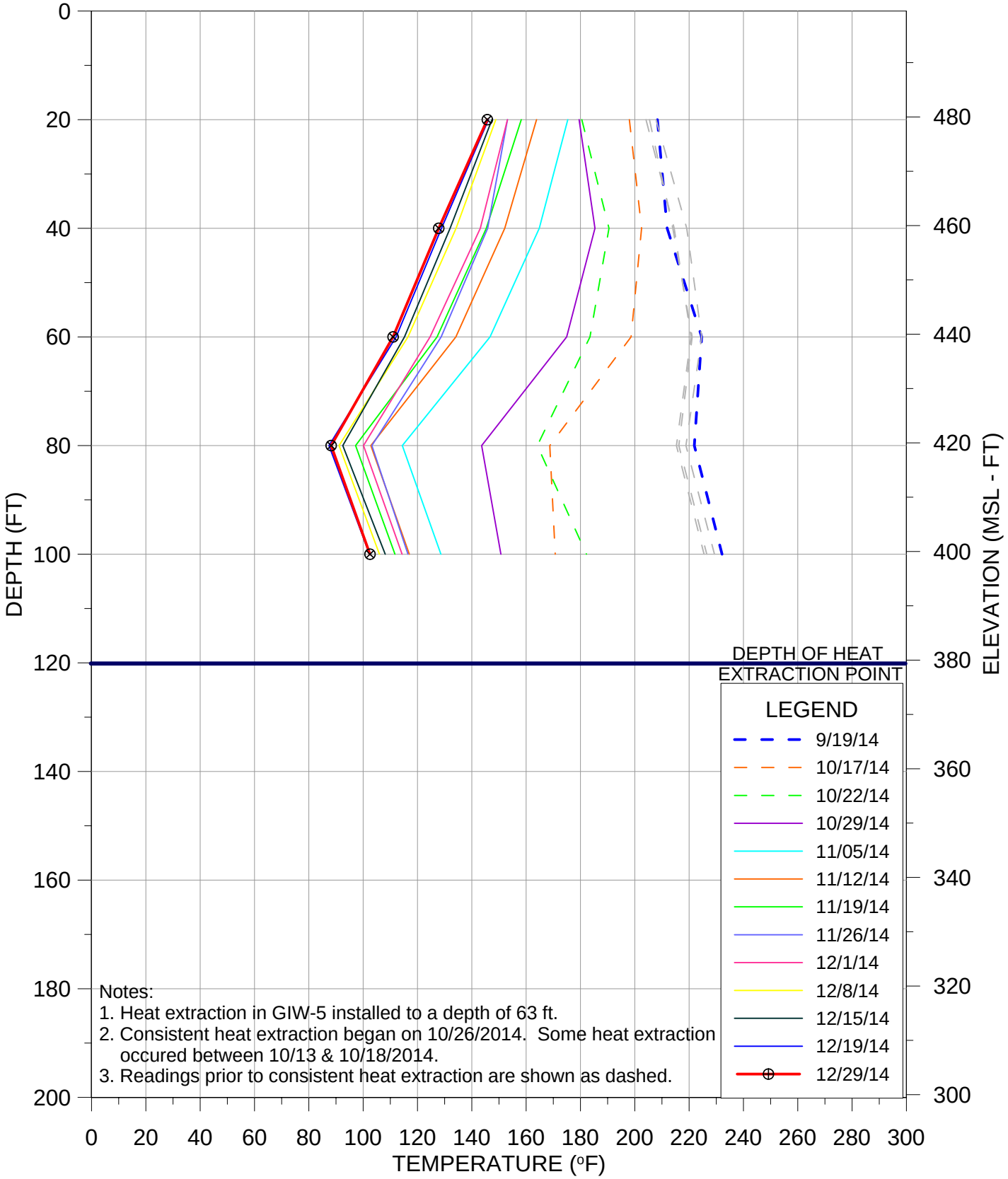

Notes:
1. Heat extraction in GIW-5 installed to a depth of 63 ft.
2. Consistent heat extraction began on 10/26/2014. Some heat extraction occured between 10/13 & 10/18/2014.
3. Readings prior to consistent heat extraction are shown as dashed.

TEMPERATURE VS DEPTH
BRIDGETON LANDFILL

TMP-10-5S

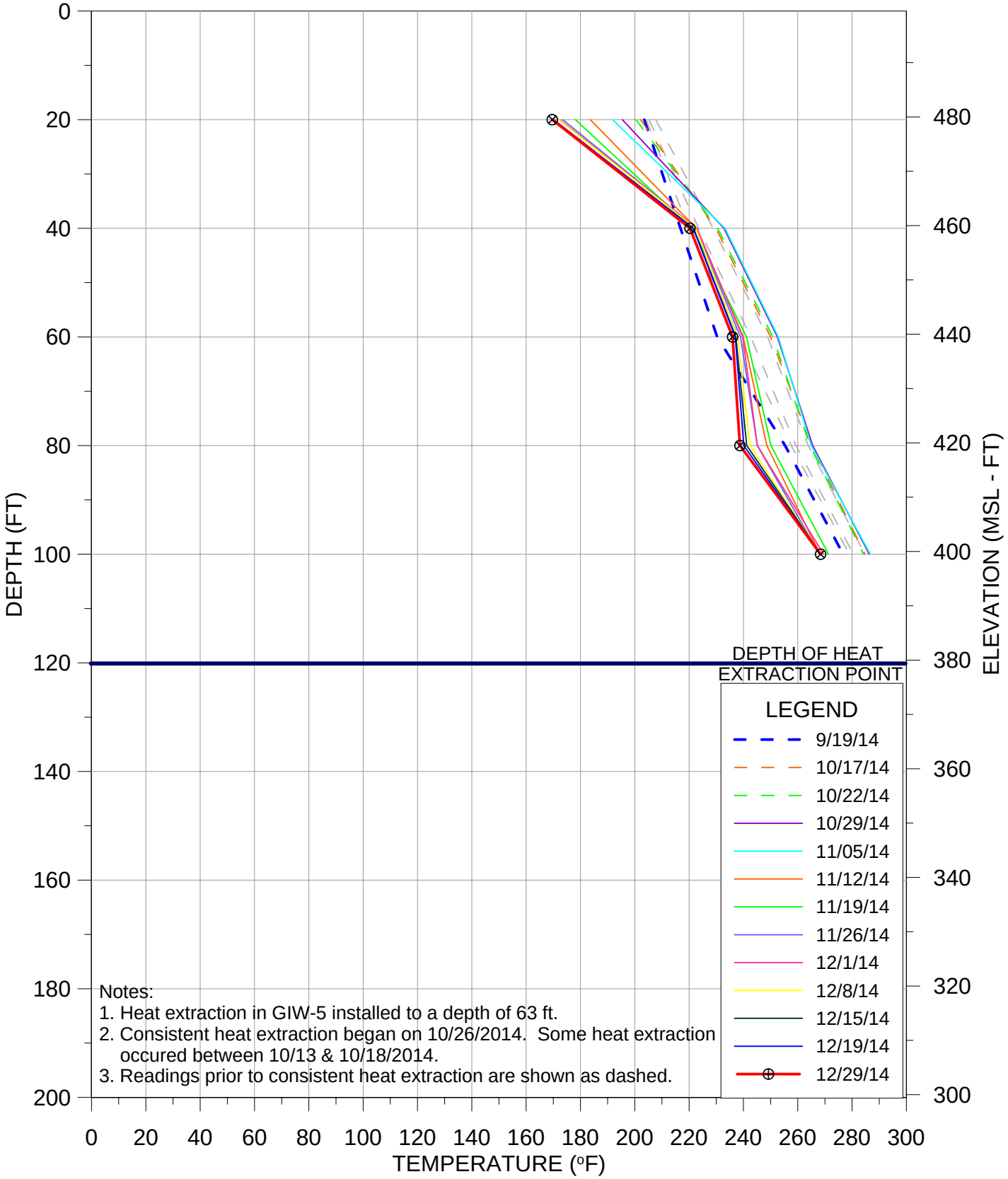

Notes:
1. Heat extraction in GIW-5 installed to a depth of 63 ft.
2. Consistent heat extraction began on 10/26/2014. Some heat extraction occured between 10/13 & 10/18/2014.
3. Readings prior to consistent heat extraction are shown as dashed.

TEMPERATURE VS DEPTH
BRIDGETON LANDFILL

TMP-10-9S

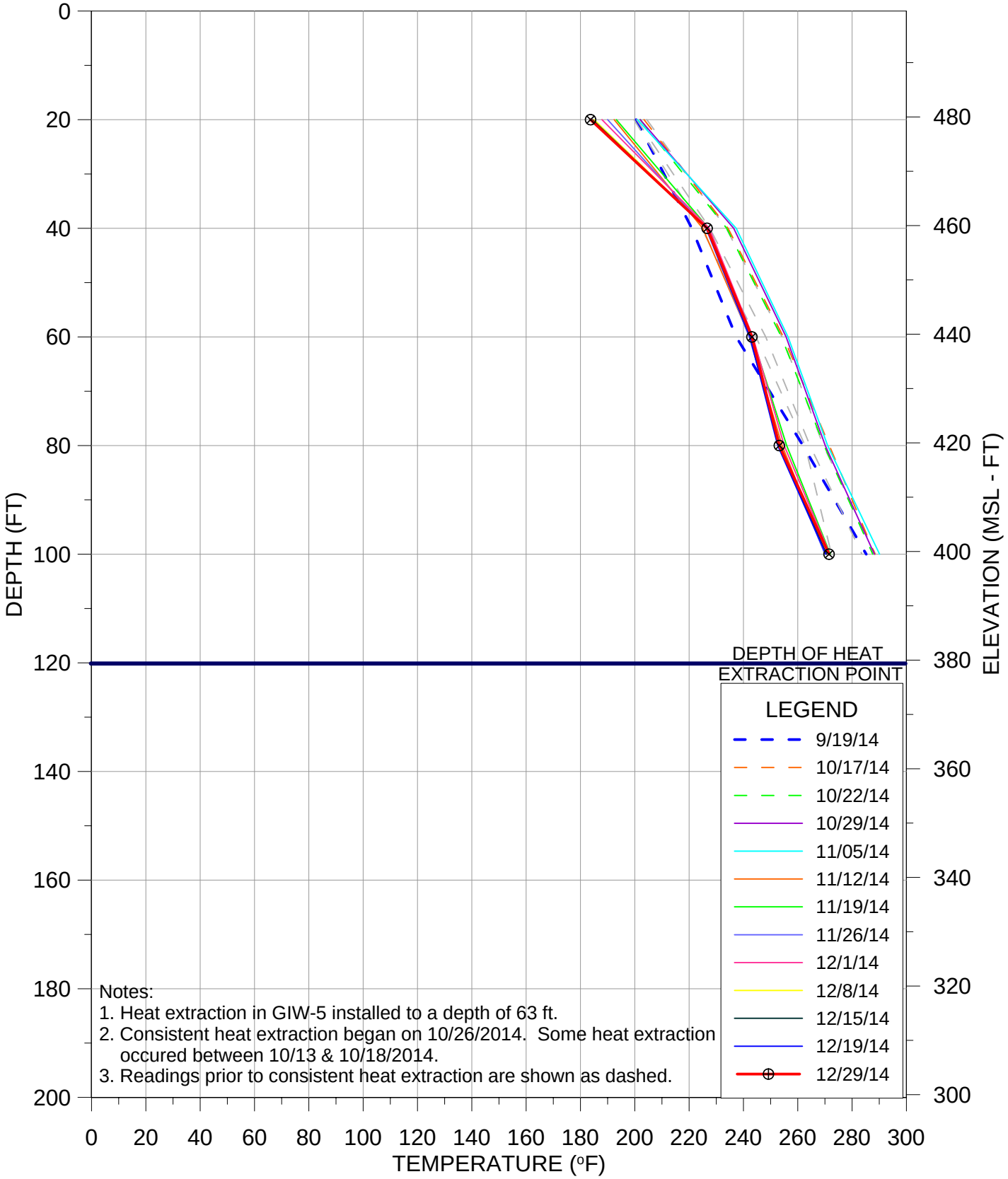

Notes:
1. Heat extraction in GIW-5 installed to a depth of 63 ft.
2. Consistent heat extraction began on 10/26/2014. Some heat extraction occured between 10/13 & 10/18/2014.
3. Readings prior to consistent heat extraction are shown as dashed.

TEMPERATURE VS DEPTH
BRIDGETON LANDFILL

TMP-5-9N

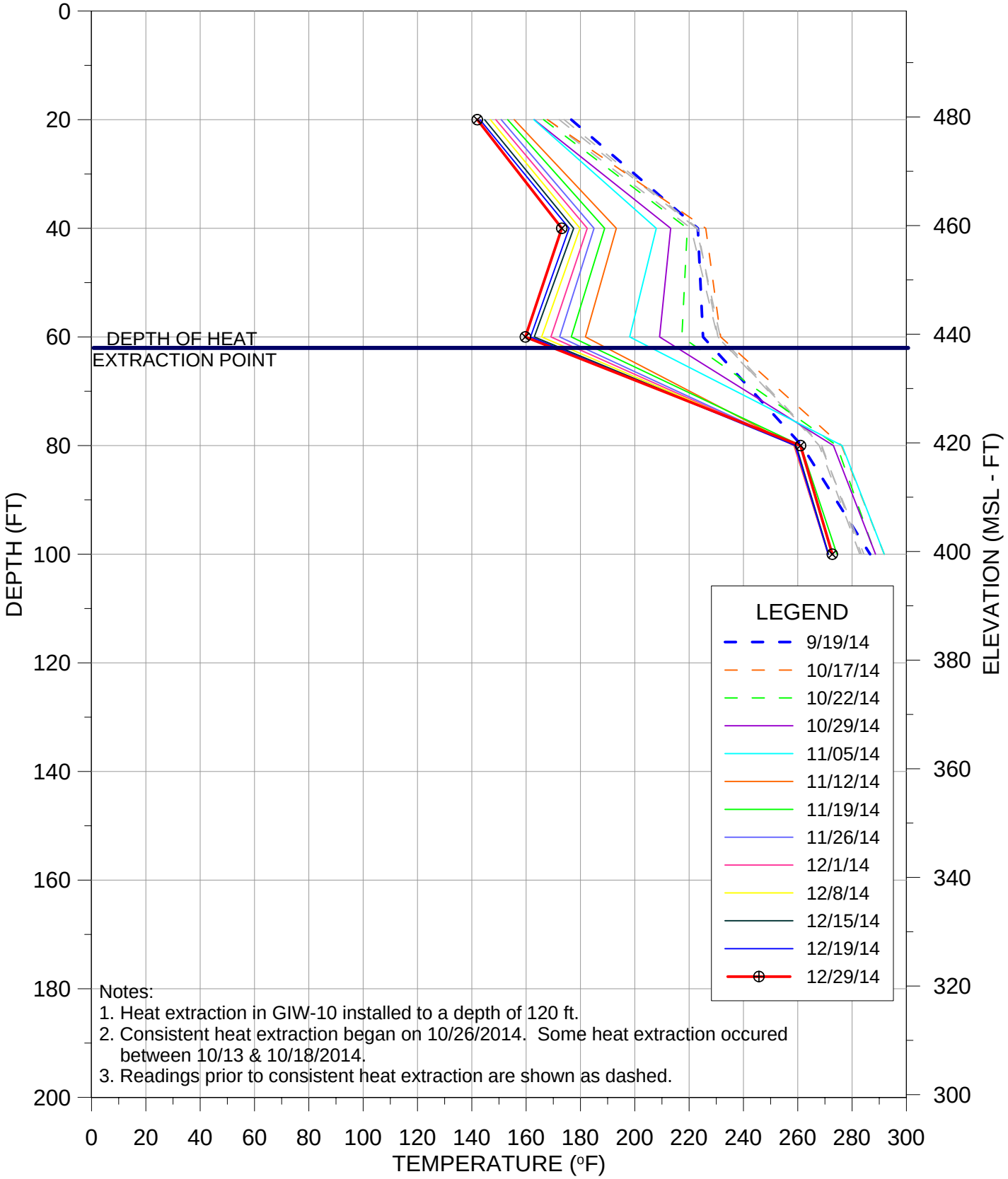

TEMPERATURE VS DEPTH
BRIDGETON LANDFILL

TMP-5-5N

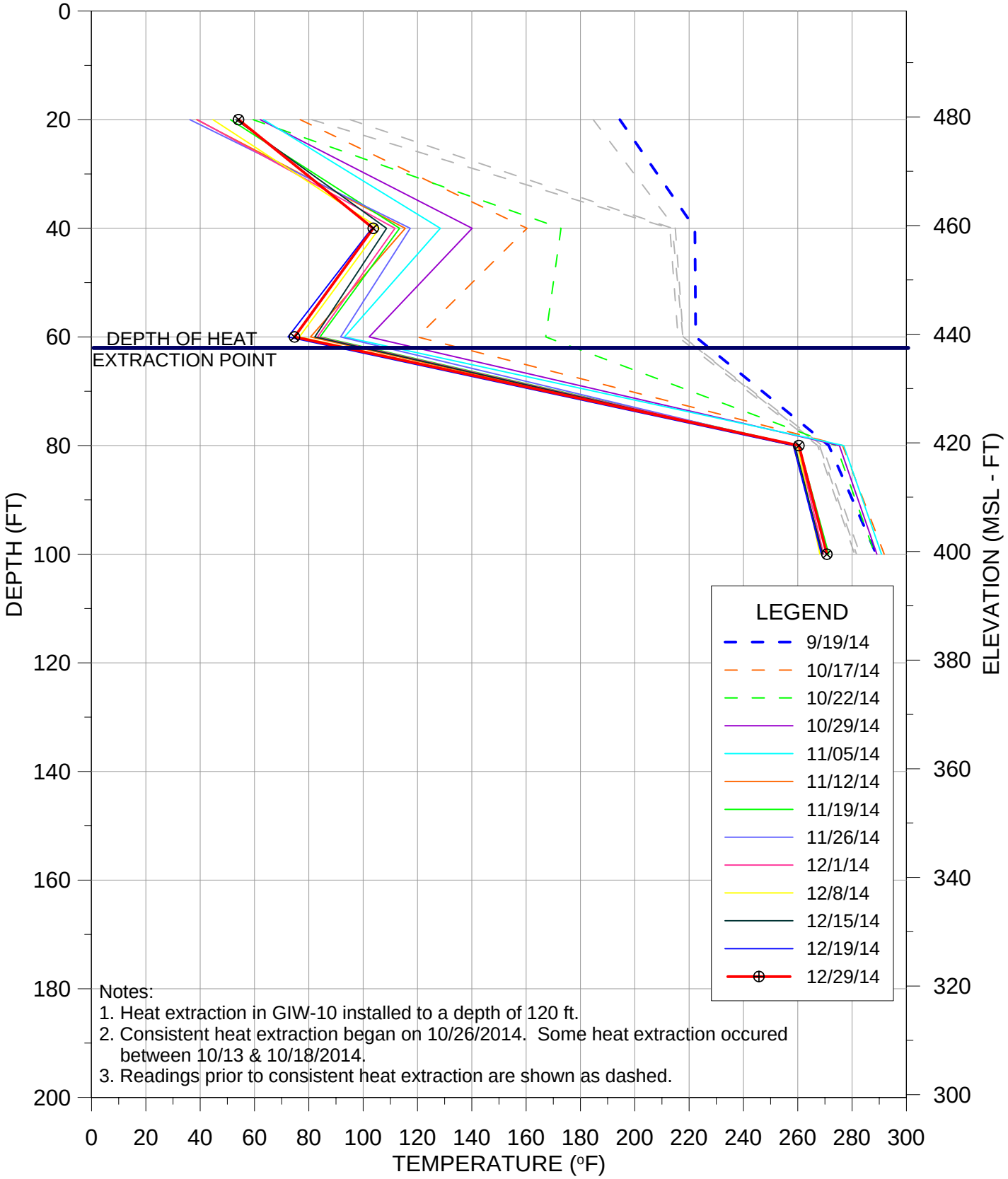

TEMPERATURE VS DEPTH
BRIDGETON LANDFILL

TMP-5-5S

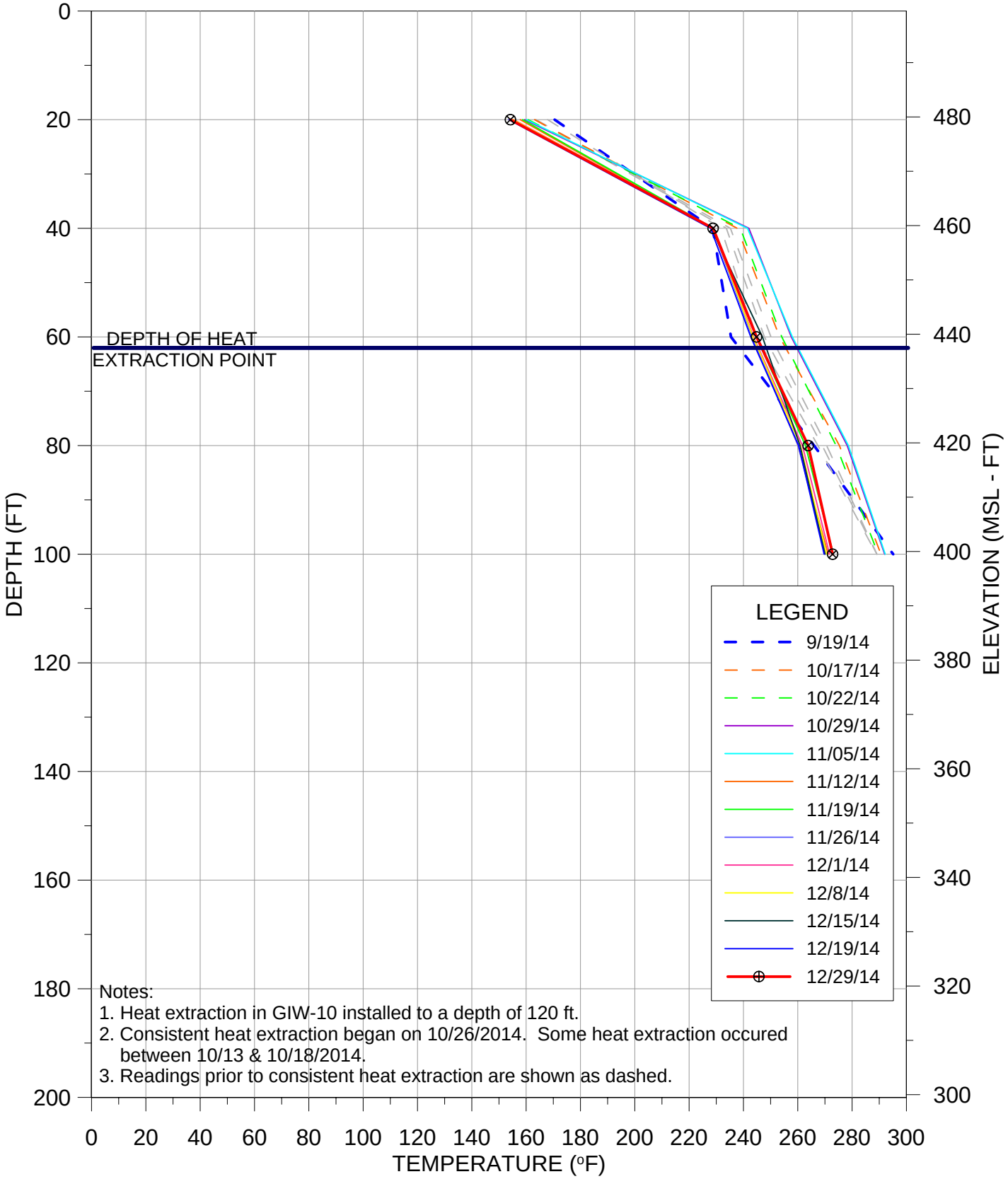

TEMPERATURE VS DEPTH
BRIDGETON LANDFILL

TMP-5-9S

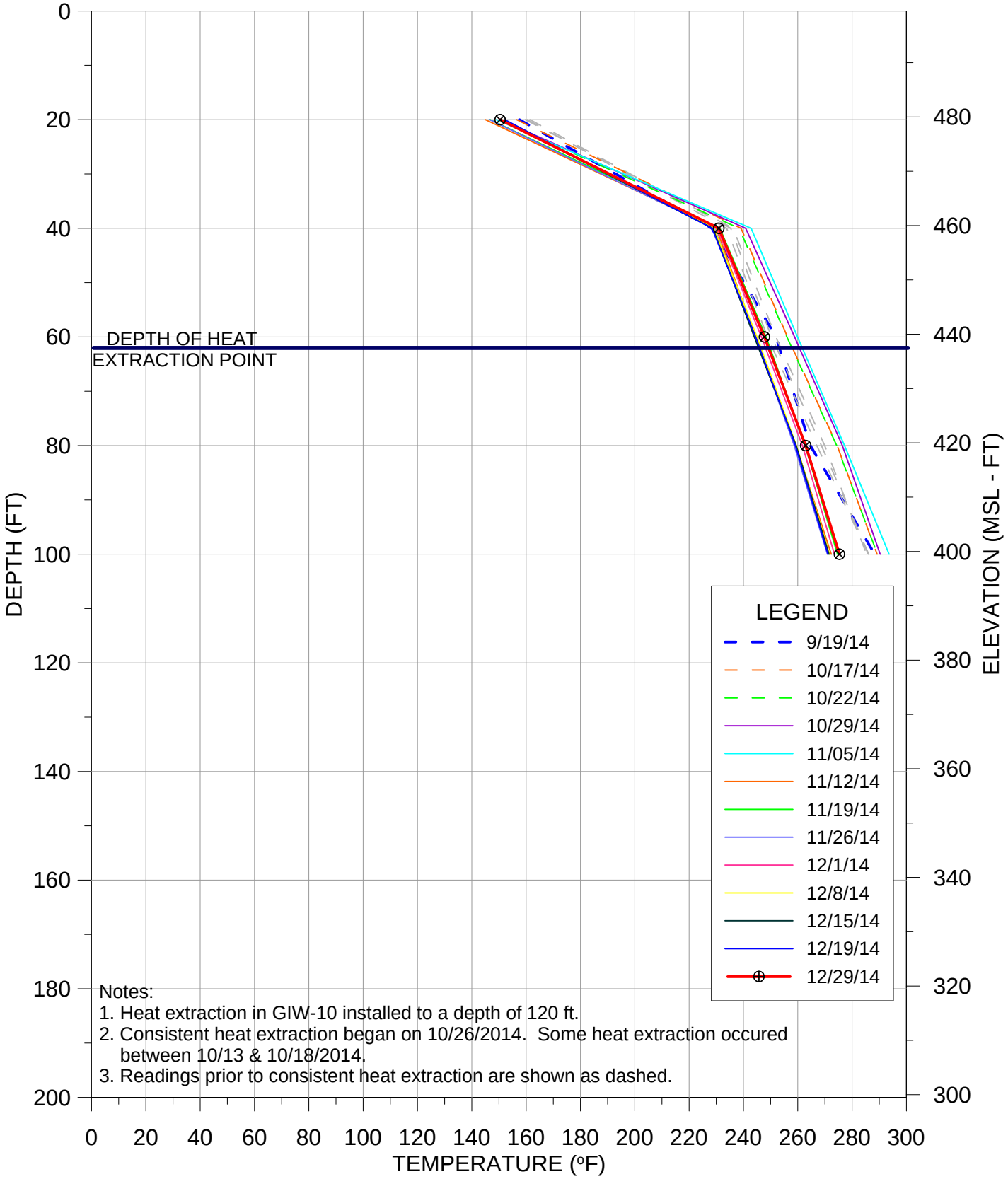

Notes:
1. Heat extraction in GIW-10 installed to a depth of 120 ft.
2. Consistent heat extraction began on 10/26/2014. Some heat extraction occured between 10/13 & 10/18/2014.
3. Readings prior to consistent heat extraction are shown as dashed.

TEMPERATURE VS DEPTH
BRIDGETON LANDFILL

TMP-14R

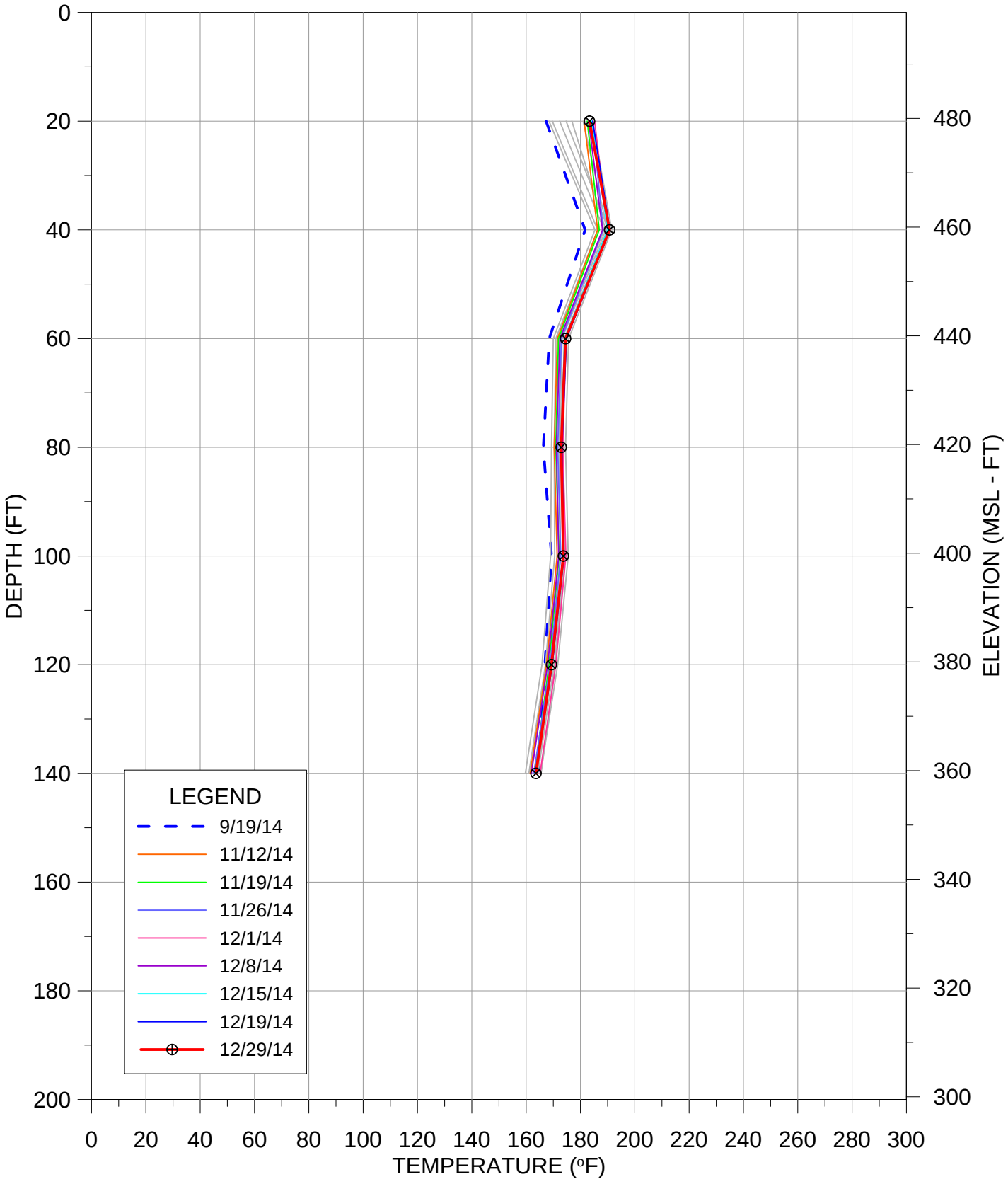

TEMPERATURE VS DEPTH
BRIDGETON LANDFILL

TMP-19

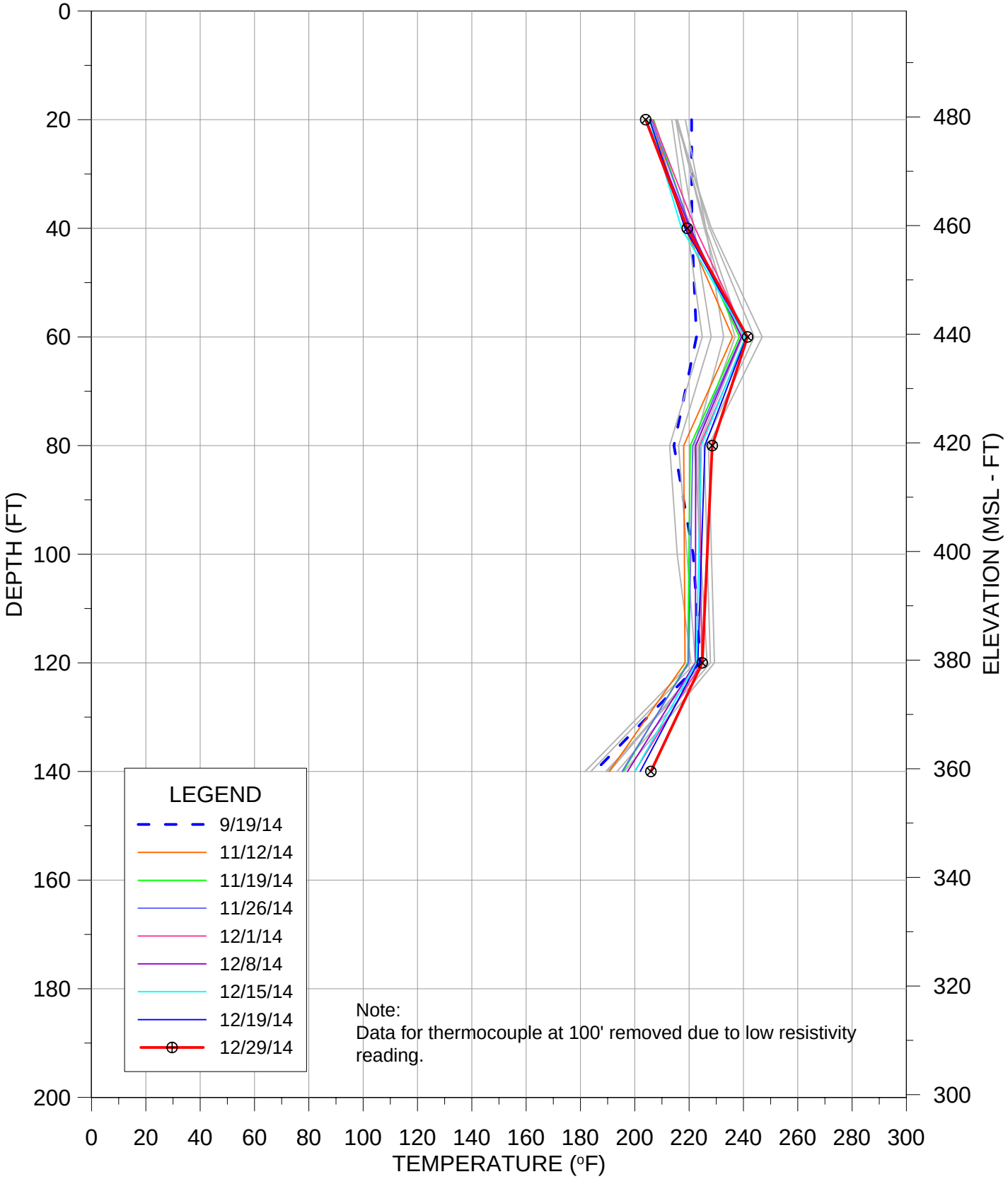

TEMPERATURE VS DEPTH
BRIDGETON LANDFILL

TMP-20

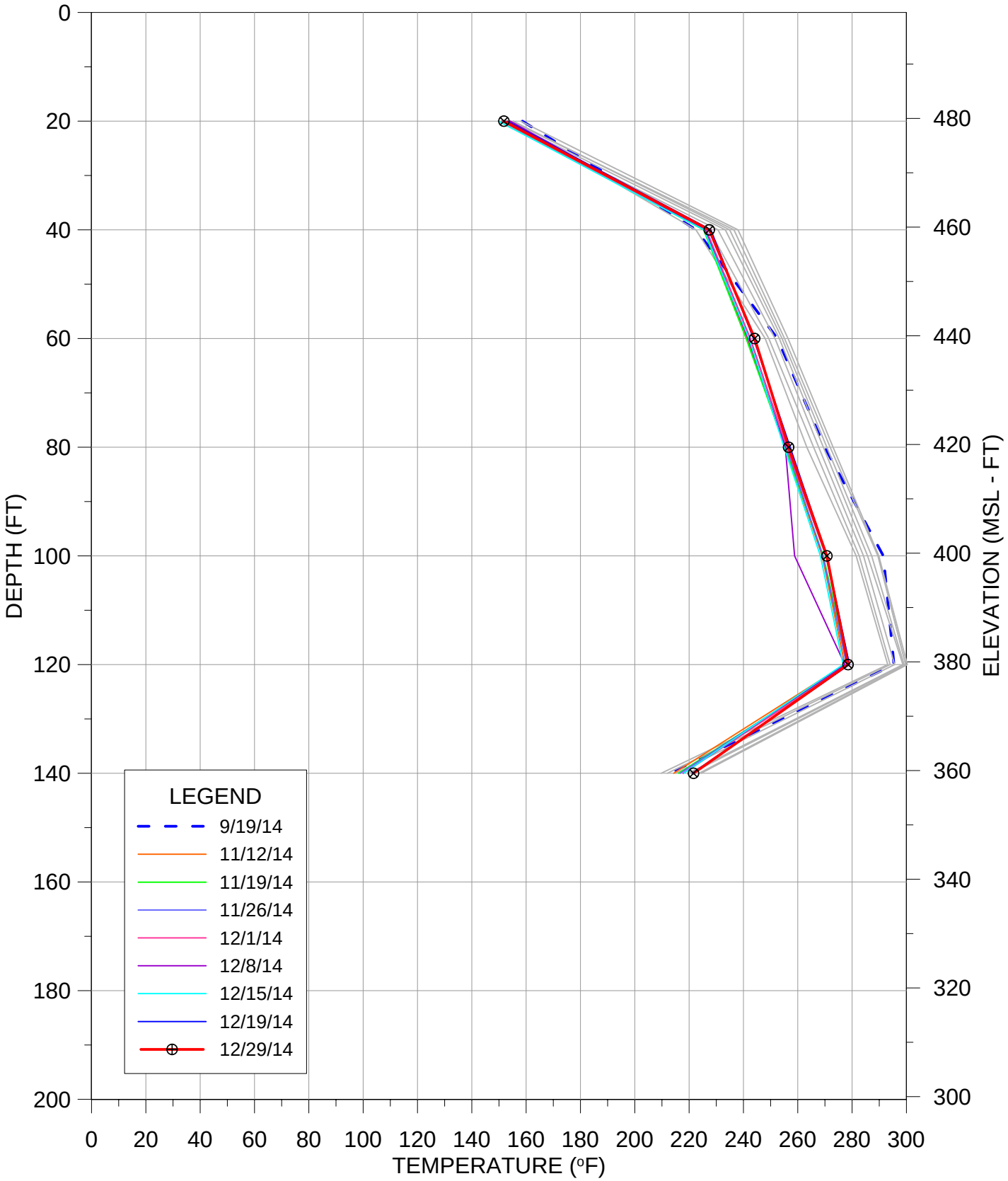

TEMPERATURE VS DEPTH
BRIDGETON LANDFILL

MAXIMUM TEMPERATURES

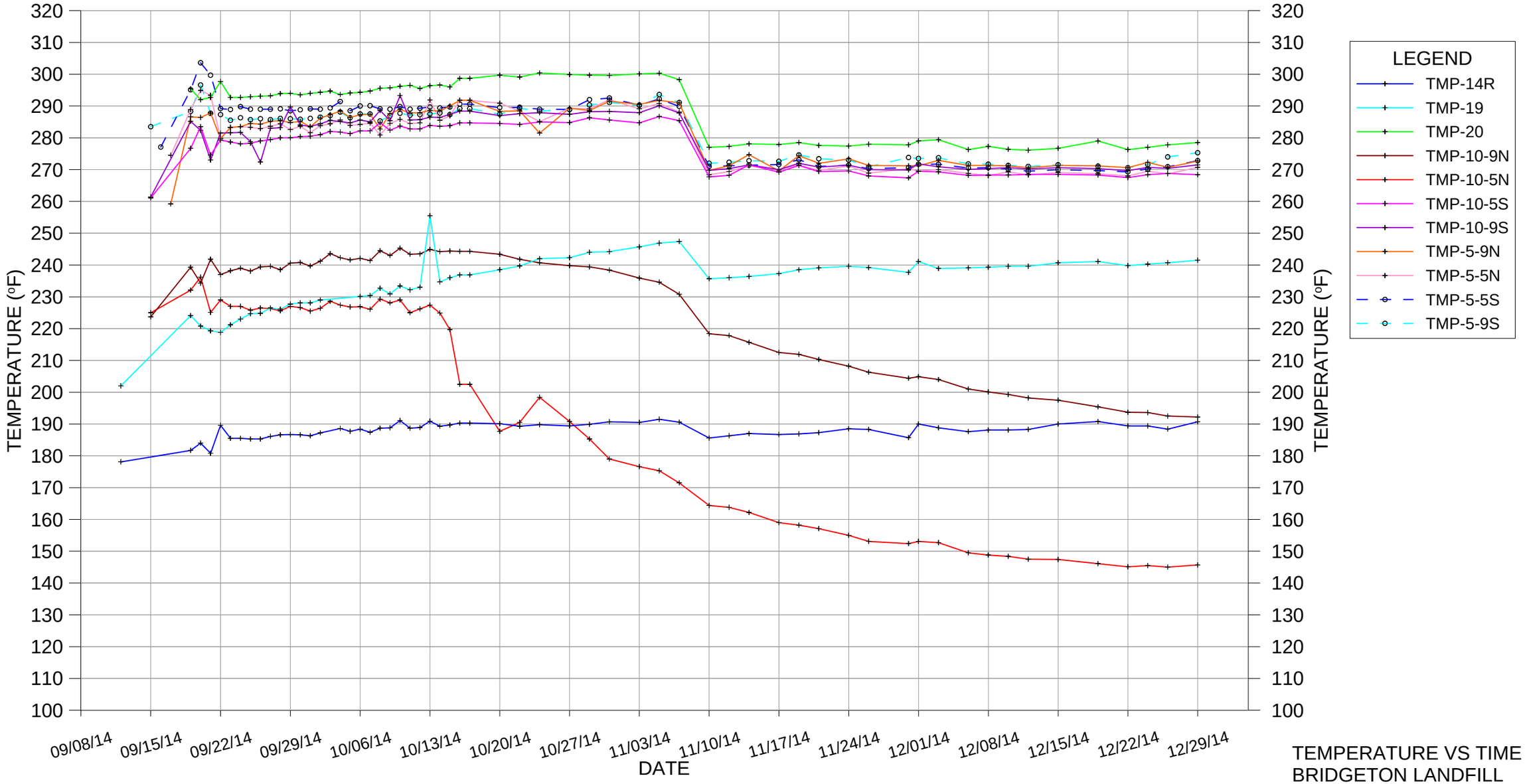

TEMPERATURE VS TIME
BRIDGETON LANDFILL

AVERAGE TEMPERATURES

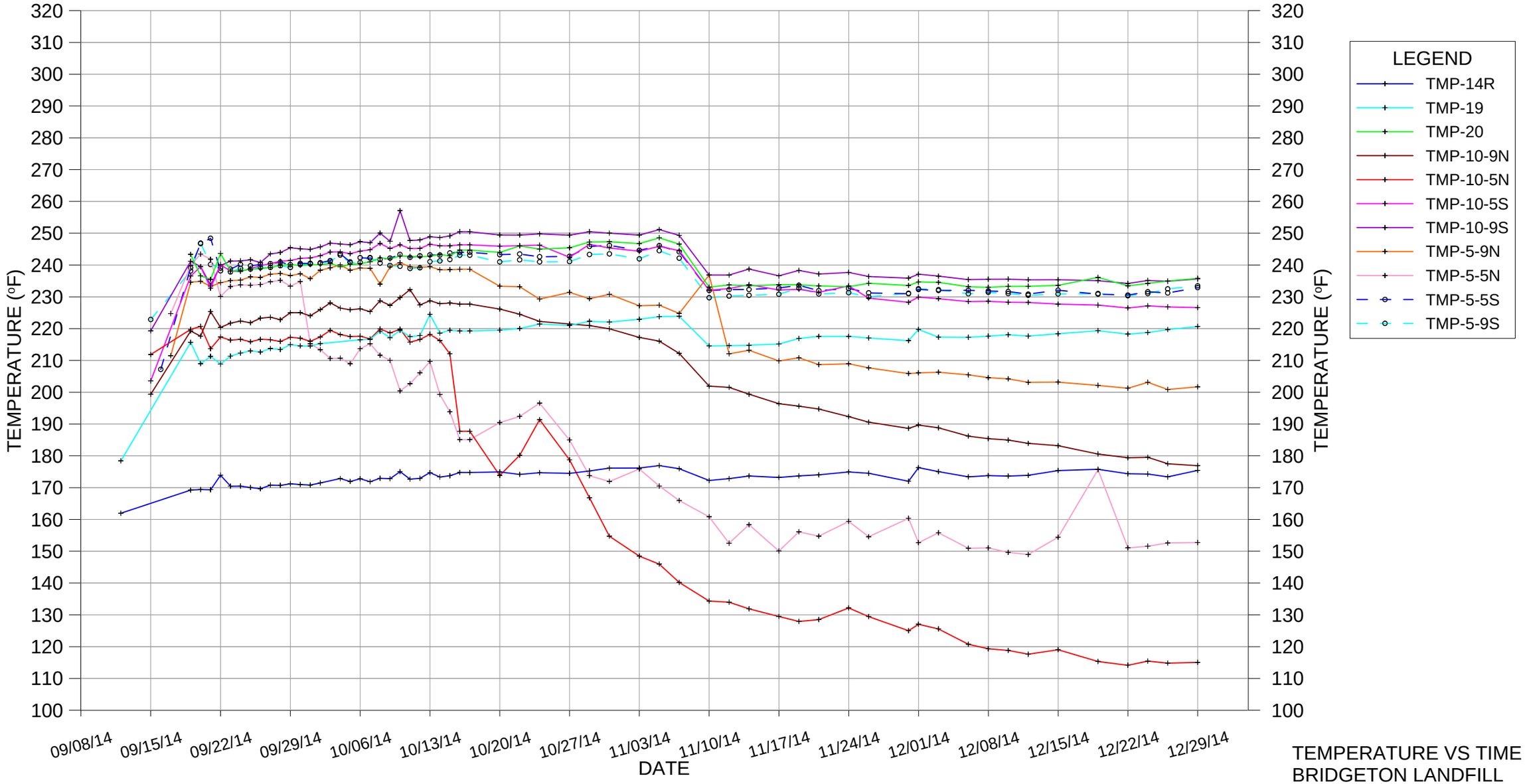

TEMPERATURE VS TIME
BRIDGETON LANDFILL

APPENDIX B – HEAT EXTRACTION POINT DATA

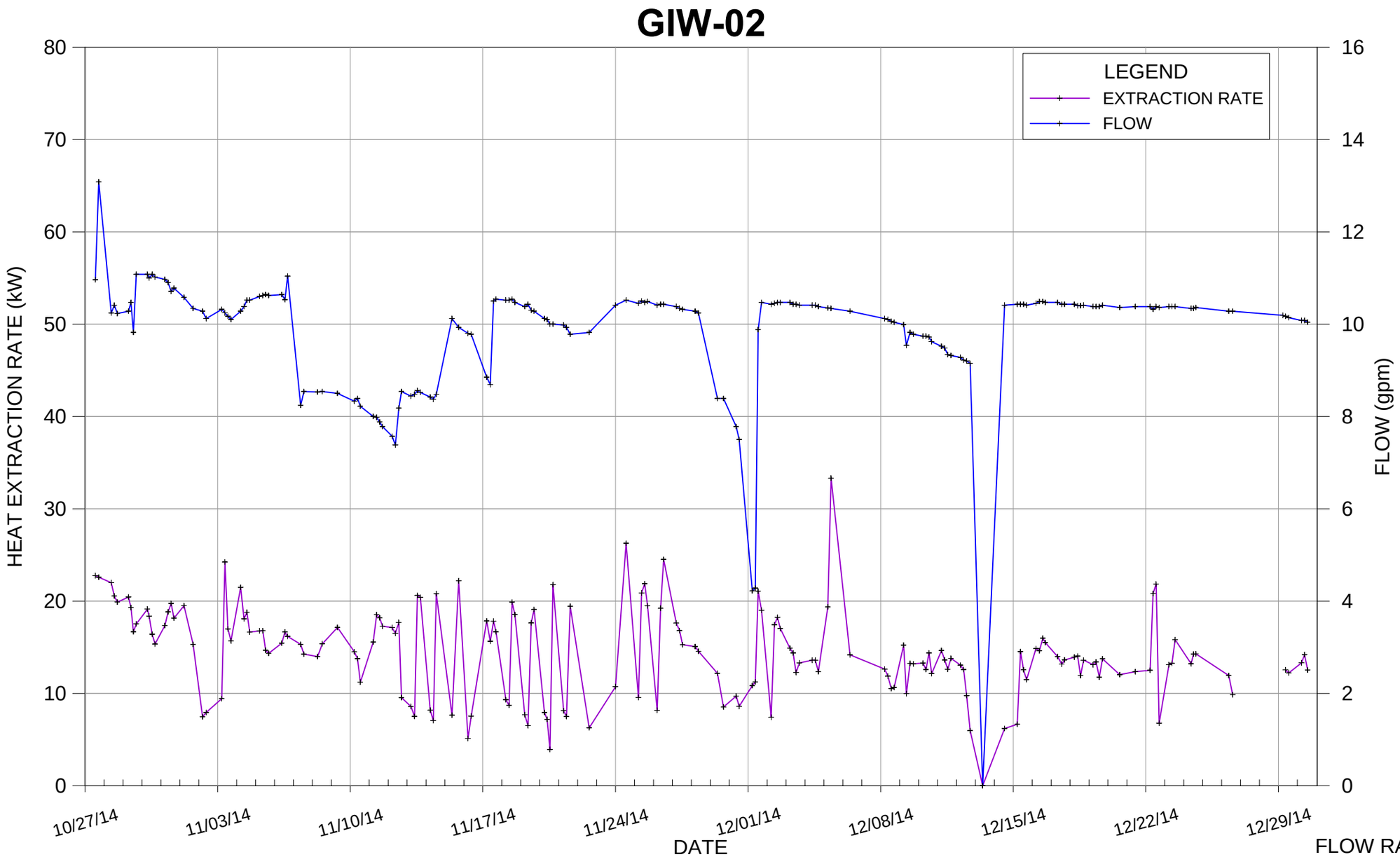

FLOW RATE AND HEAT EXTRACTION VS TIME
BRIDGETON LANDFILL

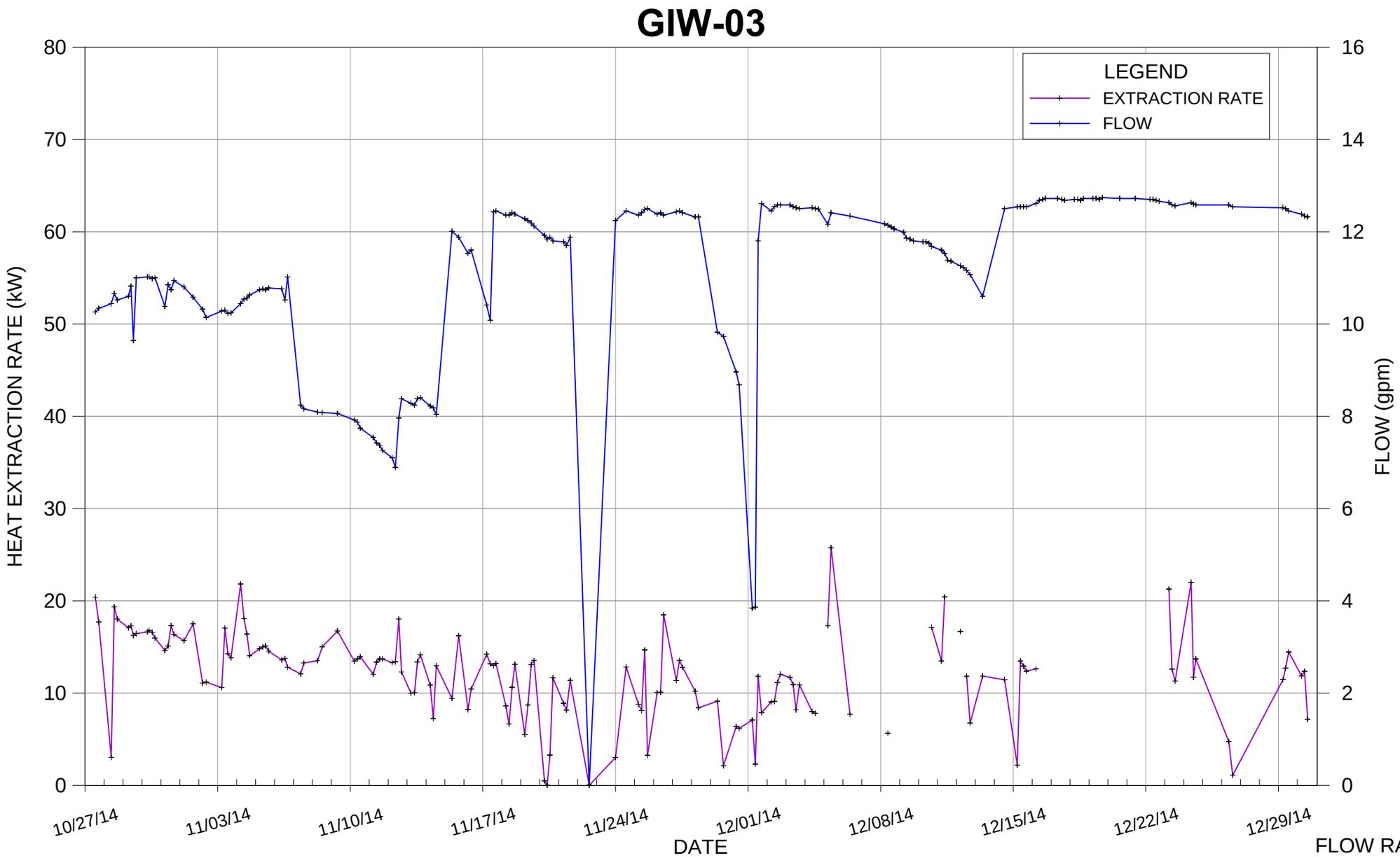

FLOW RATE AND HEAT EXTRACTION VS TIME
BRIDGETON LANDFILL

GIW-04

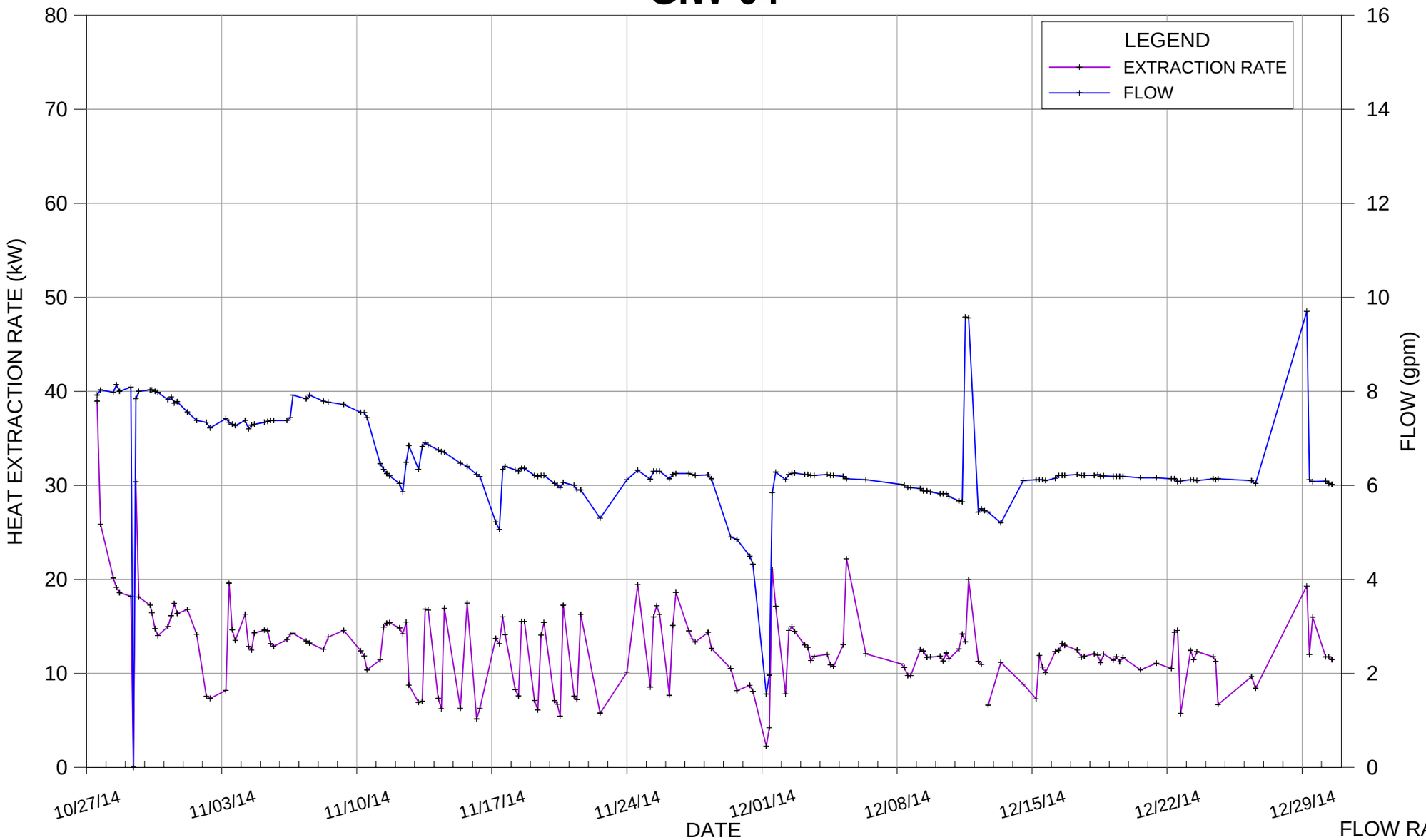

FLOW RATE AND HEAT EXTRACTION VS TIME
BRIDGETON LANDFILL

GIW-05

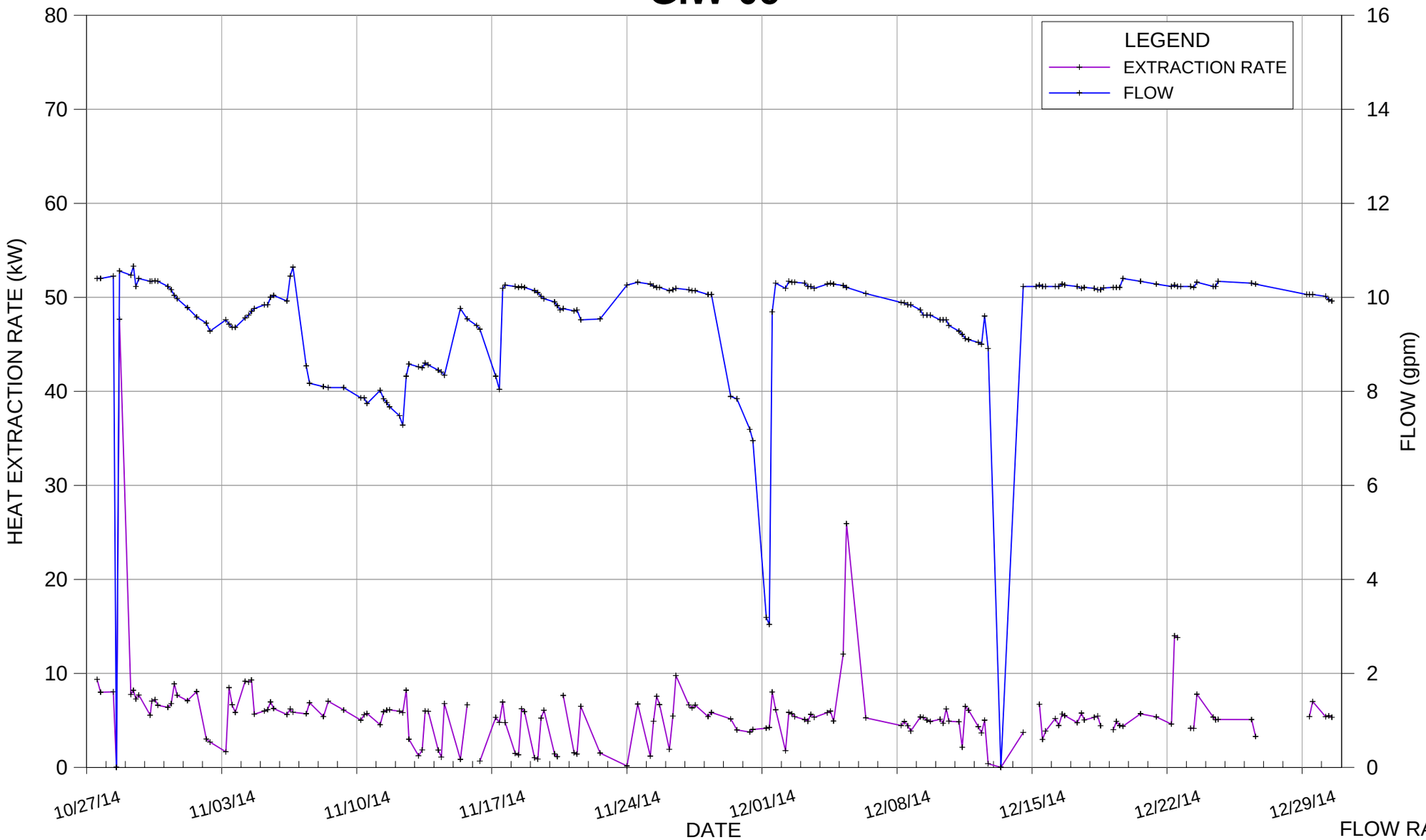

FLOW RATE AND HEAT EXTRACTION VS TIME
BRIDGETON LANDFILL

GIW-06

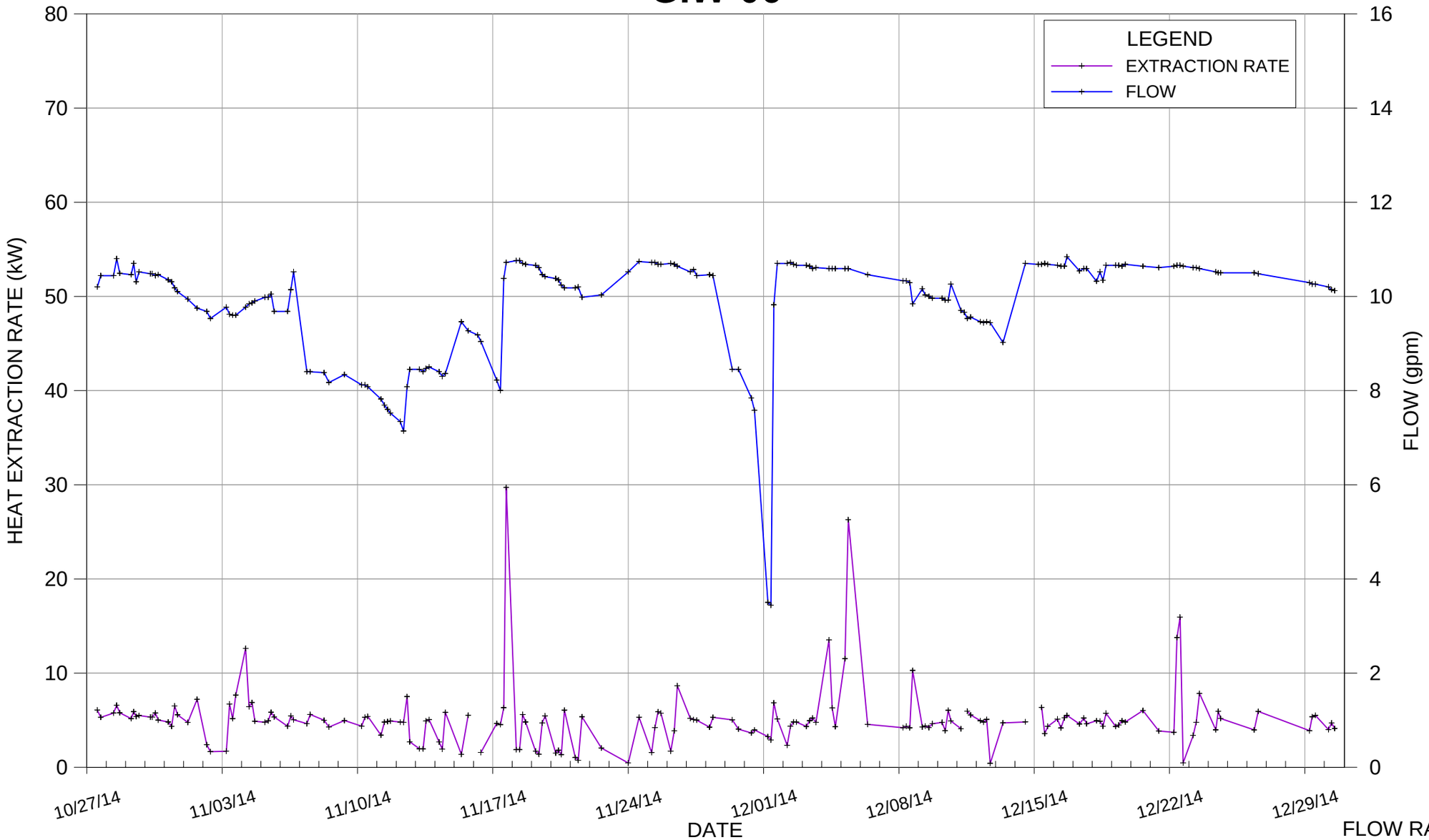

FLOW RATE AND HEAT
EXTRACTION VS TIME
BRIDGETON LANDFILL

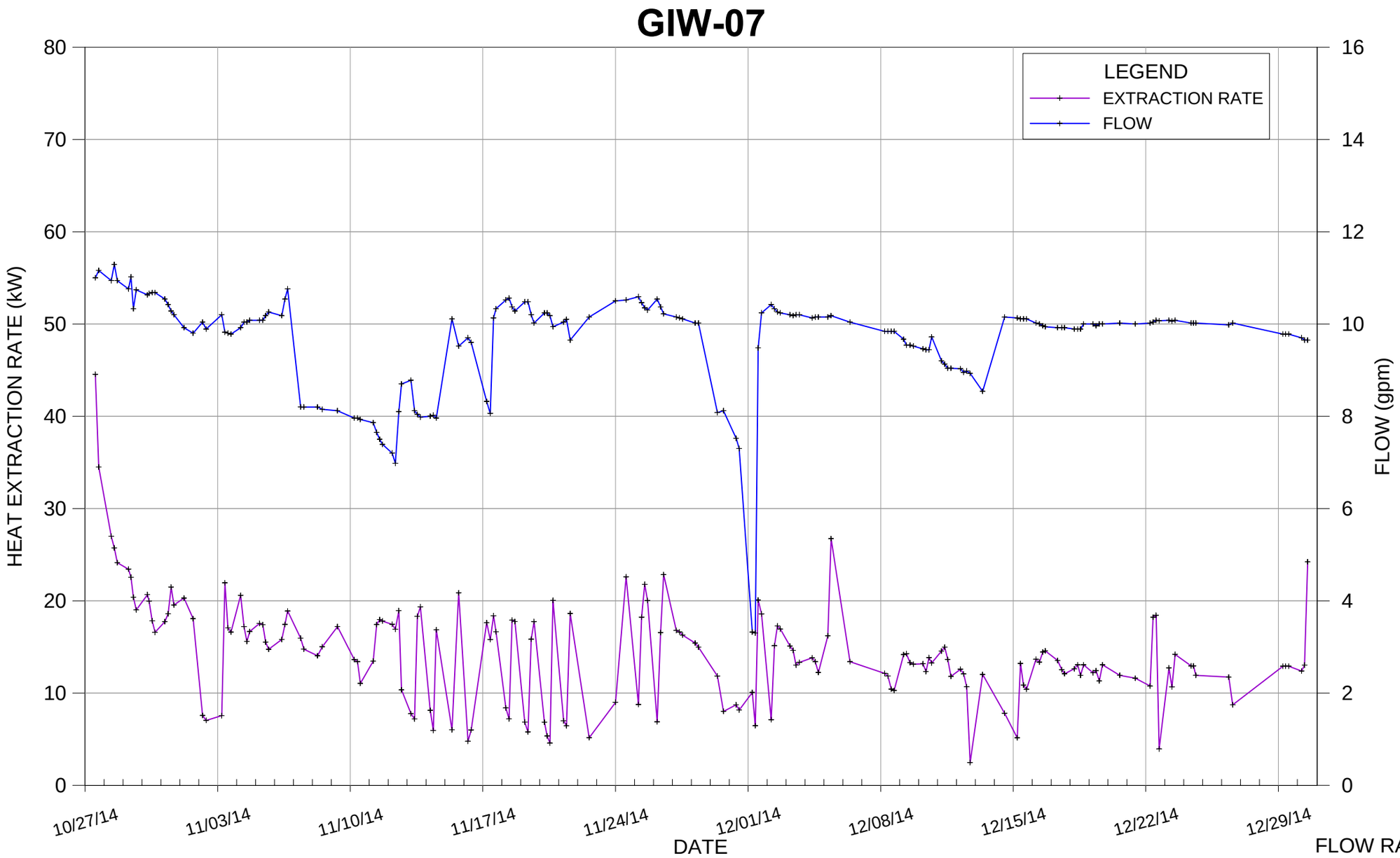

FLOW RATE AND HEAT EXTRACTION VS TIME
BRIDGETON LANDFILL

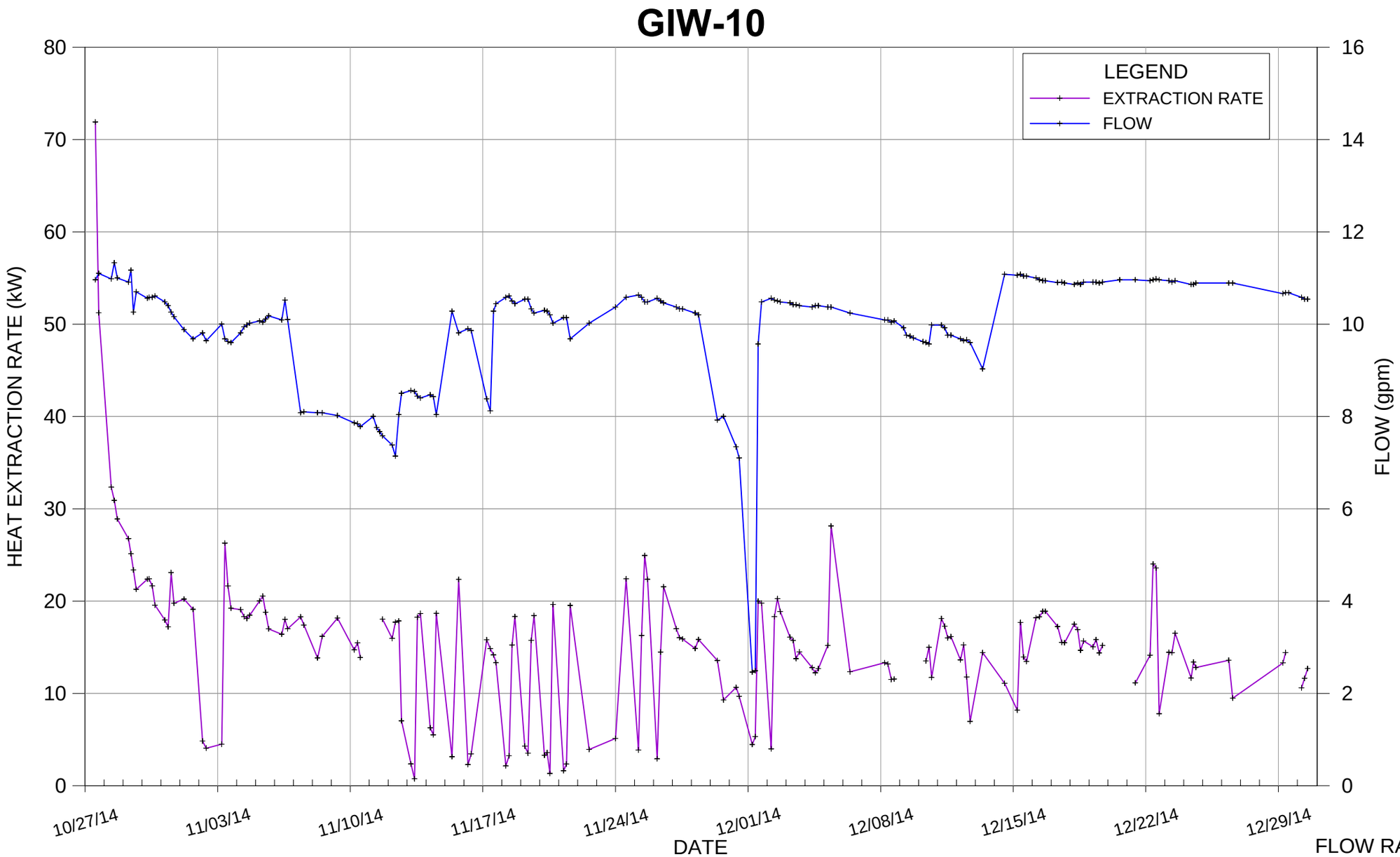

FLOW RATE AND HEAT EXTRACTION VS TIME
BRIDGETON LANDFILL

RATE OF ENERGY REMOVAL

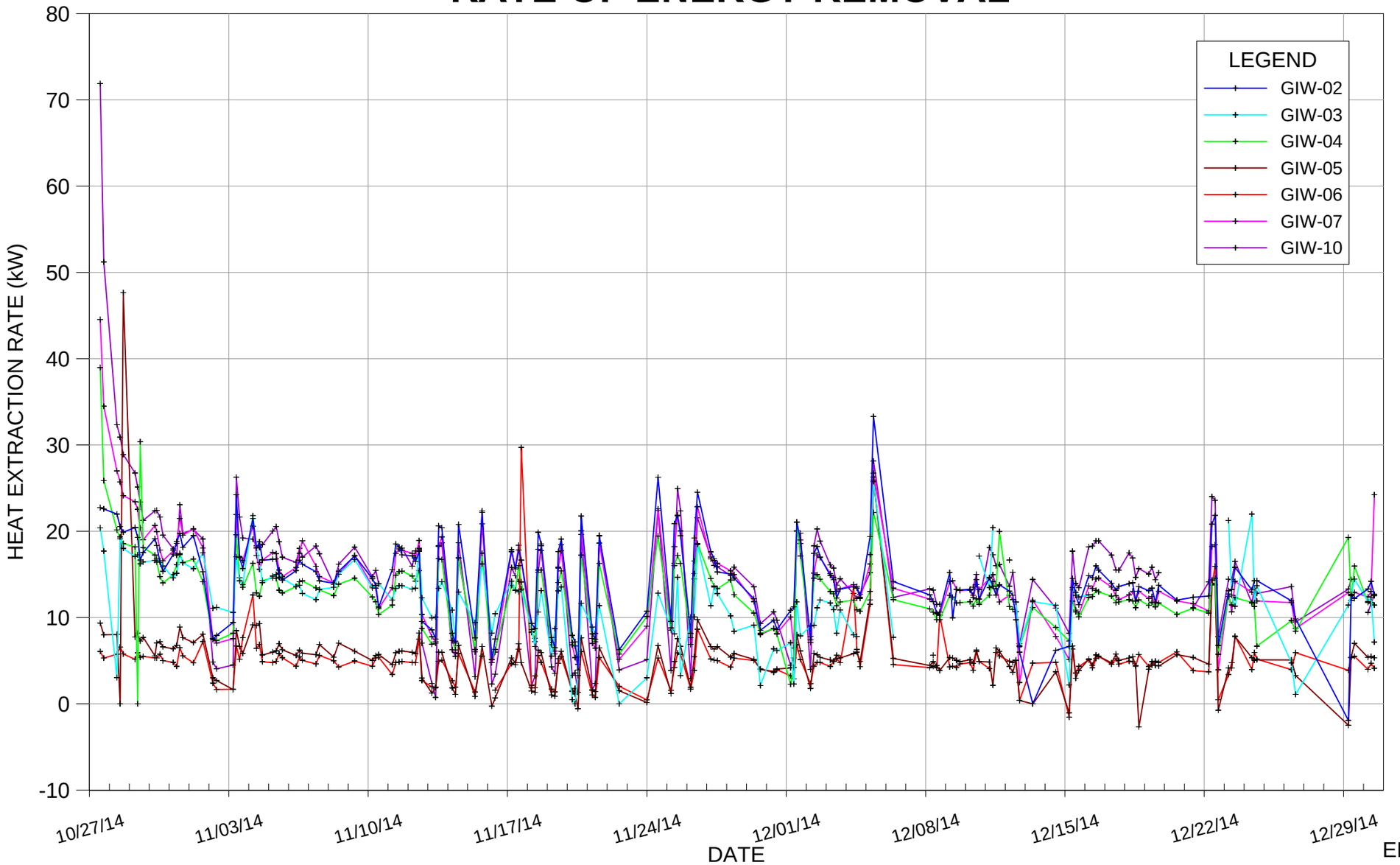

ENERGY RATE VS TIME
BRIDGETON LANDFILL

APPENDIX C – HEAT EXTRACTION SYSTEM AS-BUILT DRAWINGS

AS-BUILT RECORD DRAWINGS FOR

ALTERNATIVE HEAT EXTRACTION PILOT STUDY

BRIDGETON LANDFILL

BRIDGETON, ST. LOUIS COUNTY, MISSOURI

JANUARY 2015

PREPARED FOR:
BRIDGETON LANDFILL, LLC.

Engineering for a Better World
FEEZOR ENGINEERING, INC.

3405 HOLLENBERG DR.
BRIDGETON, MO 63044
TEL. (314) 736-5794

P. J. Carey & Associates, P.C.
SPECIALIZING IN GEOTECHNICS, HYDROGEOLOGY AND WASTE MANAGEMENT
"Services for your bottom line"

5878 VALINE WAY
SUGAR HILL, GA 30518
TEL. (678) 482-5193
FAX. (866) 845-3898

INDEX OF DRAWINGS

001	TITLE PAGE
002	SUMMARY OF SITE WORKS
003	PILOT STUDY - PLAN VIEW
004	HEAT EXTRACTION FACILITY - PLAN VIEW
005	DETAILS - 1
006	DETAILS - 2
007	DETAILS - 3

C:\Users\Diane\Desktop\BT-045 INSTALLATION AS-BUILTS\Heat Extraction System\BT-045-HE-AB-001 (Title Sheet).dwg

CHANGES TO THIS PLAN/DRAWING SET REQUIRE WRITTEN APPROVAL BY FEI.

LEGEND

SOLID WASTE BOUNDARY

0 200 400 Feet

BRIDGETON LANDFILL, LLC 13570 ST. CHARLES ROCK ROAD BRIDGETON, MISSOURI 63044	BRIDGETON LANDFILL ALTERNATIVE HEAT EXTRACTION AS-BUILT DRAWINGS	Engineering for a Better World FEEZOR ENGINEERING, INC.	JANUARY 2015 DESIGNED BY: DMK APPROVED BY: ALK	DRAWING NO.:
FULL SITE PLAN VIEW			REVISION / DATE	**002**
PROJECT NUMBER: BT-045	FILE PATH:			

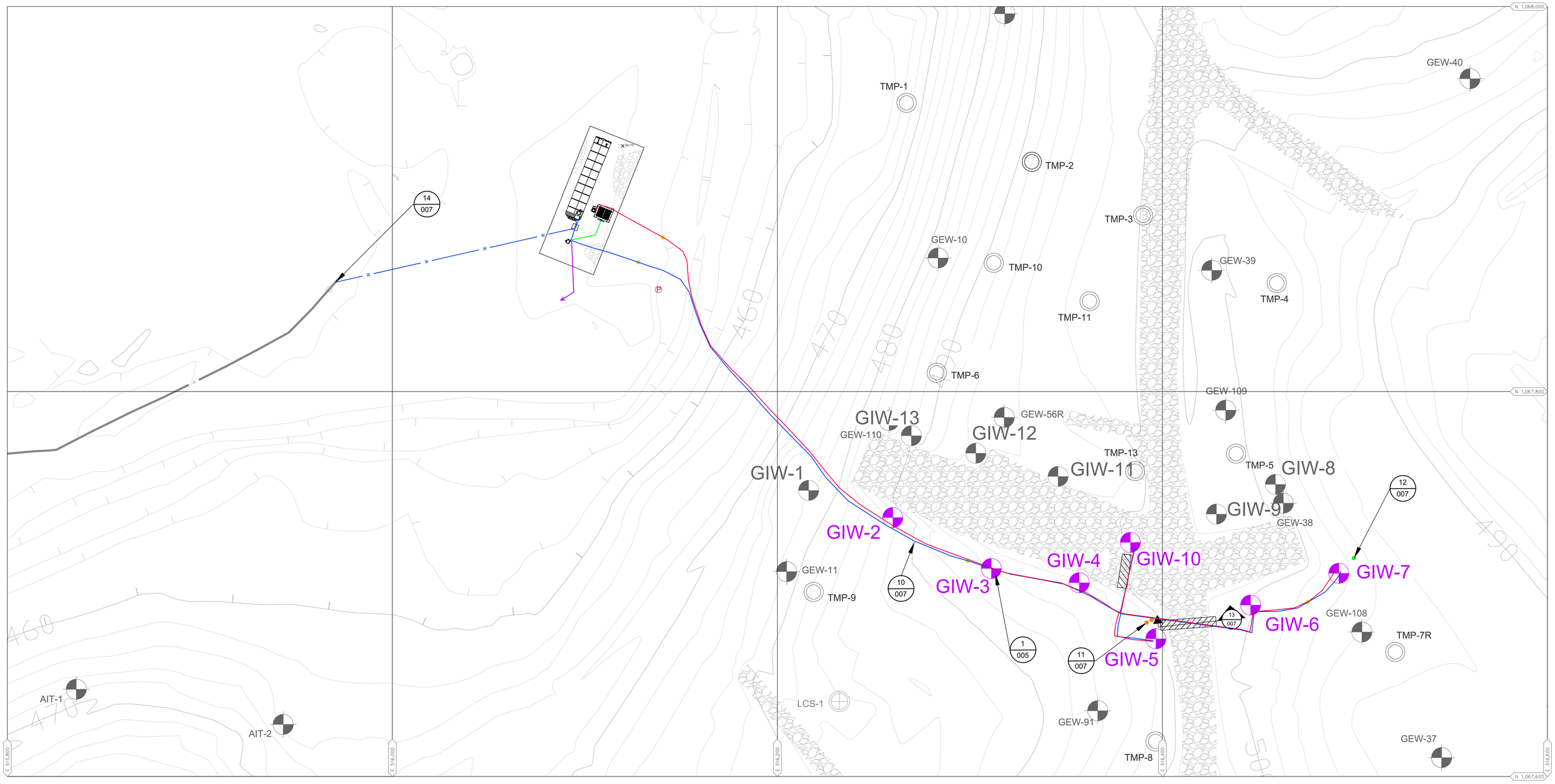

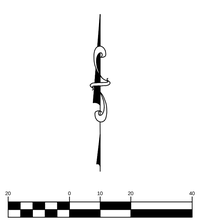

SCALE: 1" = 20'

LEGEND

- EXISTING GRADE (2' CONTOUR)
- 500 EXISTING GRADE (10' CONTOUR)
- EXISTING GAS EXTRACTION WELL
- EXISTING TEMPERATURE MONITOR PROBE
- HEAT EXTRACTION POINT
- 4" COOLING LOOP INFLUENT PIPING
- 2" COOLING LOOP INFLUENT PIPING
- 4" COOLING LOOP EFFLUENT PIPING
- 2" COOLING LOOP EFFLUENT PIPING
- TEMPERATURE MONITORING LOCATION (RESISTANCE TEMPERATURE DETECTOR)
- AIR BLEED VALVE
- BACK PRESSURE VALVE
- (P) EXISTING ELECTRIC PANEL
- PROPOSED ELECTRICAL SERVICE
- W PROPOSED 1" WATER LINE
- NALCO SYSTEM FEED LINE
- 2" BLOWDOWN DISCHARGE TO MSD

NOTES:

1.) AERIAL TOPOGRAPHY WAS PROVIDED BY COOPER AERIAL SURVEYS CO. AND IS DATED MARCH 20, 2014.

BRIDGETON LANDFILL, LLC 13570 ST. CHARLES ROCK ROAD BRIDGETON, MISSOURI 63044	BRIDGETON LANDFILL ALTERNATIVE HEAT EXTRACTION AS-BUILT DRAWINGS	Engineering for a Better World FEEZOR ENGINEERING, INC.	JANUARY 2015 DESIGNED BY: BJV APPROVED BY: ALK
PILOT STUDY - PLAN VIEW			
PROJECT NUMBER: BT-045	FILE PATH: C:\Users\DaveGreiwe\BT-045 INSTALLATION AS-BUILTS\Heat Extraction System\BT-045-HE-AB-003-004 (PILOT STUDY - PLAN VIEW).dwg		REVISION / DATE

DRAWING NO.: 003

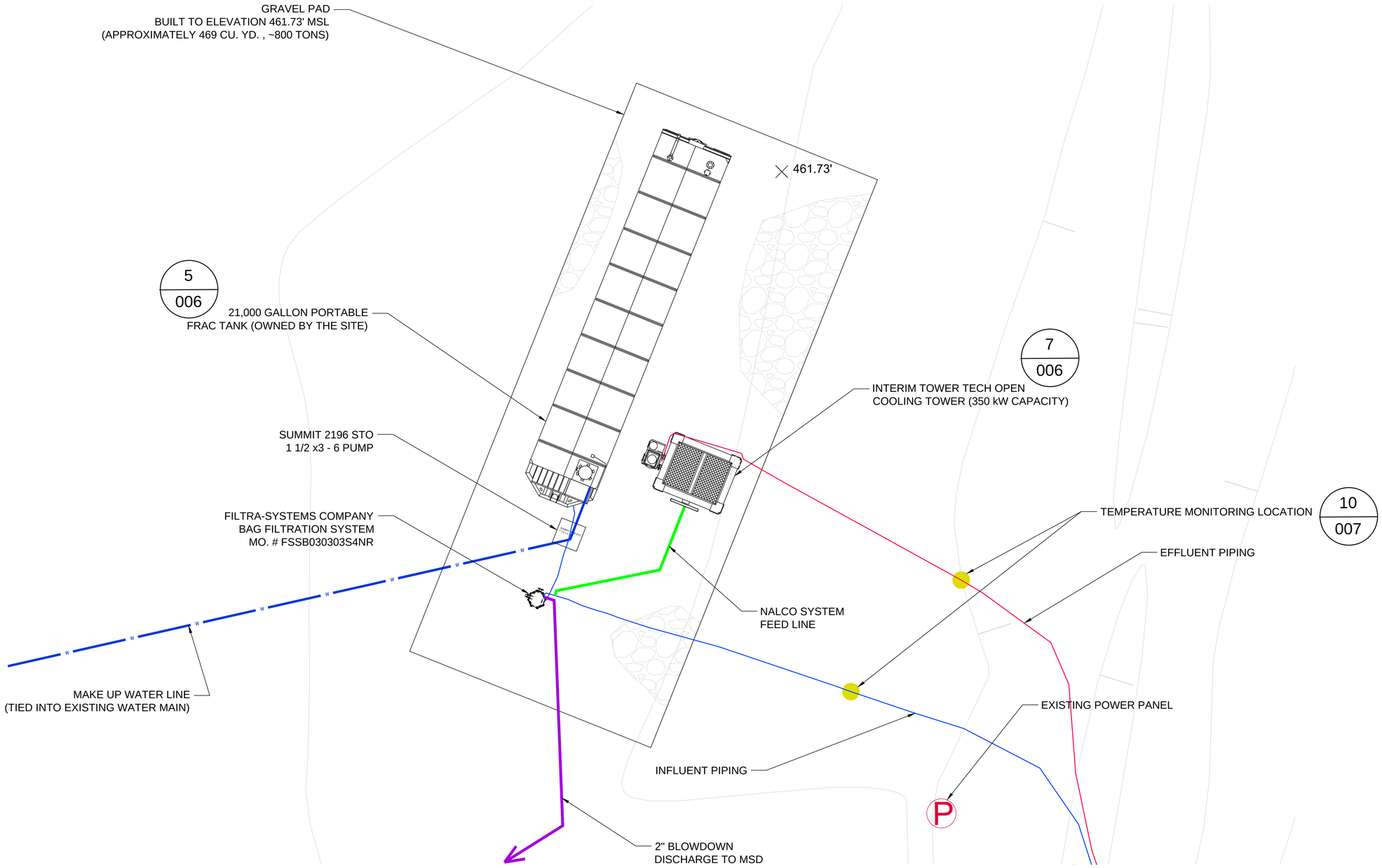

LEGEND

- EXISTING GRADE (2' CONTOUR)
- 500 EXISTING GRADE (10' CONTOUR)
- EXISTING GAS EXTRACTION WELL
- EXISTING TEMPERATURE MONITOR PROBE
- HEAT EXTRACTION POINT
- 4" COOLING LOOP INFLUENT PIPING
- 2" COOLING LOOP INFLUENT PIPING
- 4" COOLING LOOP EFFLUENT PIPING
- 2" COOLING LOOP EFFLUENT PIPING
- TEMPERATURE MONITORING LOCATION (RESISTANCE TEMPERATURE DETECTOR)
- AIR BLEED VALVE
- BACK PRESSURE VALVE
- P EXISTING ELECTRIC PANEL
- PROPOSED ELECTRICAL SERVICE
- W PROPOSED 1" WATER LINE
- NALCO SYSTEM FEED LINE
- 2" BLOWDOWN DISCHARGE TO MSD

NOTES:

1.) AERIAL TOPOGRAPHY WAS PROVIDED BY COOPER AERIAL SURVEYS CO. AND IS DATED MARCH 20, 2014.

BRIDGETON LANDFILL, LLC 13570 ST. CHARLES ROCK ROAD BRIDGETON, MISSOURI 63044	BRIDGETON LANDFILL ALTERNATIVE HEAT EXTRACTION AS-BUILT DRAWINGS	Engineering for a Better World FEEZOR ENGINEERING, INC.	JANUARY 2015 DESIGNED BY: BJV APPROVED BY: ALK	DRAWING NO.: 004
COOLING LOOP INSTALLATION - PLAN VIEW			REVISION / DATE	
PROJECT NUMBER: BT-045	FILE PATH: C:\Users\DaveDesktop\BT-045 INSTALLATION AS-BUILT\Heat Extraction System\BT-045-HE-AB-003-DW-PLOT STUDY - PLAN VIEW1.dwg			

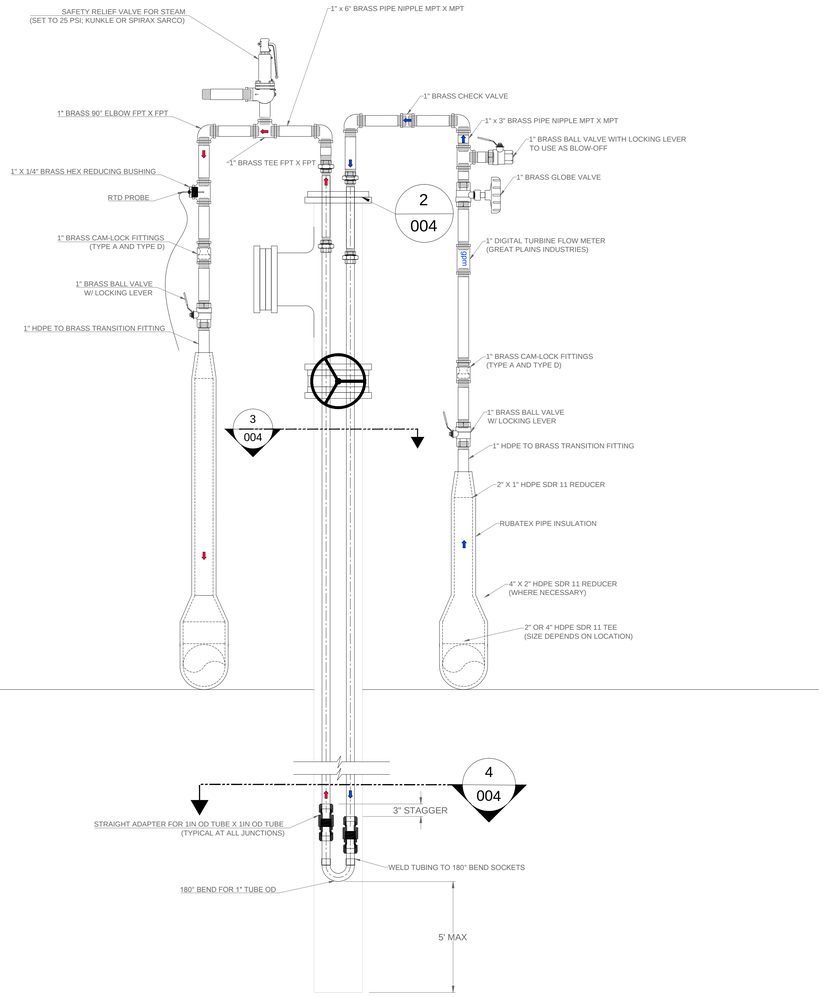

1 / 003 NTS

HEAT EXTRACTION POINT

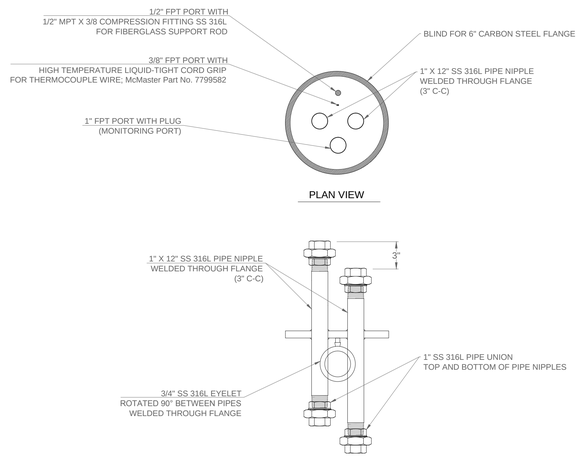

2 / 004 NTS

HEAT EXTRACTION FLANGE COMPONENTS

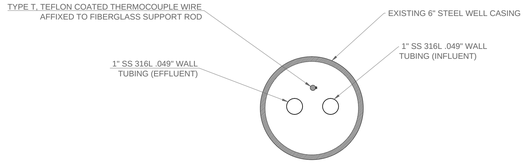

3 / 004 NTS

HEAT EXTRACTION POINT CROSS-SECTION

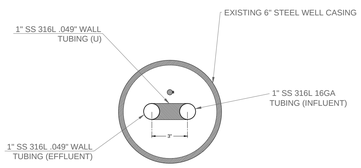

4 / 004 NTS

HEAT EXTRACTION POINT CROSS-SECTION

BRIDGETON LANDFILL, LLC 13570 ST. CHARLES ROCK ROAD BRIDGETON, MISSOURI 63044	BRIDGETON LANDFILL ALTERNATIVE HEAT EXTRACTION AS-BUILT DRAWINGS	Engineering for a Better World FEEZOR ENGINEERING, INC.	JANUARY 2015 DESIGNED BY: BJV APPROVED BY: ALK	DRAWING NO.: 005
HEAT EXTRACTION POINT - DETAILS				
PROJECT NUMBER: BT-045	FILE PATH: C:\Users\Diane\Desktop\BT-045 INSTALLATION AS-BUILTS\Heat Extraction System\BT-045-HE-AB-005 (Details).dwg		REVISION / DATE	

5 / 004 WATER STORAGE TANK - 3500 GALLON CAPACITY
NTS

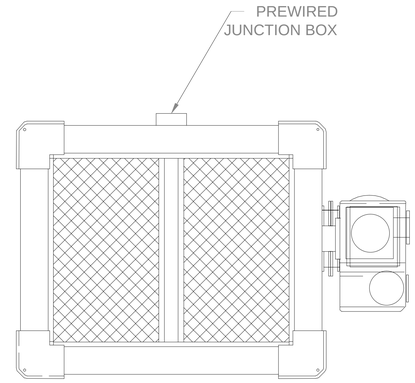

7 / 004 OPEN EVAPORATIVE COOLING TOWER (PLAN VIEW)
NTS

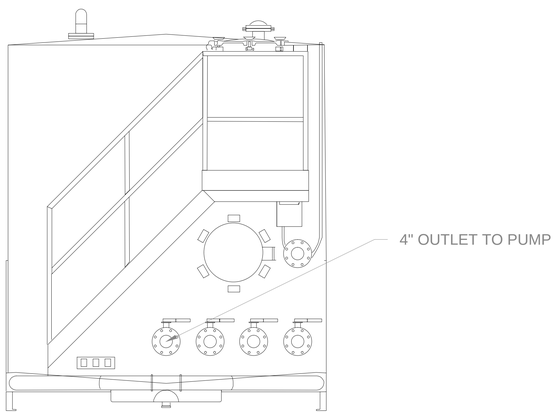

6 / 006 WATER STORAGE TANK - CROSS SECTION
NTS

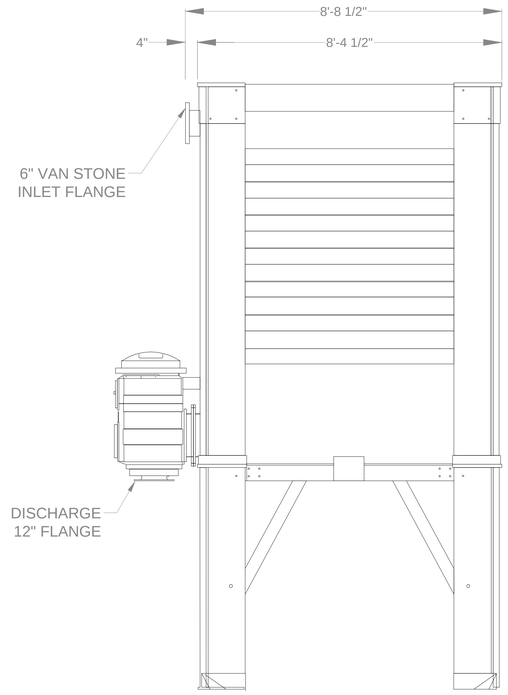

8 / 006 COOLING TOWER (FACE 1)
NTS

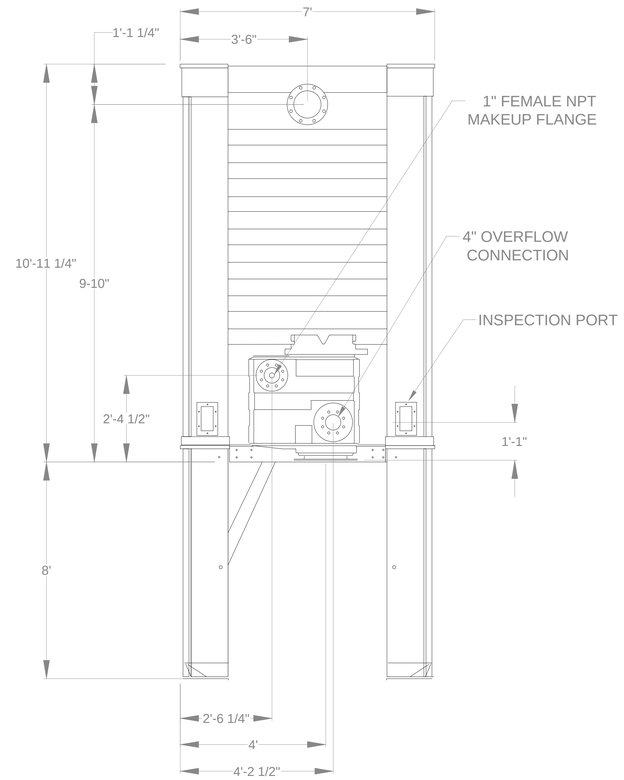

9 / 006 COOLING TOWER (FACE 2)
NTS

BRIDGETON LANDFILL, LLC 13570 ST. CHARLES ROCK ROAD BRIDGETON, MISSOURI 63044	BRIDGETON LANDFILL ALTERNATIVE HEAT EXTRACTION AS-BUILT DRAWINGS	Engineering for a Better World FEEZOR ENGINEERING, INC.	JANUARY 2015 DESIGNED BY: BJV APPROVED BY: ALK	DRAWING NO.: 006
HEAT EXTRACTION POINT - DETAILS 2				
PROJECT NUMBER: BT-045	FILE PATH: C:\Users\Diane\Desktop\BT-045 INSTALLATION AS-BUILT\Heat Extraction System\BT-045-HE-AB-006 (Details2).dwg		REVISION	DATE

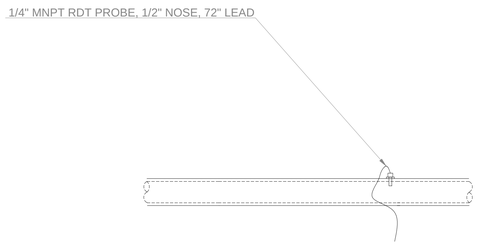

10 / 003 TEMPERATURE MONITORING LOCATION
NTS

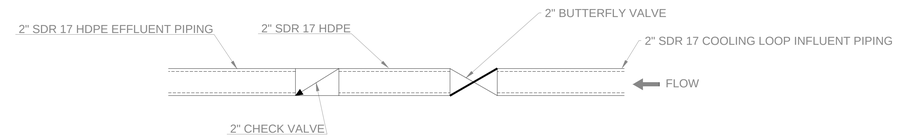

12 / 003 CONTROL VALVES
NTS

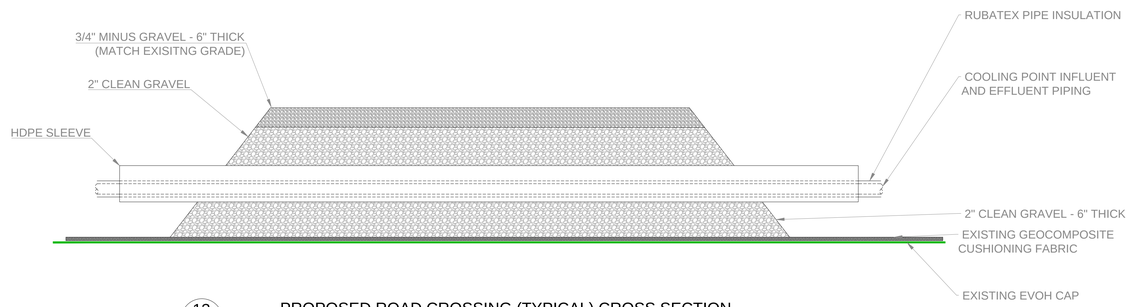

13 / 003 PROPOSED ROAD CROSSING (TYPICAL) CROSS SECTION
NTS

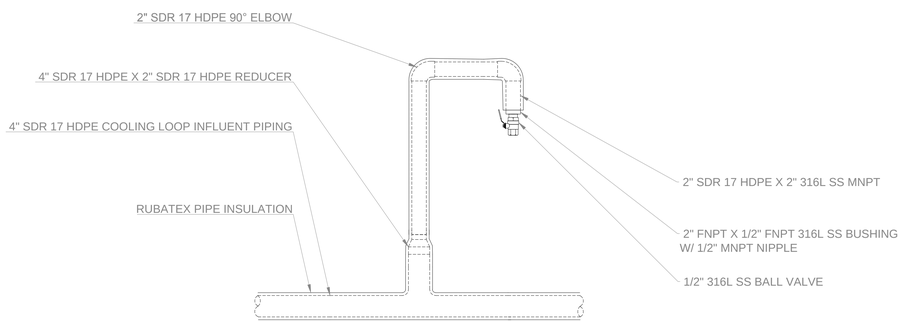

11 / 003 AIR BLEED VALVE
NTS

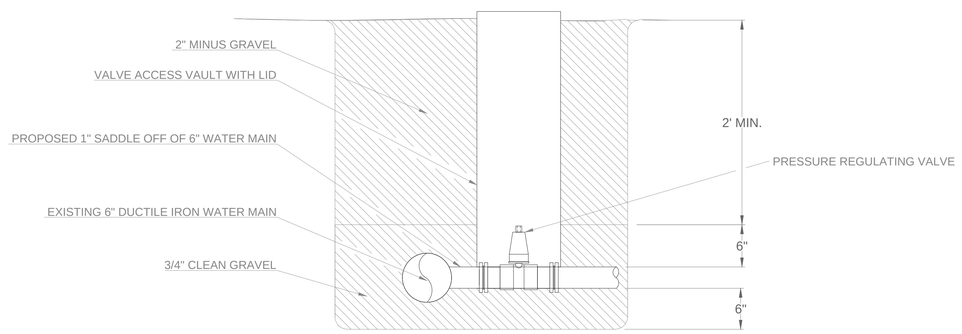

14 / 003 WATERMAIN TIE IN W/ PRESSURE REGULATING VALVE
NTS

NOTES:
1) EXISTING 6" DUCTILE IRON WATER MAIN HAS APPROXIMATELY 100 PSI.
2) PRESSURE REGULATING VALVE TO BE SET BETWEEN 15-50 PSI.

BRIDGETON LANDFILL, LLC 13570 ST. CHARLES ROCK ROAD BRIDGETON, MISSOURI 63044	BRIDGETON LANDFILL ALTERNATIVE HEAT EXTRACTION AS-BUILT DRAWINGS	Engineering for a Better World FEEZOR ENGINEERING, INC.	JANUARY 2015 DESIGNED BY: BJV APPROVED BY: ALK	DRAWING NO.:
COOLING LOOP INSTALLATION - DETAILS 3				007
PROJECT NUMBER: BT-045	FILE PATH: C:\Users\Diane\Desktop\BT-045 INSTALLATION AS-BUILT\Heat Extraction System\BT-045-HE-AB-007 (Details3).dwg		REVISION DATE	

APPENDIX D – TEMPERATURE MONITORING PROBE AS-BUILT DRAWINGS

AS-BUILT RECORD DRAWINGS FOR

2014 TEMPERATURE MONITORING PROBE INSTALLATION

BRIDGETON LANDFILL

BRIDGETON, ST. LOUIS COUNTY, MISSOURI

JANUARY 2015

PREPARED FOR:
BRIDGETON LANDFILL, LLC.

Engineering for a Better World
FEEZOR ENGINEERING, INC.

3405 HOLLENBERG DRIVE
BRIDGETON, MO 63044
TEL. (314) 736-5794

P. J. Carey & Associates, P.C.
SPECIALIZING IN GEOTECHNICS, HYDROGEOLOGY AND WASTE MANAGEMENT
"Services for your bottom line"

5878 VALINE WAY
SUGAR HILL, GA 30518
TEL. (678) 482-5193
FAX. (866) 845-3898

INDEX OF DRAWINGS

001	TITLE PAGE
002	SITE PLAN
003	TMP INSTALLATION - PLAN VIEW
004	DETAILS
005	DETAILS

CHANGES TO THIS PLAN/DRAWING SET REQUIRE WRITTEN APPROVAL BY FEI.

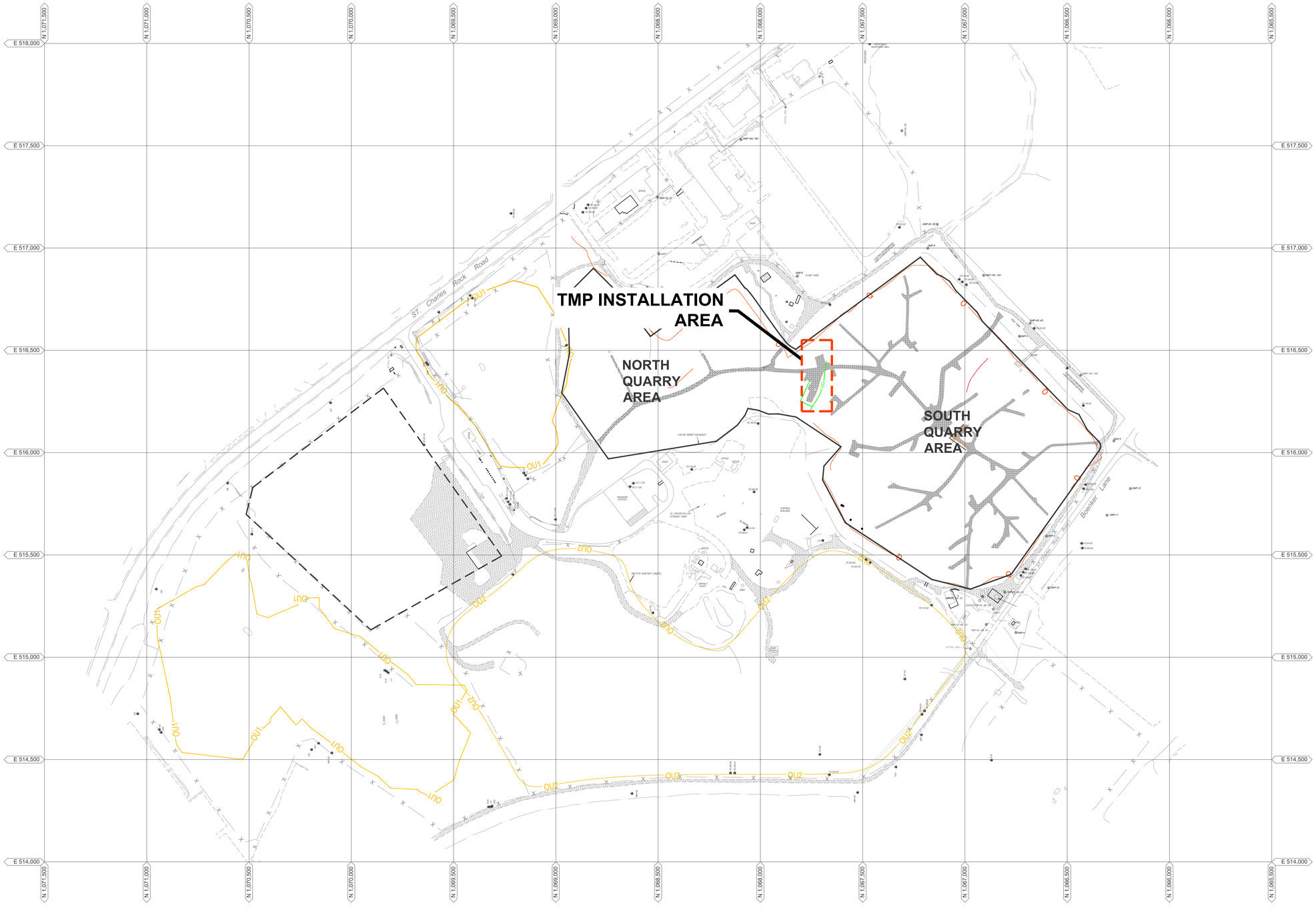

LEGEND

SOLID WASTE BOUNDARY

0 200 400 Feet

BRIDGETON LANDFILL, LLC 13570 ST. CHARLES ROCK ROAD BRIDGETON, MISSOURI 63044	2014 TEMPERATURE MONITORING PROBE INSTALLATION AS-BUILT DRAWINGS	JANUARY 2015 DESIGNED BY: DMK APPROVED BY: ALK	DRAWING NO.:
FULL SITE PLAN VIEW	FEEZOR ENGINEERING, INC. Engineering for a Better World	REVISION / DATE	002
PROJECT NUMBER: BT-045 FILE PATH:			

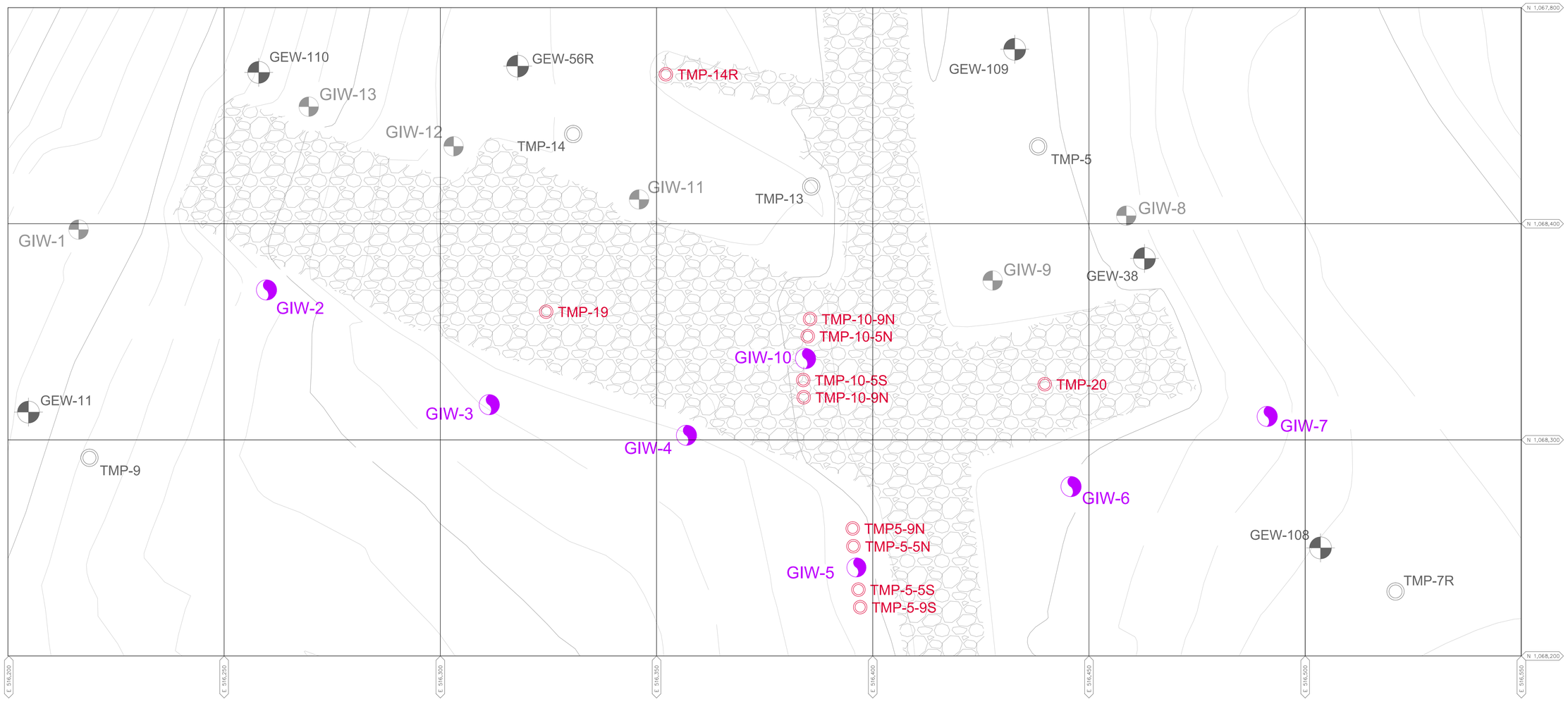

TMP INSTALLATION			
ID	Northing	Easting	Depth (ft)
TMP-19	1067729.43	516324.34	140
TMP-14R	1067784.62	516352.17	140
TMP-20	1067712.59	516439.87	140
TMP-5-9S	1067661.16	516397.18	100
TMP-5-5S	1067665.2	516396.79	100
TMP-5-5N	1067675.28	516395.69	100
TMP-5-9N	1067679.41	516395.37	100
TMP-10-9S	1067709.77	516384.13	100
TMP-10-5S	1067713.85	516384	100
TMP-10-5N	1067723.9	516384.95	100
TMP-10-9N	1067727.77	516385.53	100

10 0 5 10 20

SCALE: 1" = 10'

LEGEND

- EXISTING GRADE (2' CONTOUR)
- 500 EXISTING GRADE (10' CONTOUR)
- EXISTING GAS EXTRACTION WELL
- EXISTING GAS INTERCEPTOR WELL
- EXISTING TEMPERATURE MONITORING PROBE
- AS-BUILT HEAT EXTRACTION AT GAS INTERCEPTOR WELL
- AS-BUILT TEMPERATURE MONITORING PROBE

NOTES:
1.) AERIAL TOPOGRAPHY WAS PROVIDED BY COOPER AERIAL SURVEYS CO. AND IS DATED MARCH 20, 2014.

BRIDGETON LANDFILL, LLC
13570 ST. CHARLES ROCK ROAD
BRIDGETON, MISSOURI 63044

2014 TEMPERATURE MONITORING PROBE INSTALLATION AS-BUILT DRAWINGS

FEEZOR ENGINEERING, INC.
Engineering for a Better World

JANUARY 2015
DESIGNED BY: AMR
APPROVED BY: ALK

DRAWING NO.: 003

TMP INSTALLATION PLAN VIEW

PROJECT NUMBER: BT-045 | FILE PATH:

REVISION | DATE

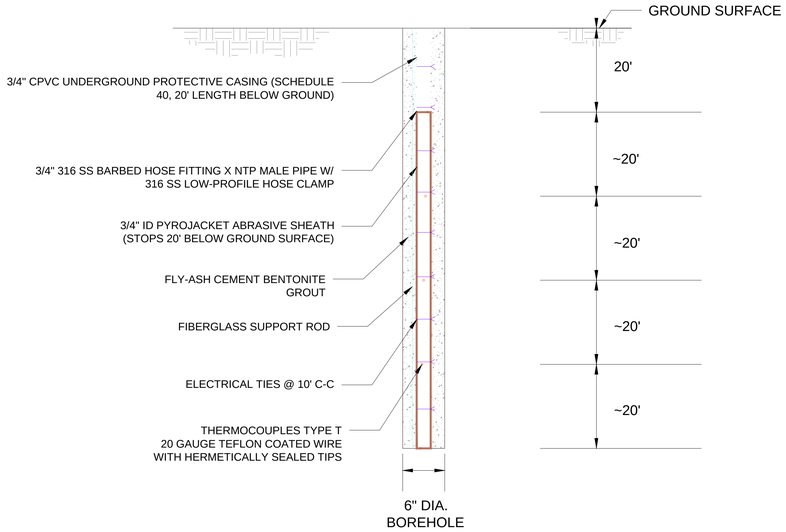

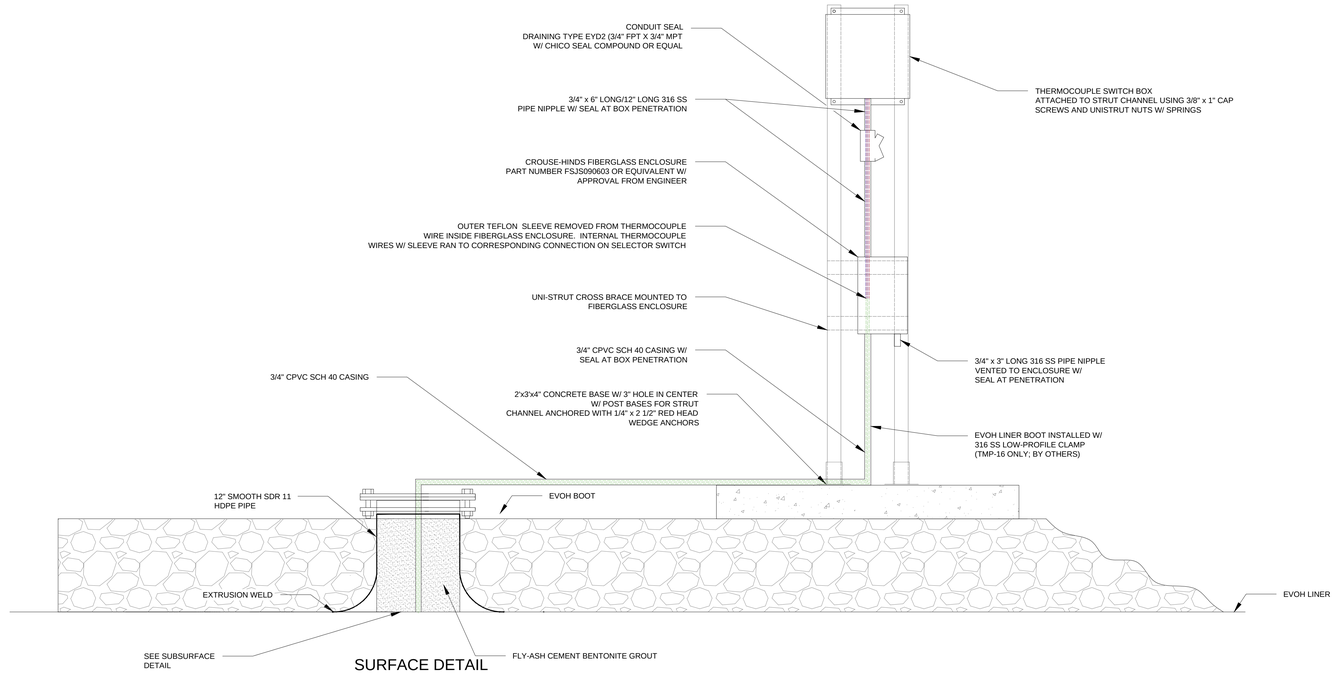

1 / 003 TEMPERATURE MONITORING PROBE (TMP) (TMP-14R,19 and 20)

NTS

NOTES:

1.) SWITCH BOX IS AUSTIN ELECTRICAL ENCLOSURE AB-10 x 10 x 6 - PANEL IS AB-1010JP WITH JIC SWING OUT PANEL KIT - MOUNTED WITH HINGE ON RIGHT
2.) HOLE FOR ROTARY SWITCH ACCOMODATES SW142G-12-B
3.) SWITCH MOUNTED LEFT OF CENTER TO ALLOW FULL ACCESS TO CONNECTIONS WHEN PANEL IS SWUNG OPEN
4.) ALL PERFORATIONS AND CLAMPS NEMA 4 RATED
5.) FIBERGLASS ENCLOSURES AND SWITCH BOX PENETRATIONS SEALED USING NEMA 4 RATED MYER'S HUB (3/4" FPT FOR JUNCTION WITH PIPE NIPPLES.

BRIDGETON LANDFILL, LLC 13570 ST. CHARLES ROCK ROAD BRIDGETON, MISSOURI 63044	2014 TEMPERATURE MONITORING PROBE INSTALLATION AS-BUILT DRAWINGS	Engineering for a Better World FEEZOR ENGINEERING, INC.	JANUARY 2015 DESIGNED BY: AMR APPROVED BY: ALK	DRAWING NO.:
TMP INSTALLATION - DETAILS				004
PROJECT NUMBER: BT-045 FILE PATH:			REVISION DATE	

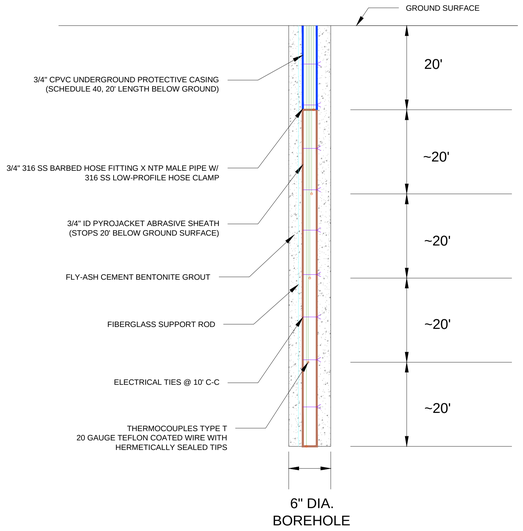

TMP SUBSURFACE DETAIL

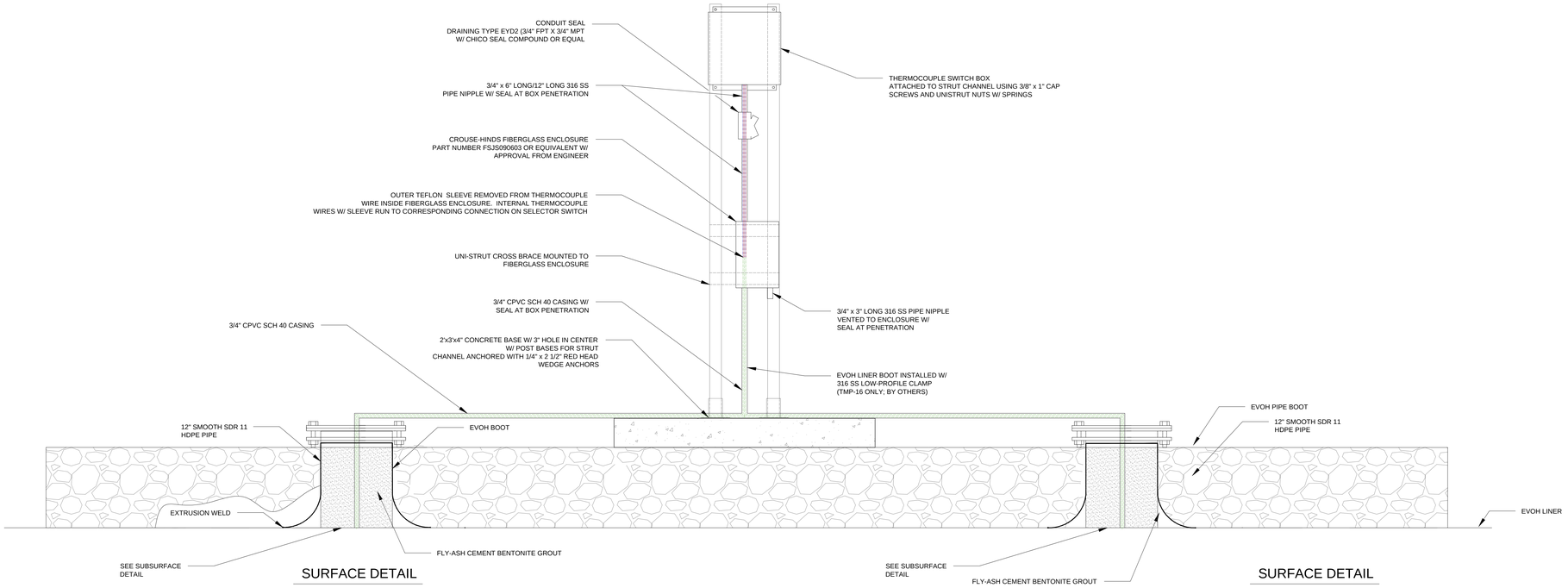

2
003

TEMPERATURE MONITORING PROBE (TMP) (GIW5,GIW10)

NTS

NOTES:

1.) SWITCH BOX IS AUSTIN ELECTRICAL ENCLOSURE AB-10 x 10 x 6 - PANEL IS AB-1010JP WITH JIC SWING OUT PANEL KIT - MOUNTED WITH HINGE ON RIGHT
2.) HOLE FOR ROTARY SWITCH ACCOMODATES SW142G-12-B
3.) SWITCH MOUNTED LEFT OF CENTER TO ALLOW FULL ACCESS TO CONNECTIONS WHEN PANEL IS SWUNG OPEN
4.) ALL PERFORATIONS AND CLAMPS NEMA 4 RATED
5.) FIBERGLASS ENCLOSURES AND SWITCH BOX PENETRATIONS SEALED USING NEMA 4 RATED MYER'S HUB (3/4" FPT FOR JUNCTION WITH PIPE NIPPLES.

BRIDGETON LANDFILL, LLC 13570 ST. CHARLES ROCK ROAD BRIDGETON, MISSOURI 63044	2014 TEMPERATURE MONITORING PROBE INSTALLATION AS-BUILT DRAWINGS	Engineering for a Better World FEEZOR ENGINEERING, INC.	JANUARY 2015 DESIGNED BY: AMR APPROVED BY: ALK	DRAWING NO.:
TMP INSTALLATION - DETAILS				**005**
PROJECT NUMBER: BT-045 FILE PATH:			REVISION DATE	

APPENDIX E – SYSTEM PUMP SPECIFICATIONS

Rain for Rent

Model HH-80 Electric

Size 3” X 3”

Standard Features

- Hot Dip Galvanized Open Skids
- Fork Lift tubes
- Four corner bolt down angles
- Skid mounted with optional lifting bale
- Locking control panel
- Nu-T-Link compressor drive belt to allow easy belt replacement

Pump Features

- Solids handling capabilities to 1” diameter maximum
- Continuous self priming
- Runs dry unattended
- Suction lift to 28’ ft.
- Auto-start-capable control panel
- Stainless Steel, CD4MCu and Chrome pump Options

Technical

- Coupled to a 40hp 60Hz TEFC hostile duty dual voltage (230/460V) motor
- 460 volt control panel equipped with motor protection
- UL Type 3L Control panel designed for outdoor duty
- Panel equipped with Terminal Blocks for 2 remote float switches (Low off, High on)
- 480/240V-120V control transformer with protective fuses
- Compressor/Venturi automatic priming system

Material Specifications

- Standard Build – Ductile Iron volute, 316 Stainless Steel open impeller and replaceable wear plates
- Pump Shaft
  431 Stainless Steel
- Mechanical Seal
  Solid silicon carbide mating faces
  Oil-bath lubrication for dry running
- Suction / discharge flanges ANSI 150# FF.

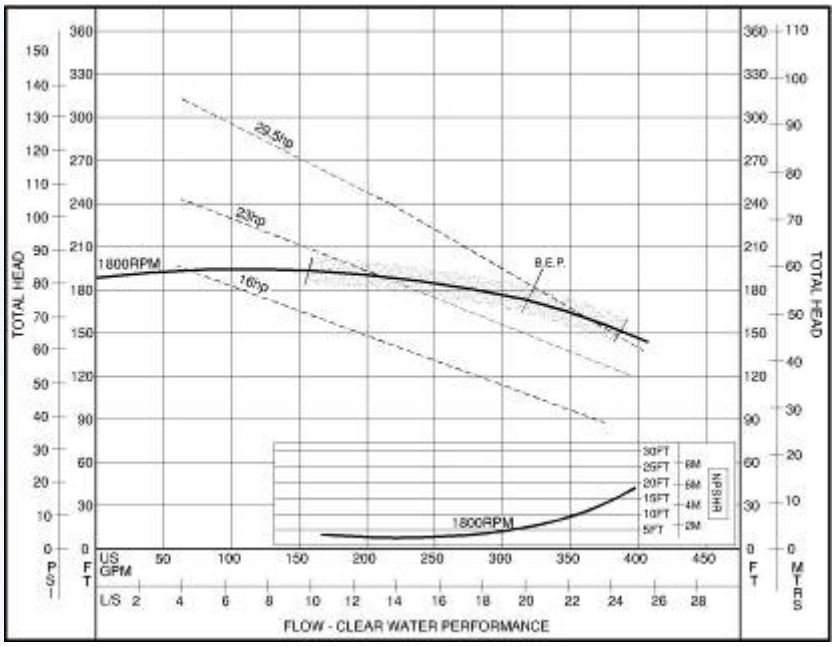

Rain for Rent
P.O. Box 2248
Bakersfield CA 93303
800-742-7246
661-393-1542
FAX 661-393-1542
www.rainforrent.com
info@rainforrent.com

Rain for Rent is a registered trademark of Western Oilfields Supply Company. Features and Specifications are subject to change without notice.

Rain for Rent

HH-80-E Technical Specifications

Production Curve

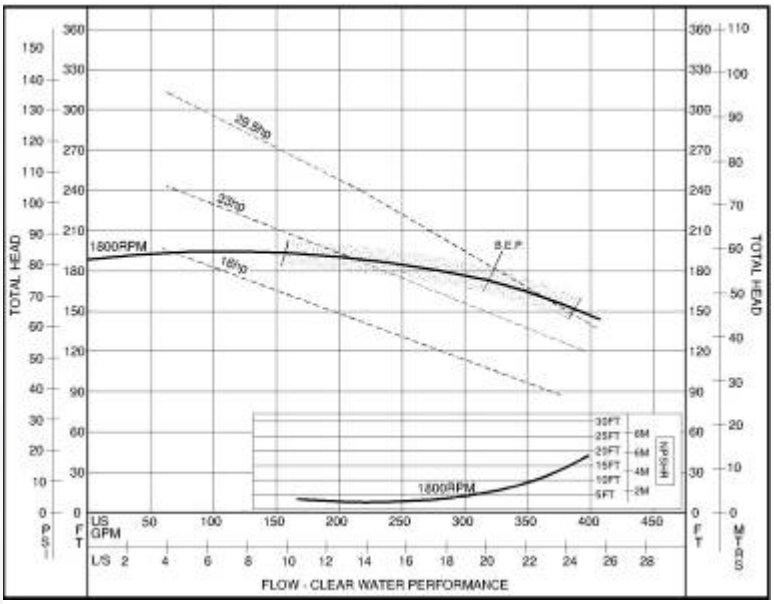

Performance Specs

STANDARD 3 VANE IMPELLER	
Maximum Operating Speed:	1760 rpm
Maximum Head:	180 ft.
Maximum Flow:	380 gpm

Design Details

Pump Designation:	HH-80
Pump Description:	Centrifugal end suction pump, single stage, volute type, 3 vane fully open impeller
Solid Handling Size:	1 inch (25mm)
Operating Temperature	MIN: -4ºF (-20ºC) MAX: +212ºF (+100ºC)

Dimensions

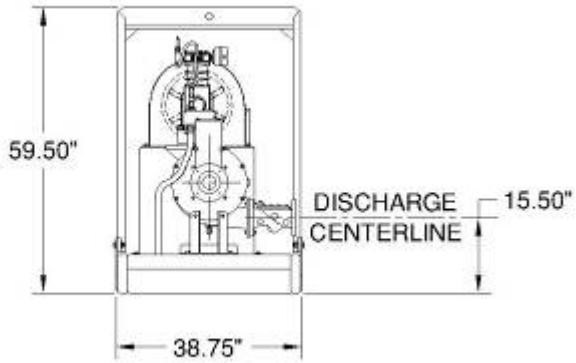

END VIEW

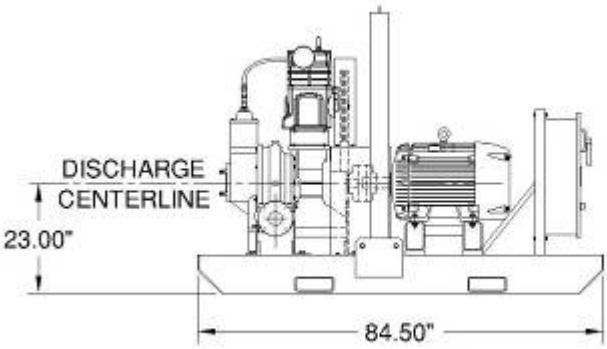

SIDE VIEW

Rain for Rent
P.O. Box 2248
Bakersfield CA 93303
800-742-7246
661-399-9124
FAX 661-393-1542
www.rainforrent.com
info@rainforrent.com

Rain for Rent is a registered trademark of Western Oilfields Supply Company. Features and Specifications are subject to change without notice.

Power Prime pumps

CURVE: 305008 4/05

PUMP: HH-80 ELECT.

SUCTION	DISCHARGE	MAX. SPHERE	IMPELLER	IMPELLER	IMPELLER & WEAR PLATES
75mm (3")	75mm (3")	25mm (1.0")	3 VANE	ø325mm (12.8")	316 S/S

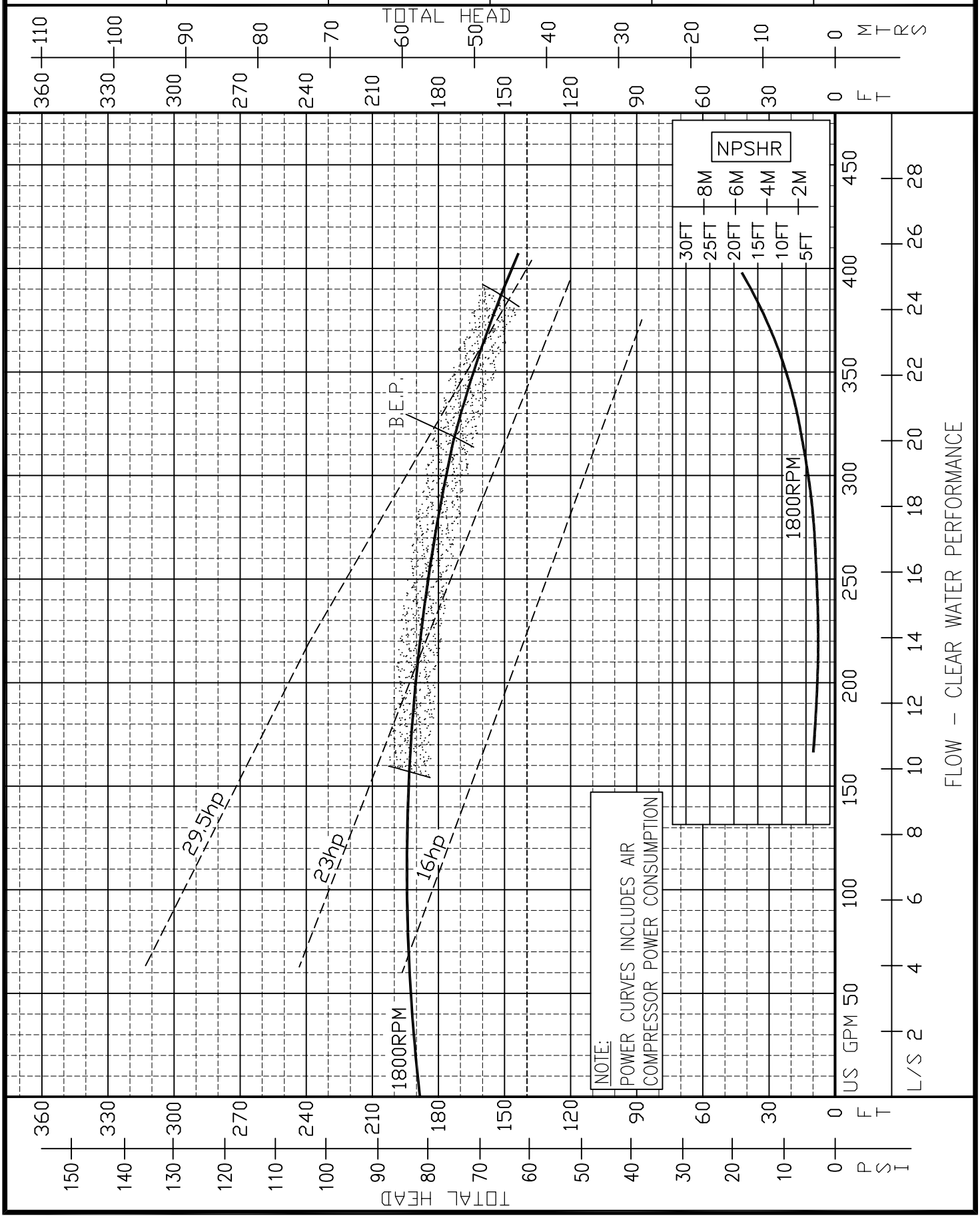

APPENDIX F – EQUILIZATION TANK SPECIFICATIONS

Steel Tank

Flat Top Corrugated Wall

Overview:

Store water for frac sites, groundwater remediation projects, or other temporary applications with this easy to clean 21,000 gallon flat top, smooth wall tank.

Features:

Store liquids with confidence with Rain for Rent's 21,000 gallon flat top tank. Permanently attached axels for maximum maneuverability allow this 21,000 gallon tank to be moved with ease on the jobsite and a safety staircase ensures proper protection for workers on site.

Specs:

Material	Steel
Capacity	21,000 gallons
Dry weight	26,000 lbs.
Footprint:	516" x 96" x 141"

Accessories:

- Spillguard
- Suction and discharge hoses
- Level gauges
- Steam coils

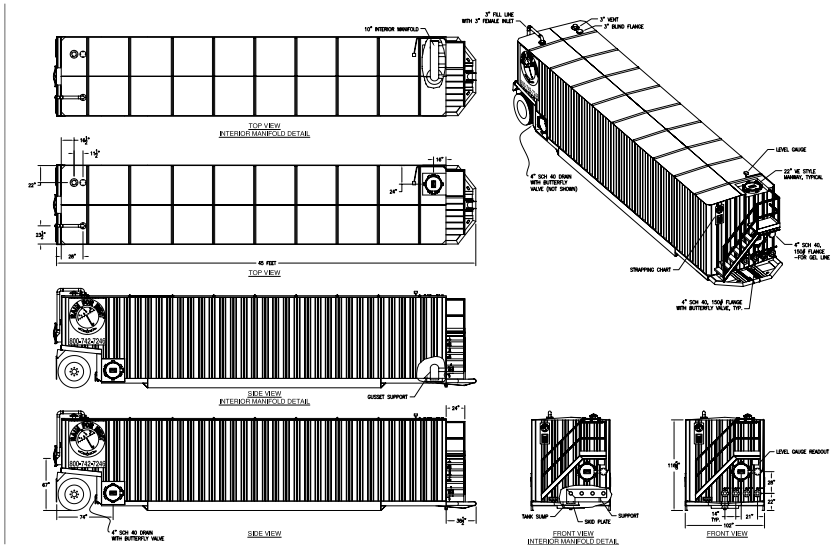

Liquid ingenuity.™

PUMPS • TANKS • FILTRATION • PIPE • SPILLGUARDS

800-742-7246
rainforrent.com

Rain for Rent is a registered trademark of Western Oilfields Supply Company. Features and specifications are subject to change without notice.

APPENDIX G – BAG FILTATION SYSTEM SPECIFICATIONS

BILL OF MATERIAL			
ITEM	AMT	DESCRIPTION	WT

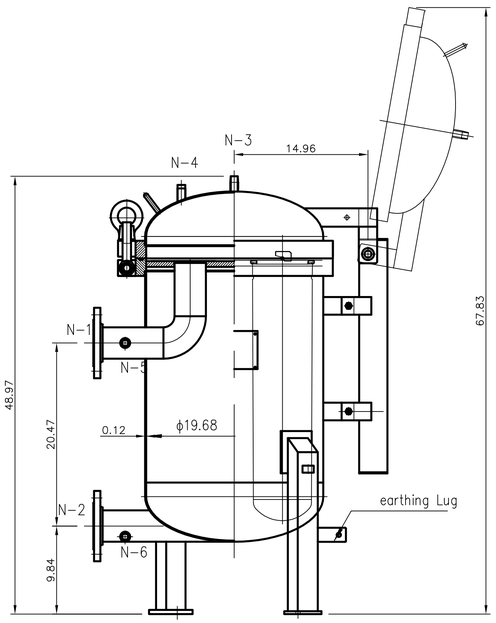

NOZZLE ORIENTATION

Tail dimensional drawing

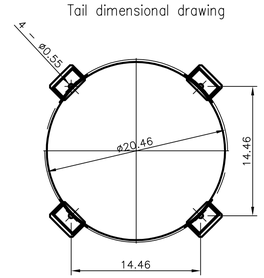

DESIGN DATA			
Design Pressure Mpa	1.0	Design Temperature □	80
Test Pressure Mpa	1.3		1.5
NO. Filter element	3	Volumem³	0.18
Shell Material	304	Empty Weight	165
Acid passivating & SS ball blasting			
Gasket/Material	BUNA□ EPDM□ FPM(VITON)□ SILICONE□		
Filter Element/Material	SS304□ SS316L□		

NOZZLE LIST				
Mark	Size	Service	Standard	Facing
N-1	3″	Inlet	ANSI B16.5 150Lb	RF
N-2	3″	Outlet	ANSI B16.5 150Lb	RF
N-3	1/2″	Vent	NPT 1/2″ (male)	
N-4	1/2″	Vent (Standby)	NPT 1/2″(female)	
N-5/ N-6	1 1/4″	Drain	NPT 1 1/4″ (male)	

Option B

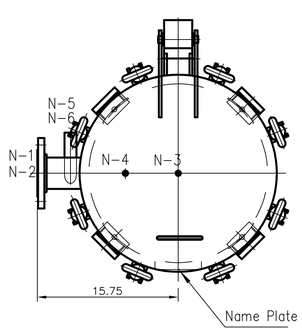

Option C

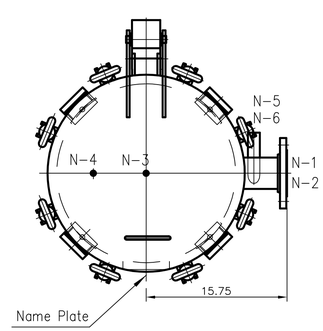

SYM	DESCRIPTION	DATE	BY	CHK

REVISIONS

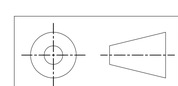

THIRD ANGLE PROJECTION

DO NOT SCALE DRAWING

TOLERANCE
UNLESS OTHERWISE SPECIFIED
INCHES
2 PLACES = ±.01
3 PLACES = ±.005
4 PLACES = ±.0005
FRACTIONS = ±1/16"

FILTRA•SYSTEMS
ISO 9001-2008
BETTER FILTRATION THROUGH BETTER TECHNOLOGY
23900 HAGGERTY ROAD – FARMINGTON HILLS, MICHIGAN 48335
www.filtrasystems.com

TITLE: 3-BAG FILTER

CONFIDENTIAL INFORMATION

THIS MATERIAL AND ALL INFORMATION THERIN ARE AND SHALL REMAIN THE PROPERTY OF FILTRA-SYSTEMS COMPANY; SHALL BE HELD CONFIDENTIAL; SHALL NOT BE REPRODUCED, COPIED OR OTHERWISE DISPOSED OF DIRECTLY OR INDIRECTLY; AND SHALL NOT BE USED IN WHOLE OR IN PART WITHOUT THE FULL KNOWLEDGE AND PRIOR WRITTEN CONSENT OF FILTRA-SYSTEMS COMPANY.

CUSTOMER:

DWG. TITLE: 3-BAG FILTER, SWING BOLT, OPTIONS "B" & "C"

DR. SET	DATE	DWG. NO.	JOB NO.
CHK. JH	SCALE		

APPENDIX H – NALCO TRACAR SYSTEM

3D TRASAR® Systems

Stress Management for Cooling Systems

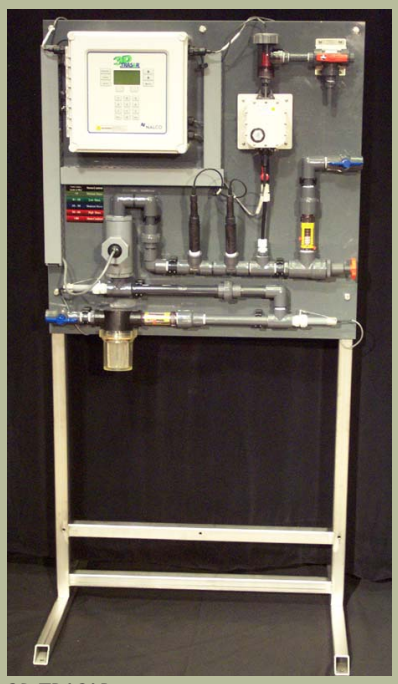

3D TRASAR

3D TRASAR Starter

The 3D TRASAR system is a complete water treatment control and monitoring system available in two configurations:

- 3D TRASAR
- 3D TRASAR *Starter*

3D TRASAR continuously measures key system parameters, detects upsets, takes appropriate corrective action and communicates with system users. 3D TRASAR minimizes total cost of operation (TCO) and prevents operational problems.

3D TRASAR *Starter* makes the elite 3D TRASAR technology more accessible. Customizable to meet specific user needs, 3D TRASAR *Starter* delivers TRASAR technology, conductivity control, web accessibility and new, easy reporting capabilities in one, easy to install package. 3D TRASAR *Starter* can be easily upgraded to full 3D TRASAR capability as needs and requirements change.

3D TRASAR Scale Control continuously monitors the scaling potential of your cooling water. By maximizing cycles of concentration, you save water and chemicals. Control action prevents system degradation.

3D TRASAR Corrosion Monitoring continuously monitors corrosion trends, alerting you and your Nalco Sales Engineer to any abnormal corrosion conditions.

3D TRASAR Bio-Control applies biocide based on the measured bio-activity in your cooling system. 3D TRASAR Bio-Control measures and controls both sessile and planktonic bio-activity, a capability unique to 3D TRASAR.

Table 1 – *3D TRASAR delivers complete Stress Management for Cooling Systems. Fully upgradeable and customizable, 3D TRASAR Starter makes this elite technology more accessible.*

	3D TRASAR *Starter*	3D TRASAR
3D TRASAR Fluorometer	X	X
Modem	X	X
Web Accessibility	X	X
Conductivity Measurement and Control	X	X
pH Measurement and Control		X
ORP Measurement and Control		X
Biocide Timers	X	X
Nalco Scale Control		X
Nalco Bio-Control		X
Nalco Corrosion Monitoring		X

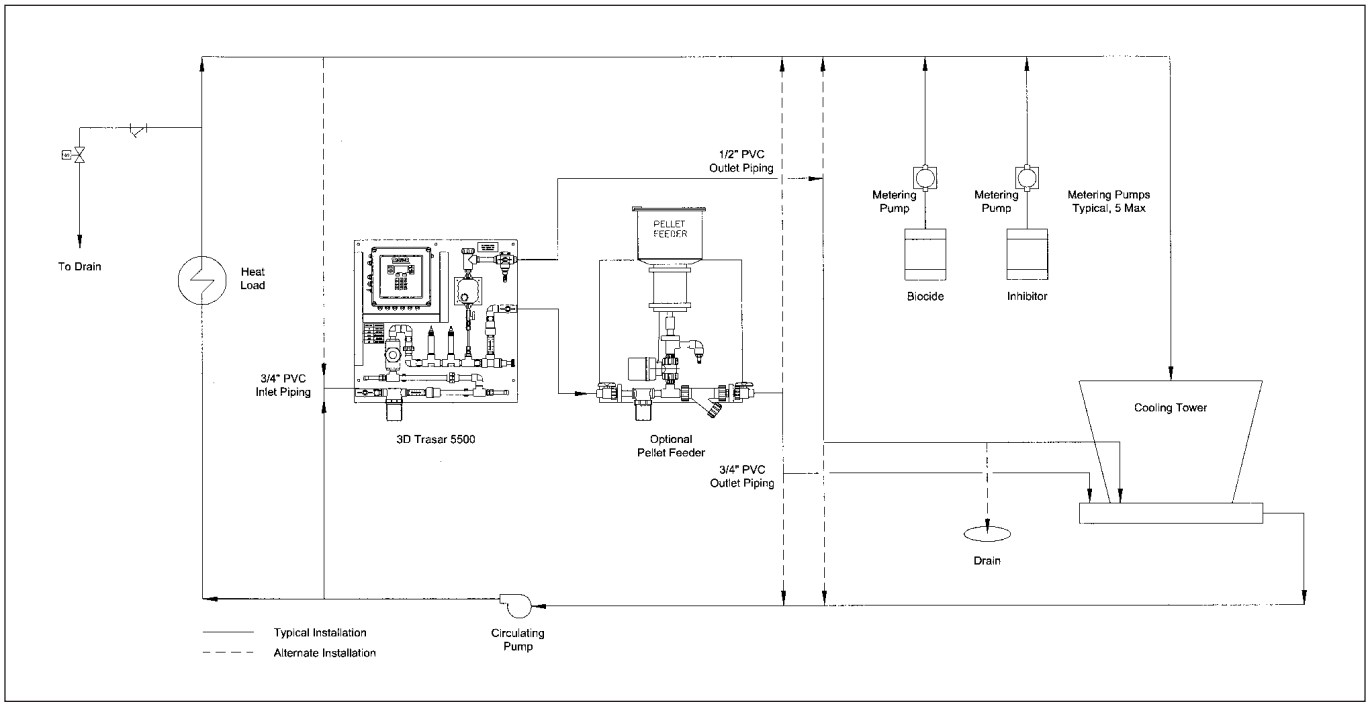

Typical Installation

Feed and Control Methods

Cycles of Concentration

- *3D TRASAR:* On/Off based on conductivity set-point or 3D TRASAR Scale Control.
- *3D TRASAR Starter:* On/Off based on conductivity set-point.
- Range: 200 – 10,000 microsiemens.
- Non-fouling, toroidal conductivity probe.

Chemical Feed – Inhibitor

- *3D TRASAR:* On/Off based on TRASAR, Tagged Polymer, 3D TRASAR Scale Control with manual, timer or slave options.
- *3D TRASAR Starter:* On/Off based on TRASAR with manual, timer or slave options.

Chemical Feed – Oxidizing Biocide

- *3D TRASAR:* On/Off based on ORP or 3D TRASAR Bio-Control with manual, timer or slug-based feed options. Includes pre-bleed and lockout capability.
- *3D TRASAR Starter:* Manual, timer or slug-based options. Includes pre-bleed and lockout capability.

Chemical Feed – Non-oxidizing Biocide

Timer or manual based feed with pre-bleed and lockout capability.

pH (3D TRASAR Only)

Acid or caustic on/off, based on flat surface, double junction 2-wire pH probe input, range 0-14 pH.

ORP (3D TRASAR Only)

Oxidizing biocide feed based on flat surface, double junction ORP probe input, range – 1000 to +1000 mv.

Multipurpose timers

Timer based feed on any available relay (no pre-bleed or lockout.)

Monitoring Functions

Corrosion Monitoring (3D TRASAR Only)

Continuous, on-line measurement of mild steel and copper.
Other metallurgies available.
Range: 0 to 99 mpy.

Additional Monitored Variables

- Cell Fouling (3D TRASAR Only)
- Turbidity
- Temperature
- Background Fluorescence (3D TRASAR Only)
- Relay Status
- Pulse counter with water meter

Additional Calculated Variables

- Holding Time Index (3D TRASAR Only)
- System Volume
- Blowdown Rate
- Heat Rejection (3D TRASAR Only)
- Makeup Water Rate
- Recirculation Rate
- Pump Duty
- Product Usage

Specifications

Plumbing Requirements

Control Panel 3/4" MNPT inlet, (2) outlets (1) 3/4" MNPT & (1) 1/2" MNPT. Total flow required 5 gpm. Outlet piping must be run separately.

Pellet Feeder 3/4" FNPT inlet, 3/4" FNPT outlet, 5 gpm required, 20 psig differential across both units.

Electrical

85 to 250 VAC @ 20 amps service

Sample requirements minimum Conductivity of 10 *u*S/cm required for Corrosion measurement.

Inputs

- (2) unassigned 4-20 mA unpowered non-isolated inputs (used for logging and alarm level call out.)
- (1) Flow input (contact closure)
- (1) Interlock input (contact closure)
- (2) Spare digital inputs (contact closure) used to log input states or low frequency water meter counts
- Modbus RS-232 or RS-485 (choose one) RTU SCADA port

Outputs

- (7) control relay outputs rated 2.5 amps each (larger loads require external motor starters)
- (8) 4-20 mA powered non-isolated outputs

Alarms

- (1) Alarm output relay (rated 1.0 amp max unpowered)
- E-mail notification of alarm conditions (via modem to ISP or customer's LAN-based mail server.)

Enclosure

Nema 4X

Ambient temperature

40-120°F (4-50°C)

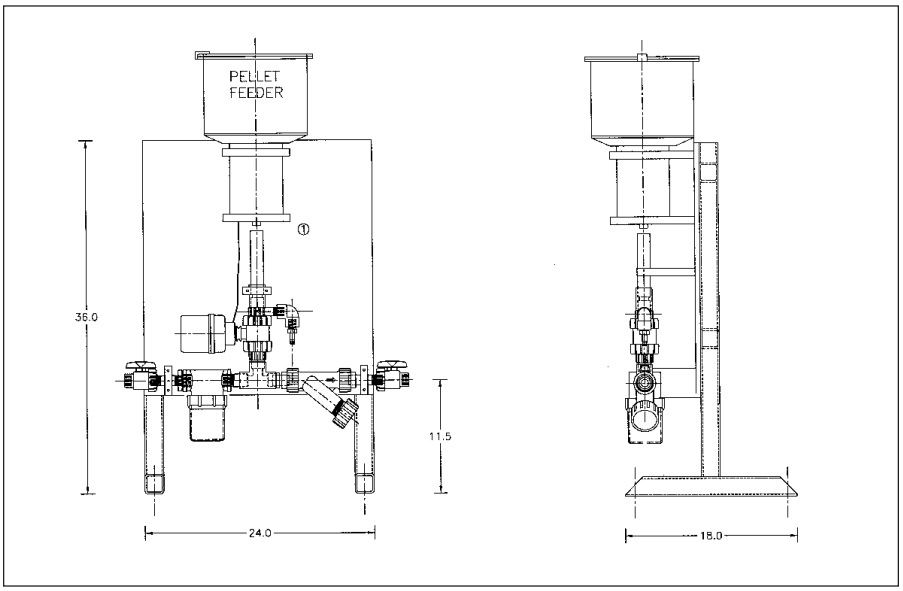

Pellet Feeder

Process water temperature

40-120°F (4-50°C)

Relative Humidity

0-95% non-condensing

Maximum water pressure

90 psi

Display/Keypad

Numeric keypad plus specialty keys, graphical display with plotting functions

Security

Password protected (user assignable)

Data management

All variables are data logged in spread-sheet format

Communications

- Ethernet port for direct PC connection
- Built-in modem for direct remote connection or access to 3D TRASAR Web via Internet (requires ISP)
- Optional wireless gateway with monthly service package.

Approvals

UL, CUL, CE

Software

- 3D TRASAR Configurator for system configuration and data transfer
- Optional Vantage® 100 SPC software for comprehensive data management and analysis.

Support

If you have any questions, please contact your local Nalco Sales Engineer. In North America, you can also contact the Equipment Solutions Technical Support Group at 1-800-323-8483.

Replacement Parts and Accessories

Part Number	Description
3D TRASAR (NA)	
060-TR5500.88	Wall Mount, small backboard
060-TR5501.88	Frame Mount, small backboard
060-TR5510.88	Wall Mount with Junction Box
060-TR5511.88	Frame Mount with Junction Box
060-TR5520.88	Enclosed Wall Mount with Junction Box
060-TR5521.88	Enclosed Frame Mount with Junction Box
060-TR5522.88	Enclosed Wall, Junction Box, Gateway
060-TR5523.88	Enclosed Frame, Junction Box, Gateway
060-TR5530.88	Air Purged Wall Mount with Junction Box
060-TR5531.88	Air Purged Frame Mount with Junction Box
060-TR5532.88	Air Wall, Junction Box, Gateway
060-TR5533.88	Air Frame, Junction Box, Gateway
3D TRASAR *Starter* (NA)	
060-TR3500.88	Wall Mount, small backboard
060-TR3501.88	Frame Mount, small backboard
060-TR3510.88	Wall Mount with Junction Box
060-TR3511.88	Frame Mount with Junction Box
060-TR3520.88	Enclosed Wall Mount with Junction Box
060-TR3521.88	Enclosed Frame Mount with Junction Box
060-TR5522.88	Enclosed Wall, Junction Box, Gateway
060-TR5523.88	Enclosed Frame, Junction Box, Gateway
060-TR3530.88	Air Purged Wall Mount with Junction Box
060-TR3531.88	Air Purged Frame Mount with Junction Box
060-TR5532.88	Air Wall, Junction Box, Gateway
060-TR5533.88	Air Frame, Junction Box, Gateway
3D TRASAR Bio-Reporter Feed Options	
060-TR5120.88	Bio-Reporter, Pellet Feeder Assembly for system sizes greater than 12,000 gallons
141-PJ4035.88	Bio-Reporter, Liquid Feed pump, for system sizes 3,000 to 12,000 gallons
6008505	Bio-Reporter, Liquid Feed pump, for system sizes up to 3,000 gallons
460-3DTBRC.87	Bio-reporter Quick Dose Pouch (pretreats approx. 150,000 gallons)
Probes	
060-TR5411.88	pH Probe, flat surface, 3/4" NPT
060-TR5421.88	ORP Probe, flat surface, 3/4" NPT
060-TR5441.88	Conductivity Probe, torroidal probe and tee, (fits 2" Union)
400-NCMP1B.88	Corrosion Probe w/ferrule, Mild Steel
400-NCMP2B.88	Corrosion Probe w/ferrule, Copper
400-NCMP4B.88	Corrosion Probe w/ferrule, CuNi 90/10
400-NCMP5B.88	Corrosion Probe w/ferrule, CuNi 70/30
400-NCMP7B.88	Corrosion Probe w/ferrule, 443 Admiralty Brass
Spares	
991-50554318.88	Fuse, 2.5 A, 250V, (output relay fuse)
060-TR5222.88	Desiccant Canister (Fluorometer)
060-TR5223.88	Desiccant Indicator (Fluorometer)
500-P2818.88	Pellet Feeder Cleaning Brush
060-TR5313.88	Pellet Feeder Shield (Dam Repair Kit)
400-NCMAC5.88	Corrosion Probe Swagelock Fitting, Nylon 3/4"
400-NCMAC15.88	Corrosion Probe Restraint Device
6000668	Replacement Flowswitch
TK-135	Configurator Software CD

Reagents and Calibration Supplies

500-TSRKIT.88 TRASAR 5000 Series Start-up Kit

Start up Kit includes: TRASAR 5000 Calibration Solution 1L (2,) pH 7.0 and 10.0 Calibration solutions 1L (1 of each,) ORP 200 mv and 600 mv Calibration Solutions 1L (1 of each,) Fluorometer Cleaning Solution 1L, Replacement Mild Steel and Copper NCM probes (1 of each,) Fluorometer Probe Brush, 800 mL Plastic Beakers (3,) 60 cc Plastic Syringes (3.)

Maintenance Value Package

060-TRMNKIT.88 TRASAR 5000 Series Maintenance Value Pkg

Maintenance Value Package includes: TRASAR 5000 Calibration Solution 1L (2,) pH 7.0 and 10.0 Calibration solutions 1L (1 of each,) ORP 200 mv and 600 mv Calibration Solutions 1L (1 of each,) Fluorometer Cleaning Solution 1L, Replacement Mild Steel and Copper NCM probes (2 of each,) Fluorometer Probe Brush, 800 mL Plastic Beakers (3,) 60 cc Plastic Syringes (3,) Replacement pH Probe (1,) Replacement ORP Probe (1,) Fluorometer Dessicant Canister, Fluorometer Dessicant Indicator.

460-S0940.75	TRASAR 5000 Series Calibration Solution, 1L
460-S0408.75	pH Calibration Solution, pH 10.0, 1L
460-S0407.75	pH Calibration Solution, pH 7.0, 1L
460-S0932A.75	ORP Calibration Solution, 200 mv, 1L
460-S0933A.75	ORP Calibration Solution, 600 mv, 1L
460-S0298.75	Conductivity Calibration Solution, 600 uS, 1L
460-S0297.75	Conductivity Calibration Solution, 3000 uS, 1L
460-S0800.75	Fluorometer Cleaning Solution, 1L
500-P2817.88	Flow Cell Brush
500-P0116.88	Beaker, 500 mL, plastic
500-P2147.88	Syringe, 60 cc, w/female luer lock, plastic

Cables

060-TR5221.88	Fluorometer Cable, 4 ft.
060-TR5311.88	Pellet Feeder Cable, 25 ft.
060-TR5412.88	pH Cable
060-TR5422.88	ORP Cable
991-01928722.88	Service Cord, 12/3 SJOW (no termination)
991-05053481.88	Pigtail, 16/3 SJOW, 18" w/ US plug
991-05047661.88	Ethernet Crossover cable, 6' orange

Optional Accessories

060-TR5270.88	LAN Router
060-TR5280.88	Wireless Gateway
060-TR5282.88	Optional Antenna for Wireless Gateway
160VTG100	Vantage V100
060-TR5350.88	Bio-Reporter Liquid Overflow Container
060-TR5280R.88	Wireless Service 1 yr Update

NALCO COMPANY OPERATIONS

North America: ***Headquarters*** **–** 1601 West Diehl Road • Naperville, Illinois 60563 • USA
Energy Services Division **–** 7705 Highway 90-A • Sugar Land, Texas 77487 • USA
Europe: Ir.G.Tjalmaweg 1 • 2342 BV Oegstgeest • The Netherlands
Asia Pacific: 2 International Business Park • #02-20 The Strategy Tower 2 • Singapore 609930
Latin America: Av. das Nações Unidas 17.891 • 6° Andar 04795-100 • São Paulo • SP • Brazil

www.nalco.com

TRASAR, 3D TRASAR, Vantage, NALCO and the logo are Registered Trademarks of Nalco Company
©2004, 2006 Nalco Company All Rights Reserved 12-06

APPENDIX I – BLOW-DOWN CONTROL VALVE

MFT 5 YEAR WARRANTY

Model

LRX24-MFT

Technical Data

Power supply	24 VAC ± 20% 50/60 Hz 24 VDC ± 10%
Power consumption running	2 W
holding	1.2 W
Transformer sizing	5 VA (class 2 power source)
Electrical connection	18 GA plenum rated cable 1/2" conduit connector ❑ 3 ft [1m] ❑ 10 ft [3m] ❑ 16 ft [5m]
Overload protection	electronic throughout 0° to 95° rotation
Operating range Y	2 to 10 VDC, 4 to 20 mA (default) Variable (VDC, PWM, Floating Point, On/Off)
Input impedance	100 kΩ (0.1 mA), 500 Ω 1500 Ω (PWM, Floating Point, On/Off)
Feedback output U	2 to 10 VDC, 0.5mA max VDC Variable
Angle of rotation	max. 95°, adjust. with mechanical stop electronically variable
Torque	45 in-lb [5 Nm]
Direction of rotation	reversible with protected ↷/↶ switch
Position indication	handle
Manual override	external push button
Running time	100 seconds Variable (35 to 150 secs)
Humidity	5 to 95% RH non condensing (EN 60730-1)
Ambient temperature	-22°F to 122°F [-30°C to 50°C]
Storage temperature	-40°F to 176°F [-40°C to 80°C]
Housing	NEMA 2/IP54
Housing material	UL94-5VA
Agency listings†	cULus acc. to UL60730-1A/-2-14, CAN/CSA E60730-1, CSA C22.2 No. 24-93, CE acc. to 89/336/EEC
Noise level	<35dB(A)
Quality standard	ISO 9001
Weight	1.5 lbs [0.7 kg]

† Rated impulse voltage 800V, Control pollution degree 3,
Type of action 1 (1.B for -S models)

Dimensions with PICCV

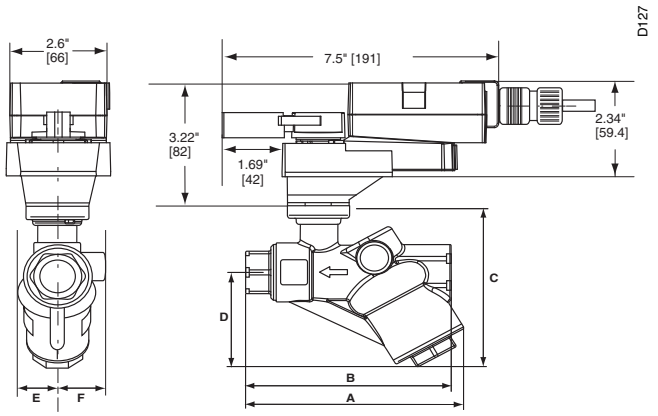

Valve Nominal Size		Dimensions (Inches [mm])					
In.	DN [mm]	A	B	C	D	E	F
½"	15	4.68 [119]	4.47 [114]	4.05 [103]	2.34 [60]	0.99 [25]	0.99 [25]
¾" after 8/2009	20	4.90 [125]	4.94 [126]	4.05 [103]	2.34 [60]	0.99 [25]	0.99 [25]
¾" until 8/2009	20	5.35 [133]	5.03 [128]	4.22[107]	2.38 [61]	1.04 [26]	1.30 [34]
1"	25	7.05 [179]	6.85 [174]	4.80 [122]	3.23 [82]	1.60 [41]	1.60 [41]

L30037 - 05/09 - Subject to change. © Belimo Aircontrols (USA), Inc.

Wiring Diagrams

INSTALLATION NOTES

2 **CAUTION** *Equipment damage!*
Actuators may be connected in parallel.
Power consumption and input impedance must be observed.

3 Actuators may also be powered by 24 VDC.

4 Position feedback cannot be used with Triac sink controller.
The actuator internal common reference is not compatible.

6 Control signal may be pulsed from either the Hot (source) or the Common (sink) 24 VAC line.

8 Contact closures A & B also can be triacs.
A& B should both be closed for triac source and open for triac sink.

9 For triac sink the common connection from the actuator must be connected to the hot connection.

APPLICATION NOTES

- The ZG-R01 500 Ω resistor converts the 4 to 20 mA control signal to 2 to 10 VDC, up to 2 actuators may be connected in parallel.

WARNING *Live Electrical Components!*
During installation, testing, servicing and troubleshooting of this product, it may be necessary to work with live electrical components. Have a qualified licensed electrician or other individual who has been properly trained in handling live electrical components perform these tasks. Failure to follow all electrical safety precautions when exposed to live electrical components could result in death or serious injury.

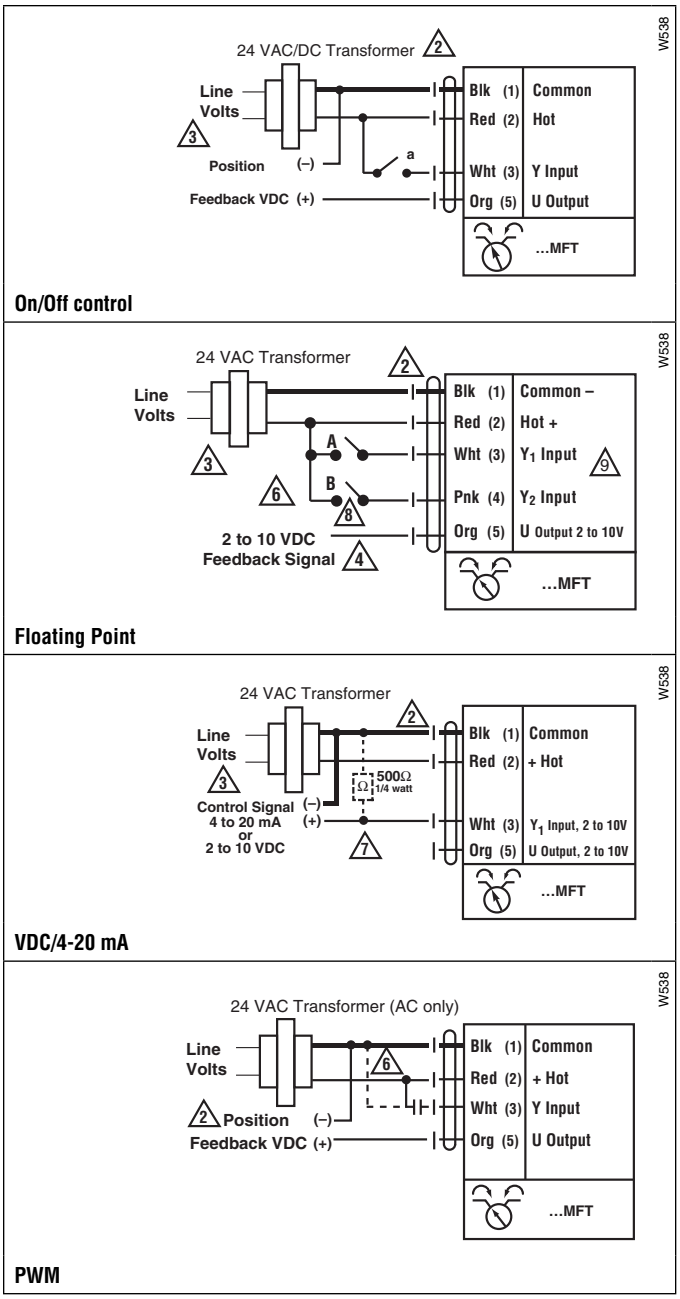

L30037 - 05/09 - Subject to change. © Belimo Aircontrols (USA), Inc.

APPENDIX J – DATA COLLECTION DEVICES

APPENDIX J – DATA COLLECTION DEVICES

HEAT EXTRACTION POINT FLOW METER

Great Plains Industries, Inc.
5252 E. 36th St. N.
Wichita, KS 67220
Tel: 888-996-3837
Fax: 316-686-6746
Email: meters@gplains.com

Item # G2B10N09GMA, 1 in. Brass Flowmeter

This Brass 1 in. flowmeter comes with NPT fittings, the 09 Computer, and is calibrated to read gallons per minute (GPM).

Ready to Buy? Find a GPI Distributor in your area!

Specifications

Design Type	Turbine
Inner Diameter	1 Inch
Fitting	NPT 1 in.
Accuracy	±1.0 % of reading with Computer ±1.5 % of reading without Computer
Flow Range	5 to 50 GPM 18.9 to 190 LPM
Repeatability	±0.1 %
Operating Temperature	0 to +140 ºF -18 to +60 ºC -40 to +250 ºF without Computer -40 to +121 ºC without Computer
Frequency	47 to 470 Hz at 5 to 50 GPM
Recommended Strainer Size	55 mesh
Display	LCD - 09 Computer
Reads	Gallons Litres
Electronic Choice	09 - 2 Totals (Resettable/Cumulative), Factory Calibration in Gallons and Litres, 2 User Calibrations and Flowrate
Pressure Rating	300 PSI 21 bar
Wetted Materials	Brass Housing Ceramic Bearings 316 Stainless Steel Rings PVDF Rotor Tungsten Carbide Shaft
Typical K-Factor	565
Wrench Flat Size	1 5/8 Inch 41 mm
Approvals	ATEX II 1 G Ex ia IIC T6 Ta = -40°C to 60°C; IP65 CE EEx nL IIC T4 U Factory Mutual Approved

APPENDIX J – DATA COLLECTION DEVICES

DIGITAL MULTIMETER

©2000 Fluke Corporation
Rev. A-11/2000

FLUKE®

Fluke 170 Series True-rms Digital Multimeter
Extended Specifications

Model Differences
(all other specifications are the same for each model)

Feature	Model		
	175	177	179
Backlight		•	•
Temperature Measurement			•
Basic dc voltage accuracy	0.15%	0.09%	0.09%

Nominal Specifications

Function	Absolute Range or Description	
AC Voltage, True-rms	0.1 mV to 1000V (1 kHz)	
DC Voltage	0.1 mV to 1000V	
Continuity	Beeper guaranteed on < 25 Ω, guaranteed off > 250 Ω; detects opens or shorts of 250 µs or longer.	
Resistance	0.1Ω to 50.00 MΩ	
Diode Test	2.400V	
Capacitance	1 nF to 9999 uF	
AC Current, True-rms	0.01 mA to 10.00A (20.00 A over-range for 30 seconds)	
DC Current	0.01 mA to 10.00A (20.00 A over-range for 30 seconds)	
Frequency	2 Hz to 50 kHz	
Temperature (179 Only)	-40 °C to +400 °C; -40 °F to +752 °F	
Basic dc voltage accuracy	0.15% (175)	0.09% (177 & 179)
Basic ac voltage accuracy	1.0%	

Features

Feature	Description
Digital Display	6000 counts, updates 4 x second
Analog Bargraph Display	33 segments, updates 40 x second
Backlight (177 & 179 only)	Automatically turns off after 2 minutes to save battery life The timeout feature can be disabled with a power-up option
HOLD & Auto HOLD	HOLD: freezes the display at the push of a button Auto HOLD: Display holds present reading until it detects new stable input, then the meter beeps and displays new reading
MIN MAX AVG	Minimum, maximum, and average reading memory
Manual or auto ranging	In auto range, the meter selects the range with the best resolution for the present measurement value
Fast continuity/open detection	The beeper sounds with a stretched pulse for opens or shorts as brief as 250 µs
Test lead alert	The message "LEAd" appears briefly on the display when the rotary switch is moved to or from any **A** (Amps) position
Power-up options	(1) Turn on all LCD segments, (2) Disable beeper, (3) Disable sleep mode, (4) Enable smoothing, (5) Disable backlight timeout (Models 177 & 179 only)
Closed-case calibration	No internal adjustments needed
Probe holders	The instrument comes with built-in probe holders for probe storage and for convenience when making measurements
Battery access door	Battery replacement without voiding calibration
High-impact overmold case	Integrated overmolded protection provides superior impact protection for your meter

©2000 Fluke Corporation

FLUKE ®

General Specifications

Accuracy is specified for 1 year after calibration, at operating temperatures of 18 °C to 28 °C, with relative humidity of 0 % to 75 %. Accuracy specifications take the form of: ± ([% of Reading] + [Counts])	
Maximum voltage between any terminal and earth ground	1000V DC or AC RMS
Surge Protection	8 kV peak per IEC 61010
Fuse for mA inputs	440 mA, 1000 V FAST Fuse
Fuse for A input	11A, 1000V FAST Fuse
Display	Digital: 6,000 counts, updates 4/sec Bar Graph: 33 segments, updates 40/sec Frequency: 9,999 counts Capacitance: 9,999 counts
Altitude	Operating: 2000 m; Storage: 12000 m
Temperature	Operating: -10 °C to +50 °C Storage: -30 °C to +60 °C
Temperature coefficient	0.1 X (specified accuracy / °C) (< 18 °C or > 28 °C)
Electromagnetic Compatibility (EN 61326-1:1997)	In an RF field of 3 V/M, accuracy = specified accuracy except in temperature: specified accuracy ± 5 °C, ± 9 °F
Relative Humidity	0 % to 90 % @ 0 °C to 35 °C; 0 % to 70 % @ 36 °C to 50 °C
Relative Humidity in 50 MΩ Range	0 % to 80 % @ 0°C to 35°C; 0 % to 70 % @ 36 °C to 50 °C
Battery Life	Alkaline: ~200 hrs typical
Size, with Holster (H x W x L)	4.3 cm x 9 cm x 18.5 cm
Weight	420g
Safety Compliances	ANSI/ISA S82.02.01, CSA C22.2-1010.1, IEC 61010 to 1000 V Overvoltage Category III, 600 V Overvoltage Category IV
Certifications	CSA, TÜV (EN61010), Australian ✓ (N10140)

FLUKE ®

Detailed Specifications

Function	Range [1]	Resolution	Accuracy ± ([% of Reading] + [Counts]) Model 175	Model 177	Model 179
AC Volts [2]	600.0 mV 6.000V 60.00V 600.0V 1000V	0.1 mV 0.001V 0.01V 0.1V 1V	1.0 % + 3 (45 Hz to 500 Hz) 2.0 % + 3 (500 Hz to 1 kHz)	1.0 % + 3 (45 Hz to 500 Hz) 2.0 % + 3 (500 Hz to 1 kHz)	1.0 % + 3 (45 Hz to 500 Hz) 2.0 % + 3 (500 Hz to 1 kHz)
DC mV	600.0 mV	0.1 mV	0.15 % + 2	0.09 % + 2	0.09 % + 2
DC Volts	6.000V 60.00V 600.0V	0.001V 0.01V 0.01V	0.15 % + 2	0.09 % + 2	0.09 % + 2
	1000V	1V	0.15 % + 2	0.1 % + 2	0.1 % + 2
Continuity	600Ω	1Ω	Meter beeps at < 25 Ω, beeper turns off at > 250 Ω; detects opens or shorts of 250 ms or longer.		
Ohms	600.0Ω 6.000 kΩ 60.00 kΩ 600.0 kΩ 6.000 MΩ 50.00 MΩ	0.1Ω 0.001 kΩ 0.01 kΩ 0.1 kΩ 0.001 MΩ 0.01 MΩ	0.9 % + 2 0.9 % + 1 0.9 % + 1 0.9 % + 1 0.9 % + 1 1.5 % + 3	0.9 % + 2 0.9 % + 1 0.9 % + 1 0.9 % + 1 0.9 % + 1 1.5 % + 3	0.9 % + 2 0.9 % + 1 0.9 % + 1 0.9 % + 1 0.9 % + 1 1.5 % + 3
Diode test	2.400V	0.001V	1 % + 2		
Capacitance	1000 nF 10.00 µF 100.0 µF 9999 µF [3]	1 nF 0.01 µF 0.1 µF 1 µF	1.2 % + 2 1.2 % + 2 1.2 % + 2 10 % typical	1.2 % + 2 1.2 % + 2 1.2 % + 2 10 % typical	1.2 % + 2 1.2 % + 2 1.2 % + 2 10 % typical
AC Amps (True-rms) (45 Hz to 1 kHz)	60.00 mA 400.0 mA (600 mA for 18 hrs) 6.000A 10.00A (20A for 30s)	0.01 mA 0.1 mA 0.001A 0.01A	1.5 % + 3	1.5 % + 3	1.5 % + 3
DC Amps	60.00 mA 400.0 mA (600 mA for 18 hrs) 6.000A 10.00A (20A for 30s)	0.01 mA 0.1 mA 0.001A 0.01A	1.0 % + 3	1.0 % + 3	1.0 % + 3
Hz (AC- or DC-coupled, V or A [4,5] input)	99.99 Hz 999.9 Hz 9.999 kHz 99.99 kHz	0.01 Hz 0.1 Hz 0.001 kHz 0.01 kHz	0.1 % + 1	0.1 % + 1	0.1 % + 1
Temperature	-40 °C to +400 °C -40 °F to +752 °F	0.1 °C 0.1 °F	NA	NA	1 % + 1.0 °C 1 % + 1.8 °F
MIN MAX AVG	For DC functions, accuracy is the specified of the measurement function ± 12 counts for changes longer than 275 ms in duration. For AC functions, accuracy is the specified of the measurement function ± 40 counts for changes longer than 1.2 s in duration.				

1. All AC voltage and AC current ranges are specified from 5 % of range to 100 % of range.
2. Crest factor of ≤ 3 at full scale up to 500 V, decreasing linearly to crest factor ≤ 1.5 at 1000 V.
3. In the 9999 µF range for measurements to 1000 µF, the measurement accuracy is 1.2 % for all models.
4. In mA and A ranges, frequency measurement is specified to 30 kHz.
5. Frequency < 10 kHz are not specified in 600 mV AC, 60 mA AC, and 6 A AC ranges.

Function	Overload Protection [1]	Input Impedance (Nominal)	Common Mode Rejection Ratio (1 kΩ Unbalanced)		Normal Mode Rejection
Volts AC	1000 V RMS or DC	> 10 MΩ < 100 pF	> 60 dB @ DC, 50 or 60 Hz		
Volts DC	1000 V RMS or DC	> 10 MΩ <100 pF	>120 dB @ DC, 50 or 60 Hz		> 60 dB @ 50 Hz or 60 Hz
		Open Circuit Test Voltage	**Full Scale Voltage To: 6.0 MΩ**	**50 MΩ**	**Short Circuit Current**
Ohms	1000V RMS or DC	< 1.5 V DC	< 600 mV DC	< 1.5 V DC	< 500 µA
Diode test	1000V RMS or DC	2.4 to 3.0 V DC	2.4 V DC		< 1.2 mA typical

1. 10^7 V-Hz maximum.

Fluke. *Keeping your world up and running.*

Fluke Corporation
PO Box 9090, Everett, WA USA 98206

Fluke Europe B.V.
PO Box 1186, 5602 BD
Eindhoven, The Netherlands

For more information call:
U.S.A. (800) 443-5853 or
Fax (425) 446-5116
Europe (31 40) 2 675 200 or
Fax (31 40) 2 675 222
Canada (905) 890-7600 or
Fax (905) 890-6866
Other countries (425) 446-5500 or
Fax (425) 446-5116
Web access: http://www.fluke.com

©2001 Fluke Corporation. All rights reserved.
Specifications subject to change without notice.
Printed in U.S.A. 3/2001

Printed on recycled paper.

APPENDIX J – DATA COLLECTION DEVICES

MAIN SYSTEM FLOW METER

Great Plains Industries, Inc.
5252 E. 36th St. N.
Wichita, KS 67220
Tel: 888-996-3837
Fax: 316-686-6746
Email: meters@gplains.com

Item # TM300-D, 3 in. TM Series Water Meter

3 in. PVC water meter with NPT fittings and local electronic LCD computer that reads Gallons, Litres and Cubic Feet. Use with water and mild chemicals.

Ready to Buy? Find a GPI Distributor in your area!

Specifications

Inner Diameter	3 in.
Design Type	Turbine
Fitting	DIN Flange 3 in.
Accuracy	±3.0 % of reading
Flow Range	40 to 400 GPM 151 to 1514 LPM
Operating Temperature	+32 to +140 ºF 0 to +60 ºC
Powered By	5 Year Lithium battery
Display	LCD 6 Digits
Reads	Litres
Electronic Choice	09 Computer (Local) Rate of Flow, Field Calibration, Batch, and Cumulative Total options
Pressure Rating	150 PSIG 10 bar at 23º C / 73º F
Output	Open Collector (NPN) Pulse
Wetted Materials	PVC Housing PEEK Bearings Stainless Steel Shaft Acetal Rotor Stainless Steel Thrust Washers
Typical K-Factor	43
Model	TM300-D
To Use With	OEM Water Treatment Equipment / Skids Sub-Metering of Facility Water Usage Waste Water Treatment Equipment Water Based Cooling Systems
Approvals	CE

APPENDIX J – DATA COLLECTION DEVICES

RTD THERMOMETERS

Wireless and High Accuracy RTD Thermometers

HH804 Series

1 YEAR WARRANTY · NIST

Standard
No Points

Wireless Model Available! Monitors Up to 10 Different Meters With 1 Receiver

Order a spare DIN connector, HH804-CONNECTOR

HH804U dual RTD input.

- Wireless Model HH804W
- 100 Ω Platinum
- 0.00385/0.003916/ 0.003926 Curves
- 3- or 4-Wire RTD
- High ±0.05% +0.2°C Reading Accuracy
- Includes NIST-Traceable Calibration Certificate (No Points)
- MAX/MIN/AVG/REL/HOLD
- Elapsed Time
- High/Low Limits Alarm (Audible)
- Dual Temperature Display
- Supplied with 4 Pin Mini DIN Plug (One per Channel)
- Optional Windows® Software
- Optional AC Adaptor (USB Models Only)

The HH804U is a high accuracy RTD input thermometer. HH804U works with 100 Ω platinum RTDs and is selectable for 3 different temperature coefficient curves. HH804U complies with ITS-90 and comes standard with a built in USB port and DC power jack. Optional Windows software and AC adaptor allow real time data logging to PC for extended periods. The HH804W features a quick and easy to use wireless interface instead of USB. This allows real time data transmission at distances of up to 25 m (75'). HH804 is a basic version, without wireless or USB interface.

Specifications

Measurement Range:
0.00385 (100 Ω):
-200.0 to 800.0°C
(-328.0 to 1472.0°F)
0.003916/0.003926 (100 Ω):
-200.0 to 630.0°C
(-328.0 to 1166.0°F)

Accuracy: Stated accuracy at 23°C
±0.05%, <75% RH
±(0.05% rdg + 0.2°C)
±(0.05% rdg + 0.4°F)

Input Connections: 4-pin mini on DIN

Measurement Rate: 1 times/second

Operating Environment: 0 to 50°C at <70% RH

OMEGACARE℠ Extended Warranty Program

OMEGACARE℠ extended warranty program is available for models shown on this page. Ask your sales representative for full details when placing an order. OMEGACARE℠ covers parts, labor and equivalent loaners.

To Order ***Visit omega.com/hh804_805 for Pricing and Details***

Model No.	HH804U	HH804W (Wireless)	HH804
Units	°C/°F	°C/°F	°C/°F
Display Elapsed Time	Dual 4½ digit + Elapsed Time	Dual 4½ digit + Elapsed Time	Dual 4½ digit + Elapsed Time
Input types	Pt100 RTD	Pt100 RTD	Pt100 RTD
No. of Inputs	2	2	2
Wireless	No	Yes	No
USB Port	Yes	No	No
DC Power Jack	Yes	No	No
Resolution		0.1°/0.2°F	

Note: *All wireless units are USA, 900 Mhz frequency band versions. For European 868.0 Mhz~868.6 Mhz frequency band versions, add suffix **"E"**, no additional charge.*

Comes complete with HH804-CONNECTOR (one per channel), protective rubber boot, NIST certificate (no points), 4 "AAA" batteries, and operator's manual.

Ordering Examples: HH804U, *high accuracy RTD input thermometer and **HH800-SW**, Windows software and USB cable, **OCW-3** OMEGACARE℠ extends standard 1-year warranty to a total of 4 years.*

Accessories

Model No.	Description
HH800-ADAPTOR	AC adaptor (USB models only)
SC-800	Soft case with belt loop for HH800 series, visit omega.com/hh806
HH800-SW	Windows software and USB cable (USB models only)
HH800W-RSW	Windows software and wireless receiver (wireless models only) USA version
HH800WE-RSW	Windows software and wireless receiver (wireless models only) European version
HH804-CONNECTOR	Spare DIN connector

APPENDIX J – DATA COLLECTION DEVICES

RTD SENSORS

Dual Element RTD Pipe Plug Sensors

RTD-NPT Series

- Ideal for Use in Pressure Vessel Applications, 172 bar (2500 psi) Max
- PFA Insulated Lead Wires
- High-Accuracy, 100 Ω, Thin-Film Class "A" DIN Platinum Elements
- 3-Wire Construction for Connecting to Most Handheld Instruments

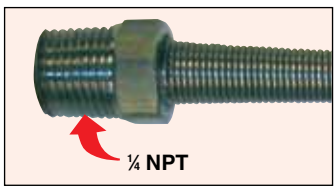

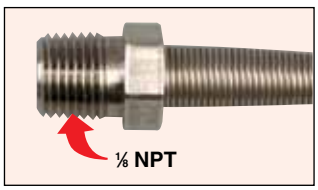

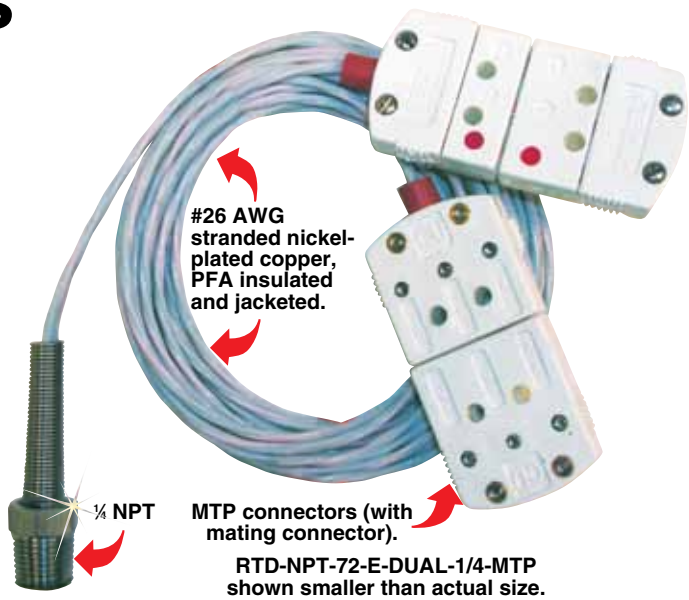

To Order

Model Number	Sensing Element	Cable	Thread Size	Max Temp
RTD-NPT-72-E-DUAL-1/4-MTP	100 Ω Class "A" DIN	72" L PFA insulated with MTP connectors	¼ NPT	230°C (450°F)
RTD-NPT-72-E-DUAL-1/8-MTP	100 Ω Class "A" DIN	72" L PFA insulated with MTP connectors	⅛ NPT	230°C (450°F)
RTD-NPT-72-E-DUAL-1/8-MTP-HT	100 Ω Class "A" DIN	72" L fiberglass insulated with MTP connectors	⅛ NPT	480°C (896°F)
RTD-NPT-72-E-DUAL-1/4-MTP-HT-S	100 Ω Class "A" DIN	72" L SST braided fiberglass insulated with MTP connectors	¼ NPT	480°C (896°F)

Ordering Examples: RTD-NPT-72-E-DUAL-1/8-MTP, *dual 100 Ω Class "A" DIN Platinum thin-film elements, 3-wire connections, ⅛ NPT mounting thread, 72" long PFA insulated cables with MTP connectors.* ***RTD-NPT-72-E-DUAL-1/8-MTP-HT,*** *dual 100 Ω Class "A" DIN Platinum thin-film elements, 3-wire connections, ⅛ NPT mounting thread, 72" long fiberglass insulated cables with MTP connectors.*

Options: *Sensors supplied with MTP connectors standard. For OTP connectors add* ***"-OTP"*** *to model number for an additional cost. For NO connectors remove "****-MTP****" from model number for a subtraction in cost (leads will be stripped). For a 3-pin audio connector, add* ***"-TA3F"*** *to the model number for an additional cost.*

Popular Options Include:

CN1A visit omega.com/cn1a

DP461-RTD meter visit omega.com/dp460-t

iDRX/iDRN signal conditioner, visit omega.com/idrn-idrx

DRF-RTD signal conditioner visit omega.com/drf-rtd

How are OMEGA's Model Numbers Constructed?

RTD — NPT — 72 — E — DUAL — 1/8 — OTP — HT — S

- **72**: Cable Length: In Inches
- **E**: Temperature Coefficient: E = European 0.00385 Ω/Ω/°C
- **1/8**: Mounting Thread: (Blank) = ¼ NPT; ⅛ = ⅛ NPT
- **OTP**: Termination Options: TA3F = Audio Connectors; OTP = OTP Connectors; (MTP) = MTP Connectors; (Blank) = Stripped Leads
- **HT**: Temperature Range: (Blank) = 230°C max; HT = 480°C max
- **S**: Cable Options: S = Steel Overbraid; (Blank) = None

Ordering Example: RTD-NPT-72-E-DUAL-OTP-HT-S, *two 100 Ω class "A" DIN, 72" fiberglass insulated, ¼ NPT, 480°C (896°F), and OTP connector.*

Pipe Plug RTD Sensor

RTD-NPT Series

- Ideal for Use in Pressure Vessel Applications, 172 bar (2500 psi) Max
- 6 mm (0.24") Diameter, SST Probe
- Steel Braided, PFA Insulated Lead Wires
- High-Accuracy, 100 Ω, Class "A" DIN Thin-Film Platinum Element (European Curve)
- 3-Wire Construction for Connecting to Most Handheld Instruments

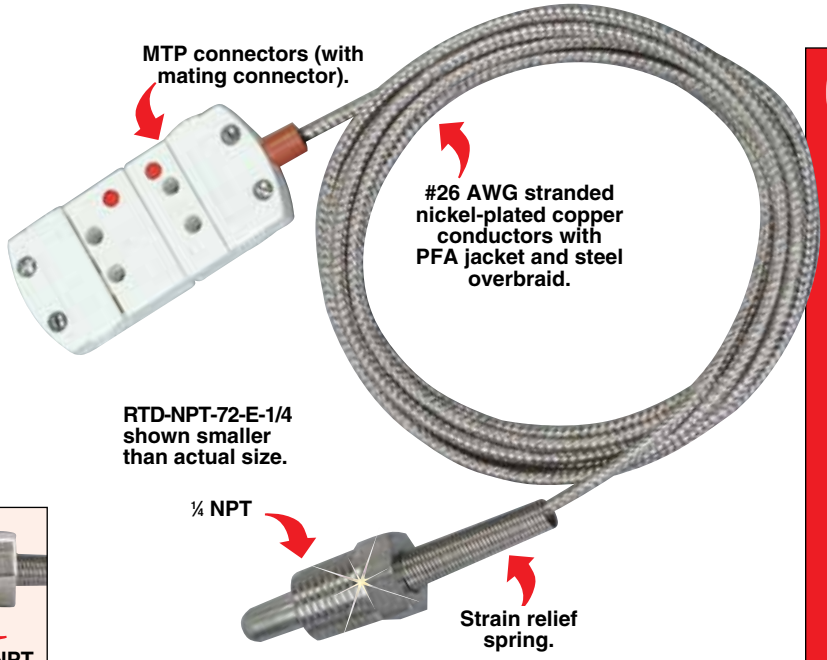

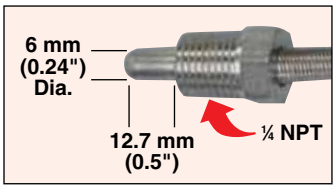

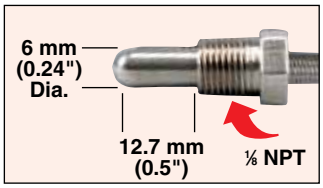

To Order

Model Number	Sensing Element	Cable	Thread Size	Max Temp
RTD-NPT-72-E-1/4	100 Ω Class "A" DIN	72" L PFA insulated (stripped leads)	¼ NPT	230°C (450°F)
RTD-NPT-72-E-1/4-MTP	100 Ω Class "A" DIN	72" L PFA insulated	¼ NPT	230°C (450°F)
RTD-NPT-72-E-1/8-MTP	100 Ω Class "A" DIN	72" L PFA insulated	⅛ NPT	230°C (450°F)
RTD-NPT-72-E-1/4-MTP-HT	100 Ω Class "A" DIN	72" L fiberglass insulated	¼ NPT	480°C (896°F)
RTD-NPT-72-E-1/8-MTP-HT	100 Ω Class "A" DIN	72" L fiberglass insulated	⅛ NPT	480°C (896°F)

Ordering Examples: ***RTD-NPT-72-E-1/4-TA3F,*** *100 Ω Class "A" European curve, single element, with ¼ NPT mounting thread, 72" long PFA insulated cable with audio connector.* ***RTD-NPT-72-E-1/4-MTP-HT,*** *100 Ω Class "A" European curve, single element, with ¼ NPT mounting thread, 72" long fiberglass insulated cable with steel overbraid.* ***RTD-NPT-72-E-1/8-MTP-HT,*** *Class "A" element, European curve, with ⅛ NPT mounting thread, 72" long fiberglass insulated cable with SST braid.*

Options Available: *Sensors supplied with MTP connectors, add* ***"-OTP"*** *to model number for an additional cost for each heavy-duty connector, add* ***"-TA3F"*** *to model number for an additional cost for each audio connector. For stripped leads (no connector) remove* ***"-MTP"*** *from model number, and subtract from cost.*

Popular Options Include:

CN3271-R1 high/low limit controller visit omega.com

DP25B-RTD ⅛ DIN panel meter visit omega.com

SPRTX, 4 to 20 mA transmitter visit omega.com

TX92 transmitter visit omega.com

How are OMEGA's Model Numbers Constructed?

RTD — NPT — 72 — E — 1/8 — OTP — HT

- 72: Cable Length: In Inches
- E: Temperature Coefficient: E = European 0.00385 Ω/Ω/°C
- 1/8: Mounting Thread ⅛ = ⅛ NPT (Blank) = ¼ NPT
- OTP: Termination Options: TA3F = Audio Connector, OTP = OTP Connector, MTP = MTP Connector, (Blank) = Stripped Leads
- HT: Temperature Range: (Blank) = 230°C max, HT = 480°C max

Ordering Example: RTD-NPT-72-E-OTP-HT*, 100 Ω Class "A" European curve, with ¼ NPT, 72" L fiberglass insulated cable, heavy-duty connector.*

APPENDIX J – DATA COLLECTION DEVICES

CALIBRATION METER

ECONOMICAL HANDHELD DIGITAL CALIBRATOR AND THERMOMETER
TYPE J/K/T/E

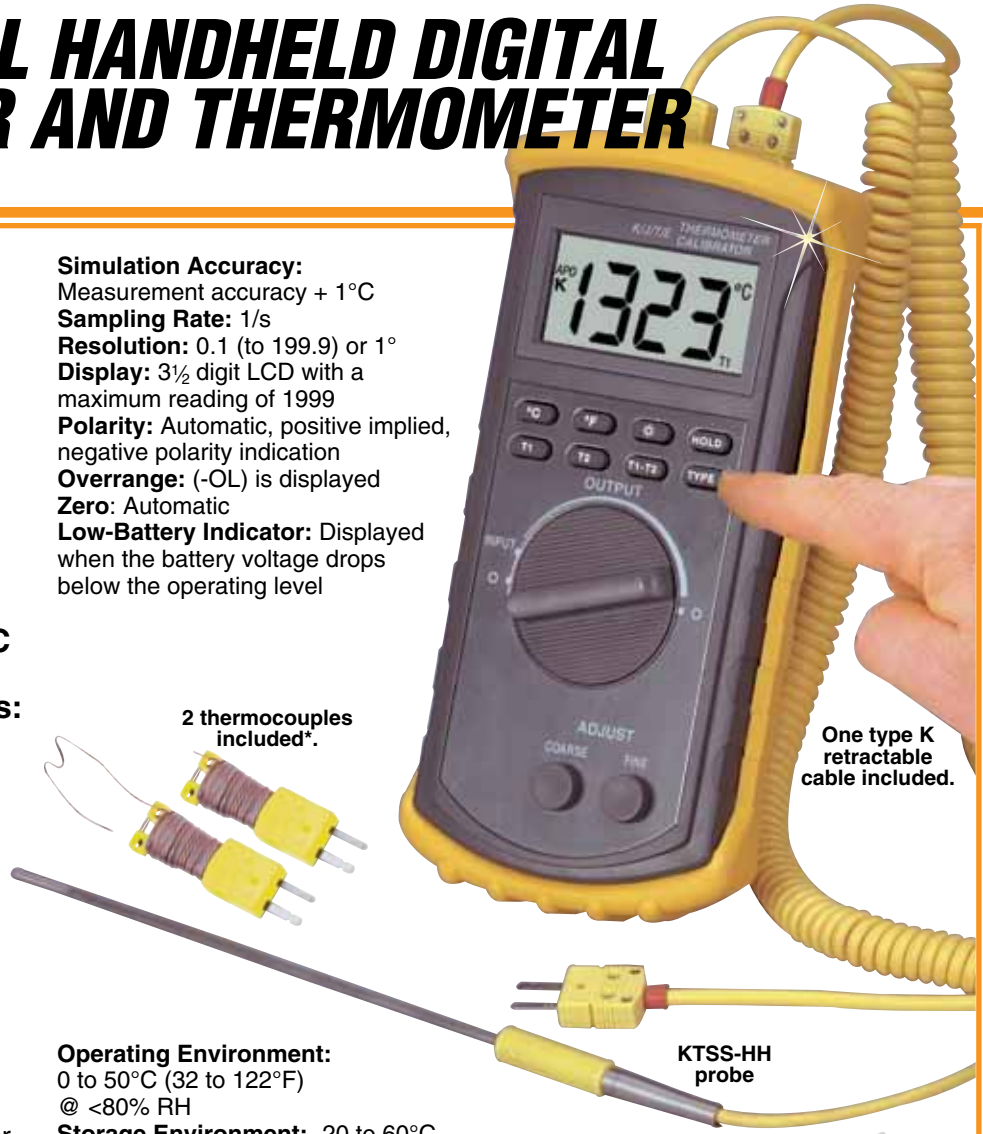

CL3512A

1 YEAR WARRANTY · CE · NIST Points

- Large, 3½ Digit Display
- Measures -220 to 1372°C (-364 to 1999°F)
- Dual Temperature Inputs: T1, T2, T1-T2
- Hold Function
- °C/°F Selectable
- 0.1°/1° Display Resolution
- Rugged Case Design with Rubber Boot
- Backlit LCD

The inexpensive CL3512A calibrator/thermometer is two meters in one. It is both a simulator and a thermometer for type J/K/T/E thermocouple signals. Signals can be adjusted with the coarse and fine dials. Features include a large, 3½ digit display with backlighting and hold and °C/°F functions.

Simulation Accuracy: Measurement accuracy + 1°C
Sampling Rate: 1/s
Resolution: 0.1 (to 199.9) or 1°
Display: 3½ digit LCD with a maximum reading of 1999
Polarity: Automatic, positive implied, negative polarity indication
Overrange: (-OL) is displayed
Zero: Automatic
Low-Battery Indicator: Displayed when the battery voltage drops below the operating level

Operating Environment: 0 to 50°C (32 to 122°F) @ <80% RH
Storage Environment: -20 to 60°C (-4 to 140°F), 0 to 80% RH with battery removed from meter
Dimensions: 195 H x 92 W x 53 mm D (7.7 x 3.6 x 2.1")
Weight: Approximately 250 g (9 oz)
Battery: 9V (included)
Battery Life: Approx. 100 hr

Included!
All CL3512A models include two free 0.9 m (36") Type K beaded wire thermocouples with subminiature connector and wire spool caddy.
***Order Spares! Model No. SC-GG-K-30-36**

SPECIFICATIONS

Thermocouple Type: J/K/T/E
Temperature Range:
Type K: -200 to 1372°C (-328 to 1999°F)
Type J: -210 to 1200°C (-346 to 1999°F)
Type T: -200 to 400°C (-328 to 752°F)
Type E: -220 to 1000°C (-364 to 1832°F)
Auto-Ranging: 0.1° to 1° resolution above 199.9 (°C or °F)
Measurement Accuracy: Accuracy is specified for operating temperatures from 18 to 28°C (64 to 82°F), for 1 year, not including thermocouple error;
±(0.1% rdg + 1°C) range -60 to 1372°C
[±(0.1% rdg + 2°F) range -76 to 1999°F]
±(0.1% rdg + 2°C) range -60 to -220°C
[±(0.1% rdg + 4°F) range -76 to -364°F]

To Order

MODEL NO.	DESCRIPTION
CL3512A	J, K, T, E thermometer/calibrator

ACCESSORIES

MODEL NO.	DESCRIPTION
SC-HH500	Soft case
RSC-J-1-4-4	J cable (retractable with 2 SMP-M connectors)
RSC-T-1-4-4	T cable (retractable with 2 SMP-M connectors)
RSC-E-1-4-4	E cable (retractable with 2 SMP-M connectors)
RSC-K-1-4-4	K cable (spare) (retractable with 2 SMP-M)
88013K	Surface probe up to 815°C (1500°F)
KTSS-HH	Immersion thermocouple probe, Type K

Comes complete with 9V alkaline battery, rubber boot, 2 Type K thermocouples, NIST with 8 points, 1 Type K cable and operator's manual.
***Ordering Example**: **CL3512A,** digital thermometer/calibrator.*

APPENDIX J – DATA COLLECTION DEVICES

THERMOCOUPLE THERMOMETER

Wireless and High Accuracy Data Logger/Thermometers

HH806 Series

1 YEAR WARRANTY · CE · NIST

Standard
No Points

HH806AW Comes with Windows software, USB cable, wireless receiver and AC adaptor, and 2 thermocouples

- **Wireless Models HH806W, HH806AW**
- **Dual Inputs**
- **7 Thermocouple Types**
- **Triple Display**
- **Data Logging**
- **Includes NIST-Traceable Calibration Certificate (No Points)**
- **High/Low Alarm (Audible)**
- **Auto Power-Off**
- **MAX/MIN/MAX/MIN/AVG/REL/HOLD**
- **Thermocouple Offset**
- **Optional USB Interface**
- **Optional AC Adaptor**

HH806AU Features built-in USB port for use with optional windows software

Wireless Models Available! Monitors Up to 10 Different Meters With 1 Receiver

The HH806 represents the top of the line in the HH800 series of handheld thermometers. All of the HH806 versions feature exceptional 0.05% basic accuracy and include a triple display as well as data logging capabilities. At a push of a button the HH806W can store up to 128 samples on demand, and at a user specified logging interval up to 1024 in data logging mode. The HH806AU and HH806AW expand the data logging capabilities further and allow storage of up to 256 samples on demand and up to 16,000 in data logging mode. All versions of the HH806 feature three easy to read displays. Two 4½ digit displays are selectable for T1 or T2 and the third 6 digit display can be used for T1-T2 or to show the current date and time. Windows software is available for all models but is included with the HH806AW, as is the USB cable, wireless receiver, and AC adaptor (HH806AW only).

Specifications

Measurement Range:

Type K: -200 to 1372°C (-328 to 2501°F)
Type J: -210 to 1200°C (-346 to 2192°F)
Type T: -200 to 400°C (-328 to 752°F)
Type E: -220 to 1000°C (-364 to 1832°F)
Type R: 0 to 1767°C (32 to 3212°F)
Type S: 0 to 1767°C (32 to 3212°F)
Type N: -50 to 1300°C (-58 to 2372°F)

Accuracy: Stated accuracy at 23°C ±5°C, <75% RH

OMEGA CARE℠ Extended Warranty Program

OMEGACARE℠ extended warranty program is available for models shown on this page. Ask your sales representative for full details when placing an order. OMEGACARE℠ covers parts, labor and equivalent loaners.

HH806AW, shown actual size.

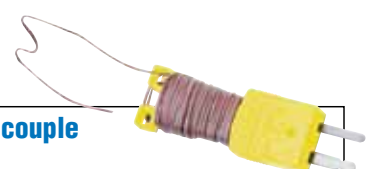

Free Thermocouple Included!

These models include a free 1 m (40") Type K insulated beaded wire thermocouple with subminiature connector and wire spool caddy (1 per channel). **Order a Spare! Model No. SC-TT-K-30-36.**

Type K/J/T/E:
±(0.05% rdg + 0.3°C) -50 to 1372°C
±(0.05% rdg + 0.7°C) -50 to -210°C
±(0.05% rdg + 0.6°F) -58 to 2501°F
±(0.05% rdg + 1.4°F) -58 to -346°F

Type N:
±(0.05% rdg + 0.8°C) -50 to 0°C
±(0.05% rdg + 0.4°C) 0 to 1300°C
±(0.05% rdg + 1.6°F) -58 to 32°F
±(0.05% rdg + 0.8°F) 32 to 2372°F

Type R/S:
±(0.05% rdg + 2 0°C to 1767°C
±(0.05% rdg + 4 32°F to 3212°F

Operating Environment: 0 to 50°C (32 to 122°F) at <70% RH

Storage Temperature: -20 to 60°C (-4 to 140°F), 0 to 80% RH with battery removed

Battery: 4 x 1.5V "AAA" (included)

Dimensions: 160 H x 83 W x 38 mm D (6.3 x 3.3 x 1.5")

Wireless Features:
Frequency Range: USA 900 MHz
European 868.0 to 868.6 MHz
Current Consumption: 5 to 20 mA
Approximate Range: 25 m (75')

To Order

Model No.	HH806W (Wireless)	HH806AU	HH806AW (Wireless)
Units	°C/°F	°C/°F	°C/°F
Display	Triple Display	Triple Display	Triple Display
Input Types	K/J/T/E/R/S/N	K/J/T/E/R/S/N	K/J/T/E/R/S/N
Data Storage	128 on demand + 1024 in logging mode	256 on demand + 16000 in logging mode	256 on demand + 16000 in logging mode
No. of Inputs	2	2	2
Wireless	Yes	No	Yes
USB Port	No	Yes	Yes
DC Power Jack	No	Yes	Yes
Resolution	0.1° to 1999°; 1° above (auto ranging)		

Note: *All wireless units are USA, 900 Mhz frequency band versions. For European 868.0 Mhz~868.6 Mhz frequency band versions, add suffix **"E"**, no additional charge.*

Comes complete with NIST certificate (no points), 4 "AAA" batteries, Type K thermocouple (one per channel), rubber boot and operator's manual. HH806AW also comes with software, USB cable, wireless receiver and AC adaptor.

Ordering Examples: HH806AU, *high accuracy data logger and **HH800-SW**, Windows software. **OCW-3,** OMEGACARE℠ extends standard 1-year warranty to a total of 4 years.*

Accessories

Model No.	Description
HH800-ADAPTOR	AC adaptor (USB models only)
SC-800	Soft case with belt loop for HH800 series

Software For HH800 Series with USB or Wireless Interface Software for Windows 2000 and Windows XP with Wireless Receiver

HH800-SW

HH800W-RSW Windows software and wireless receiver (wireless models only).

Laptop not included.

- **Data Logging and Retrieval Software for USB**
- **Display Retrieved Data in Graphic Format**
- **Display MAX/MIN/AVG/REL**
- **High/Low Alarms**
- **Selectable Logging Interval**
- **Provided on 3.5" CD**

The HH800-SW and the HH800W-RSW both allow real time data logging to a PC. For wireless enable meters HH800W-RSW comes with both the software and wireless receiver, while for meters with USB, HH800-SW comes with the software and a USB cable. Both versions of software are identical and can work interchangeably. For meters with built in data storage, the software allows users to download and analyze data on there PC. Users can also export data to Excel or text files for further manipulation.

To Order

Model No.	Description
HH800-SW	Windows software and USB cable (USB models only)
HH800W-RSW	Windows software and wireless receiver (wireless models only) USA version
HH800WE-RSW	Windows software and wireless receiver (wireless models only) European version

Ordering Example: HH800-SW, *data logging software for HH800 Series meters wth built-in USB port.*
Hardware Requirements: Pentium III, 700 Mhz or better, minimum of 150 MB free hard disk space is recommended, single USB port.

APPENDIX J – DATA COLLECTION DEVICES

THERMOCOUPLE SENSORS

Ready-Made PFA Insulated Thermocouples
Hermetically Sealed Tip Design with Stripped Leads

HSTC Series

MEETS OR EXCEEDS SPECIAL LIMITS OF ERROR (SLE) AND EN 60584-2: Tolerance Class 1

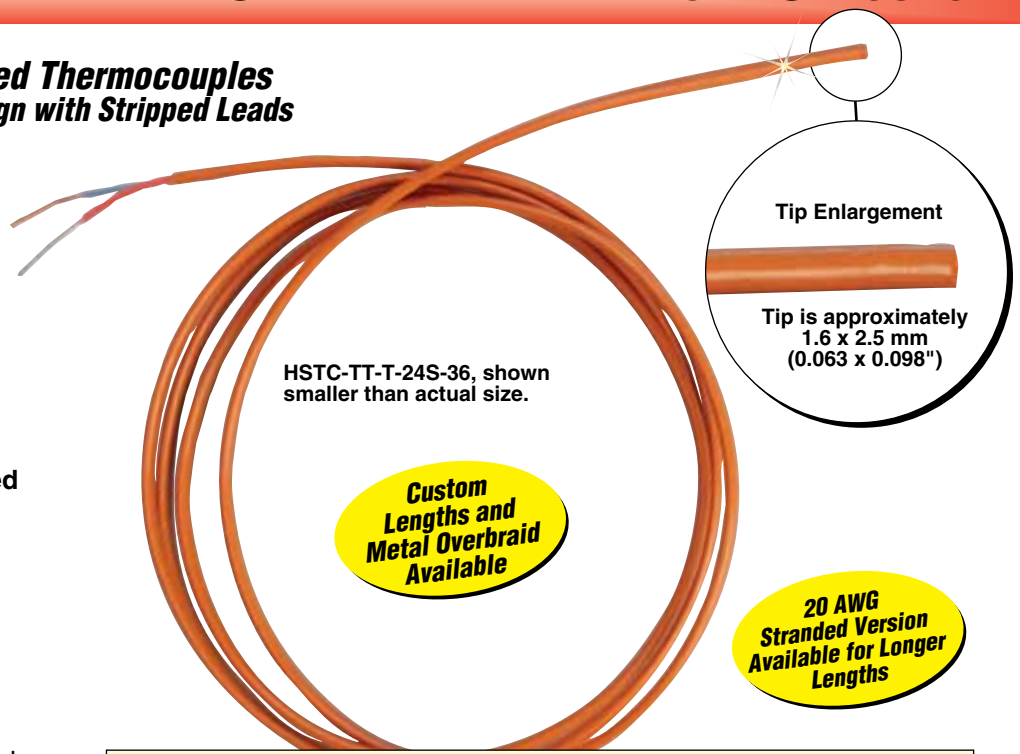

- Seal-Welded Tip
- Highly Resilient to Chemicals and Oils
- Electrically-Insulated Junction
- Easily Cleaned and Sterilized
- Small Size Provides a Fast Response
- Rated to 250°C (482°F)
- 24 AWG Stranded Thermocouple Grade Wire Standard, 20 AWG Stranded Available for Longer Lengths

These PFA insulated thermocouple wire sensors are hermetically seal-welded at the sensor tip to provide continuous PFA protection over the measurement junction. This unique design provides a small, flexible, and electrically isolated thermocouple, suited to a variety of applications.

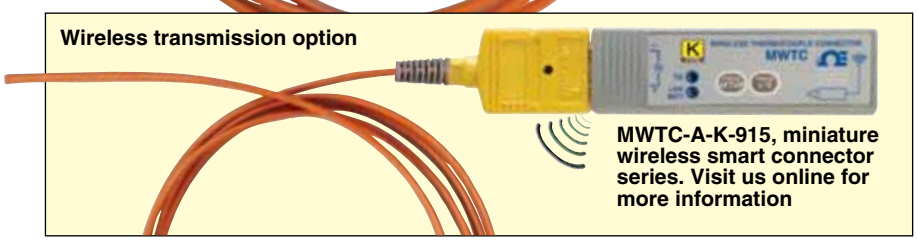

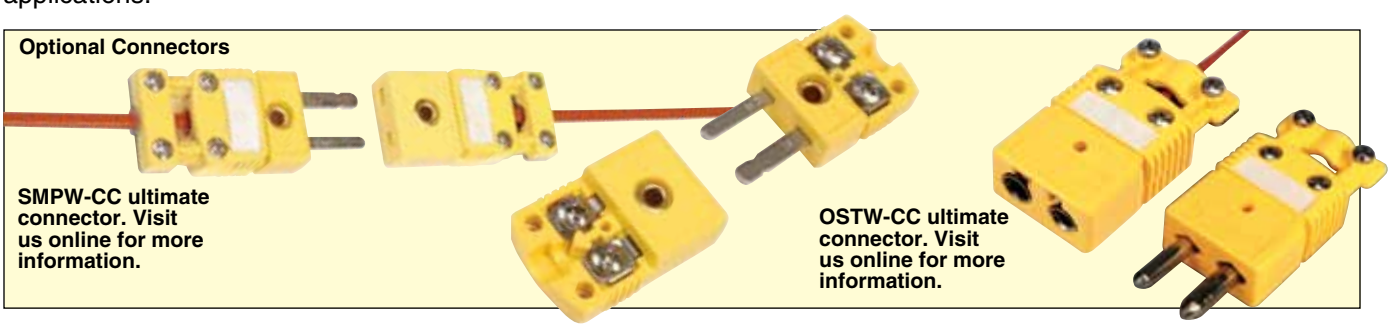

To Order

Model No.	Description
HSTC-TT-(*)-24S-36	Hermetically sealed tip thermocouple, 1 m (40"), stripped ends
HSTC-TT-(*)-24S-72	Hermetically sealed tip thermocouple, 2 m (80"), stripped ends
HSTC-TT-(*)-24S-120	Hermetically sealed tip thermocouple, 3 m (120"), stripped ends
HSTC-TT-(*)-24S-36-SMPW-CC	Hermetically sealed thermocouple, 1 m (40"), ultimate SMPW male with cable clamp
HSTC-TT-(*)-24S-72-SMPW-CC	Hermetically sealed thermocouple, 2 m (80"), ultimate SMPW male with cable clamp
HSTC-TT-(*)-24S-120-SMPW-CC	Hermetically sealed thermocouple, 3 m (120"), ultimate SMPW male with cable clamp

** Insert calibration **J, K, T,** or **E.***

*For additional cost 300 mm (12") of TT wire. To order thermocouple with full size connector, replace **"SMPW"** in the model number with **"OSTW"**, no additional charge. To order **20 AWG** stranded thermocouple for longer lengths, replace **"24S"** in the model with **"20S"** for additional cost.*

***Ordering Example: HSTC-TT-K-24S-36-SMPW-CC,** 1 each, PFA insulated thermocouple, Type K calibration (CHROMEGA®-ALOMEGA®), 24 stranded AWG, 1 m (40") L, ultimate mini male connector with strain relief.*

APPENDIX K – OPEN COOLING TOWER

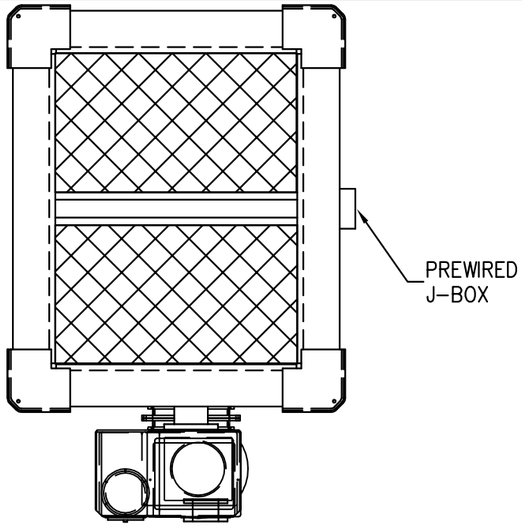

GENERAL INFORMATION:

BASIC DATA (PER MODULE):

ACTUAL DESIGN GPM	–	120
HWT(°F)	–	120
CWT(°F)	–	84
WBT(°F)	–	78

MOTOR DATA (PER MODULE

BRAND	–	BALDOR (OR EQUIV)
EFFICIENCY	–	HIGH
HP	–	7.5
VOLTAGE	–	460
AMPS	–	12.6
HZ	–	60
PHASE	–	3
NUMBER	–	10
POWER FACTOR	–	.68

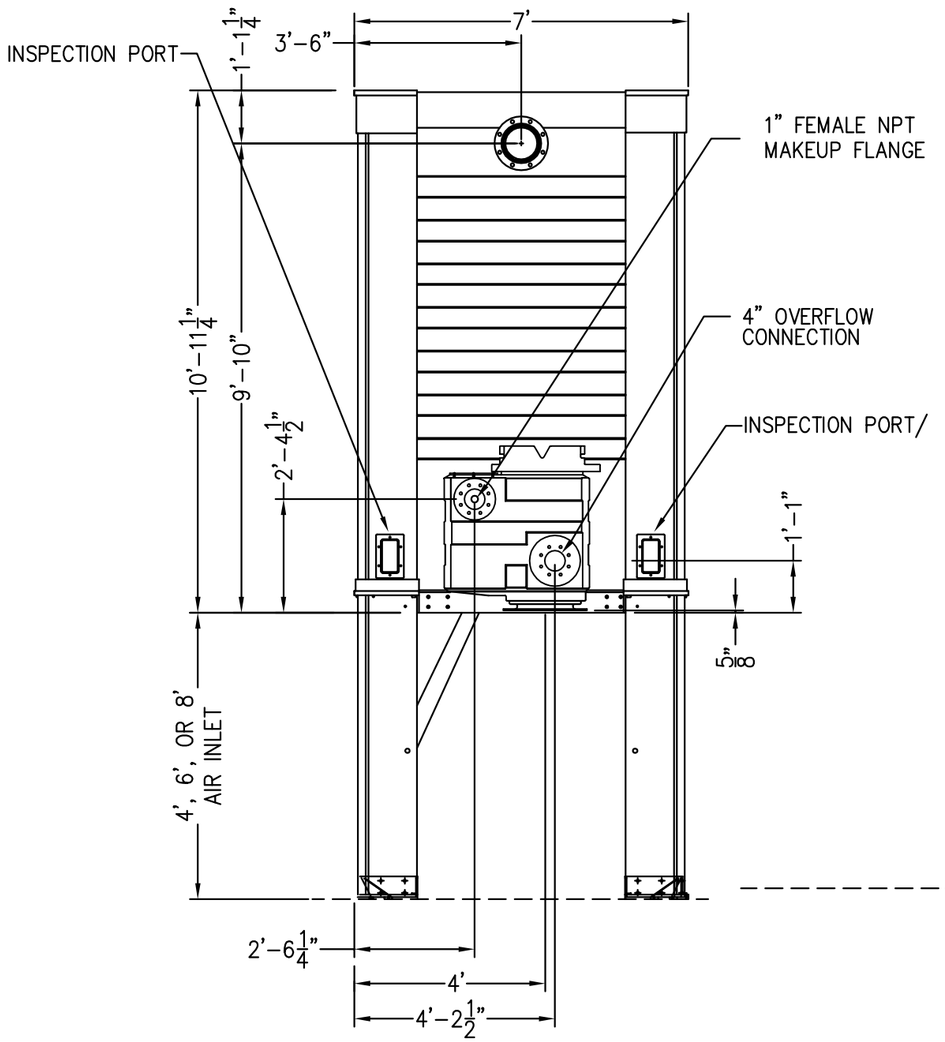

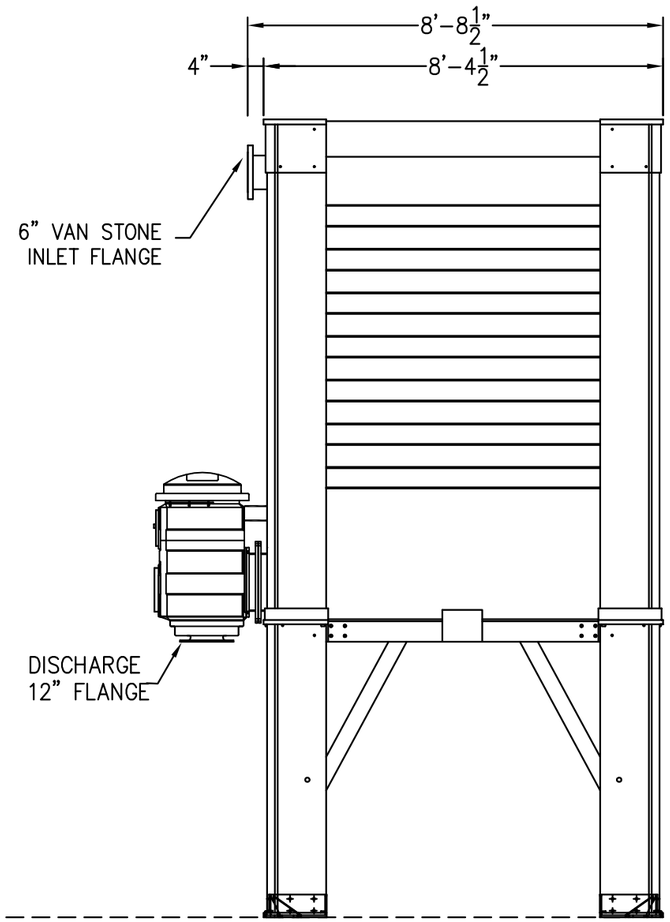

1 CELL PLAN

ALL DIM ARE ±1/2"

TOWER TECH, Inc.
THE TECHNOLOGY COMPANY
TELEPHONE: (405) 290-7788
FAX: (405) 979-2131
E-MAIL: cad@towertechinc.com
WEBPAGE: http//www.towertechinc.com
P.O. BOX 891810
OKLAHOMA CITY, OKLAHOMA 73189

Modular
Cooling Tower
Model # TTEF-56

©1998 BY TOWER TECH, INC.

Tower Tech Inc.
1-Unit Installation

FOR APPROVAL BY	DATE
TOWER TECH	

REVISIONS

NO.	DATE	REVISION

DATE:	31 Jul 00
DRAWING#:	EF56-2
PROJECT#:	LIBRARY
CUST PO#:	
DRAWN BY:	RB
CHECKED BY:	
PLAN AND ELEVATION	2

APPENDIX L – CLOSED CIRCUIT COOLING TOWER

Submittal Data Form

12-2-2014

Sold To :	**Republic Services Procurement, Inc.** 700 Niehoff, Suite F Eureka, MO 63025 United States	**Project:** **Purchase Order No:** **Engineer:** **BAC Order #** **Representative:**	Bridgeton Landfill 4701161 U150293512 ROGER L ECHELMEIER COMPANY

All Information is per Unit

Quantity: 1 Model FXV-0812B-36T-M CLOSED CIRCUIT COOLING TOWER

Certified Capacity: 250.00 USGPM of 30% Propylene Glycol from 108.00°F to 85.00°F at 78.00°F entering air wet bulb and 2.45 PSIG fluid pressure drop.

Fan Motor(s): One (1) 20 HP fan motor(s): Totally Enclosed, Air Over (TEAO), 1 Speed/1 Winding - Premium Efficiency (Inverter Duty), suitable for 460 volt, 3 phase, 60 hertz electrical service.. Drives are based on 0 inches ESP.

NOTE: Inverter Duty fan motors, furnished in accordance with NEMA Standard Mg.1 -- Part 31, are required for applications using variable frequency drives for fan motor control.

Pump(s): One (1) 5 HP pump motor: 1 Speed/1 Winding - Energy Efficient, suitable for 460 volt, 3 phase, 60 hertz.

Submittal Information		Equipment Summary
BAC Terms and Conditions of Sale		CTI Certified Thermal Performance
Mechanical Specifications		Steel Panels and Structural Members are Constructed of Galvanized Steel
Certificate of Wind and Seismic Load Capacity		Standard Fan
Submittal Drawings/Diagrams		Galvanized Steel Fan Guard
		PVC Fill & Drift Eliminators
		Galvanized Steel, Full Circuit Coil
UP-U150293512-R1	Unit Print - RH	Integral Pumps with End Make-Up, Drain and Overflow Connections
SS- U150293512-R1	Unit Support	Mechanical Float Valve Assembly
CG- U150293512-R1	Center of Gravity	Electric Immersion Heaters Sized to Maintain +40°F water at a 0°F Ambient with Electrical Requirements Matching Fan Motor(s)
BA- U150293512-R1	Basin Accessories	Copper Heater Elements
ML- U150293512-R1	Motor Location	Electric Immersion Heater Controls
EA- U150293512-R1	External Access	External Platform with Safety Gate and Ladder Located on Louver Face(s) of Unit
IA- U150293512-R1	Internal Access	Internal Walkway and Ladder
BAC-C50-39189-1	Controls Enclosure	NEMA 3R Combined Drive(s)
BAC-CC-C-2-V1N-A0A -1-A0A-A0A-0-1J1-1J1 -A-3-0Z-A-A-B	Controls Wiring	Temperature Sensor Only
BAC-12623	Temperature Sensor Only	

THANK YOU FOR YOUR BUSINESS!
Rigging and Installation Instructions, as well as Operating and Maintenance Instructions are available at www.baltimoreaircoil.com

© 2014 Baltimore Aircoil Company
Corporate Headquarters: 7600 Dorsey Run Road, Jessup, MD 20794 – Tele: (410) 799-6200 / Fax: (410) 799-6416

BALTIMORE AIRCOIL COMPANY

Mechanical Specifications

12-2-2014

Customer: Republic Services Procurement, Inc.
Project: Bridgeton Landfill
Purchase Order No: 4701161
Engineer:
BAC Order # U150293512

All Information is per Unit

Quantity: 1 Model FXV-0812B-36T-M CLOSED CIRCUIT COOLING TOWER

CTI Certification:

The thermal performance is certified by the Cooling Technology Institute in accordance with CTI Certification Standard STD-201.

Materials of Construction:

All structural steel components are constructed from G-235 (Z700 metric) hot-dip galvanized steel. The edges of the hot-dip galvanized steel components are given a protective coat of zinc-rich compound. The basin includes a depressed section with drain/clean-out connection and the areas under the fill sections are sloped toward the depressed section for easy cleaning.
The casing is constructed entirely from heavy gauge, G-235 (Z700 metric) hot-dip galvanized steel panels. Hinged access doors are provided on each side wall of the tower for access to the eliminators and the fan plenum section for all cells. The doors are made of a steel frame matching the unit construction.
The air inlet louvers are constructed of PVC honeycomb shape louver which also act as an air inlet screen and block sunlight to the basin and the front of the fill.

Fan Type:

The unit is provided with the standard fan to maximize the capacity. The fan is driven by the BALTIDRIVE Power Train. This drive system consists of cast aluminum sheaves located on minimum shaft centerline distances. A premium efficient fan motor provides maximum performance and is backed by BAC's comprehensive 5-year motor and fan drive warranty.

Fan Guard(s):

A heavy gauge, G-235 (Z700 metric) hot-dip galvanized steel wire fan guard is provided over each fan cylinder.

Fill:

The BACross® Fill and integral drift eliminators are formed from self-extinguishing (per ASTM D-568) polyvinyl chloride (PVC), having a flame spread rating of 5 per ASTM Standard E84-77a, and are impervious to rot, decay, and fungus or biological attack. The fill is elevated above the cold water basin floor to facilitate cleaning. This fill is suitable for a maximum entering water temperature of 130°F (54.44°C). The eliminators are designed to effectively strip entrained moisture from the leaving airstream with a minimum of air resistance.

Coil Type:

The coil is suitable for cooling fluids compatible with carbon steel in a closed system. The coil(s) will be constructed with continuous 1.05" O.D. all prime surface steel tubes continuously formed and bent in a serpentine shape, encased in steel framework. The entire assembly is hot-dip galvanized after fabrication. Tubes will be sloped for liquid drainage. Coil has a maximum allowable working pressure of 300 psig (2170 kPa) and is tested at 375 psig (2685 kPa) air pressure under water. The system should have a vent placed at the highest point in the installation to facilitate filling and drainage (provided and installed by others).

Spray Water Pump Assembly:

Each cold water basin has an integral pump with large area, lift out, steel strainer screens including perforated openings sized smaller than the water distribution nozzle orifices. Strainers include anti-vortexing baffles to prevent air entrainment.. A close-coupled, bronze-fitted pump with a mechanical seal is mounted on the basin. The pump motors are premium efficient, totally enclosed, fan cooled (TEFC). A water bleed line with a metering valve to control the bleed rate is installed between the pump discharge and the overflow connection. Electrical requirements match the fan motor.

Basin Water Level Control:

The unit is supplied with a make-up valve with unsinkable polystyrene filled plastic float arranged for easy adjustment. The corrosion resistant make-up valve is suitable for water supply pressures between 15 psig (103 kPa) and 50 psig (345 kPa).

Basin Heater(s):

A minimum number of high-watt-density electric immersion heater elements, sized to maintain +40°F (+4°C) basin water at 0°F (-18°C) ambient with a 10 mph (16 km/h) wind speed, is provided. Electrical requirements match fan motor. Wiring is not included.

Heater Element Material of Construction:

The unit is supplied with copper heater elements.

Basin Heater Control:

An electric immersion heater control package, including thermostat(s) and low water cutout switch(es) or probe(s), is provided. Disconnect switch, contactor, and wiring are not included.

External Platform at Louver Face:

The unit will be configured with a platform (with FRP grating) with galvanized steel supports, an aluminum ladder and safety railing on the louver face. The safety rails will be constructed of 1 1/4" (32 mm) galvanized steel pipe. A spring loaded safety gate is provided. These access options meet OSHA standards. These components ship loose and are to be assembled and are installed in the field by others.

Internal Access Option:

The unit has access doors on both ends, an internal walkway, and an internal aluminum ladder with galvanized steel supports to facilitate access to the mechanical equipment. All components meet pertinent OSHA standards.

Controls:

Qty Per Order	BAC Control Package Selection
1	BAC Control Package System Voltage: 460 System Frequency: 60

Enclosed Control

Enclosure:	NEMA 3R
Disconnect Type:	Circuit Breaker
Control Voltage:	120

Qty	Item
1	Enclosed Control for (1) VFD 20 HP Main Fan Motor, (1) 5 HP Spray Pump Motor, (1) 8 kW Basin Heater; Includes Temperature Sensor with Transmitter and Thermowell Catalog Number: BAC-CC-C-2-V1N-A0A-1-A0A-A0A-0-1J1-1J1-A-3-0Z-A-A-B Enclosure Drawing: BAC-C50-39189-1 Wiring Diagram: BAC-CC-C-2-V1N-A0A-1-A0A-A0A-0-1J1-1J1-A-3-0Z-A-A-B

BALTIMORE AIRCOIL COMPANY

Certificate of Wind and Seismic Load Capacity
2006 and 2009 International Building Codes (IBC)

Customer:	**Republic Services Procurement, Inc**
Project:	**Bridgeton Landfill**
Purchase Order No:	**4701161**
Engineer:	
BAC Order #:	**U150296303**

Product Line:	FXV Closed Circuit Cooling Tower
Model Number:	FXV-0812B-36T-M

The Baltimore Aircoil Company evaporative cooling product referenced in this certificate has been designed, analyzed, and tested in accordance with the wind and seismic load requirements of the 2006 IBC, 2009 IBC, and ASCE/SEI 7-05. Seismic qualification is based on analysis and full-scale, tri-axial, shake-table testing conducted in accordance with ICC-ES Acceptance Criteria AC156 (2007), "Acceptance Criteria for Seismic Qualification By Shake-Table Testing of Nonstructural Components and Systems."

Wind and seismic load capacities for the referenced unit are provided below. It is the responsibility of the purchaser to determine the suitability of this unit for the specific application and to design the anchorage and support system for the project wind and seismic loads. Field modifications to the unit may void this certificate.

Wind Load Rating		
Design Wind Pressure (psf):	p = 35.00	
Installation Restrictions:	None	
Seismic Load Rating		
Design Spectral Acceleration (g) for Importance Factor, I_p = 1.0:	S_{DS} = 4.20	on grade (z/h = 0.0), rigid mount
	S_{DS} = 1.40	on rooftop (z/h = 1.0), rigid mount
	S_{DS} = 0.94	on rooftop (z/h = 1.0), flexible mount
Design Spectral Acceleration (g) for Importance Factor, I_p = 1.5:	S_{DS} = 1.5	on grade (z/h = 0.0), rigid mount
	S_{DS} = 2.4	on rooftop (z/h = 1.0), rigid mount
Installation Restrictions:	Outdoor	

Corporate Headquarters: P.O. Box 7322, Baltimore, MD 21227 - Tele: (410) 799-6200 / Fax: (410) 799-6416

2014© Baltimore Aircoil Company. All Rights Reserved.

Data Version 1.07
DWG Version 1.3

Notes
1) All dimensions are in feet and inches. Weights are in pounds.
2) Dimensions showing location of coil and spray water connections are approximate and should not be used for prefabrication of connecting piping.
3) The area above the discharge of the fan must be unobstructed.
4) For weight loading and support requirements refer to the suggested steel support drawing.
5) Do not support piping from unit connections. All necessary piping supports to be supplied by others.
6) Weights include all the options and accessories.
7) All unit piping conections 3" and smaller are MPT unless otherwise noted.
8) Coil is provided with a 1/2" threaded vent located on the upper outlet pipe stub.
9) All Coil conections are beveled for weld unless otherwise noted.

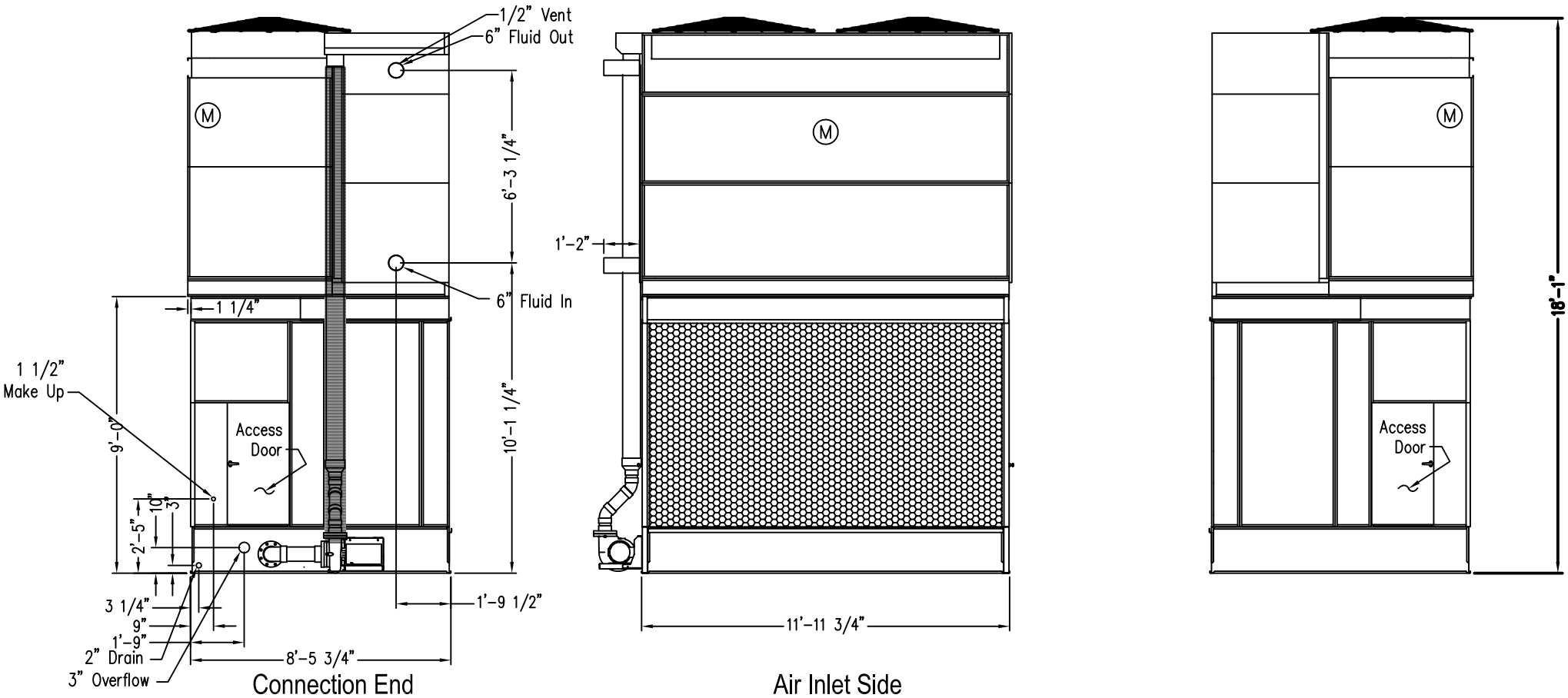

Model Number	Shipping Weight	Operating Weight	Heaviest Section
FXV-0812B-36T-M	13236	20454	9372

Right Hand

ORDER NO: **U150293512**

DATE: **12/2/2014**

BALTIMORE AIRCOIL COMPANY

8.5 X 12 Unit Print

DRAWING NUMBER:
UP-U150293512-R1

2014© Baltimore Aircoil Company. All Rights Reserved.

Data Version 1.07
DWG Version 1.01

Notes
1) Supporting steelwork and anchor bolts to be designed and furnished by others.
2) All supporting steel must be level at top.
3) Beams should be selected in accordance with accepted structural practice, maximum deflection of beam under unit to be 1/360 of span, not to exceed 1/2 inch.
4) Supporting steel will be greater than or equal to the length of the basin.
5) Alternatively the unit may be supported on columns at the four corners of the unit. Consult your BAC Representative for details.
6) If vibration isolation rails are used between unit and supporting steel, be certain to allow for the length of the vibration rails when determining length of supporting steel. Vibration rail length and mounting hole locations may differ from those of the unit. Refer to vibration isolator drawings for this data.
7) Each beam should be designed, as a minimum, for 65% of the total unit operating weight applied as a uniformly distributed load.
8) Do not use this drawing to size point vibration isolators. See your BAC Representative for details.
9) All Dimensions are in feet and inches. All weights are in pounds.
10) Weights include all of the options and accessories.

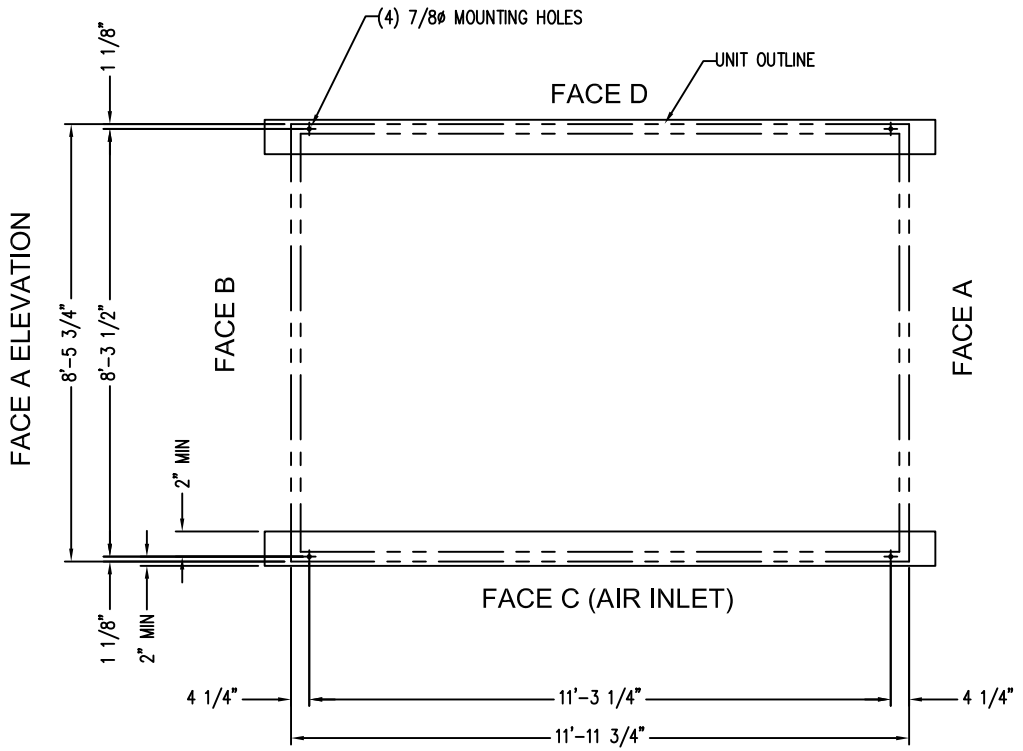

PLAN VIEW

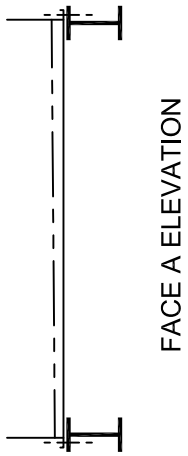

PLAN "A" STEEL

Model Number	Shipping Weight	Operating Weight
FXV-0812B-36T-M	13236	20454

ORDER NO: **U150293512**

DATE: **12/2/2014**

BALTIMORE AIRCOIL COMPANY

Single Cell Unit Support

DRAWING NUMBER:
SS-U150293512-R1

2014© Baltimore Aircoil Company. All Rights Reserved.

Data Version 1.07
DWG Version 1.0

Notes
1) All Dimensions are in feet and inches. All weights are in pounds.
2) Center of gravity location is based on operating weight.

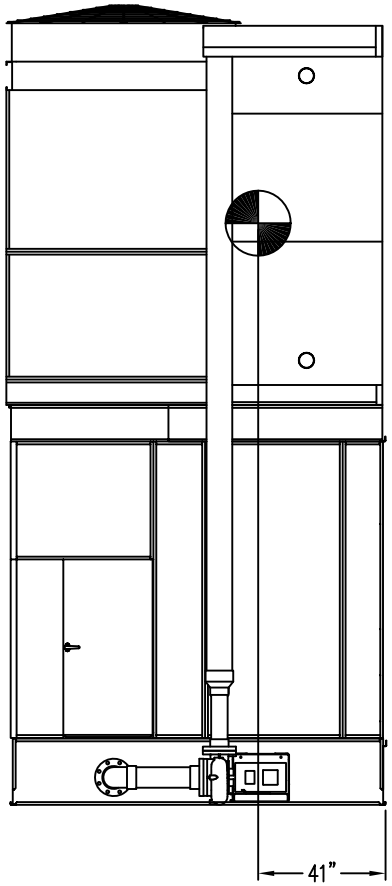

Connection End

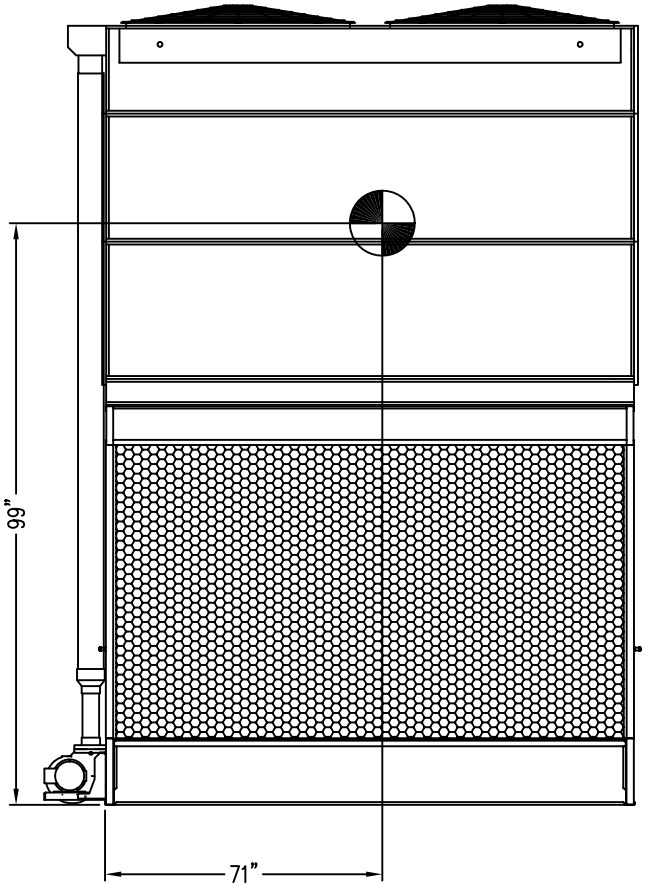

Air Inlet Side

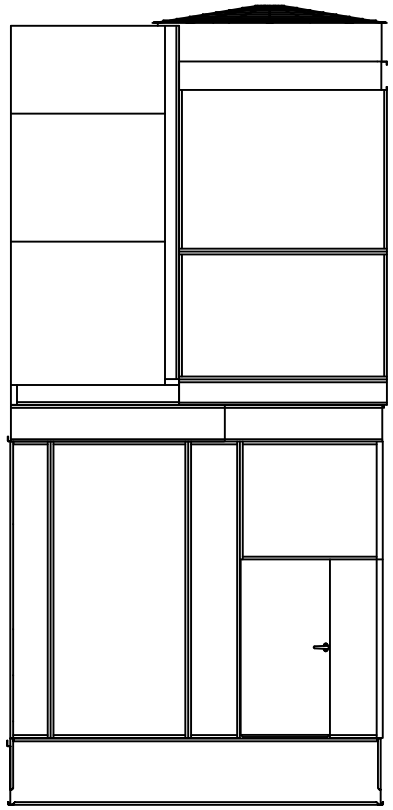

Model Number	Shipping Weight	Operating Weight	Heaviest Section
FXV-0812B-36T-M	13236	20454	9372

ORDER NO: **U150293512**

DATE: **12/2/2014**

BALTIMORE AIRCOIL COMPANY

8.5 X 12 Unit Center of Gravity

DRAWING NUMBER:
CG-U150293512-R1

2014© Baltimore Aircoil Company. All Rights Reserved.

Data Version 0.00
DWG Version 1.0

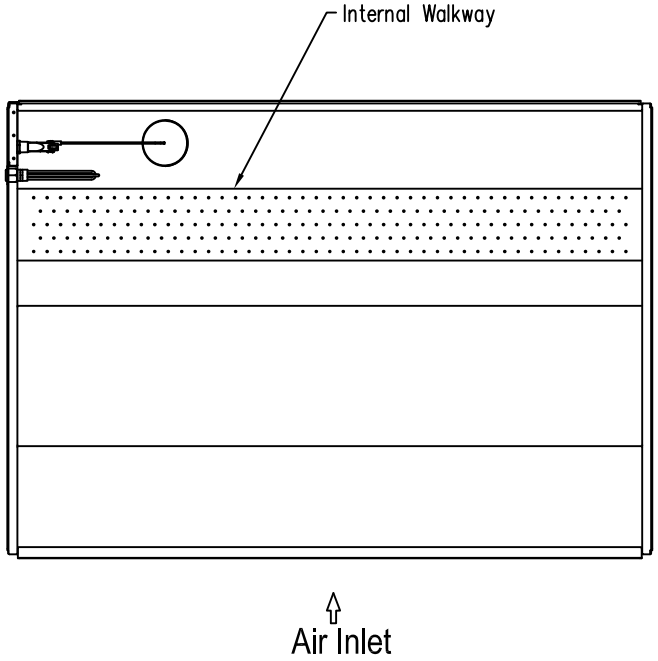

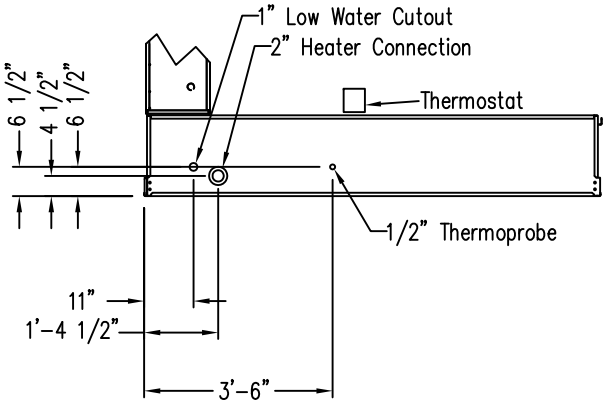

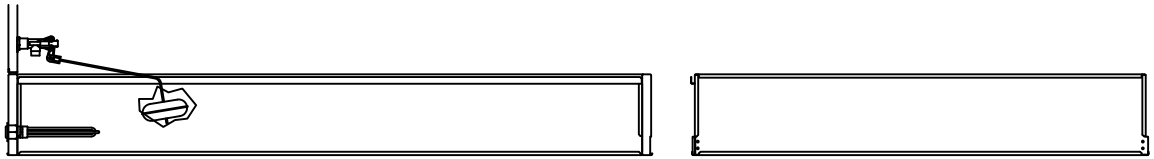

Air Inlet End

AMBIENT TEMPERATURE: 0 DEGREES F
POWER (EACH): 8 KW
VOLTAGE: 460V
PHASE: 3
FREQUENCY: 60HZ

ORDER NO: **U150293512**

DATE: **12/2/2014**

BALTIMORE AIRCOIL COMPANY

8.5 X 12 Basin Accessories

DRAWING NUMBER:
BA-U150293512-R1

2014© Baltimore Aircoil Company. All Rights Reserved.

Data Version 0.00
DWG Version 1.0

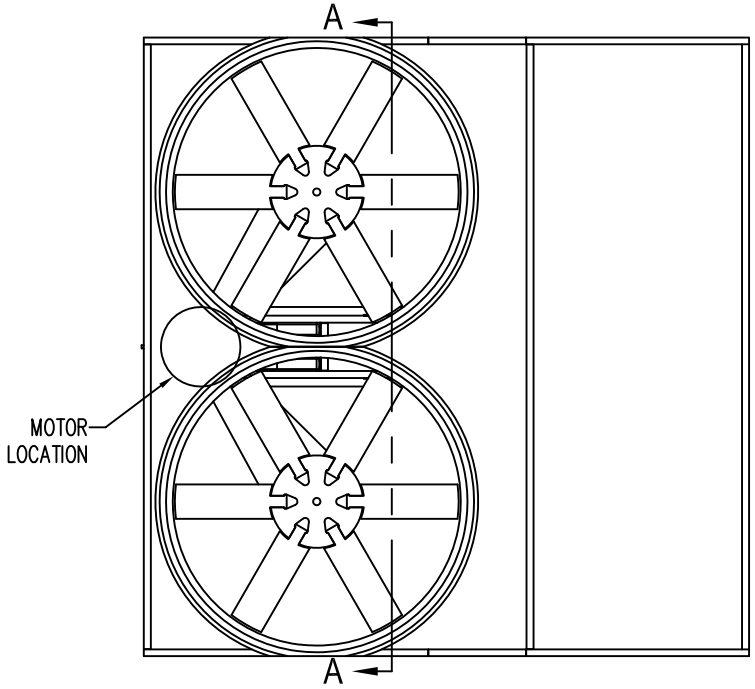

PLAN VIEW

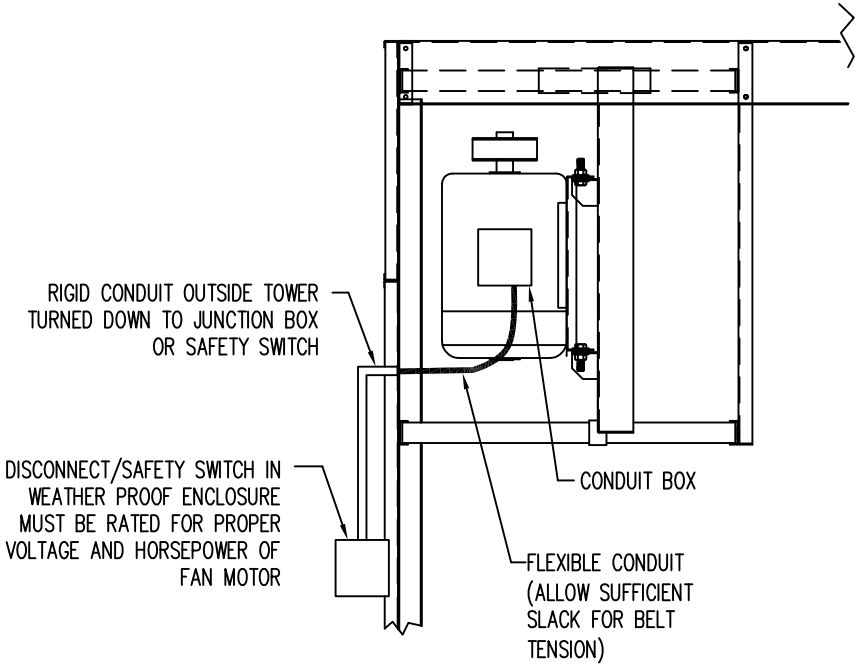

SECTION B-B

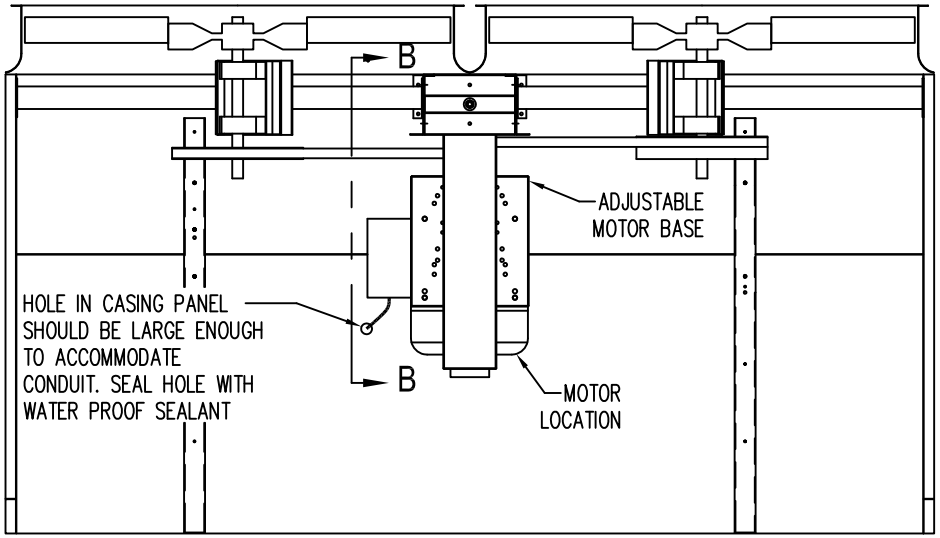

SECTION A-A

Notes

1) All conduit must be water tight and pitched downward to allow condensation to drain away from motor conduit box, therefore, do not run the conduit through the fan deck.

2) All wiring must conform to local and national electrical codes. Junction box/safety switch and all conduit from fan motor conduit box to be sized, provided and installed by others.

3) Rigid conduit outside casing panel must turn down to junction box.

4) On multi-cell units, use seprate conduit lines for each fan motor. Run conduit through adjacent cell to junction box and/or disconnect switch.

ORDER NO: **U150293512**	BALTIMORE AIRCOIL COMPANY	**Motor and Conduit Location** **Dual Fan Standard Fan System**
DATE: **12/2/2014**		DRAWING NUMBER: **ML-U150293512-R1**

2014© Baltimore Aircoil Company. All Rights Reserved.

Data Version 0.00
DWG Version 1.0

Notes
1) All Dimensions are in feet and inches. All weights are in pounds.
2) This drawing is not indicative of the specific configuration of the unit. Please refer to the unit print and other supporting drawings for configuration details.
3) External service platform and ladder ship loose for field assembly.
4) External unit access accessories ship loose for field assembly.
5) Field piping must be kept clear and supported independently of all unit access accessories.
6) Self closing, OSHA-compliant, safety gates are provided for all platform packages. Refer to OSHA and local occupational safety regulations to determine if safety gates are required.
7) Optional ladder extensions are available for all ladder packages.

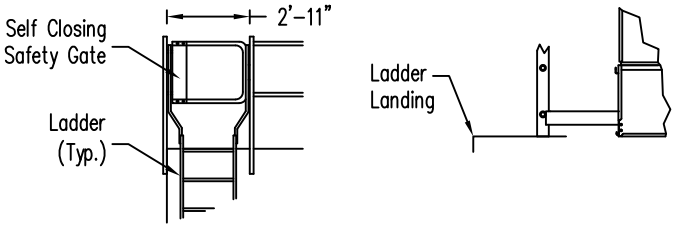

Safety Gate Detail

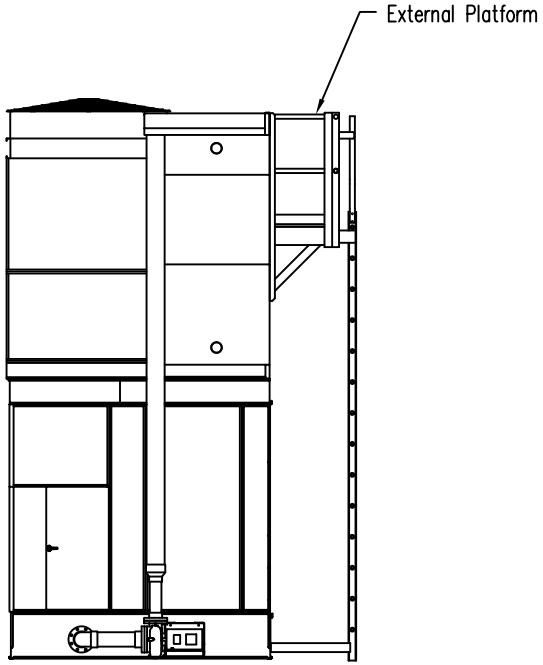

Connection End

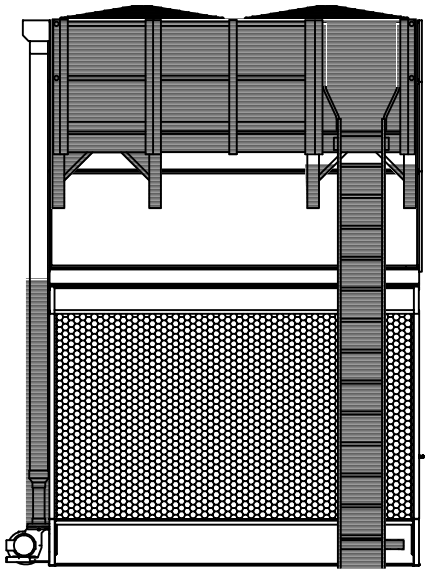

Air Inlet Side

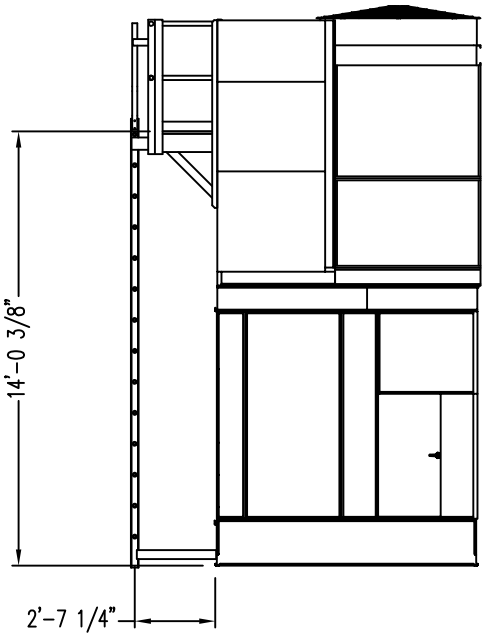

Model Number	Shipping Weight	Operating Weight	Heaviest Section
FXV-0812B-36T-M	13236	20454	9372

ORDER NO: **U150293512**

DATE: **12/2/2014**

BALTIMORE AIRCOIL COMPANY

8.5 X 12 Accessories

DRAWING NUMBER:
EA-U150293512-R1

2014© Baltimore Aircoil Company. All Rights Reserved.

Data Version 0.00
DWG Version 1.0

Notes
1) All Dimensions are in feet and inches. All weights are in pounds.
2) This drawing is not indicative of the specific configuration of the unit. Please refer to the unit print and other supporting drawings for configuration details.
3) Internal Ladder ships loose for field assembly

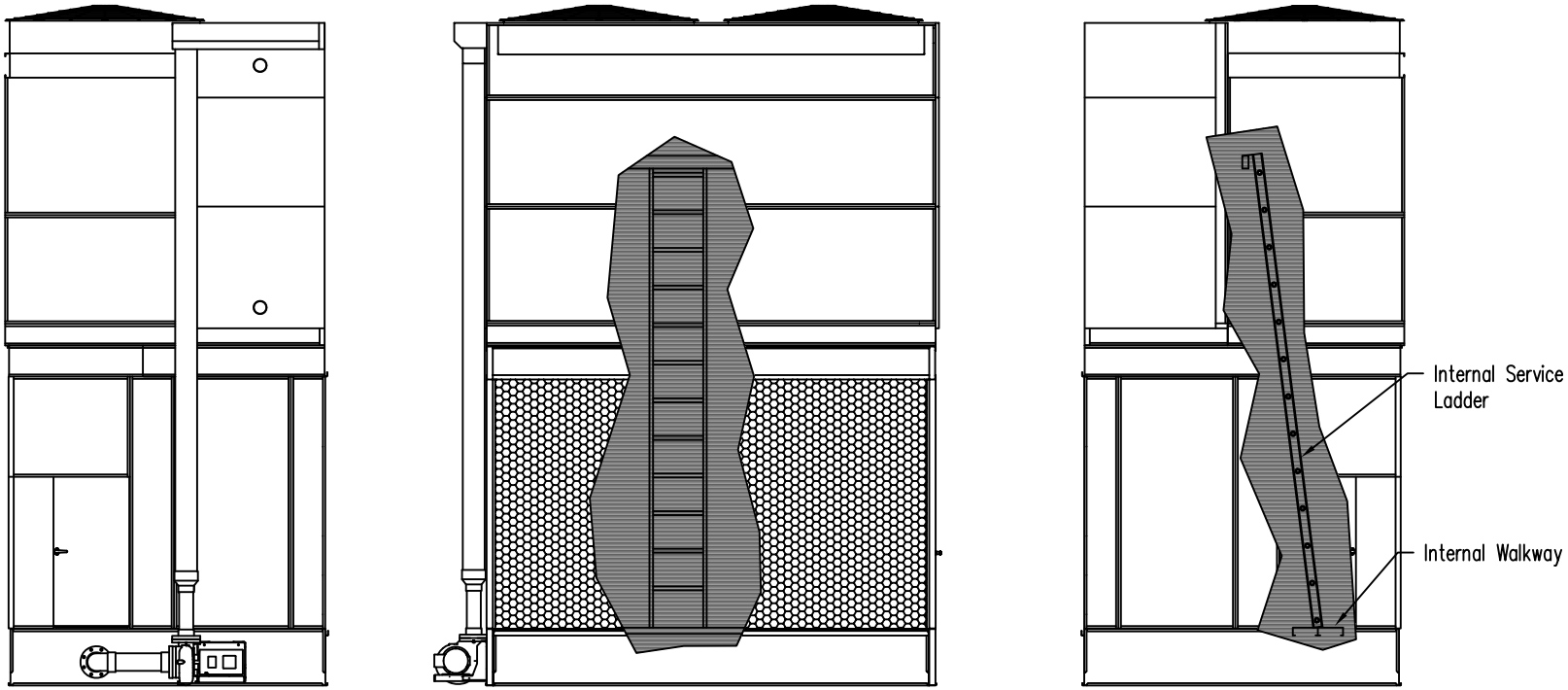

Connection End

Air Inlet Side

Model Number	Shipping Weight	Operating Weight	Heaviest Section
FXV-0812B-36T-M	13236	20454	9372

ORDER NO: **U150293512**

DATE: **12/2/2014**

BALTIMORE AIRCOIL COMPANY

8.5 X 12 Internal Access

DRAWING NUMBER:
IA-U150293512-R1

2000© Baltimore Aircoil Company. All Rights Reserved.

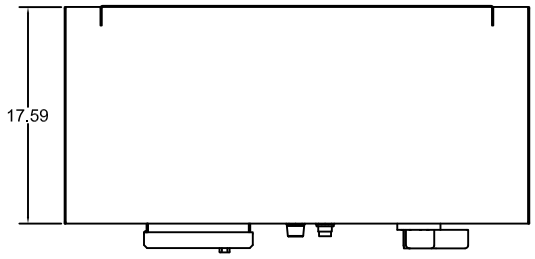

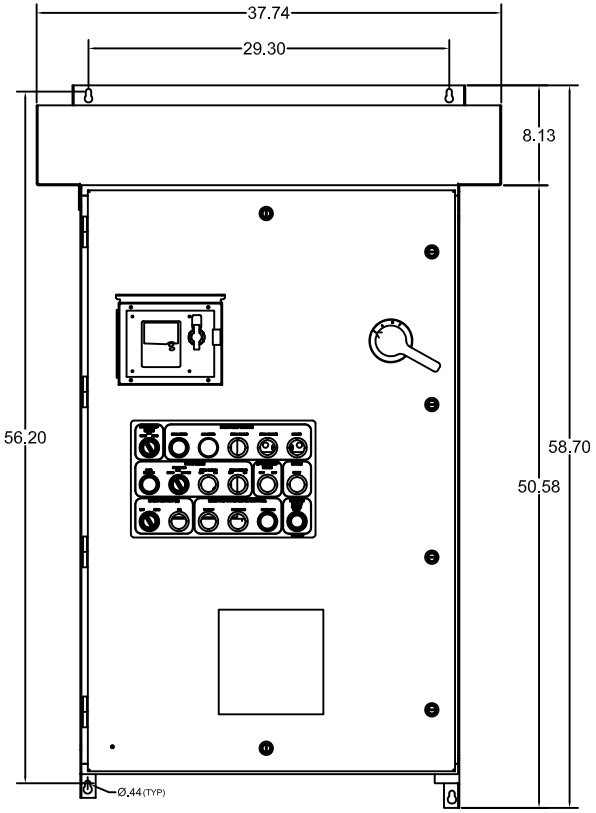

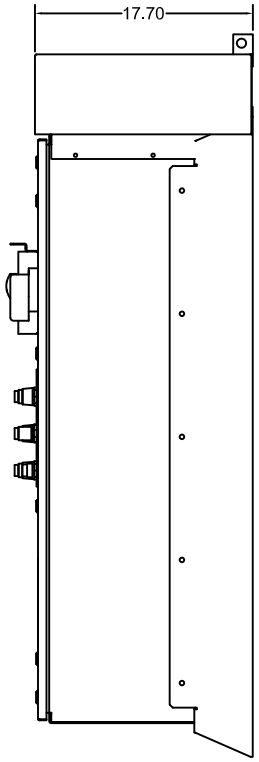

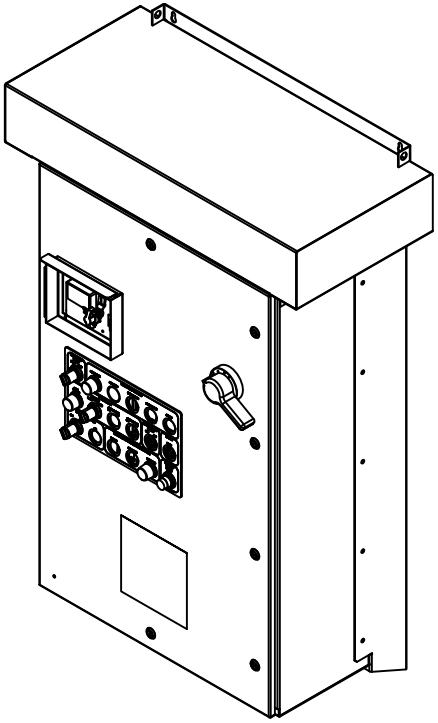

Ref: 84-32612

MOTOR CONTROLS ORDER NO: U150293512	Baltimore Aircoil	DIMENSIONAL FOR EATON COMMON BOX NEMA 3R MILD AND 304 SST STEEL
DATE: 12/2/2014		DRAWING NUMBER: BAC-C50-39189-1 — REV 1

2014© Baltimore Aircoil Company. All Rights Reserved.

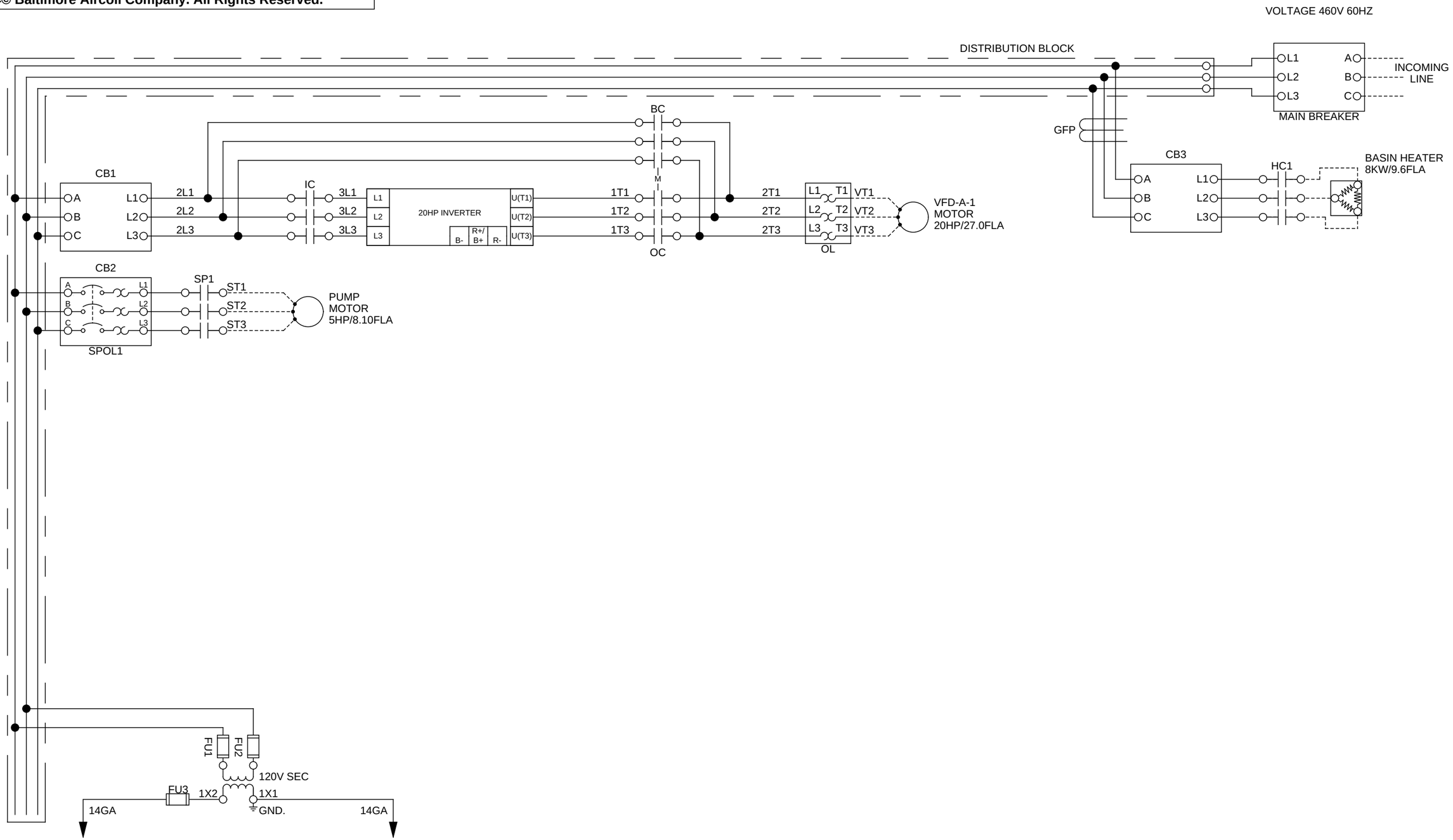

COOLING TOWER CONTROLS

ORDER NO: U1502935-012 **Page 1 of 6**

DATE: 12/02/2014

BALTIMORE AIRCOIL COMPANY

FOR SUBMITTAL PURPOSES ONLY

DRAWING NUMBER: **BACCC-C-V1N-A0A-1-A0A-A0A-0-1J1-1J-A-3-0Z-A-A-B**

REV **1**

2014© Baltimore Aircoil Company. All Rights Reserved.

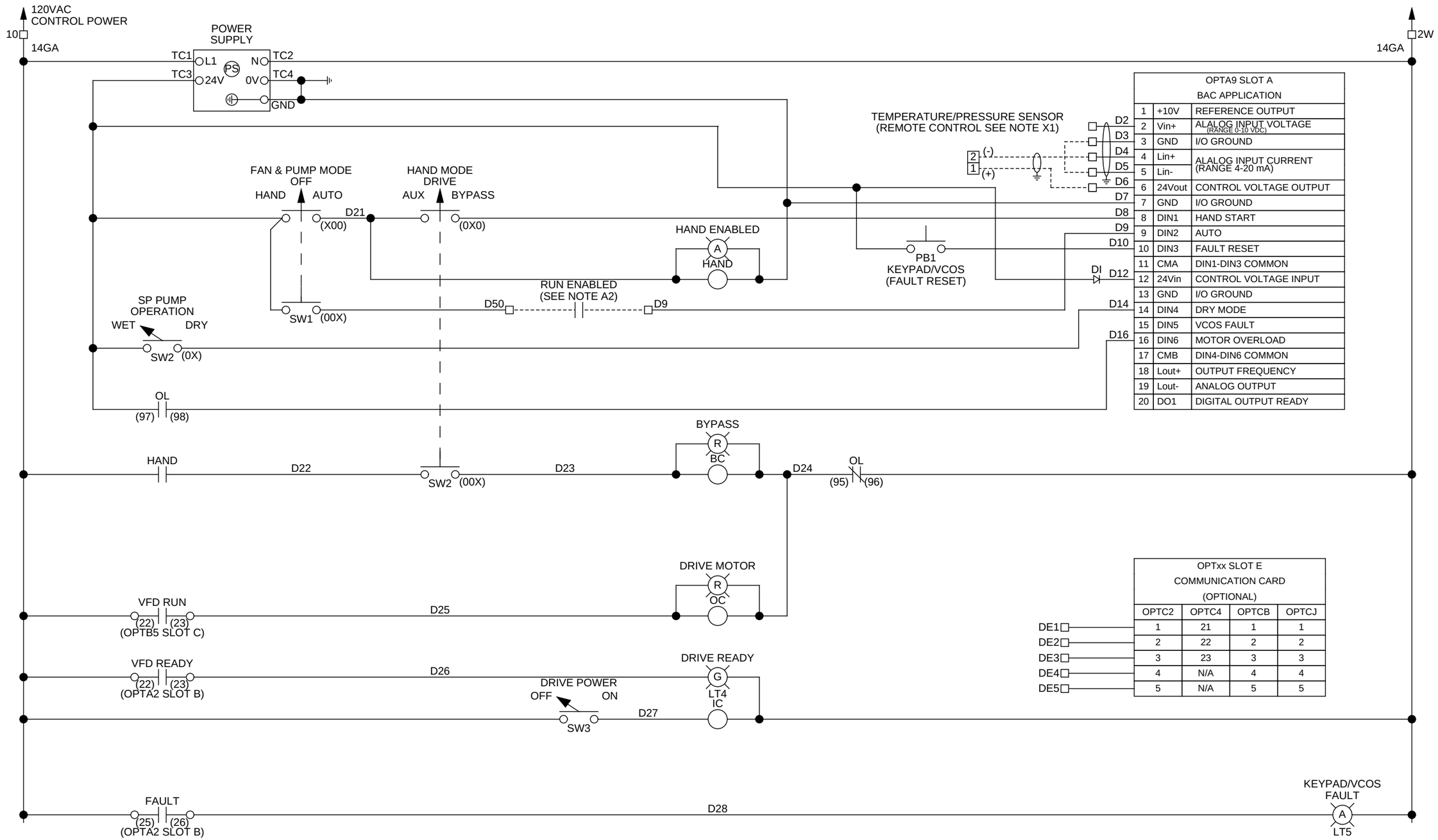

OPTA9 SLOT A BAC APPLICATION		
1	+10V	REFERENCE OUTPUT
2	Vin+	ALALOG INPUT VOLTAGE (RANGE 0-10 VDC)
3	GND	I/O GROUND
4	Lin+	ALALOG INPUT CURRENT (RANGE 4-20 mA)
5	Lin-	
6	24Vout	CONTROL VOLTAGE OUTPUT
7	GND	I/O GROUND
8	DIN1	HAND START
9	DIN2	AUTO
10	DIN3	FAULT RESET
11	CMA	DIN1-DIN3 COMMON
12	24Vin	CONTROL VOLTAGE INPUT
13	GND	I/O GROUND
14	DIN4	DRY MODE
15	DIN5	VCOS FAULT
16	DIN6	MOTOR OVERLOAD
17	CMB	DIN4-DIN6 COMMON
18	Lout+	OUTPUT FREQUENCY
19	Lout-	ANALOG OUTPUT
20	DO1	DIGITAL OUTPUT READY

OPTxx SLOT E COMMUNICATION CARD (OPTIONAL)			
OPTC2	OPTC4	OPTCB	OPTCJ
1	21	1	1
2	22	2	2
3	23	3	3
4	N/A	4	4
5	N/A	5	5

DE1 DE2 DE3 DE4 DE5

COOLING TOWER CONTROLS

ORDER NO: U1502935-012 **Page 2 of 6**

DATE: 12/02/2014

BALTIMORE AIRCOIL COMPANY

FOR SUBMITTAL PURPOSES ONLY

DRAWING NUMBER: **BACCC-C-V1N-A0A-1-A0A-A0A-0-1J1-1J-A-3-0Z-A-A-B**

REV **1**

2014© Baltimore Aircoil Company. All Rights Reserved.

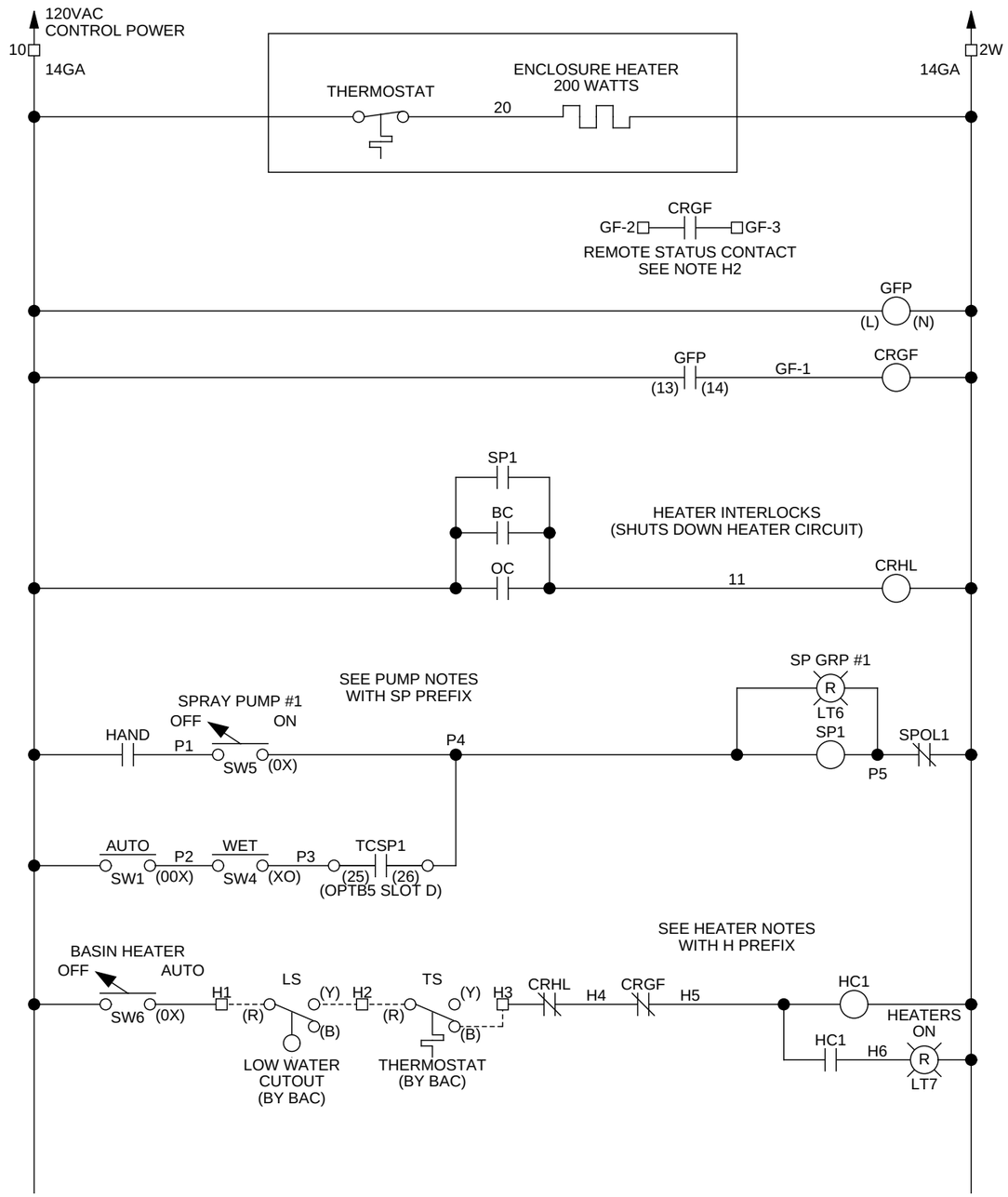

COOLING TOWER CONTROLS

ORDER NO: U1502935-012 **Page 3 of 6**

DATE: 12/02/2014

BALTIMORE AIRCOIL COMPANY

FOR SUBMITTAL PURPOSES ONLY

DRAWING NUMBER: **BACCC-C-V1N-A0A-1-A0A-A0A-0-1J1-1J-A-3-0Z-A-A-B**

REV **1**

2014© Baltimore Aircoil Company. All Rights Reserved.

GENERAL NOTES: ALL CUSTOMER INSTALLED DEVICES (SHOWN WITH DASHED LINES) TO BE UL LISTED DEVICES AND MUST COMPLY WITH APPLICABLE CODES AND ORDINANCES

DANGER - POTENTIAL HIGH VOLTAGE HAZARD

X1 USE ONLY TWISTED SHIELDED CABLE FOR ALL ANALOG SIGNAL WIRING. FOR REMOTE CONTROL APPLICATIONS REMOVE THE JUMPER BETWEEN 3 AND 5 WIRE POSITIVE INTO 4 AND NEGATIVE INTO 5 FOR 4-20MA APPLICATIONS OR WIRE POSITIVE INTO 2 AND NEGATIVE INTO 3 FOR 0-10VDC. FOR SPECIFIC WIRING INSTRUCTIONS SEE ADDITIONAL X1 NOTES.

FOR ADDITIONAL CUSTOMER INPUT WIRING INSTRUCTIONS PLEASE SEE THE DIFFERENT APPLICATIONS BELOW

X1 FOR 4-20mA TEMPERATURE/PRESSURE SENSOR APPLICATIONS
USE CONTROL MODES 0-6

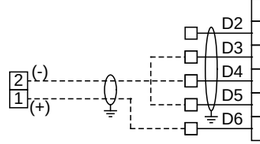

OPTA9 SLOT A BAC APPLICATION		
1	+10V	REFERENCE OUTPUT
2	Vin+	ALALOG INPUT VOLTAGE (RANGE 0-10 VDC)
3	GND	I/O GROUND
4	Lin+	ALALOG INPUT CURRENT (RANGE 4-20 mA)
5	Lin-	
6	24Vout	CONTROL VOLTAGE OUTPUT

X1 FOR 4-20mA CDE REMOTE CONTROL APPLICATIONS
USE CDERMTCNTRL MODE 8

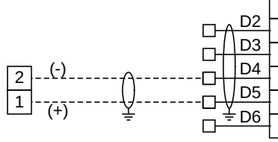

OPTA9 SLOT A BAC APPLICATION		
1	+10V	REFERENCE OUTPUT
2	Vin+	ALALOG INPUT VOLTAGE (RANGE 0-10 VDC)
3	GND	I/O GROUND
4	Lin+	ALALOG INPUT CURRENT (RANGE 4-20 mA)
5	Lin-	
6	24Vout	CONTROL VOLTAGE OUTPUT

X1 FOR 0-10V CDE REMOTE CONTROL APPLICATIONS
USE CDERMTCNTRL MODE 8

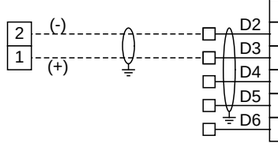

OPTA9 SLOT A BAC APPLICATION		
1	+10V	REFERENCE OUTPUT
2	Vin+	ALALOG INPUT VOLTAGE (RANGE 0-10 VDC)
3	GND	I/O GROUND
4	Lin+	ALALOG INPUT CURRENT (RANGE 4-20 mA)
5	Lin-	
6	24Vout	CONTROL VOLTAGE OUTPUT

A2 REMOTE START INPUT USED FOR ALL APPLICATIONS LISTED ABOVE

RUN ENABLE
(SEE NOTE A2)
D50 ----┤├---- D9

H1 IMMERSION HEATERS SHOULD BE INTERLOCKED WITH CIRCULATING PUMP TO DE-ENERGIZE HEATERS WHEN PUMP IS RUNNING.

H2 A RELAY CONTACT IS PROVIDED FOR REMOTE MONITORING GROUND FAULT STATUS OF BASIN HEATERS. A GROUND FAULT CONDITION WILL DE-ENERGIZE ALL BASIN HEATERS. OPERATOR IS RESPONSIBLE FOR RESETTING THE GROUND FAULT RELAY AFTER ESTABLISHING THAT THE GROUND FAULT HAS BEEN CLEARED. FAILURE TO CLEAR THE GROUND FAULT WILL PREVENT THE BASIN HEATERS FROM PROTECTING THE BASIN WATER FROM FREEZING WHEN THE UNIT IS IDLE.

SP1 A THERMOSTAT INSTALLED IN THE UNIT'S COIL OUTLET PIPING MAY BE USED TO PROVIDE THE SPRAY PUMP START SYSTEM INPUT. THE THERMOSTAT IS TYPICALLY SET AT 5°F BELOW THE FAN OR FAN DAMPER SET POINT. ALSO THERE MIGHT BE A DIFFERENTIAL BETWEEN ON & OFF SETTINGS.

SP2 DUE TO THE INCREASED FAN MOTOR LOADING WHEN A UNIT OPERATES WITHOUT A SPRAY PUMP, THE DRY MODE OPERATION SHOULD ONLY BE USED ON UNITS WHOSE DRIVE SYSTEMS HAVE BEEN SPECIFICALLY DESIGNED FOR SUCH APPLICATIONS.

2014© Baltimore Aircoil Company. All Rights Reserved.

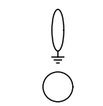

SHIELDED CABLE

COIL MOTOR STARTER OR MANUAL MOTOR PROTECTOR

GROUND PROTECTION RELAY

COIL CONTROL RELAY

COIL TIMING RELAY

TRANSFORMER

FUSE

INDICATING LIGHT

MOMENTARY PUSHBUTTON

SELECTOR SWITCH

THERMOSTAT

FLOAT SWITCH

SOLENOID VALVE

DELAY ON NORMALLY OPEN TIMING CONTACT

DELAY OFF NORMALLY CLOSED TIMING CONTACT

DRY CONTACT

LIMIT SWITCH

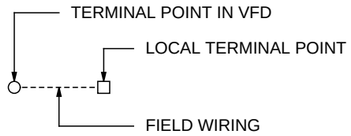

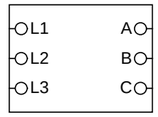

CIRCUIT BREAKER

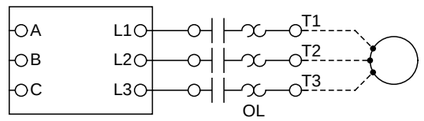

COMBINATION CIRCUIT BREAKER MOTOR STARTER WITH OVERLOAD

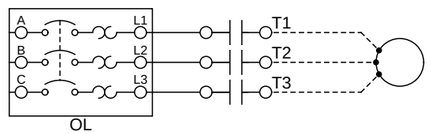

COMBINATION MANUAL MOTOR CONTROLLER/CONTACTOR INTEGRAL OVERLOAD

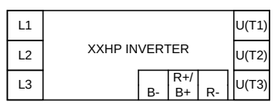

VARIABLE FREQUENCY DRIVE

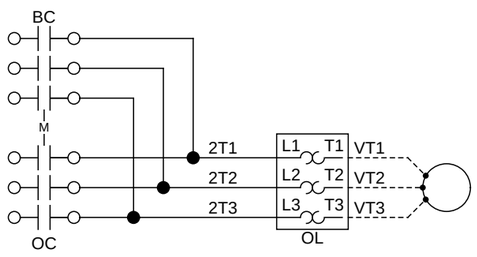

VARIABLE FREQUENCY DRIVE BYPASS CONTACTORS

BASIN HEATER

GROUND PROTECTION SENSOR

VFD NOTES

1. ENCLOSURE AND MOTOR(S) MUST BE GROUNDED. SEE INSTRUCTION MANUAL
2. AUX CONTACTS RATED 10 AMPS AT 600 VAC
3. REFER TO VIBRATION CUTOUT SWITCH DRAWING IN BAC SUBMITTAL PACKAGE FOR FIELD WIRING
4. FOR MORE DETAILED INFORMATION, VISIT BALTIMOTREAIRCOIL.COM
5. NOTE: COMMUNICATION CARDS CAN BE SUPPLIED WITH THE DRIVE OR FIELD OPTION. REFERENCE USER MANUAL AND OPTION CARD MANUAL
6. 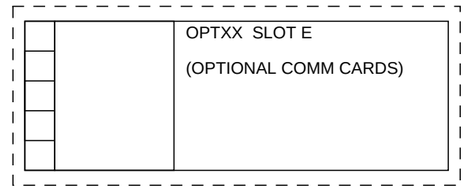

COIL/RELAY TERMINOLOGY
(SOME ARE OPTIONAL)

IC	VFD INPUT CONTACTOR	CRP1	COIL RELAY FOR PCD
OC	VFD OUTPUT CONTACTOR	CRP2	PCD RELAY ENABLE FAN&PUMP MODE
BC	VFD BYPASS CONTACTOR	GFP	GROUND FAULT INTERPOSING RELAY
AUX	AUXILLARY STARTER		
SP1	SPRAY PUMP #1 CONTACT	CRGF	GROUND FAULT RELAY COIL
SP2	SPRAY PUMP #2 CONTACT	CRHL	HEATER CIRCUIT SHUTDOWN INTERLOCK
HC1	BASIN HEATER COIL #1	PR1	VCOS PULSE RELAY
HC2	BASIN HEATER COIL #2		
CRV1	VCOS COIL FOR FAN&PUMP RUN ENABLE		
HAND	FAN&PUMP HAND MODE		
TDR1	AUX->VFD/BYPASS		
DRIVE READY	VFD READY MODE		
DRIVE POWER	SWITCH TO POWER I-CONTACTOR		
TCPD	VFD OUTPUT FOR PCD ENABLE		
TCSP	VFD OUTPUT FOR SPRAY PUMP ENABLE		

COOLING TOWER CONTROLS

ORDER NO: U1502935-012 **Page 5 of 6**

DATE: 12/02/2014

BALTIMORE AIRCOIL COMPANY

FOR SUBMITTAL PURPOSES ONLY

DRAWING NUMBER: **BACCC-C-V1N-A0A-1-A0A-A0A-0-1J1-1J-A-3-0Z-A-A-B**

REV **1**

2014© Baltimore Aircoil Company. All Rights Reserved.

24Vdc

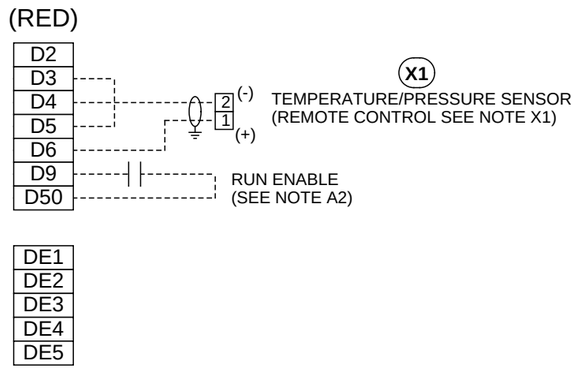

460Vac

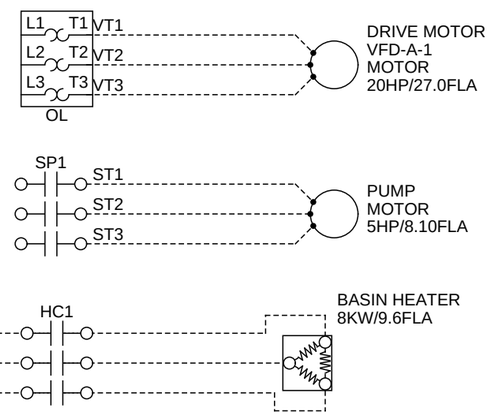

120Vac

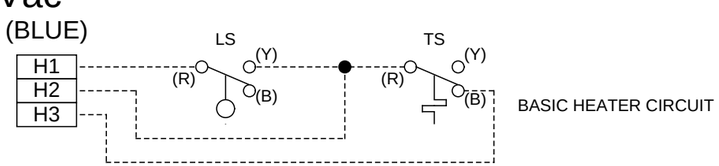

IMPORTANT!!
NOT ALL CIRCUITS MAY HAVE BEEN INCLUDED ON THIS PAGE. PLEASE DOUBLE CHECK PREVIOUS PAGES FOR ADDITIONAL FIELD WIRING

GENERATED WITH VERSION 1.5.5

COOLING TOWER CONTROLS

ORDER NO: U1502935-012 **Page 6 of 6**

DATE: 12/02/2014

BALTIMORE AIRCOIL COMPANY

FOR SUBMITTAL PURPOSES ONLY

DRAWING NUMBER: **BACCC-C-V1N-A0A-1-A0A-A0A-0-1J1-1J-A-3-0Z-A-A-B**

REV **1**

2000© Baltimore Aircoil Company. All Rights Reserved.

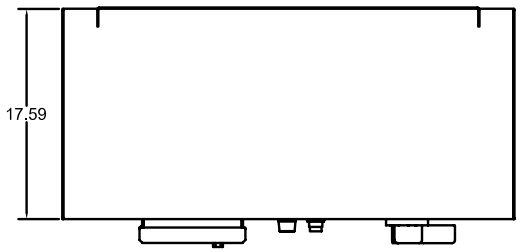

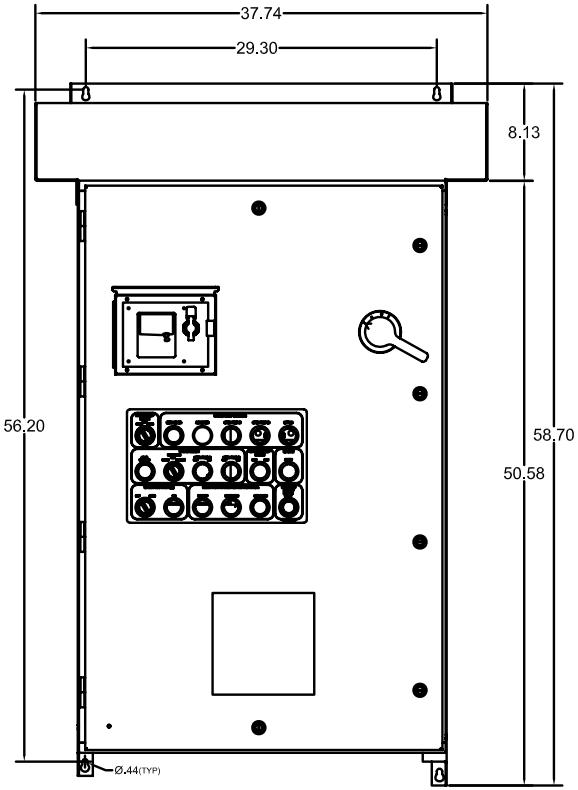

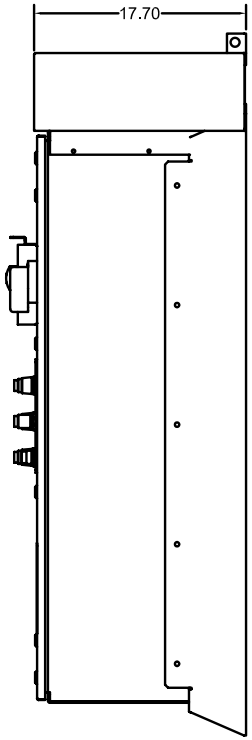

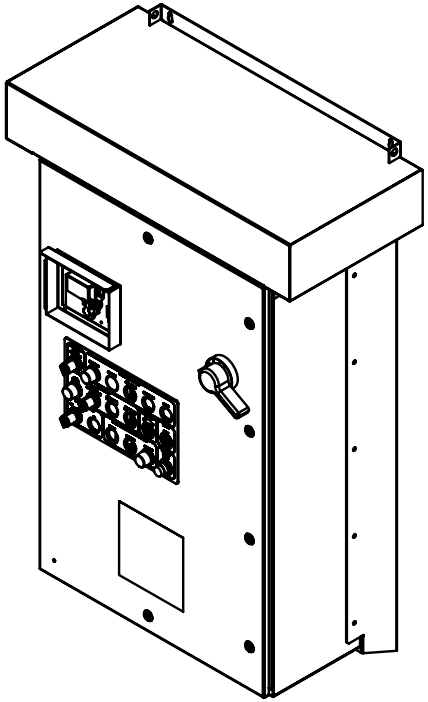

Ref: 84-32612

MOTOR CONTROLS ORDER NO:	Baltimore Aircoil	DIMENSIONAL FOR EATON COMMON BOX NEMA 3R MILD AND 304 SST STEEL
DATE:		DRAWING NUMBER: BAC-C50-39189-1 — REV 1

REQUIRED FIELD CONNECTION

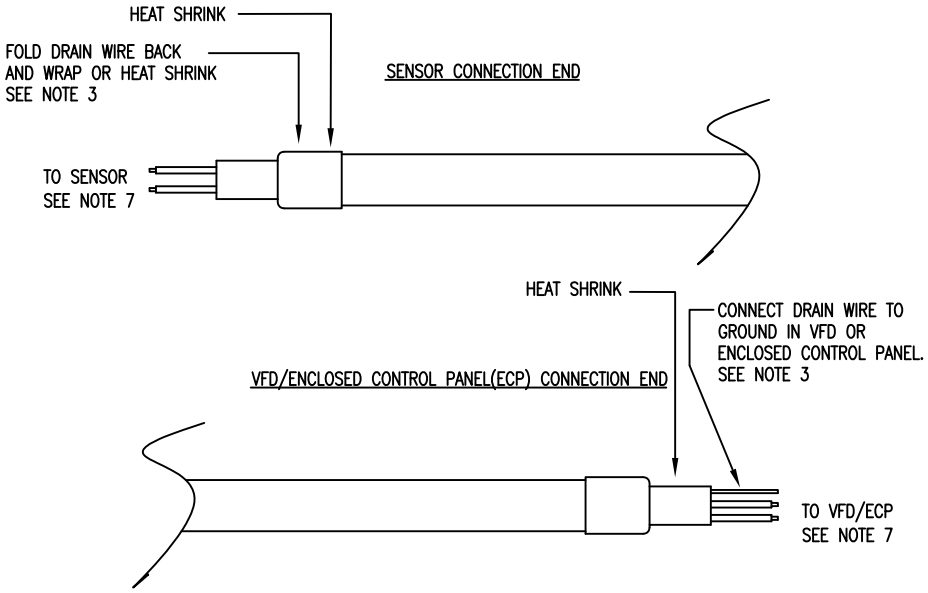

NOTES:

1. DEFAULT SENSOR RANGE: 0–200°F/4–20mA 10–30VDC LOOP POWERED TRANSDUCER.
2. USE ONLY TWISTED SHIELDED CABLE FOR SENSOR WIRING.
3. GROUND SIGNAL CABLE DRAIN WIRE AT VFD OR ENCLOSED CONTROL CONNECTION END ONLY. GROUNDING CABLE AT BOTH ENDS COULD CREATE A GROUND LOOP CAUSING A SIGNAL ERROR.
4. FOLLOW NATIONAL ELECTRICAL CODE AND LOCAL CODES FOR INSTALLTION AND WIRING OF TEMPERATURE SENSOR.
5. DO NOT ROUTE TEMPERATURE SENSOR CABLE WITH WIRES CARRYING MORE THAN 150V IN VFD OR ENCLOSED CONTROL PANELS.
6. INSTALL SENSOR IN LEAVING WATER OR FLUID PIPING WITH TEMPERATURE SENSITIVE ZONE LOCATED IN THE MIDDLE OF FLOW STREAM.
7. ALL FIELD WIRING BY OTHERS.
8. STAINLESS STEEL THERMOWELL CAN BE INSERTED DIRECTLY INTO THE FLUID STREAM. THE SENSING PROBE MAY BE REMOVED WITHOUT BREAKING THE FLUID SEAL.

OPTIONAL BAC FACTORY TEMPERATURE SENSOR

FACTORY CALIBRATED 0–200°F TEMPERATURE RANGE
4–20mA, LOOP POWERED OUTPUT
10–30VDC POWER SUPPLY
SENSOR BAC PART NUMBER IS 312073.

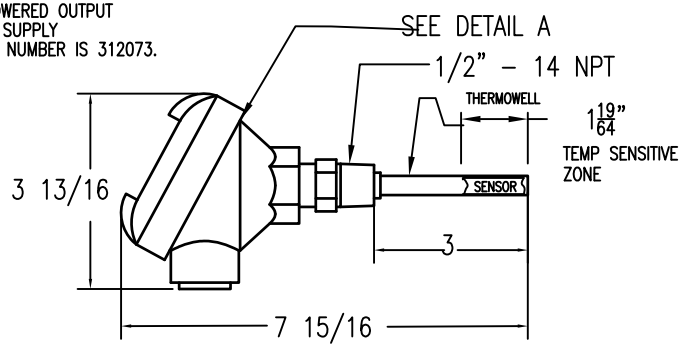

DETAIL A – TEMPERATURE TRANSMITTER

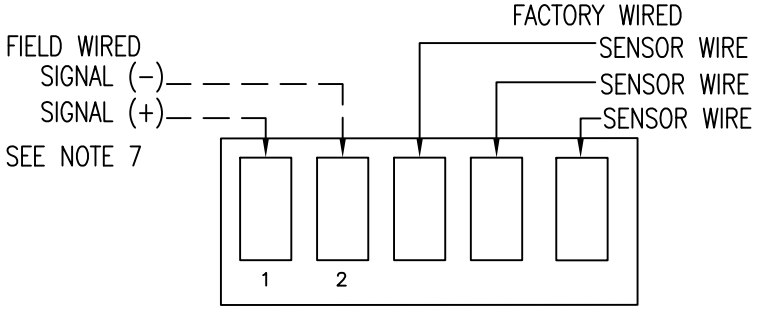

ORDER NO: U150293512	Baltimore Aircoil	TEMPERATURE SENSOR INSTALLATION AND FIELD CONNECTION DRAWING
DATE: 12/2/2014		DRAWING NUMBER: BAC-12623 — D

APPENDIX M – HEAT EXTRACTION DATA

APPENDIX M – HEAT EXTRACTION DATA

HEAT EXTRACTION FLOWMETER READINGS

Heat Extraction Flowmeter Readings

Bridgeton Landfill

10/14/2014 to 12/31/2014

Date	Time	Flow (GPM)	Notes

Flowmeter: GIW-02

10/14/2014	2:40 PM	7.07	
10/14/2014	5:45 PM	4.85	
10/15/2014	8:20 AM	4.54	
10/15/2014	1:25 PM	6.50	
10/16/2014	2:25 PM	8.48	
10/17/2014	1:05 PM	7.90	
10/18/2014	2:40 PM	7.00	
10/19/2014	8:04 AM	0.00	
10/19/2014	12:20 PM	0.00	
10/20/2014	2:35 PM	0.00	
10/21/2014	10:30 AM	0.00	
10/22/2014	9:30 AM	0.00	
10/23/2014	4:50 PM	0.00	
10/24/2014	11:05 AM	10.14	
10/24/2014	1:00 PM	10.43	
10/24/2014	4:50 PM	10.31	
10/25/2014	9:01 AM	7.00	
10/25/2014	1:00 PM	6.42	
10/25/2014	5:25 PM	5.76	
10/26/2014	9:20 AM	5.13	
10/26/2014	1:15 PM	4.87	
10/26/2014	5:15 PM	4.85	
10/27/2014	9:00 AM	4.96	
10/27/2014	1:00 PM	10.96	
10/27/2014	5:10 PM	13.08	
10/28/2014	9:00 AM	10.24	
10/28/2014	1:00 PM	10.41	
10/28/2014	4:45 PM	10.23	
10/29/2014	7:00 AM	10.28	
10/29/2014	10:10 AM	10.47	
10/29/2014	1:10 PM	9.82	
10/29/2014	4:45 PM	11.08	
10/30/2014	7:00 AM	11.08	
10/30/2014	9:00 AM	11.00	

Notes:
- *Reading time signifies the start of monitoring the entire heat extraction system*
- *See "Notes on Heat Extraction System Readings" for comments on reading events*

Date	Time	Flow (GPM)	Notes

Flowmeter: GIW-02

10/30/2014	1:00 PM	11.08	
10/30/2014	4:30 PM	11.02	
10/31/2014	5:00 AM	10.97	
10/31/2014	9:00 AM	10.90	
10/31/2014	1:00 PM	10.71	
10/31/2014	4:30 PM	10.78	
11/1/2014	5:15 AM	10.58	
11/1/2014	4:50 PM	10.34	
11/2/2014	4:45 AM	10.28	
11/2/2014	9:15 AM	10.12	
11/3/2014	5:00 AM	10.32	
11/3/2014	9:00 AM	10.25	
11/3/2014	1:00 PM	10.17	
11/3/2014	4:45 PM	10.10	
11/4/2014	5:00 AM	10.28	
11/4/2014	9:20 AM	10.38	
11/4/2014	1:00 PM	10.52	
11/4/2014	4:30 PM	10.52	
11/5/2014	5:05 AM	10.60	
11/5/2014	9:10 AM	10.62	
11/5/2014	12:50 PM	10.64	
11/5/2014	4:30 PM	10.62	
11/6/2014	9:10 AM	10.64	
11/6/2014	1:05 PM	10.53	
11/6/2014	4:40 PM	11.04	
11/7/2014	9:10 AM	8.24	
11/7/2014	1:10 PM	8.54	
11/8/2014	6:30 AM	8.53	
11/8/2014	12:30 PM	8.54	
11/8/2014	12:30 PM	8.08	
11/9/2014	7:42 AM	8.50	
11/10/2014	5:00 AM	8.33	
11/10/2014	9:00 AM	8.39	
11/10/2014	12:50 PM	8.22	
11/11/2014	5:00 AM	8.00	
11/11/2014	9:15 AM	7.98	
11/11/2014	1:15 PM	7.88	

Notes:
- *Reading time signifies the start of monitoring the entire heat extraction system*
- *See "Notes on Heat Extraction System Readings" for comments on reading events*

Date	Time	Flow (GPM)	Notes

Flowmeter: GIW-02

11/11/2014	4:45 PM	7.78	
11/12/2014	5:00 AM	7.57	
11/12/2014	9:00 AM	7.38	
11/12/2014	1:30 PM	8.18	
11/12/2014	4:45 PM	8.54	
11/13/2014	4:50 AM	8.44	
11/13/2014	9:28 AM	8.48	
11/13/2014	1:00 PM	8.56	
11/13/2014	4:50 PM	8.52	
11/14/2014	5:10 AM	8.42	
11/14/2014	9:10 AM	8.37	
11/14/2014	1:00 PM	8.48	
11/15/2014	8:50 AM	10.12	
11/16/2014	5:00 AM	9.80	
11/16/2014	9:00 AM	9.78	
11/17/2014	4:50 AM	8.85	
11/17/2014	9:15 AM	8.69	
11/17/2014	1:20 PM	10.50	
11/17/2014	4:30 PM	10.54	
11/18/2014	5:00 AM	10.52	
11/18/2014	9:10 AM	10.52	
11/18/2014	1:00 PM	10.54	
11/18/2014	4:40 PM	10.47	
11/19/2014	5:00 AM	10.38	
11/19/2014	9:00 AM	10.43	
11/19/2014	1:15 PM	10.30	
11/19/2014	4:45 PM	10.28	
11/20/2014	6:00 AM	10.12	
11/20/2014	9:25 AM	10.10	
11/20/2014	1:00 PM	10.00	
11/20/2014	4:50 PM	10.00	
11/21/2014	6:10 AM	9.98	
11/21/2014	9:00 AM	9.93	
11/21/2014	2:40 PM	9.78	
11/22/2014		9.82	
11/24/2014	10:40 AM	10.41	
11/24/2014	1:20 PM	10.52	

Notes:
- *Reading time signifies the start of monitoring the entire heat extraction system*
- *See "Notes on Heat Extraction System Readings" for comments on reading events*

Date	Time	Flow (GPM)	Notes

Flowmeter: GIW-02

11/25/2014	5:00 AM	10.45	
11/25/2014	9:00 AM	10.50	
11/25/2014	1:00 PM	10.47	
11/25/2014	4:30 PM	10.19	
11/26/2014	4:50 AM	10.41	
11/26/2014	9:00 AM	10.43	
11/26/2014	1:00 PM	10.43	
11/27/2014	5:00 AM	10.38	
11/27/2014	9:00 AM	10.34	
11/27/2014	1:00 PM	10.32	
11/28/2014	5:00 AM	10.28	
11/28/2014	9:00 AM	10.24	
11/29/2014	9:00 AM	8.39	
11/29/2014	4:50 PM	8.39	
11/30/2014	8:50 AM	7.78	
11/30/2014	12:50 PM	7.50	
12/1/2014	5:20 AM	4.22	
12/1/2014	9:00 AM	4.28	
12/1/2014	12:50 PM	9.88	
12/1/2014	5:00 PM	10.47	
12/2/2014	5:10 AM	10.43	
12/2/2014	9:15 AM	10.45	
12/2/2014	1:15 PM	10.47	
12/2/2014	4:50 PM	10.47	
12/3/2014	5:05 AM	10.47	
12/3/2014	9:00 AM	10.43	
12/3/2014	12:45 PM	10.43	
12/3/2014	5:00 PM	10.41	
12/4/2014	9:00 AM	10.41	
12/4/2014	1:10 PM	10.41	
12/4/2014	5:00 PM	10.38	
12/5/2014	5:05 AM	10.35	
12/5/2014	9:00 AM	10.34	
12/6/2014		10.28	
12/8/2014	5:00 AM	10.12	
12/8/2014	9:00 AM	10.10	
12/8/2014	1:30 PM	10.06	

Notes:
- *Reading time signifies the start of monitoring the entire heat extraction system*
- *See "Notes on Heat Extraction System Readings" for comments on reading events*

Date	Time	Flow (GPM)	Notes

Flowmeter: GIW-02

12/8/2014	5:00 PM	10.04	
12/9/2014	5:00 AM	9.99	
12/9/2014	9:00 AM	9.84	
12/9/2014	1:15 PM	9.82	
12/9/2014	5:25 PM	9.78	
12/10/2014	4:30 AM	9.62	
12/10/2014	5:30 AM	9.74	
12/10/2014	9:15 AM	9.74	
12/10/2014	1:15 PM	9.72	
12/10/2014	4:30 PM	9.62	
12/11/2014	5:00 AM	9.52	
12/11/2014	9:00 AM	9.48	
12/11/2014	1:00 PM	9.34	
12/11/2014	5:00 PM	9.32	
12/12/2014	5:00 AM	9.28	
12/12/2014	9:00 AM	9.22	
12/12/2014	1:00 PM	9.20	
12/12/2014	5:20 PM	9.15	
12/13/2014	9:00 AM	0.00	
12/14/2014	1:00 PM	10.41	
12/15/2014	5:00 AM	10.43	
12/15/2014	9:00 AM	10.43	
12/15/2014	1:00 PM	10.43	
12/15/2014	4:50 PM	10.41	
12/16/2014	4:50 AM	10.45	
12/16/2014	9:05 AM	10.49	
12/16/2014	1:30 PM	10.49	
12/16/2014	4:35 PM	10.47	
12/17/2014	8:15 AM	10.47	
12/17/2014	1:30 PM	10.43	
12/17/2014	5:00 PM	10.43	
12/18/2014	5:20 AM	10.43	
12/18/2014	9:30 AM	10.40	
12/18/2014	1:10 PM	10.40	
12/18/2014	5:00 PM	10.41	
12/19/2014	5:00 AM	10.38	
12/19/2014	8:55 AM	10.38	

Notes:
- *Reading time signifies the start of monitoring the entire heat extraction system*
- *See "Notes on Heat Extraction System Readings" for comments on reading events*

Date	Time	Flow (GPM)	Notes

Flowmeter: GIW-02

12/19/2014	12:55 PM	10.38	
12/19/2014	5:00 PM	10.41	
12/20/2014	2:50 PM	10.36	
12/21/2014	10:30 AM	10.38	
12/22/2014	5:10 AM	10.38	
12/22/2014	9:00 AM	10.32	
12/22/2014	1:00 PM	10.38	
12/22/2014	4:50 PM	10.36	
12/23/2014	5:15 AM	10.38	
12/23/2014	9:05 AM	10.38	
12/23/2014	1:00 PM	10.38	
12/24/2014	9:20 AM	10.34	
12/24/2014	12:20 PM	10.34	
12/24/2014	3:20 PM	10.36	
12/26/2014	9:00 AM	10.28	
12/26/2014	2:00 PM	10.28	
12/29/2014	5:40 AM	10.19	
12/29/2014	9:00 AM	10.17	
12/29/2014	1:00 PM	10.14	
12/30/2014	5:15 AM	10.08	
12/30/2014	9:00 AM	10.08	
12/30/2014	1:00 PM	10.04	
12/31/2014	5:25 AM	9.69	
12/31/2014	9:00 AM	9.54	
12/31/2014	1:00 PM	10.58	
207 readings		Average: 9.31	

Flowmeter: GIW-03

10/14/2014	2:40 PM	3.22	
10/14/2014	5:45 PM	4.30	
10/15/2014	8:20 AM	4.98	
10/15/2014	1:25 PM	6.96	
10/16/2014	2:25 PM	8.28	
10/17/2014	1:05 PM	6.50	
10/18/2014	2:40 PM	7.80	
10/19/2014	8:04 AM	0.00	

Notes:
- *Reading time signifies the start of monitoring the entire heat extraction system*
- *See "Notes on Heat Extraction System Readings" for comments on reading events*

Date	Time	Flow (GPM)	Notes
Flowmeter: GIW-03			
10/19/2014	12:20 PM	0.00	
10/20/2014	2:35 PM	0.00	
10/21/2014	10:30 AM	0.00	
10/22/2014	9:30 AM	0.00	
10/23/2014	4:50 PM	0.00	
10/24/2014	11:05 AM	10.44	
10/24/2014	1:00 PM	10.10	
10/24/2014	4:50 PM	10.17	
10/25/2014	9:01 AM	5.88	
10/25/2014	1:00 PM	5.09	
10/25/2014	5:25 PM	4.14	
10/26/2014	9:20 AM	2.91	
10/26/2014	1:15 PM	2.43	
10/26/2014	5:15 PM	2.41	
10/27/2014	9:00 AM	2.66	
10/27/2014	1:00 PM	10.26	
10/27/2014	5:10 PM	10.34	
10/28/2014	9:00 AM	10.44	
10/28/2014	1:00 PM	10.66	
10/28/2014	4:45 PM	10.52	
10/29/2014	7:00 AM	10.60	
10/29/2014	10:10 AM	10.82	
10/29/2014	1:10 PM	9.64	
10/29/2014	4:45 PM	11.00	
10/30/2014	7:00 AM	11.02	
10/30/2014	9:00 AM	11.02	
10/30/2014	1:00 PM	10.98	
10/30/2014	4:30 PM	11.00	
10/31/2014	5:00 AM	10.38	
10/31/2014	9:00 AM	10.85	
10/31/2014	1:00 PM	10.74	
10/31/2014	4:30 PM	10.94	
11/1/2014	5:15 AM	10.80	
11/1/2014	4:50 PM	10.58	
11/2/2014	4:45 AM	10.32	
11/2/2014	9:15 AM	10.14	
11/3/2014	5:00 AM	10.28	

Notes:
- *Reading time signifies the start of monitoring the entire heat extraction system*
- *See "Notes on Heat Extraction System Readings" for comments on reading events*

Date	Time	Flow (GPM)	Notes
Flowmeter: GIW-03			
11/3/2014	9:00 AM	10.30	
11/3/2014	1:00 PM	10.23	
11/3/2014	4:45 PM	10.24	
11/4/2014	5:00 AM	10.44	
11/4/2014	9:20 AM	10.54	
11/4/2014	1:00 PM	10.56	
11/4/2014	4:30 PM	10.63	
11/5/2014	5:05 AM	10.74	
11/5/2014	9:10 AM	10.76	
11/5/2014	12:50 PM	10.74	
11/5/2014	4:30 PM	10.78	
11/6/2014	9:10 AM	10.76	
11/6/2014	1:05 PM	10.52	
11/6/2014	4:40 PM	11.02	
11/7/2014	9:10 AM	8.24	
11/7/2014	1:10 PM	8.16	
11/8/2014	6:30 AM	8.09	
11/9/2014	7:42 AM	8.06	
11/10/2014	5:00 AM	7.92	
11/10/2014	9:00 AM	7.87	
11/10/2014	12:50 PM	7.74	
11/11/2014	5:00 AM	7.54	
11/11/2014	9:15 AM	7.42	
11/11/2014	1:15 PM	7.37	
11/11/2014	4:45 PM	7.26	
11/12/2014	5:00 AM	7.10	
11/12/2014	9:00 AM	6.89	
11/12/2014	1:30 PM	7.96	
11/12/2014	4:45 PM	8.38	
11/13/2014	4:50 AM	8.28	
11/13/2014	9:28 AM	8.24	
11/13/2014	1:00 PM	8.38	
11/13/2014	4:50 PM	8.40	
11/14/2014	5:10 AM	8.22	
11/14/2014	9:10 AM	8.18	
11/14/2014	1:00 PM	8.04	
11/15/2014	8:50 AM	12.01	

Notes:
- *Reading time signifies the start of monitoring the entire heat extraction system*
- *See "Notes on Heat Extraction System Readings" for comments on reading events*

Date	Time	Flow (GPM)	Notes
Flowmeter: GIW-03			
11/16/2014	5:00 AM	11.53	
11/16/2014	9:00 AM	11.60	
11/17/2014	4:50 AM	10.41	
11/17/2014	9:15 AM	10.08	
11/17/2014	1:20 PM	12.43	
11/17/2014	4:30 PM	12.45	
11/18/2014	5:00 AM	12.36	
11/18/2014	9:10 AM	12.36	
11/18/2014	1:00 PM	12.41	
11/18/2014	4:40 PM	12.38	
11/19/2014	5:00 AM	12.28	
11/19/2014	9:00 AM	12.24	
11/19/2014	1:15 PM	12.19	
11/19/2014	4:45 PM	12.12	
11/20/2014	6:00 AM	11.92	
11/20/2014	9:25 AM	11.84	
11/20/2014	1:00 PM	11.88	
11/20/2014	4:50 PM	11.80	
11/21/2014	6:10 AM	11.70	
11/21/2014	9:00 AM	11.70	
11/21/2014	2:40 PM	11.88	
11/24/2014	10:40 AM	12.24	
11/24/2014	1:20 PM	12.45	
11/25/2014	5:00 AM	12.36	
11/25/2014	9:00 AM	12.41	
11/25/2014	1:00 PM	12.48	
11/25/2014	4:30 PM	12.50	
11/26/2014	4:50 AM	12.38	
11/26/2014	9:00 AM	12.41	
11/26/2014	1:00 PM	12.36	
11/27/2014	5:00 AM	12.43	
11/27/2014	9:00 AM	12.45	
11/27/2014	1:00 PM	12.41	
11/28/2014	5:00 AM	12.32	
11/28/2014	9:00 AM	12.32	
11/29/2014	9:00 AM	9.82	
11/29/2014	4:50 PM	9.73	

Notes:
- *Reading time signifies the start of monitoring the entire heat extraction system*
- *See "Notes on Heat Extraction System Readings" for comments on reading events*

Date	Time	Flow (GPM)	Notes
Flowmeter: GIW-03			
11/30/2014	8:50 AM	8.96	
11/30/2014	12:50 PM	8.68	
12/1/2014	5:20 AM	3.84	
12/1/2014	9:00 AM	3.86	
12/1/2014	12:50 PM	11.80	
12/1/2014	5:00 PM	12.61	
12/2/2014	5:10 AM	12.45	
12/2/2014	9:15 AM	12.54	
12/2/2014	1:15 PM	12.58	
12/2/2014	4:50 PM	12.58	
12/3/2014	5:05 AM	12.58	
12/3/2014	9:00 AM	12.54	
12/3/2014	12:45 PM	12.52	
12/3/2014	5:00 PM	12.50	
12/4/2014	9:00 AM	12.52	
12/4/2014	1:10 PM	12.50	
12/4/2014	5:00 PM	12.49	
12/5/2014	5:05 AM	12.16	
12/5/2014	9:00 AM	12.41	
12/6/2014		12.34	
12/8/2014	5:00 AM	12.17	
12/8/2014	9:00 AM	12.14	
12/8/2014	1:30 PM	12.10	
12/8/2014	5:00 PM	12.06	
12/9/2014	5:00 AM	11.99	
12/9/2014	9:00 AM	11.86	
12/9/2014	1:15 PM	11.84	
12/9/2014	5:25 PM	11.80	
12/10/2014	4:30 AM	11.68	
12/10/2014	5:30 AM	11.78	
12/10/2014	9:15 AM	11.78	
12/10/2014	1:15 PM	11.75	
12/10/2014	4:30 PM	11.68	
12/11/2014	5:00 AM	11.60	
12/11/2014	9:00 AM	11.53	
12/11/2014	1:00 PM	11.38	
12/11/2014	5:00 PM	11.36	

Notes:
- *Reading time signifies the start of monitoring the entire heat extraction system*
- *See "Notes on Heat Extraction System Readings" for comments on reading events*

Date	Time	Flow (GPM)	Notes
Flowmeter: GIW-03			
12/12/2014	5:00 AM	11.26	
12/12/2014	9:00 AM	11.22	
12/12/2014	1:00 PM	11.16	
12/12/2014	5:20 PM	11.07	
12/13/2014	9:00 AM	10.60	
12/14/2014	1:00 PM	12.50	
12/15/2014	5:00 AM	12.54	
12/15/2014	9:00 AM	12.54	
12/15/2014	1:00 PM	12.54	
12/15/2014	4:50 PM	12.54	
12/16/2014	4:50 AM	12.61	
12/16/2014	9:05 AM	12.68	
12/16/2014	1:30 PM	12.70	
12/16/2014	4:35 PM	12.72	
12/17/2014	8:15 AM	12.72	
12/17/2014	1:30 PM	12.70	
12/17/2014	5:00 PM	12.68	
12/18/2014	5:20 AM	12.70	
12/18/2014	9:30 AM	12.70	
12/18/2014	1:10 PM	12.68	
12/18/2014	5:00 PM	12.72	
12/19/2014	5:00 AM	12.72	
12/19/2014	8:55 AM	12.72	
12/19/2014	12:55 PM	12.70	
12/19/2014	5:00 PM	12.74	
12/20/2014	2:50 PM	12.72	
12/21/2014	10:30 AM	12.72	
12/22/2014	5:10 AM	12.70	
12/22/2014	9:00 AM	12.70	
12/22/2014	1:00 PM	12.68	
12/22/2014	4:50 PM	12.66	
12/23/2014	5:15 AM	12.63	
12/23/2014	9:05 AM	12.58	
12/23/2014	1:00 PM	12.56	
12/24/2014	9:20 AM	12.63	
12/24/2014	12:20 PM	12.60	
12/24/2014	3:20 PM	12.58	

Notes:
- *Reading time signifies the start of monitoring the entire heat extraction system*
- *See "Notes on Heat Extraction System Readings" for comments on reading events*

Date	Time	Flow (GPM)	Notes

Flowmeter: GIW-03

12/26/2014	9:00 AM	12.58	
12/26/2014	2:00 PM	12.54	
12/29/2014	5:40 AM	12.52	
12/29/2014	9:00 AM	12.50	
12/29/2014	1:00 PM	12.45	
12/30/2014	5:15 AM	12.38	
12/30/2014	9:00 AM	12.34	
12/30/2014	1:00 PM	12.32	
12/31/2014	5:25 AM	11.94	
12/31/2014	9:00 AM	11.75	
12/31/2014	1:00 PM	12.96	
204 readings		Average: 10.44	

Flowmeter: GIW-04

10/14/2014	2:40 PM	3.40	
10/14/2014	5:45 PM	3.48	
10/15/2014	8:20 AM	4.72	
10/15/2014	1:25 PM	6.85	
10/16/2014	2:25 PM	7.27	
10/17/2014	1:05 PM	5.97	
10/18/2014	2:40 PM	5.39	
10/19/2014	8:04 AM	0.00	
10/19/2014	12:20 PM	0.00	
10/20/2014	2:35 PM	0.00	
10/21/2014	10:30 AM	0.00	
10/22/2014	9:30 AM	0.00	
10/23/2014	4:50 PM	0.00	
10/24/2014	11:05 AM	8.94	
10/24/2014	1:00 PM	8.05	
10/24/2014	4:50 PM	8.10	
10/25/2014	9:01 AM	3.10	
10/25/2014	1:00 PM	2.69	
10/25/2014	5:25 PM	2.24	
10/26/2014	9:20 AM	1.73	
10/26/2014	1:15 PM	1.45	
10/26/2014	5:15 PM	1.47	

Notes:
- *Reading time signifies the start of monitoring the entire heat extraction system*
- *See "Notes on Heat Extraction System Readings" for comments on reading events*

Date	Time	Flow (GPM)	Notes

Flowmeter: GIW-04

10/27/2014	9:00 AM	1.56	
10/27/2014	1:00 PM	7.92	
10/27/2014	5:10 PM	8.03	
10/28/2014	9:00 AM	7.98	
10/28/2014	1:00 PM	8.14	
10/28/2014	4:45 PM	8.00	
10/29/2014	7:00 AM	8.09	
10/29/2014	10:10 AM	0.00	
10/29/2014	1:10 PM	7.84	
10/29/2014	4:45 PM	8.00	
10/30/2014	7:00 AM	8.03	
10/30/2014	9:00 AM	8.03	
10/30/2014	1:00 PM	8.00	
10/30/2014	4:30 PM	7.98	
10/31/2014	5:00 AM	7.82	
10/31/2014	9:00 AM	7.88	
10/31/2014	1:00 PM	7.75	
10/31/2014	4:30 PM	7.78	
11/1/2014	5:15 AM	7.56	
11/1/2014	4:50 PM	7.38	
11/2/2014	4:45 AM	7.34	
11/2/2014	9:15 AM	7.22	
11/3/2014	5:00 AM	7.42	
11/3/2014	9:00 AM	7.34	
11/3/2014	1:00 PM	7.30	
11/3/2014	4:45 PM	7.27	
11/4/2014	5:00 AM	7.38	
11/4/2014	9:20 AM	7.20	
11/4/2014	1:00 PM	7.28	
11/4/2014	4:30 PM	7.30	
11/5/2014	5:05 AM	7.34	
11/5/2014	9:10 AM	7.36	
11/5/2014	12:50 PM	7.38	
11/5/2014	4:30 PM	7.38	
11/6/2014	9:10 AM	7.38	
11/6/2014	1:05 PM	7.44	
11/6/2014	4:40 PM	7.92	

Notes:
- *Reading time signifies the start of monitoring the entire heat extraction system*
- *See "Notes on Heat Extraction System Readings" for comments on reading events*

Date	Time	Flow (GPM)	Notes

Flowmeter: GIW-04

11/7/2014	9:10 AM	7.84	
11/7/2014	1:10 PM	7.92	
11/8/2014	6:30 AM	7.79	
11/8/2014	12:30 PM	7.77	
11/9/2014	7:42 AM	7.72	
11/10/2014	5:00 AM	7.55	
11/10/2014	9:00 AM	7.55	
11/10/2014	12:50 PM	7.44	
11/11/2014	5:00 AM	6.46	
11/11/2014	9:15 AM	6.34	
11/11/2014	1:15 PM	6.25	
11/11/2014	4:45 PM	6.20	
11/12/2014	5:00 AM	6.04	
11/12/2014	9:00 AM	5.86	
11/12/2014	1:30 PM	6.49	
11/12/2014	4:45 PM	6.84	
11/13/2014	4:50 AM	6.82	
11/13/2014	9:28 AM	6.82	
11/13/2014	1:00 PM	6.90	
11/13/2014	4:50 PM	6.86	
11/14/2014	5:10 AM	6.72	
11/14/2014	9:10 AM	6.72	
11/14/2014	1:00 PM	6.70	
11/15/2014	8:50 AM	6.47	
11/16/2014	5:00 AM	6.23	
11/16/2014	9:00 AM	6.19	
11/17/2014	4:50 AM	5.22	
11/17/2014	9:15 AM	5.06	
11/17/2014	1:20 PM	6.34	
11/17/2014	4:30 PM	6.40	
11/18/2014	5:00 AM	6.33	
11/18/2014	9:10 AM	6.30	
11/18/2014	1:00 PM	6.36	
11/18/2014	4:40 PM	6.36	
11/19/2014	5:00 AM	6.21	
11/19/2014	9:00 AM	6.19	
11/19/2014	1:15 PM	6.21	

Notes:
- *Reading time signifies the start of monitoring the entire heat extraction system*
- *See "Notes on Heat Extraction System Readings" for comments on reading events*

Date	Time	Flow (GPM)	Notes

Flowmeter: GIW-04

11/19/2014	4:45 PM	6.21	
11/20/2014	6:00 AM	6.04	
11/20/2014	9:25 AM	6.00	
11/20/2014	1:00 PM	5.95	
11/20/2014	4:50 PM	6.06	
11/21/2014	6:10 AM	6.00	
11/21/2014	9:00 AM	5.90	
11/21/2014	2:40 PM	5.90	
11/22/2014		5.30	
11/24/2014	10:40 AM	6.12	
11/24/2014	1:20 PM	6.32	
11/25/2014	5:00 AM	6.13	
11/25/2014	9:00 AM	6.30	
11/25/2014	1:00 PM	6.30	
11/25/2014	4:30 PM	6.30	
11/26/2014	4:50 AM	6.14	
11/26/2014	9:00 AM	6.23	
11/26/2014	1:00 PM	6.25	
11/27/2014	5:00 AM	6.25	
11/27/2014	9:00 AM	6.23	
11/27/2014	1:00 PM	6.21	
11/28/2014	5:00 AM	6.22	
11/28/2014	9:00 AM	6.14	
11/29/2014	9:00 AM	4.90	
11/29/2014	4:50 PM	4.85	
11/30/2014	8:50 AM	4.49	
11/30/2014	12:50 PM	4.32	
12/1/2014	5:20 AM	1.56	
12/1/2014	9:00 AM	1.96	
12/1/2014	12:50 PM	5.84	
12/1/2014	5:00 PM	6.28	
12/2/2014	5:10 AM	6.12	
12/2/2014	9:15 AM	6.23	
12/2/2014	1:15 PM	6.25	
12/2/2014	4:50 PM	6.26	
12/3/2014	5:05 AM	6.23	
12/3/2014	9:00 AM	6.23	

Notes:
- *Reading time signifies the start of monitoring the entire heat extraction system*
- *See "Notes on Heat Extraction System Readings" for comments on reading events*

Date	Time	Flow (GPM)	Notes

Flowmeter: GIW-04

12/3/2014	12:45 PM	6.21	
12/3/2014	5:00 PM	6.21	
12/4/2014	9:00 AM	6.23	
12/4/2014	1:10 PM	6.21	
12/4/2014	5:00 PM	6.21	
12/5/2014	5:05 AM	6.19	
12/5/2014	9:00 AM	6.14	
12/6/2014		6.12	
12/8/2014	5:00 AM	6.02	
12/8/2014	9:00 AM	6.00	
12/8/2014	1:30 PM	5.95	
12/8/2014	5:00 PM	5.95	
12/9/2014	5:00 AM	5.93	
12/9/2014	9:00 AM	5.88	
12/9/2014	1:15 PM	5.88	
12/9/2014	5:25 PM	5.86	
12/10/2014	4:30 AM	5.76	
12/10/2014	5:30 AM	5.82	
12/10/2014	9:15 AM	5.82	
12/10/2014	1:15 PM	5.82	
12/10/2014	4:30 PM	5.76	
12/11/2014	5:00 AM	5.67	
12/11/2014	9:00 AM	5.65	
12/11/2014	1:00 PM	9.58	
12/11/2014	5:00 PM	9.56	
12/12/2014	5:00 AM	5.43	
12/12/2014	9:00 AM	5.50	
12/12/2014	1:00 PM	5.46	
12/12/2014	5:20 PM	5.43	
12/13/2014	9:00 AM	5.20	
12/14/2014	1:00 PM	6.10	
12/15/2014	5:00 AM	6.12	
12/15/2014	9:00 AM	6.12	
12/15/2014	1:00 PM	6.12	
12/15/2014	4:50 PM	6.10	
12/16/2014	4:50 AM	6.15	
12/16/2014	9:05 AM	6.21	

Notes:
- *Reading time signifies the start of monitoring the entire heat extraction system*
- *See "Notes on Heat Extraction System Readings" for comments on reading events*

Date	Time	Flow (GPM)	Notes

Flowmeter: GIW-04

12/16/2014	1:30 PM	6.21	
12/16/2014	4:35 PM	6.21	
12/17/2014	8:15 AM	6.23	
12/17/2014	1:30 PM	6.21	
12/17/2014	5:00 PM	6.21	
12/18/2014	5:20 AM	6.21	
12/18/2014	9:30 AM	6.23	
12/18/2014	1:10 PM	6.19	
12/18/2014	5:00 PM	6.20	
12/19/2014	5:00 AM	6.19	
12/19/2014	8:55 AM	6.19	
12/19/2014	12:55 PM	6.19	
12/19/2014	5:00 PM	6.19	
12/20/2014	2:50 PM	6.16	
12/21/2014	10:30 AM	6.16	
12/22/2014	5:10 AM	6.14	
12/22/2014	9:00 AM	6.14	
12/22/2014	1:00 PM	6.08	
12/22/2014	4:50 PM	6.09	
12/23/2014	5:15 AM	6.12	
12/23/2014	9:05 AM	6.12	
12/23/2014	1:00 PM	6.10	
12/24/2014	9:20 AM	6.14	
12/24/2014	12:20 PM	6.12	
12/24/2014	3:20 PM	6.14	
12/26/2014	9:00 AM	6.10	
12/26/2014	2:00 PM	6.04	
12/29/2014	5:40 AM	9.70	
12/29/2014	9:00 AM	6.12	
12/29/2014	1:00 PM	6.08	
12/30/2014	5:15 AM	6.09	
12/30/2014	9:00 AM	6.04	
12/30/2014	1:00 PM	6.02	
12/31/2014	5:25 AM	5.86	
12/31/2014	9:00 AM	5.75	
12/31/2014	1:00 PM	6.30	

Notes:
- *Reading time signifies the start of monitoring the entire heat extraction system*
- *See "Notes on Heat Extraction System Readings" for comments on reading events*

Date	Time	Flow (GPM)	Notes

Flowmeter: GIW-04

206 readings

Average: 6.08

Flowmeter: GIW-05

10/14/2014	2:40 PM	2.56	
10/14/2014	5:45 PM	4.25	
10/15/2014	8:20 AM	4.58	
10/15/2014	1:25 PM	4.12	
10/16/2014	2:25 PM	6.34	
10/17/2014	1:05 PM	7.65	
10/18/2014	2:40 PM	8.12	
10/19/2014	8:04 AM	0.00	
10/19/2014	12:20 PM	0.00	
10/20/2014	2:35 PM	0.00	
10/21/2014	10:30 AM	0.00	
10/22/2014	9:30 AM	0.00	
10/23/2014	4:50 PM	0.00	
10/24/2014	11:05 AM	10.19	
10/24/2014	1:00 PM	10.26	
10/24/2014	4:50 PM	10.24	
10/25/2014	9:01 AM	6.16	
10/25/2014	1:00 PM	5.33	
10/25/2014	5:25 PM	3.92	
10/26/2014	9:20 AM	2.66	
10/26/2014	1:15 PM	1.98	
10/26/2014	5:15 PM	2.02	
10/27/2014	9:00 AM	2.18	
10/27/2014	1:00 PM	10.40	
10/27/2014	5:10 PM	10.40	
10/28/2014	9:00 AM	10.45	
10/28/2014	1:00 PM	0.00	
10/28/2014	4:45 PM	10.56	
10/29/2014	7:00 AM	10.47	
10/29/2014	10:10 AM	10.66	
10/29/2014	1:10 PM	10.23	
10/29/2014	4:45 PM	10.40	
10/30/2014	7:00 AM	10.34	

Notes:
- *Reading time signifies the start of monitoring the entire heat extraction system*
- *See "Notes on Heat Extraction System Readings" for comments on reading events*

Date	Time	Flow (GPM)	Notes
Flowmeter: GIW-05			
10/30/2014	9:00 AM	10.34	
10/30/2014	1:00 PM	10.35	
10/30/2014	4:30 PM	10.34	
10/31/2014	5:00 AM	10.23	
10/31/2014	9:00 AM	10.16	
10/31/2014	1:00 PM	10.04	
10/31/2014	4:30 PM	9.97	
11/1/2014	5:15 AM	9.78	
11/1/2014	4:50 PM	9.58	
11/2/2014	4:45 AM	9.45	
11/2/2014	9:15 AM	9.28	
11/3/2014	5:00 AM	9.52	
11/3/2014	9:00 AM	9.43	
11/3/2014	1:00 PM	9.36	
11/3/2014	4:45 PM	9.36	
11/4/2014	5:00 AM	9.56	
11/4/2014	9:20 AM	9.62	
11/4/2014	1:00 PM	9.70	
11/4/2014	4:30 PM	9.76	
11/5/2014	5:05 AM	9.84	
11/5/2014	9:10 AM	9.84	
11/5/2014	12:50 PM	10.00	
11/5/2014	4:30 PM	10.04	
11/6/2014	9:10 AM	9.92	
11/6/2014	1:05 PM	10.45	
11/6/2014	4:40 PM	10.64	
11/7/2014	9:10 AM	8.54	
11/7/2014	1:10 PM	8.17	
11/8/2014	6:30 AM	8.10	
11/8/2014	12:30 PM	8.08	
11/9/2014	7:42 AM	8.08	
11/10/2014	5:00 AM	7.86	
11/10/2014	9:00 AM	7.86	
11/10/2014	12:50 PM	7.74	
11/11/2014	5:00 AM	8.02	
11/11/2014	9:15 AM	7.84	
11/11/2014	1:15 PM	7.76	

Notes:
- *Reading time signifies the start of monitoring the entire heat extraction system*
- *See "Notes on Heat Extraction System Readings" for comments on reading events*

Date	Time	Flow (GPM)	Notes
Flowmeter: GIW-05			
11/11/2014	4:45 PM	7.67	
11/12/2014	5:00 AM	7.48	
11/12/2014	9:00 AM	7.28	
11/12/2014	1:30 PM	8.32	
11/12/2014	4:45 PM	8.58	
11/13/2014	4:50 AM	8.52	
11/13/2014	9:28 AM	8.50	
11/13/2014	1:00 PM	8.60	
11/13/2014	4:50 PM	8.56	
11/14/2014	5:10 AM	8.45	
11/14/2014	9:10 AM	8.41	
11/14/2014	1:00 PM	8.34	
11/15/2014	8:50 AM	9.76	
11/16/2014	5:00 AM	9.40	
11/16/2014	9:00 AM	9.32	
11/17/2014	4:50 AM	8.04	
11/17/2014	9:15 AM	8.04	
11/17/2014	1:20 PM	10.19	
11/17/2014	4:30 PM	10.26	
11/18/2014	5:00 AM	10.23	
11/18/2014	9:10 AM	10.21	
11/18/2014	1:00 PM	10.23	
11/18/2014	4:40 PM	10.21	
11/19/2014	5:00 AM	10.14	
11/19/2014	9:00 AM	10.10	
11/19/2014	1:15 PM	10.02	
11/19/2014	4:45 PM	9.97	
11/20/2014	6:00 AM	9.90	
11/20/2014	9:25 AM	9.82	
11/20/2014	1:00 PM	9.73	
11/20/2014	4:50 PM	9.76	
11/21/2014	6:10 AM	9.71	
11/21/2014	9:00 AM	9.73	
11/21/2014	2:40 PM	9.52	
11/22/2014		9.54	
11/24/2014	10:40 AM	10.26	
11/24/2014	1:20 PM	10.32	

Notes:
- *Reading time signifies the start of monitoring the entire heat extraction system*
- *See "Notes on Heat Extraction System Readings" for comments on reading events*

Date	Time	Flow (GPM)	Notes
Flowmeter: GIW-05			
11/25/2014	5:00 AM	10.28	
11/25/2014	9:00 AM	10.24	
11/25/2014	1:00 PM	10.21	
11/25/2014	4:30 PM	10.21	
11/26/2014	4:50 AM	10.14	
11/26/2014	9:00 AM	10.16	
11/26/2014	1:00 PM	10.19	
11/27/2014	5:00 AM	10.16	
11/27/2014	9:00 AM	10.14	
11/27/2014	1:00 PM	10.14	
11/28/2014	5:00 AM	10.06	
11/28/2014	9:00 AM	10.06	
11/29/2014	9:00 AM	7.89	
11/29/2014	4:50 PM	7.84	
11/30/2014	8:50 AM	7.19	
11/30/2014	12:50 PM	6.95	
12/1/2014	5:20 AM	3.19	
12/1/2014	9:00 AM	3.04	
12/1/2014	12:50 PM	9.69	
12/1/2014	5:00 PM	10.30	
12/2/2014	5:10 AM	10.19	
12/2/2014	9:15 AM	10.34	
12/2/2014	1:15 PM	10.32	
12/2/2014	4:50 PM	10.32	
12/3/2014	5:05 AM	10.30	
12/3/2014	9:00 AM	10.23	
12/3/2014	12:45 PM	10.23	
12/3/2014	5:00 PM	10.19	
12/4/2014	9:00 AM	10.28	
12/4/2014	1:10 PM	10.30	
12/4/2014	5:00 PM	10.28	
12/5/2014	5:05 AM	10.25	
12/5/2014	9:00 AM	10.21	
12/6/2014		10.08	
12/8/2014	5:00 AM	9.89	
12/8/2014	9:00 AM	9.88	
12/8/2014	1:30 PM	9.84	

Notes:
- *Reading time signifies the start of monitoring the entire heat extraction system*
- *See "Notes on Heat Extraction System Readings" for comments on reading events*

Date	Time	Flow (GPM)	Notes
Flowmeter: GIW-05			
12/8/2014	5:00 PM	9.84	
12/9/2014	5:00 AM	9.73	
12/9/2014	9:00 AM	9.62	
12/9/2014	1:15 PM	9.62	
12/9/2014	5:25 PM	9.62	
12/10/2014	4:30 AM	9.40	
12/10/2014	5:30 AM	9.52	
12/10/2014	9:15 AM	9.52	
12/10/2014	1:15 PM	9.52	
12/10/2014	4:30 PM	9.40	
12/11/2014	5:00 AM	9.28	
12/11/2014	9:00 AM	9.21	
12/11/2014	1:00 PM	9.12	
12/11/2014	5:00 PM	9.10	
12/12/2014	5:00 AM	9.04	
12/12/2014	9:00 AM	9.00	
12/12/2014	1:00 PM	9.60	
12/12/2014	5:20 PM	8.91	
12/13/2014	9:00 AM	0.00	
12/14/2014	1:00 PM	10.23	
12/15/2014	5:00 AM	10.23	
12/15/2014	9:00 AM	10.26	
12/15/2014	1:00 PM	10.23	
12/15/2014	4:50 PM	10.23	
12/16/2014	4:50 AM	10.23	
12/16/2014	9:05 AM	10.23	
12/16/2014	1:30 PM	10.28	
12/16/2014	4:35 PM	10.26	
12/17/2014	8:15 AM	10.23	
12/17/2014	1:30 PM	10.19	
12/17/2014	5:00 PM	10.21	
12/18/2014	5:20 AM	10.19	
12/18/2014	9:30 AM	10.16	
12/18/2014	1:10 PM	10.16	
12/18/2014	5:00 PM	10.20	
12/19/2014	5:00 AM	10.21	
12/19/2014	8:55 AM	10.21	

Notes:
- *Reading time signifies the start of monitoring the entire heat extraction system*
- *See "Notes on Heat Extraction System Readings" for comments on reading events*

Date	Time	Flow (GPM)	Notes

Flowmeter: GIW-05

12/19/2014	12:55 PM	10.21	
12/19/2014	5:00 PM	10.40	
12/20/2014	2:50 PM	10.34	
12/21/2014	10:30 AM	10.28	
12/22/2014	5:10 AM	10.23	
12/22/2014	9:00 AM	10.26	
12/22/2014	1:00 PM	10.23	
12/22/2014	4:50 PM	10.23	
12/23/2014	5:15 AM	10.23	
12/23/2014	9:05 AM	10.21	
12/23/2014	1:00 PM	10.32	
12/24/2014	9:20 AM	10.23	
12/24/2014	12:20 PM	10.23	
12/24/2014	3:20 PM	10.34	
12/26/2014	9:00 AM	10.30	
12/26/2014	2:00 PM	10.28	
12/29/2014	5:40 AM	10.06	
12/29/2014	9:00 AM	10.06	
12/29/2014	1:00 PM	10.06	
12/30/2014	5:15 AM	10.02	
12/30/2014	9:00 AM	9.95	
12/30/2014	1:00 PM	9.92	
12/31/2014	5:25 AM	9.60	
12/31/2014	9:00 AM	9.38	
12/31/2014	1:00 PM	10.49	
206 readings		Average: 8.89	

Flowmeter: GIW-06

10/14/2014	2:40 PM	3.63	
10/14/2014	5:45 PM	3.16	
10/15/2014	8:20 AM	4.88	
10/15/2014	1:25 PM	5.82	
10/16/2014	2:25 PM	6.19	
10/17/2014	1:05 PM	7.65	
10/18/2014	2:40 PM	7.98	
10/19/2014	8:04 AM	0.00	

Notes:
- *Reading time signifies the start of monitoring the entire heat extraction system*
- *See "Notes on Heat Extraction System Readings" for comments on reading events*

Date	Time	Flow (GPM)	Notes

Flowmeter: GIW-06

10/19/2014	12:20 PM	0.00	
10/20/2014	2:35 PM	0.00	
10/21/2014	10:30 AM	0.00	
10/22/2014	9:30 AM	0.00	
10/23/2014	4:50 PM	0.00	
10/24/2014	11:05 AM	10.12	
10/24/2014	1:00 PM	10.13	
10/24/2014	4:50 PM	10.34	
10/25/2014	9:01 AM	7.19	
10/25/2014	1:00 PM	6.52	
10/25/2014	5:25 PM	5.71	
10/26/2014	9:20 AM	4.78	
10/26/2014	1:15 PM	4.52	
10/26/2014	5:15 PM	4.48	
10/27/2014	9:00 AM	4.54	
10/27/2014	1:00 PM	10.20	
10/27/2014	5:10 PM	10.44	
10/28/2014	9:00 AM	10.44	
10/28/2014	1:00 PM	10.80	
10/28/2014	4:45 PM	10.49	
10/29/2014	7:00 AM	10.46	
10/29/2014	10:10 AM	10.70	
10/29/2014	1:10 PM	10.31	
10/29/2014	4:45 PM	10.52	
10/30/2014	7:00 AM	10.48	
10/30/2014	9:00 AM	10.48	
10/30/2014	1:00 PM	10.44	
10/30/2014	4:30 PM	10.46	
10/31/2014	5:00 AM	10.35	
10/31/2014	9:00 AM	10.31	
10/31/2014	1:00 PM	10.18	
10/31/2014	4:30 PM	10.10	
11/1/2014	5:15 AM	9.94	
11/1/2014	4:50 PM	9.75	
11/2/2014	4:45 AM	9.68	
11/2/2014	9:15 AM	9.53	
11/3/2014	5:00 AM	9.77	

Notes:
- *Reading time signifies the start of monitoring the entire heat extraction system*
- *See "Notes on Heat Extraction System Readings" for comments on reading events*

Date	Time	Flow (GPM)	Notes

Flowmeter: GIW-06

11/3/2014	9:00 AM	9.62	
11/3/2014	1:00 PM	9.60	
11/3/2014	4:45 PM	9.60	
11/4/2014	5:00 AM	9.77	
11/4/2014	9:20 AM	9.84	
11/4/2014	1:00 PM	9.86	
11/4/2014	4:30 PM	9.90	
11/5/2014	5:05 AM	9.98	
11/5/2014	9:10 AM	9.98	
11/5/2014	12:50 PM	10.05	
11/5/2014	4:30 PM	9.68	
11/6/2014	9:10 AM	9.68	
11/6/2014	1:05 PM	10.14	
11/6/2014	4:40 PM	10.52	
11/7/2014	9:10 AM	8.40	
11/7/2014	1:10 PM	8.40	
11/8/2014	6:30 AM	8.38	
11/8/2014	12:30 PM	8.17	
11/9/2014	7:42 AM	8.34	
11/10/2014	5:00 AM	8.12	
11/10/2014	9:00 AM	8.12	
11/10/2014	12:50 PM	8.08	
11/11/2014	5:00 AM	7.82	
11/11/2014	9:15 AM	7.69	
11/11/2014	1:15 PM	7.60	
11/11/2014	4:45 PM	7.52	
11/12/2014	5:00 AM	7.34	
11/12/2014	9:00 AM	7.14	
11/12/2014	1:30 PM	8.08	
11/12/2014	4:45 PM	8.45	
11/13/2014	4:50 AM	8.45	
11/13/2014	9:28 AM	8.40	
11/13/2014	1:00 PM	8.47	
11/13/2014	4:50 PM	8.50	
11/14/2014	5:10 AM	8.40	
11/14/2014	9:10 AM	8.30	
11/14/2014	1:00 PM	8.36	

Notes:
- *Reading time signifies the start of monitoring the entire heat extraction system*
- *See "Notes on Heat Extraction System Readings" for comments on reading events*

Date	Time	Flow (GPM)	Notes

Flowmeter: GIW-06

11/15/2014	8:50 AM	9.46	
11/16/2014	5:00 AM	9.18	
11/16/2014	9:00 AM	9.04	
11/17/2014	4:50 AM	8.00	
11/17/2014	9:15 AM	8.00	
11/17/2014	1:20 PM	10.38	
11/17/2014	4:30 PM	10.72	
11/18/2014	5:00 AM	10.76	
11/18/2014	9:10 AM	10.76	
11/18/2014	1:00 PM	10.70	
11/18/2014	4:40 PM	10.68	
11/19/2014	5:00 AM	10.68	
11/19/2014	9:00 AM	10.61	
11/19/2014	1:15 PM	10.46	
11/19/2014	4:45 PM	10.42	
11/20/2014	6:00 AM	10.38	
11/20/2014	9:25 AM	10.35	
11/20/2014	1:00 PM	10.24	
11/20/2014	4:50 PM	10.18	
11/21/2014	6:10 AM	10.18	
11/21/2014	9:00 AM	10.20	
11/21/2014	2:40 PM	9.98	
11/22/2014		10.03	
11/24/2014	10:40 AM	10.52	
11/24/2014	1:20 PM	10.74	
11/25/2014	5:00 AM	10.72	
11/25/2014	9:00 AM	10.72	
11/25/2014	1:00 PM	10.68	
11/25/2014	4:30 PM	10.68	
11/26/2014	4:50 AM	10.70	
11/26/2014	9:00 AM	10.68	
11/26/2014	1:00 PM	10.64	
11/27/2014	5:00 AM	10.52	
11/27/2014	9:00 AM	10.57	
11/27/2014	1:00 PM	10.44	
11/28/2014	5:00 AM	10.46	
11/28/2014	9:00 AM	10.44	

Notes:
- *Reading time signifies the start of monitoring the entire heat extraction system*
- *See "Notes on Heat Extraction System Readings" for comments on reading events*

Date	Time	Flow (GPM)	Notes

Flowmeter: GIW-06

11/29/2014	9:00 AM	8.45	
11/29/2014	4:50 PM	8.45	
11/30/2014	8:50 AM	7.84	
11/30/2014	12:50 PM	7.58	
12/1/2014	5:20 AM	3.50	
12/1/2014	9:00 AM	3.44	
12/1/2014	12:50 PM	9.82	
12/1/2014	5:00 PM	10.70	
12/2/2014	5:10 AM	10.72	
12/2/2014	9:15 AM	10.72	
12/2/2014	1:15 PM	10.68	
12/2/2014	4:50 PM	10.66	
12/3/2014	5:05 AM	10.66	
12/3/2014	9:00 AM	10.64	
12/3/2014	12:45 PM	10.59	
12/3/2014	5:00 PM	10.61	
12/4/2014	9:00 AM	10.59	
12/4/2014	1:10 PM	10.59	
12/4/2014	5:00 PM	10.59	
12/5/2014	5:05 AM	10.59	
12/5/2014	9:00 AM	10.59	
12/6/2014		10.46	
12/8/2014	5:00 AM	10.33	
12/8/2014	9:00 AM	10.33	
12/8/2014	1:30 PM	10.29	
12/8/2014	5:00 PM	10.29	
12/9/2014	5:00 AM	10.16	
12/9/2014	9:00 AM	10.03	
12/9/2014	1:15 PM	10.00	
12/9/2014	5:25 PM	9.96	
12/10/2014	4:30 AM	10.26	
12/10/2014	5:30 AM	9.96	
12/10/2014	9:15 AM	9.92	
12/10/2014	1:15 PM	9.92	
12/10/2014	4:30 PM	10.26	
12/11/2014	5:00 AM	9.70	
12/11/2014	9:00 AM	9.66	

Notes:
- *Reading time signifies the start of monitoring the entire heat extraction system*
- *See "Notes on Heat Extraction System Readings" for comments on reading events*

Date	Time	Flow (GPM)	Notes

Flowmeter: GIW-06

12/11/2014	1:00 PM	9.53	
12/11/2014	5:00 PM	9.56	
12/12/2014	5:00 AM	9.46	
12/12/2014	9:00 AM	9.44	
12/12/2014	1:00 PM	9.46	
12/12/2014	5:20 PM	9.44	
12/13/2014	9:00 AM	9.02	
12/14/2014	1:00 PM	10.70	
12/15/2014	5:00 AM	10.68	
12/15/2014	9:00 AM	10.68	
12/15/2014	1:00 PM	10.70	
12/15/2014	4:50 PM	10.68	
12/16/2014	4:50 AM	10.66	
12/16/2014	9:05 AM	10.64	
12/16/2014	1:30 PM	10.64	
12/16/2014	4:35 PM	10.84	
12/17/2014	8:15 AM	10.54	
12/17/2014	1:30 PM	10.59	
12/17/2014	5:00 PM	10.59	
12/18/2014	5:20 AM	10.52	
12/18/2014	9:30 AM	10.52	
12/18/2014	1:10 PM	10.34	
12/18/2014	5:00 PM	10.66	
12/19/2014	5:00 AM	10.66	
12/19/2014	8:55 AM	10.66	
12/19/2014	12:55 PM	10.64	
12/19/2014	5:00 PM	10.68	
12/20/2014	2:50 PM	10.64	
12/21/2014	10:30 AM	10.61	
12/22/2014	5:10 AM	10.64	
12/22/2014	9:00 AM	10.66	
12/22/2014	1:00 PM	10.66	
12/22/2014	4:50 PM	10.64	
12/23/2014	5:15 AM	10.61	
12/23/2014	9:05 AM	10.61	
12/23/2014	1:00 PM	10.59	
12/24/2014	9:20 AM	10.52	

Notes:
- *Reading time signifies the start of monitoring the entire heat extraction system*
- *See "Notes on Heat Extraction System Readings" for comments on reading events*

Date	Time	Flow (GPM)	Notes

Flowmeter: GIW-06

12/24/2014	12:20 PM	10.50	
12/24/2014	3:20 PM	10.50	
12/26/2014	9:00 AM	10.50	
12/26/2014	2:00 PM	10.48	
12/29/2014	5:40 AM	10.29	
12/29/2014	9:00 AM	10.26	
12/29/2014	1:00 PM	10.26	
12/30/2014	5:15 AM	10.20	
12/30/2014	9:00 AM	10.14	
12/30/2014	1:00 PM	10.12	
12/31/2014	5:25 AM	9.82	
12/31/2014	9:00 AM	9.60	
12/31/2014	1:00 PM	10.85	
206 readings		Average: 9.30	

Flowmeter: GIW-07

10/14/2014	2:40 PM	4.65	
10/14/2014	5:45 PM	4.48	
10/15/2014	8:20 AM	8.24	
10/15/2014	1:25 PM	9.34	
10/16/2014	2:25 PM	10.54	
10/17/2014	1:05 PM	7.60	
10/18/2014	2:40 PM	6.70	
10/19/2014	8:04 AM	0.00	
10/19/2014	12:20 PM	0.00	
10/20/2014	2:35 PM	0.00	
10/21/2014	10:30 AM	0.00	
10/22/2014	9:30 AM	0.00	
10/23/2014	4:50 PM	0.00	
10/24/2014	11:05 AM	10.35	
10/24/2014	1:00 PM	10.72	
10/24/2014	4:50 PM	10.12	
10/25/2014	9:01 AM	4.62	
10/25/2014	1:00 PM	3.92	
10/25/2014	5:25 PM	3.19	
10/26/2014	9:20 AM	2.18	

Notes:
- *Reading time signifies the start of monitoring the entire heat extraction system*
- *See "Notes on Heat Extraction System Readings" for comments on reading events*

Date	Time	Flow (GPM)	Notes
Flowmeter: GIW-07			
10/26/2014	1:15 PM	0.00	
10/26/2014	5:15 PM	0.00	
10/27/2014	9:00 AM	0.00	
10/27/2014	1:00 PM	11.00	
10/27/2014	5:10 PM	11.16	
10/28/2014	9:00 AM	10.94	
10/28/2014	1:00 PM	11.29	
10/28/2014	4:45 PM	10.94	
10/29/2014	7:00 AM	10.76	
10/29/2014	10:10 AM	11.02	
10/29/2014	1:10 PM	10.33	
10/29/2014	4:45 PM	10.74	
10/30/2014	7:00 AM	10.63	
10/30/2014	9:00 AM	10.66	
10/30/2014	1:00 PM	10.68	
10/30/2014	4:30 PM	10.68	
10/31/2014	5:00 AM	10.54	
10/31/2014	9:00 AM	10.42	
10/31/2014	1:00 PM	10.28	
10/31/2014	4:30 PM	10.20	
11/1/2014	5:15 AM	9.92	
11/1/2014	4:50 PM	9.80	
11/2/2014	4:45 AM	10.04	
11/2/2014	9:15 AM	9.89	
11/3/2014	5:00 AM	10.20	
11/3/2014	9:00 AM	9.82	
11/3/2014	1:00 PM	9.80	
11/3/2014	4:45 PM	9.78	
11/4/2014	5:00 AM	9.92	
11/4/2014	9:20 AM	10.04	
11/4/2014	1:00 PM	10.04	
11/4/2014	4:30 PM	10.08	
11/5/2014	5:05 AM	10.08	
11/5/2014	9:10 AM	10.08	
11/5/2014	12:50 PM	10.18	
11/5/2014	4:30 PM	10.26	
11/6/2014	9:10 AM	10.18	

Notes:
- *Reading time signifies the start of monitoring the entire heat extraction system*
- *See "Notes on Heat Extraction System Readings" for comments on reading events*

Date	Time	Flow (GPM)	Notes
Flowmeter: GIW-07			
11/6/2014	1:05 PM	10.54	
11/6/2014	4:40 PM	10.76	
11/7/2014	9:10 AM	8.20	
11/7/2014	1:10 PM	8.20	
11/8/2014	6:30 AM	8.20	
11/8/2014	12:30 PM	8.15	
11/9/2014	7:42 AM	8.12	
11/10/2014	5:00 AM	7.96	
11/10/2014	9:00 AM	7.96	
11/10/2014	12:50 PM	7.93	
11/11/2014	5:00 AM	7.86	
11/11/2014	9:15 AM	7.65	
11/11/2014	1:15 PM	7.50	
11/11/2014	4:45 PM	7.39	
11/12/2014	5:00 AM	7.20	
11/12/2014	9:00 AM	6.98	
11/12/2014	1:30 PM	8.10	
11/12/2014	4:45 PM	8.70	
11/13/2014	4:50 AM	8.78	
11/13/2014	9:28 AM	8.12	
11/13/2014	1:00 PM	8.04	
11/13/2014	4:50 PM	7.98	
11/14/2014	5:10 AM	8.00	
11/14/2014	9:10 AM	8.02	
11/14/2014	1:00 PM	7.96	
11/15/2014	8:50 AM	10.11	
11/16/2014	5:00 AM	9.60	
11/16/2014	9:00 AM	9.60	
11/17/2014	4:50 AM	8.06	
11/17/2014	9:15 AM	8.06	
11/17/2014	1:20 PM	10.13	
11/17/2014	4:30 PM	10.33	
11/18/2014	5:00 AM	10.52	
11/18/2014	9:10 AM	10.56	
11/18/2014	1:00 PM	10.37	
11/18/2014	4:40 PM	10.28	
11/19/2014	5:00 AM	10.48	

Notes:
- *Reading time signifies the start of monitoring the entire heat extraction system*
- *See "Notes on Heat Extraction System Readings" for comments on reading events*

Date	Time	Flow (GPM)	Notes
Flowmeter: GIW-07			
11/19/2014	9:00 AM	10.48	
11/19/2014	1:15 PM	10.20	
11/19/2014	4:45 PM	10.02	
11/20/2014	6:00 AM	10.24	
11/20/2014	9:25 AM	10.24	
11/20/2014	1:00 PM	10.18	
11/20/2014	4:50 PM	9.94	
11/21/2014	6:10 AM	10.04	
11/21/2014	9:00 AM	10.10	
11/21/2014	2:40 PM	9.65	
11/22/2014		10.15	
11/24/2014	10:40 AM	10.50	
11/24/2014	1:20 PM	10.52	
11/25/2014	5:00 AM	10.59	
11/25/2014	9:00 AM	10.46	
11/25/2014	1:00 PM	10.35	
11/25/2014	4:30 PM	10.30	
11/26/2014	4:50 AM	10.54	
11/26/2014	9:00 AM	10.37	
11/26/2014	1:00 PM	10.22	
11/27/2014	5:00 AM	10.15	
11/27/2014	9:00 AM	10.13	
11/27/2014	1:00 PM	10.11	
11/28/2014	5:00 AM	10.02	
11/28/2014	9:00 AM	10.02	
11/29/2014	9:00 AM	8.08	
11/29/2014	4:50 PM	8.12	
11/30/2014	8:50 AM	7.52	
11/30/2014	12:50 PM	7.30	
12/1/2014	5:20 AM	3.32	
12/1/2014	9:00 AM	3.30	
12/1/2014	12:50 PM	9.48	
12/1/2014	5:00 PM	10.24	
12/2/2014	5:10 AM	10.33	
12/2/2014	9:15 AM	10.33	
12/2/2014	1:15 PM	10.26	
12/2/2014	4:50 PM	10.24	

Notes:
- *Reading time signifies the start of monitoring the entire heat extraction system*
- *See "Notes on Heat Extraction System Readings" for comments on reading events*

Date	Time	Flow (GPM)	Notes
Flowmeter: GIW-07			
12/3/2014	5:05 AM	10.20	
12/3/2014	9:00 AM	10.18	
12/3/2014	12:45 PM	10.20	
12/3/2014	5:00 PM	10.20	
12/4/2014	9:00 AM	10.13	
12/4/2014	1:10 PM	10.15	
12/4/2014	5:00 PM	10.15	
12/5/2014	5:05 AM	10.15	
12/5/2014	9:00 AM	10.18	
12/6/2014		10.04	
12/8/2014	5:00 AM	9.84	
12/8/2014	9:00 AM	9.84	
12/8/2014	1:30 PM	9.84	
12/8/2014	5:00 PM	9.84	
12/9/2014	5:00 AM	9.67	
12/9/2014	9:00 AM	9.54	
12/9/2014	1:15 PM	9.54	
12/9/2014	5:25 PM	9.52	
12/10/2014	4:30 AM	9.72	
12/10/2014	5:30 AM	9.46	
12/10/2014	9:15 AM	9.44	
12/10/2014	1:15 PM	9.44	
12/10/2014	4:30 PM	9.72	
12/11/2014	5:00 AM	9.20	
12/11/2014	9:00 AM	9.13	
12/11/2014	1:00 PM	9.04	
12/11/2014	5:00 PM	9.04	
12/12/2014	5:00 AM	9.03	
12/12/2014	9:00 AM	8.95	
12/12/2014	1:00 PM	8.98	
12/12/2014	5:20 PM	8.93	
12/13/2014	9:00 AM	8.54	
12/14/2014	1:00 PM	10.15	
12/15/2014	5:00 AM	10.13	
12/15/2014	9:00 AM	10.11	
12/15/2014	1:00 PM	10.11	
12/15/2014	4:50 PM	10.11	

Notes:
- *Reading time signifies the start of monitoring the entire heat extraction system*
- *See "Notes on Heat Extraction System Readings" for comments on reading events*

Date	Time	Flow (GPM)	Notes
Flowmeter: GIW-07			
12/16/2014	4:50 AM	10.02	
12/16/2014	9:05 AM	10.00	
12/16/2014	1:30 PM	9.96	
12/16/2014	4:35 PM	9.94	
12/17/2014	8:15 AM	9.92	
12/17/2014	1:30 PM	9.92	
12/17/2014	5:00 PM	9.92	
12/18/2014	5:20 AM	9.89	
12/18/2014	9:30 AM	9.89	
12/18/2014	1:10 PM	9.89	
12/18/2014	5:00 PM	10.00	
12/19/2014	5:00 AM	10.00	
12/19/2014	8:55 AM	9.96	
12/19/2014	12:55 PM	10.00	
12/19/2014	5:00 PM	10.00	
12/20/2014	2:50 PM	10.02	
12/21/2014	10:30 AM	10.00	
12/22/2014	5:10 AM	10.02	
12/22/2014	9:00 AM	10.04	
12/22/2014	1:00 PM	10.08	
12/22/2014	4:50 PM	10.07	
12/23/2014	5:15 AM	10.08	
12/23/2014	9:05 AM	10.06	
12/23/2014	1:00 PM	10.08	
12/24/2014	9:20 AM	10.02	
12/24/2014	12:20 PM	10.02	
12/24/2014	3:20 PM	10.02	
12/26/2014	9:00 AM	9.98	
12/26/2014	2:00 PM	10.02	
12/29/2014	5:40 AM	9.78	
12/29/2014	9:00 AM	9.78	
12/29/2014	1:00 PM	9.78	
12/30/2014	5:15 AM	9.70	
12/30/2014	9:00 AM	9.65	
12/30/2014	1:00 PM	9.65	
12/31/2014	5:25 AM	9.32	
12/31/2014	9:00 AM	9.08	

Notes:
- *Reading time signifies the start of monitoring the entire heat extraction system*
- *See "Notes on Heat Extraction System Readings" for comments on reading events*

Date	Time	Flow (GPM)	Notes

Flowmeter: GIW-07

12/31/2014	1:00 PM	10.18	
206 readings		Average: 9.03	

Flowmeter: GIW-10

10/14/2014	2:40 PM	5.98	
10/14/2014	5:45 PM	5.56	
10/15/2014	8:20 AM	8.90	
10/15/2014	1:25 PM	8.58	
10/16/2014	2:25 PM	12.34	
10/17/2014	1:05 PM	7.18	
10/18/2014	2:40 PM	6.46	
10/19/2014	8:04 AM	0.00	
10/19/2014	12:20 PM	0.00	
10/20/2014	2:35 PM	0.00	
10/21/2014	10:30 AM	0.00	
10/22/2014	9:30 AM	0.00	
10/23/2014	4:50 PM	0.00	
10/24/2014	11:05 AM	10.61	
10/24/2014	1:00 PM	10.42	
10/24/2014	4:50 PM	10.53	
10/25/2014	9:01 AM	5.11	
10/25/2014	1:00 PM	4.28	
10/25/2014	5:25 PM	2.44	
10/26/2014	9:20 AM	0.00	
10/26/2014	1:15 PM	0.00	
10/26/2014	5:15 PM	0.00	
10/27/2014	9:00 AM	0.00	
10/27/2014	1:00 PM	10.96	
10/27/2014	5:10 PM	11.10	
10/28/2014	9:00 AM	10.98	
10/28/2014	1:00 PM	11.33	
10/28/2014	4:45 PM	11.00	
10/29/2014	7:00 AM	10.91	
10/29/2014	10:10 AM	11.17	
10/29/2014	1:10 PM	10.26	
10/29/2014	4:45 PM	10.70	

Notes:
- *Reading time signifies the start of monitoring the entire heat extraction system*
- *See "Notes on Heat Extraction System Readings" for comments on reading events*

Date	Time	Flow (GPM)	Notes

Flowmeter: GIW-10

10/30/2014	7:00 AM	10.56	
10/30/2014	9:00 AM	10.58	
10/30/2014	1:00 PM	10.58	
10/30/2014	4:30 PM	10.61	
10/31/2014	5:00 AM	10.48	
10/31/2014	9:00 AM	10.40	
10/31/2014	1:00 PM	10.26	
10/31/2014	4:30 PM	10.16	
11/1/2014	5:15 AM	9.88	
11/1/2014	4:50 PM	9.68	
11/2/2014	4:45 AM	9.81	
11/2/2014	9:15 AM	9.64	
11/3/2014	5:00 AM	10.00	
11/3/2014	9:00 AM	9.68	
11/3/2014	1:00 PM	9.62	
11/3/2014	4:45 PM	9.60	
11/4/2014	5:00 AM	9.81	
11/4/2014	9:20 AM	9.94	
11/4/2014	1:00 PM	9.98	
11/4/2014	4:30 PM	10.02	
11/5/2014	5:05 AM	10.07	
11/5/2014	9:10 AM	10.07	
11/5/2014	12:50 PM	10.11	
11/5/2014	4:30 PM	10.18	
11/6/2014	9:10 AM	10.09	
11/6/2014	1:05 PM	10.52	
11/6/2014	4:40 PM	10.10	
11/7/2014	9:10 AM	8.08	
11/7/2014	1:10 PM	8.10	
11/8/2014	6:30 AM	8.08	
11/8/2014	12:30 PM	8.08	
11/9/2014	7:42 AM	8.02	
11/10/2014	5:00 AM	7.86	
11/10/2014	9:00 AM	7.84	
11/10/2014	12:50 PM	7.78	
11/11/2014	5:00 AM	8.00	
11/11/2014	9:15 AM	7.76	

Notes:
- *Reading time signifies the start of monitoring the entire heat extraction system*
- *See "Notes on Heat Extraction System Readings" for comments on reading events*

Date	Time	Flow (GPM)	Notes

Flowmeter: GIW-10

11/11/2014	1:15 PM	7.67	
11/11/2014	4:45 PM	7.58	
11/12/2014	5:00 AM	7.38	
11/12/2014	9:00 AM	7.14	
11/12/2014	1:30 PM	8.04	
11/12/2014	4:45 PM	8.50	
11/13/2014	4:50 AM	8.56	
11/13/2014	9:28 AM	8.54	
11/13/2014	1:00 PM	8.44	
11/13/2014	4:50 PM	8.40	
11/14/2014	5:10 AM	8.47	
11/14/2014	9:10 AM	8.43	
11/14/2014	1:00 PM	8.04	
11/15/2014	8:50 AM	10.28	
11/16/2014	5:00 AM	9.90	
11/16/2014	9:00 AM	9.86	
11/17/2014	4:50 AM	8.38	
11/17/2014	9:15 AM	8.12	
11/17/2014	1:20 PM	10.28	
11/17/2014	4:30 PM	10.44	
11/18/2014	5:00 AM	10.58	
11/18/2014	9:10 AM	10.61	
11/18/2014	1:00 PM	10.50	
11/18/2014	4:40 PM	10.44	
11/19/2014	5:00 AM	10.54	
11/19/2014	9:00 AM	10.54	
11/19/2014	1:15 PM	10.33	
11/19/2014	4:45 PM	10.24	
11/20/2014	6:00 AM	10.30	
11/20/2014	9:25 AM	10.28	
11/20/2014	1:00 PM	10.20	
11/20/2014	4:50 PM	10.02	
11/21/2014	6:10 AM	10.14	
11/21/2014	9:00 AM	10.14	
11/21/2014	2:40 PM	9.68	
11/22/2014		10.02	
11/24/2014	10:40 AM	10.37	

Notes:
- *Reading time signifies the start of monitoring the entire heat extraction system*
- *See "Notes on Heat Extraction System Readings" for comments on reading events*

Date	Time	Flow (GPM)	Notes

Flowmeter: GIW-10

11/24/2014	1:20 PM	10.58	
11/25/2014	5:00 AM	10.63	
11/25/2014	9:00 AM	10.58	
11/25/2014	1:00 PM	10.48	
11/25/2014	4:30 PM	10.48	
11/26/2014	4:50 AM	10.56	
11/26/2014	9:00 AM	10.50	
11/26/2014	1:00 PM	10.46	
11/27/2014	5:00 AM	10.37	
11/27/2014	9:00 AM	10.33	
11/27/2014	1:00 PM	10.33	
11/28/2014	5:00 AM	10.24	
11/28/2014	9:00 AM	10.20	
11/29/2014	9:00 AM	7.92	
11/29/2014	4:50 PM	8.00	
11/30/2014	8:50 AM	7.34	
11/30/2014	12:50 PM	7.10	
12/1/2014	5:20 AM	2.46	
12/1/2014	9:00 AM	2.49	
12/1/2014	12:50 PM	9.57	
12/1/2014	5:00 PM	10.48	
12/2/2014	5:10 AM	10.56	
12/2/2014	9:15 AM	10.52	
12/2/2014	1:15 PM	10.50	
12/2/2014	4:50 PM	10.48	
12/3/2014	5:05 AM	10.46	
12/3/2014	9:00 AM	10.42	
12/3/2014	12:45 PM	10.42	
12/3/2014	5:00 PM	10.40	
12/4/2014	9:00 AM	10.37	
12/4/2014	1:10 PM	10.40	
12/4/2014	5:00 PM	10.40	
12/5/2014	5:05 AM	10.37	
12/5/2014	9:00 AM	10.37	
12/6/2014		10.24	
12/8/2014	5:00 AM	10.09	
12/8/2014	9:00 AM	10.09	

Notes:
- *Reading time signifies the start of monitoring the entire heat extraction system*
- *See "Notes on Heat Extraction System Readings" for comments on reading events*

Date	Time	Flow (GPM)	Notes

Flowmeter: GIW-10

12/8/2014	1:30 PM	10.04	
12/8/2014	5:00 PM	10.07	
12/9/2014	5:00 AM	9.92	
12/9/2014	9:00 AM	9.76	
12/9/2014	1:15 PM	9.74	
12/9/2014	5:25 PM	9.70	
12/10/2014	4:30 AM	9.98	
12/10/2014	5:30 AM	9.62	
12/10/2014	9:15 AM	9.60	
12/10/2014	1:15 PM	9.57	
12/10/2014	4:30 PM	9.98	
12/11/2014	5:00 AM	9.98	
12/11/2014	9:00 AM	9.92	
12/11/2014	1:00 PM	9.76	
12/11/2014	5:00 PM	9.76	
12/12/2014	5:00 AM	9.68	
12/12/2014	9:00 AM	9.64	
12/12/2014	1:00 PM	9.66	
12/12/2014	5:20 PM	9.60	
12/13/2014	9:00 AM	9.03	
12/14/2014	1:00 PM	11.08	
12/15/2014	5:00 AM	11.06	
12/15/2014	9:00 AM	11.08	
12/15/2014	1:00 PM	11.04	
12/15/2014	4:50 PM	11.04	
12/16/2014	4:50 AM	11.00	
12/16/2014	9:05 AM	10.96	
12/16/2014	1:30 PM	10.94	
12/16/2014	4:35 PM	10.94	
12/17/2014	8:15 AM	10.90	
12/17/2014	1:30 PM	10.91	
12/17/2014	5:00 PM	10.89	
12/18/2014	5:20 AM	10.86	
12/18/2014	9:30 AM	10.89	
12/18/2014	1:10 PM	10.86	
12/18/2014	5:00 PM	10.91	
12/19/2014	5:00 AM	10.91	

Notes:
- *Reading time signifies the start of monitoring the entire heat extraction system*
- *See "Notes on Heat Extraction System Readings" for comments on reading events*

Date	Time	Flow (GPM)	Notes

Flowmeter: GIW-10

12/19/2014	8:55 AM	10.91	
12/19/2014	12:55 PM	10.89	
12/19/2014	5:00 PM	10.91	
12/20/2014	2:50 PM	10.96	
12/21/2014	10:30 AM	10.96	
12/22/2014	5:10 AM	10.94	
12/22/2014	9:00 AM	10.96	
12/22/2014	1:00 PM	10.98	
12/22/2014	4:50 PM	10.96	
12/23/2014	5:15 AM	10.94	
12/23/2014	9:05 AM	10.91	
12/23/2014	1:00 PM	10.94	
12/24/2014	9:20 AM	10.86	
12/24/2014	12:20 PM	10.86	
12/24/2014	3:20 PM	10.89	
12/26/2014	9:00 AM	10.89	
12/26/2014	2:00 PM	10.89	
12/29/2014	5:40 AM	10.66	
12/29/2014	9:00 AM	10.68	
12/29/2014	1:00 PM	10.68	
12/30/2014	5:15 AM	10.58	
12/30/2014	9:00 AM	10.54	
12/30/2014	1:00 PM	10.54	
12/31/2014	5:25 AM	10.20	
12/31/2014	9:00 AM	9.98	
12/31/2014	1:00 PM	11.10	
206 readings		Average: 9.30	

Flowmeter: Pump Flowmeter

10/16/2014	2:25 PM	70.42	
10/17/2014	1:05 PM	47.35	
10/18/2014	2:40 PM	63.18	
10/19/2014	8:04 AM	0.00	
10/19/2014	12:20 PM	0.00	
10/20/2014	2:35 PM	0.00	
10/21/2014	10:30 AM	0.00	

Notes:
- *Reading time signifies the start of monitoring the entire heat extraction system*
- *See "Notes on Heat Extraction System Readings" for comments on reading events*

Date	Time	Flow (GPM)	Notes
Flowmeter: Pump Flowmeter			
10/22/2014	9:30 AM	0.00	
10/23/2014	4:50 PM	0.00	
10/24/2014	1:00 PM	102.90	
10/24/2014	4:50 PM	0.00	
10/25/2014	9:01 AM	0.00	
10/25/2014	1:00 PM	0.00	
10/25/2014	5:25 PM	0.00	
10/26/2014	1:15 PM	0.00	
10/26/2014	5:15 PM	0.00	
10/27/2014	9:00 AM	0.00	
10/27/2014	1:00 PM	88.60	
10/27/2014	5:10 PM	95.01	
10/28/2014	9:00 AM	93.29	
10/28/2014	1:00 PM	85.75	
10/28/2014	4:45 PM	86.06	
10/29/2014	7:00 AM	93.00	
10/29/2014	10:10 AM	93.00	
10/29/2014	1:10 PM	90.84	
10/29/2014	4:45 PM	94.72	
10/30/2014	7:00 AM	95.00	
10/30/2014	9:00 AM	93.86	
10/30/2014	1:00 PM	94.72	
10/30/2014	4:30 PM	93.58	
10/31/2014	5:00 AM	92.42	
10/31/2014	9:00 AM	93.25	
10/31/2014	1:00 PM	90.37	
10/31/2014	4:30 PM	90.66	
11/1/2014	5:15 AM	89.21	
11/1/2014	4:50 PM	86.90	
11/2/2014	4:45 AM	86.04	
11/2/2014	9:15 AM	86.04	
11/3/2014	5:00 AM	87.78	
11/3/2014	9:00 AM	85.75	
11/3/2014	1:00 PM	85.46	
11/3/2014	4:45 PM	85.16	
11/4/2014	5:00 AM	86.34	
11/4/2014	9:20 AM	87.40	

Notes:
- *Reading time signifies the start of monitoring the entire heat extraction system*
- *See "Notes on Heat Extraction System Readings" for comments on reading events*

Date	Time	Flow (GPM)	Notes
Flowmeter: Pump Flowmeter			
11/4/2014	1:00 PM	89.50	
11/4/2014	4:30 PM	88.65	
11/5/2014	5:05 AM	88.92	
11/5/2014	9:10 AM	89.50	
11/5/2014	12:50 PM	89.80	
11/5/2014	4:30 PM	90.10	
11/6/2014	9:10 AM	88.64	
11/6/2014	1:05 PM	93.58	
11/6/2014	4:40 PM	91.56	
11/7/2014	9:10 AM	82.88	
11/7/2014	1:10 PM	82.59	
11/8/2014	6:30 AM	81.40	
11/8/2014	12:30 PM	79.97	
11/9/2014	7:42 AM	79.96	
11/10/2014	5:00 AM	79.06	
11/10/2014	9:00 AM	78.20	
11/10/2014	12:50 PM	79.08	
11/11/2014	5:00 AM	76.76	
11/11/2014	9:15 AM	74.17	
11/11/2014	1:15 PM	72.12	
11/11/2014	4:45 PM	70.97	
11/12/2014	5:00 AM	70.40	
11/12/2014	9:00 AM	68.38	
11/12/2014	1:30 PM	75.90	
11/12/2014	4:45 PM	81.42	
11/13/2014	4:50 AM	81.42	
11/13/2014	9:28 AM	81.70	
11/13/2014	1:00 PM	81.13	
11/13/2014	4:50 PM	79.96	
11/14/2014	5:10 AM	79.08	
11/14/2014	9:10 AM	79.38	
11/14/2014	1:00 PM	79.67	
11/15/2014	8:50 AM	88.35	
11/16/2014	5:00 AM	85.75	
11/16/2014	9:00 AM	84.86	
11/17/2014	4:50 AM	75.90	
11/17/2014	9:15 AM	73.87	

Notes:
- *Reading time signifies the start of monitoring the entire heat extraction system*
- *See "Notes on Heat Extraction System Readings" for comments on reading events*

Date	Time	Flow (GPM)	Notes
Flowmeter: Pump Flowmeter			
11/17/2014	1:20 PM	84.88	
11/17/2014	4:30 PM	90.38	
11/18/2014	5:00 AM	91.56	
11/18/2014	9:10 AM	93.25	
11/18/2014	1:00 PM	91.24	
11/18/2014	4:40 PM	91.84	
11/19/2014	5:00 AM	90.66	
11/19/2014	9:00 AM	91.24	
11/19/2014	1:15 PM	89.21	
11/19/2014	4:45 PM	89.50	
11/20/2014	6:00 AM	88.92	
11/20/2014	9:25 AM	88.92	
11/20/2014	1:00 PM	87.49	
11/20/2014	4:50 PM	86.63	
11/21/2014	6:10 AM	86.90	
11/21/2014	9:00 AM	87.20	
11/21/2014	2:40 PM	85.45	
11/22/2014		86.04	
11/24/2014	10:40 AM	90.38	
11/24/2014	1:20 PM	92.13	
11/25/2014	5:00 AM	93.56	
11/25/2014	9:00 AM	92.14	
11/25/2014	1:00 PM	91.25	
11/25/2014	4:30 PM	91.26	
11/26/2014	4:50 AM	91.26	
11/26/2014	9:00 AM	91.58	
11/26/2014	1:00 PM	90.96	
11/27/2014	5:00 AM	91.26	
11/27/2014	9:00 AM	90.67	
11/27/2014	1:00 PM	90.08	
11/28/2014	5:00 AM	89.50	
11/28/2014	9:00 AM	89.21	
11/29/2014	9:00 AM	71.26	
11/29/2014	4:50 PM	70.68	
11/30/2014	8:50 AM	66.62	
11/30/2014	12:50 PM	62.90	
12/1/2014	5:20 AM	31.63	

Notes:
- *Reading time signifies the start of monitoring the entire heat extraction system*
- *See "Notes on Heat Extraction System Readings" for comments on reading events*

Date	Time	Flow (GPM)	Notes
Flowmeter: Pump Flowmeter			
12/1/2014	9:00 AM	31.34	
12/1/2014	12:50 PM	88.64	
12/1/2014	5:00 PM	93.00	
12/2/2014	5:10 AM	91.84	
12/2/2014	9:15 AM	92.42	
12/2/2014	1:15 PM	93.00	
12/2/2014	4:50 PM	92.42	
12/3/2014	5:05 AM	92.72	
12/3/2014	9:00 AM	91.56	
12/3/2014	12:45 PM	92.13	
12/3/2014	5:00 PM	90.96	
12/4/2014	9:00 AM	90.96	
12/4/2014	1:10 PM	90.67	
12/4/2014	5:00 PM	90.67	
12/5/2014	5:05 AM	90.18	
12/5/2014	9:00 AM	90.08	
12/6/2014		89.80	
12/8/2014	5:00 AM	88.06	
12/8/2014	9:00 AM	88.06	
12/8/2014	1:30 PM	88.92	
12/8/2014	5:00 PM	87.18	
12/9/2014	5:00 AM	89.34	
12/9/2014	9:00 AM	86.63	
12/9/2014	1:15 PM	85.45	
12/9/2014	5:25 PM	85.46	
12/10/2014	4:30 AM	84.00	
12/10/2014	5:30 AM	84.58	
12/10/2014	9:15 AM	85.88	
12/10/2014	1:15 PM	84.59	
12/11/2014	5:00 AM	83.42	
12/11/2014	9:00 AM	83.44	
12/11/2014	1:00 PM	81.99	
12/11/2014	5:00 PM	82.56	
12/12/2014	5:00 AM	81.13	
12/12/2014	9:00 AM	80.84	
12/12/2014	1:00 PM	80.54	
12/12/2014	5:20 PM	79.67	

Notes:
- *Reading time signifies the start of monitoring the entire heat extraction system*
- *See "Notes on Heat Extraction System Readings" for comments on reading events*

Date	Time	Flow (GPM)	Notes
Flowmeter: Pump Flowmeter			
12/13/2014	9:00 AM	77.05	
12/14/2014	1:00 PM	91.84	
12/15/2014	5:00 AM	91.54	
12/15/2014	9:00 AM	90.36	
12/15/2014	1:00 PM	90.96	
12/15/2014	4:50 PM	90.33	
12/16/2014	4:50 AM	92.72	
12/16/2014	9:05 AM	91.84	
12/16/2014	1:30 PM	91.33	
12/16/2014	4:35 PM	91.23	
12/17/2014	8:15 AM	91.85	
12/17/2014	1:30 PM	92.72	
12/17/2014	5:00 PM	92.72	
12/18/2014	5:20 AM	91.83	
12/18/2014	9:30 AM	92.72	
12/18/2014	1:10 PM	92.13	
12/18/2014	5:00 PM	90.94	
12/19/2014	5:00 AM	90.67	
12/19/2014	8:55 AM	91.54	
12/19/2014	12:55 PM	90.97	
12/19/2014	5:00 PM	91.54	
12/20/2014	2:50 PM	92.13	
12/21/2014	10:30 AM	90.66	
12/22/2014	5:10 AM	91.83	
12/22/2014	9:00 AM	91.54	
12/22/2014	1:00 PM	91.26	
12/22/2014	4:50 PM	90.97	
12/23/2014	5:15 AM	92.14	
12/23/2014	9:05 AM	92.13	
12/23/2014	1:00 PM	91.84	
12/24/2014	9:20 AM	91.84	
12/24/2014	12:20 PM	91.84	
12/24/2014	3:20 PM	91.56	
12/26/2014	9:00 AM	90.37	
12/26/2014	2:00 PM	90.08	
12/29/2014	5:40 AM	89.50	
12/29/2014	9:00 AM	88.64	

Notes:
- *Reading time signifies the start of monitoring the entire heat extraction system*
- *See "Notes on Heat Extraction System Readings" for comments on reading events*

Date	Time	Flow (GPM)	Notes
Flowmeter: Pump Flowmeter			
12/29/2014	1:00 PM	89.22	
12/30/2014	5:15 AM	88.35	
12/30/2014	9:00 AM	88.64	
12/30/2014	1:00 PM	88.64	
12/31/2014	5:25 AM	85.75	
12/31/2014	9:00 AM	34.28	
12/31/2014	1:00 PM	91.84	
199 readings		Average: 80.53	

Notes:
- Reading time signifies the start of monitoring the entire heat extraction system
- See "Notes on Heat Extraction System Readings" for comments on reading events

APPENDIX M – HEAT EXTRACTION DATA

HEAT EXTRACTION RTD READINGS

Heat Extraction RTD Readings

Bridgeton Landfill

10/13/2014 to 12/31/2014

Date	Time	Temperature (deg F)	Notes
RTD: GIW-02 Hot RTD			
10/13/2014	3:25 PM	154.0	
10/14/2014	2:40 PM	137.2	
10/14/2014	5:45 PM	127.8	
10/15/2014	8:20 AM	133.0	
10/15/2014	1:25 PM	111.5	
10/16/2014	2:25 PM	85.7	
10/17/2014	1:05 PM	84.7	
10/18/2014	2:40 PM	81.5	
10/24/2014	11:05 AM	125.5	
10/24/2014	1:00 PM	116.5	
10/24/2014	4:50 PM	105.8	
10/25/2014	9:01 AM	90.7	
10/25/2014	1:00 PM	93.0	
10/25/2014	5:25 PM	95.0	
10/26/2014	9:20 AM	90.6	
10/26/2014	1:15 PM	92.2	
10/26/2014	5:15 PM	93.7	
10/27/2014	9:00 AM	93.5	
10/27/2014	1:00 PM	89.5	
10/27/2014	5:10 PM	84.7	
10/28/2014	9:00 AM	75.1	
10/28/2014	1:00 PM	73.1	
10/28/2014	4:45 PM	71.3	
10/29/2014	7:00 AM	64.2	
10/29/2014	10:10 AM	63.9	
10/29/2014	1:10 PM	64.4	
10/29/2014	4:45 PM	65.1	
10/30/2014	7:00 AM	59.8	
10/30/2014	9:00 AM	60.2	
10/30/2014	1:00 PM	62.3	
10/30/2014	4:30 PM	63.8	
10/31/2014	5:00 AM	62.5	
10/31/2014	9:00 AM	60.3	
10/31/2014	1:00 PM	58.3	
10/31/2014	4:30 PM	57.7	

Notes:

- Reading time signifies the start of monitoring the entire heat extraction system

- See "Notes on Heat Extraction System Readings" for comments on reading events

Date	Time	Temperature (deg F)	Notes

RTD: GIW-02 Hot RTD

11/1/2014	5:15 AM	51.4	
11/1/2014	4:50 PM	56.1	
11/2/2014	4:45 AM	73.9	
11/2/2014	9:15 AM	76.7	
11/3/2014	5:00 AM	83.9	
11/3/2014	9:00 AM	72.2	
11/3/2014	1:00 PM	71.0	
11/3/2014	4:45 PM	70.7	
11/4/2014	5:00 AM	67.8	
11/4/2014	9:20 AM	65.7	
11/4/2014	1:00 PM	66.0	
11/4/2014	4:30 PM	65.9	
11/5/2014	5:05 AM	60.5	
11/5/2014	9:10 AM	60.2	
11/5/2014	12:50 PM	63.2	
11/5/2014	4:30 PM	64.3	
11/6/2014	9:10 AM	59.2	
11/6/2014	1:05 PM	59.0	
11/6/2014	4:40 PM	58.1	
11/7/2014	9:10 AM	57.1	
11/7/2014	1:10 PM	58.5	
11/8/2014	6:30 AM	59.8	
11/8/2014	12:30 PM	61.1	
11/9/2014	7:42 AM	55.1	
11/10/2014	5:00 AM	61.1	
11/10/2014	9:00 AM	62.1	
11/10/2014	12:50 PM	66.3	
11/11/2014	5:00 AM	65.8	
11/11/2014	9:15 AM	60.0	
11/11/2014	1:15 PM	57.5	
11/11/2014	4:45 PM	55.7	
11/12/2014	5:00 AM	51.7	
11/12/2014	9:00 AM	51.0	
11/12/2014	1:30 PM	53.2	
11/12/2014	4:45 PM	57.2	
11/13/2014	4:50 AM	66.4	
11/13/2014	9:28 AM	67.9	
11/13/2014	1:00 PM	59.1	

Notes:
- *Reading time signifies the start of monitoring the entire heat extraction system*
- *See "Notes on Heat Extraction System Readings" for comments on reading events*

Date	Time	Temperature (deg F)	Notes

RTD: GIW-02 Hot RTD

11/13/2014	4:50 PM	54.2	
11/14/2014	5:10 AM	66.7	
11/14/2014	9:10 AM	70.2	
11/14/2014	1:00 PM	60.3	
11/15/2014	8:50 AM	73.2	
11/16/2014	5:00 AM	70.1	
11/16/2014	9:00 AM	72.3	
11/17/2014	4:50 AM	48.4	
11/17/2014	9:15 AM	48.1	
11/17/2014	1:20 PM	47.7	
11/17/2014	4:30 PM	46.3	
11/18/2014	5:00 AM	57.7	
11/18/2014	9:10 AM	60.2	
11/18/2014	1:00 PM	52.4	
11/18/2014	4:40 PM	49.5	
11/19/2014	5:00 AM	62.9	
11/19/2014	9:00 AM	65.5	
11/19/2014	1:15 PM	57.9	
11/19/2014	4:45 PM	54.0	
11/20/2014	6:00 AM	65.9	
11/20/2014	9:25 AM	68.0	
11/20/2014	1:00 PM	69.9	
11/20/2014	4:50 PM	58.9	
11/21/2014	6:10 AM	68.8	
11/21/2014	9:00 AM	69.5	
11/21/2014	2:40 PM	57.2	
11/22/2014		77.3	
11/24/2014	10:40 AM	79.4	
11/24/2014	1:20 PM	68.6	
11/25/2014	5:00 AM	72.3	
11/25/2014	9:00 AM	65.6	
11/25/2014	1:00 PM	57.9	
11/25/2014	4:30 PM	55.7	
11/26/2014	4:50 AM	69.3	
11/26/2014	9:00 AM	62.5	
11/26/2014	1:00 PM	56.0	
11/27/2014	5:00 AM	48.2	
11/27/2014	9:00 AM	47.6	

Notes:
- *Reading time signifies the start of monitoring the entire heat extraction system*
- *See "Notes on Heat Extraction System Readings" for comments on reading events*

Date	Time	Temperature (deg F)	Notes

RTD: GIW-02 Hot RTD

11/27/2014	1:00 PM	47.7	
11/28/2014	5:00 AM	46.0	
11/28/2014	9:00 AM	47.0	
11/29/2014	9:00 AM	56.3	
11/29/2014	4:50 PM	63.7	
11/30/2014	8:50 AM	66.0	
11/30/2014	12:50 PM	68.7	
12/1/2014	5:20 AM	57.8	
12/1/2014	9:00 AM	58.6	
12/1/2014	12:50 PM	55.7	
12/1/2014	5:00 PM	50.2	
12/2/2014	5:10 AM	63.2	
12/2/2014	9:15 AM	57.7	
12/2/2014	1:15 PM	51.9	
12/2/2014	4:50 PM	50.3	
12/3/2014	5:05 AM	48.2	
12/3/2014	9:00 AM	48.0	
12/3/2014	12:45 PM	50.5	
12/3/2014	5:00 PM	50.9	
12/4/2014	9:00 AM	47.5	
12/4/2014	1:10 PM	48.8	
12/4/2014	5:00 PM	50.3	
12/5/2014	5:05 AM	52.6	
12/5/2014	9:00 AM	53.0	
12/6/2014		52.2	
12/8/2014	5:00 AM	50.7	
12/8/2014	9:00 AM	51.2	
12/8/2014	1:30 PM	53.6	
12/8/2014	5:00 PM	54.6	
12/9/2014	5:00 AM	49.6	
12/9/2014	9:00 AM	48.3	
12/9/2014	1:15 PM	48.4	
12/9/2014	5:25 PM	48.2	
12/10/2014	4:30 AM	47.0	
12/10/2014	5:30 AM	47.4	
12/10/2014	9:15 AM	47.6	
12/10/2014	1:15 PM	47.9	
12/10/2014	4:30 PM	47.0	

Notes:
- *Reading time signifies the start of monitoring the entire heat extraction system*
- *See "Notes on Heat Extraction System Readings" for comments on reading events*

Date	Time	Temperature (deg F)	Notes

RTD: GIW-02 Hot RTD

12/11/2014	5:00 AM	46.0	
12/11/2014	9:00 AM	43.3	
12/11/2014	1:00 PM	46.7	
12/11/2014	5:00 PM	48.0	
12/12/2014	5:00 AM	47.8	
12/12/2014	9:00 AM	48.4	
12/12/2014	1:00 PM	52.3	
12/12/2014	5:20 PM	54.3	
12/13/2014	9:00 AM	51.3	
12/14/2014	1:00 PM	59.9	
12/15/2014	5:00 AM	60.1	
12/15/2014	9:00 AM	59.0	
12/15/2014	1:00 PM	59.8	
12/15/2014	4:50 PM	60.4	
12/16/2014	4:50 AM	54.3	
12/16/2014	9:05 AM	51.7	
12/16/2014	1:30 PM	50.0	
12/16/2014	4:35 PM	48.8	
12/17/2014	8:15 AM	45.2	
12/17/2014	1:30 PM	47.2	
12/17/2014	5:00 PM	47.0	
12/18/2014	5:20 AM	44.6	
12/18/2014	9:30 AM	45.0	
12/18/2014	1:10 PM	45.5	
12/18/2014	5:00 PM	46.1	
12/19/2014	5:00 AM	45.7	
12/19/2014	8:55 AM	45.8	
12/19/2014	12:55 PM	46.4	
12/19/2014	5:00 PM	47.4	
12/20/2014	2:50 PM	49.6	
12/21/2014	10:30 AM	50.0	
12/22/2014	5:10 AM	51.1	
12/22/2014	9:00 AM	50.8	
12/22/2014	1:00 PM	54.0	
12/22/2014	4:50 PM	54.1	
12/23/2014	5:15 AM	53.1	
12/23/2014	9:05 AM	54.3	
12/23/2014	1:00 PM	55.6	

Notes:
- *Reading time signifies the start of monitoring the entire heat extraction system*
- *See "Notes on Heat Extraction System Readings" for comments on reading events*

Date	Time	Temperature (deg F)	Notes

RTD: GIW-02 Hot RTD

12/24/2014	9:20 AM	51.0	
12/24/2014	12:20 PM	51.4	
12/24/2014	3:20 PM	51.0	
12/26/2014	9:00 AM	53.1	
12/26/2014	2:00 PM	58.4	
12/29/2014	5:40 AM	33.1	
12/29/2014	9:00 AM	43.8	
12/29/2014	1:00 PM	46.0	
12/30/2014	5:15 AM	43.9	
12/30/2014	9:00 AM	43.6	
12/30/2014	1:00 PM	44.4	
12/31/2014	5:25 AM	42.1	
12/31/2014	9:00 AM	41.7	
12/31/2014	1:00 PM	65.0	
201 readings		Average: 61.3	

RTD: GIW-03 Hot RTD

10/13/2014	3:25 PM	88.1	
10/14/2014	2:40 PM	125.0	
10/14/2014	5:45 PM	113.3	
10/15/2014	8:20 AM	120.4	
10/15/2014	1:25 PM	91.4	
10/16/2014	2:25 PM	81.7	
10/17/2014	1:05 PM	82.5	
10/18/2014	2:40 PM	78.7	
10/24/2014	11:05 AM	96.8	
10/24/2014	1:00 PM	93.9	
10/24/2014	4:50 PM	92.1	
10/25/2014	9:01 AM	89.0	
10/25/2014	1:00 PM	95.1	
10/25/2014	5:25 PM	99.3	
10/26/2014	9:20 AM	92.1	
10/26/2014	1:15 PM	103.2	
10/26/2014	5:15 PM	103.3	
10/27/2014	9:00 AM	104.2	
10/27/2014	1:00 PM	88.9	
10/27/2014	5:10 PM	84.6	
10/28/2014	9:00 AM	62.3	

Notes:
- *Reading time signifies the start of monitoring the entire heat extraction system*
- *See "Notes on Heat Extraction System Readings" for comments on reading events*

Date	Time	Temperature (deg F)	Notes
RTD: GIW-03 Hot RTD			
10/28/2014	1:00 PM	72.0	
10/28/2014	4:45 PM	69.7	
10/29/2014	7:00 AM	61.6	
10/29/2014	10:10 AM	62.2	
10/29/2014	1:10 PM	64.3	
10/29/2014	4:45 PM	64.5	
10/30/2014	7:00 AM	58.3	
10/30/2014	9:00 AM	59.2	
10/30/2014	1:00 PM	62.5	
10/30/2014	4:30 PM	64.2	
10/31/2014	5:00 AM	61.3	
10/31/2014	9:00 AM	58.0	
10/31/2014	1:00 PM	56.7	
10/31/2014	4:30 PM	56.4	
11/1/2014	5:15 AM	48.7	
11/1/2014	4:50 PM	57.3	
11/2/2014	4:45 AM	76.3	
11/2/2014	9:15 AM	78.9	
11/3/2014	5:00 AM	84.7	
11/3/2014	9:00 AM	67.3	
11/3/2014	1:00 PM	69.1	
11/3/2014	4:45 PM	69.3	
11/4/2014	5:00 AM	67.8	
11/4/2014	9:20 AM	65.5	
11/4/2014	1:00 PM	64.4	
11/4/2014	4:30 PM	64.1	
11/5/2014	5:05 AM	59.1	
11/5/2014	9:10 AM	58.9	
11/5/2014	12:50 PM	63.4	
11/5/2014	4:30 PM	64.3	
11/6/2014	9:10 AM	57.9	
11/6/2014	1:05 PM	57.1	
11/6/2014	4:40 PM	56.0	
11/7/2014	9:10 AM	54.4	
11/7/2014	1:10 PM	58.2	
11/8/2014	6:30 AM	60.0	
11/8/2014	12:30 PM	61.5	
11/9/2014	7:42 AM	55.5	

Notes:
- *Reading time signifies the start of monitoring the entire heat extraction system*
- *See "Notes on Heat Extraction System Readings" for comments on reading events*

Date	Time	Temperature (deg F)	Notes
RTD: GIW-03 Hot RTD			
11/10/2014	5:00 AM	60.8	
11/10/2014	9:00 AM	62.8	
11/10/2014	12:50 PM	69.3	
11/11/2014	5:00 AM	63.4	
11/11/2014	9:15 AM	56.4	
11/11/2014	1:15 PM	54.4	
11/11/2014	4:45 PM	52.7	
11/12/2014	5:00 AM	49.0	
11/12/2014	9:00 AM	49.0	
11/12/2014	1:30 PM	53.9	
11/12/2014	4:45 PM	59.6	
11/13/2014	4:50 AM	67.7	
11/13/2014	9:28 AM	70.2	
11/13/2014	1:00 PM	53.5	
11/13/2014	4:50 PM	49.3	
11/14/2014	5:10 AM	69.1	
11/14/2014	9:10 AM	70.5	
11/14/2014	1:00 PM	54.5	
11/15/2014	8:50 AM	73.4	
11/16/2014	5:00 AM	71.4	
11/16/2014	9:00 AM	73.2	
11/17/2014	4:50 AM	43.9	
11/17/2014	9:15 AM	44.7	
11/17/2014	1:20 PM	43.2	
11/17/2014	4:30 PM	42.7	
11/18/2014	5:00 AM	56.4	
11/18/2014	9:10 AM	58.2	
11/18/2014	1:00 PM	45.3	
11/18/2014	4:40 PM	44.6	
11/19/2014	5:00 AM	60.9	
11/19/2014	9:00 AM	66.1	
11/19/2014	1:15 PM	53.5	
11/19/2014	4:45 PM	48.9	
11/20/2014	6:00 AM	60.8	
11/20/2014	9:25 AM	63.1	
11/20/2014	1:00 PM	69.1	
11/20/2014	4:50 PM	50.7	
11/21/2014	6:10 AM	68.4	

Notes:
- *Reading time signifies the start of monitoring the entire heat extraction system*
- *See "Notes on Heat Extraction System Readings" for comments on reading events*

Date	Time	Temperature (deg F)	Notes
RTD: GIW-03 Hot RTD			
11/21/2014	9:00 AM	69.1	
11/21/2014	2:40 PM	11.9	
11/22/2014		75.6	
11/24/2014	10:40 AM	74.0	
11/24/2014	1:20 PM	58.5	
11/25/2014	5:00 AM	70.9	
11/25/2014	9:00 AM	56.4	
11/25/2014	1:00 PM	51.6	
11/25/2014	4:30 PM	44.7	
11/26/2014	4:50 AM	69.5	
11/26/2014	9:00 AM	55.4	
11/26/2014	1:00 PM	50.1	
11/27/2014	5:00 AM	42.8	
11/27/2014	9:00 AM	43.9	
11/27/2014	1:00 PM	44.6	
11/28/2014	5:00 AM	41.6	
11/28/2014	9:00 AM	41.9	
11/29/2014	9:00 AM	52.7	
11/29/2014	4:50 PM	58.2	
11/30/2014	8:50 AM	62.3	
11/30/2014	12:50 PM	65.7	
12/1/2014	5:20 AM	52.8	
12/1/2014	9:00 AM	44.6	
12/1/2014	12:50 PM	47.9	
12/1/2014	5:00 PM	42.0	
12/2/2014	5:10 AM	63.3	
12/2/2014	9:15 AM	51.2	
12/2/2014	1:15 PM	46.0	
12/2/2014	4:50 PM	45.7	
12/3/2014	5:05 AM	44.8	
12/3/2014	9:00 AM	44.5	
12/3/2014	12:45 PM	46.9	
12/3/2014	5:00 PM	48.1	
12/4/2014	9:00 AM	42.9	
12/4/2014	1:10 PM	44.1	
12/4/2014	5:00 PM	34.3	
12/5/2014	5:05 AM	49.5	
12/5/2014	9:00 AM	45.1	

Notes:
- *Reading time signifies the start of monitoring the entire heat extraction system*
- *See "Notes on Heat Extraction System Readings" for comments on reading events*

Date	Time	Temperature (deg F)	Notes
RTD: GIW-03 Hot RTD			
12/6/2014		47.0	
12/8/2014	9:00 AM	46.3	
12/8/2014	5:00 PM		RTD malfunction
12/9/2014	5:00 AM		RTD malfunction
12/9/2014	9:00 AM		RTD malfunction
12/9/2014	1:15 PM		RTD malfunction
12/9/2014	5:25 PM		RTD malfunction
12/10/2014	4:30 AM	48.4	
12/10/2014	5:30 AM		RTD malfunction
12/10/2014	9:15 AM		RTD malfunction
12/10/2014	1:15 PM		RTD malfunction
12/10/2014	4:30 PM	48.4	
12/11/2014	5:00 AM	43.4	
12/11/2014	9:00 AM	45.6	
12/11/2014	1:00 PM		
12/11/2014	5:00 PM		
12/12/2014	5:00 AM	48.3	
12/12/2014	9:00 AM		
12/12/2014	1:00 PM	52.3	
12/12/2014	5:20 PM	54.0	
12/13/2014	9:00 AM	50.7	
12/14/2014	1:00 PM	62.1	
12/15/2014	5:00 AM	56.9	
12/15/2014	9:00 AM	56.8	
12/15/2014	1:00 PM	58.6	
12/15/2014	4:50 PM	59.6	
12/16/2014	4:50 AM	51.4	
12/22/2014	4:50 PM	56.0	
12/23/2014	5:15 AM	52.4	
12/23/2014	9:05 AM	51.3	
12/23/2014	1:00 PM	54.2	
12/24/2014	9:20 AM	48.3	
12/24/2014	12:20 PM	49.0	
12/24/2014	3:20 PM	47.7	
12/26/2014	9:00 AM	52.4	
12/29/2014	5:40 AM	40.7	
12/29/2014	9:00 AM	42.3	
12/29/2014	1:00 PM	45.7	

Notes:
- *Reading time signifies the start of monitoring the entire heat extraction system*
- *See "Notes on Heat Extraction System Readings" for comments on reading events*

Date	Time	Temperature (deg F)	Notes
RTD: GIW-03 Hot RTD			
12/30/2014	5:15 AM	41.4	
12/30/2014	9:00 AM	40.8	
12/30/2014	1:00 PM	39.8	
12/31/2014	5:25 AM	35.8	
12/31/2014	9:00 AM	40.5	
12/31/2014	1:00 PM	47.7	
179 readings		Average: 60.3	
RTD: GIW-04 Hot RTD			
10/13/2014	3:25 PM	70.8	
10/14/2014	2:40 PM	139.1	
10/14/2014	5:45 PM	131.1	
10/15/2014	8:20 AM	139.1	
10/15/2014	1:25 PM	117.1	
10/16/2014	2:25 PM	86.6	
10/17/2014	1:05 PM	86.5	
10/18/2014	2:40 PM	84.0	
10/24/2014	11:05 AM	132.5	
10/24/2014	1:00 PM	115.6	
10/24/2014	4:50 PM	114.4	
10/25/2014	9:01 AM	104.2	
10/25/2014	1:00 PM	106.8	
10/25/2014	5:25 PM	106.1	
10/26/2014	9:20 AM	103.5	
10/26/2014	1:15 PM	111.4	
10/26/2014	5:15 PM	114.0	
10/27/2014	9:00 AM	114.5	
10/27/2014	1:00 PM	109.1	
10/27/2014	5:10 PM	95.0	
10/28/2014	9:00 AM	77.7	
10/28/2014	1:00 PM	75.7	
10/28/2014	4:45 PM	73.9	
10/29/2014	7:00 AM	66.0	
10/29/2014	10:10 AM	60.9	
10/29/2014	1:10 PM	79.4	
10/29/2014	4:45 PM	69.8	
10/30/2014	7:00 AM	62.7	
10/30/2014	9:00 AM	62.8	

Notes:
- *Reading time signifies the start of monitoring the entire heat extraction system*
- *See "Notes on Heat Extraction System Readings" for comments on reading events*

Date	Time	Temperature (deg F)	Notes

RTD: GIW-04 Hot RTD

10/30/2014	1:00 PM	64.8	
10/30/2014	4:30 PM	66.3	
10/31/2014	5:00 AM	64.8	
10/31/2014	9:00 AM	62.5	
10/31/2014	1:00 PM	61.1	
10/31/2014	4:30 PM	60.6	
11/1/2014	5:15 AM	54.0	
11/1/2014	4:50 PM	59.1	
11/2/2014	4:45 AM	76.0	
11/2/2014	9:15 AM	78.3	
11/3/2014	5:00 AM	85.2	
11/3/2014	9:00 AM	74.3	
11/3/2014	1:00 PM	73.3	
11/3/2014	4:45 PM	72.8	
11/4/2014	5:00 AM	68.6	
11/4/2014	9:20 AM	66.0	
11/4/2014	1:00 PM	65.5	
11/4/2014	4:30 PM	68.5	
11/5/2014	5:05 AM	63.3	
11/5/2014	9:10 AM	62.9	
11/5/2014	12:50 PM	66.0	
11/5/2014	4:30 PM	67.0	
11/6/2014	9:10 AM	61.9	
11/6/2014	1:05 PM	61.2	
11/6/2014	4:40 PM	60.4	
11/7/2014	9:10 AM	56.1	
11/7/2014	1:10 PM	58.5	
11/8/2014	6:30 AM	59.6	
11/8/2014	12:30 PM	61.0	
11/9/2014	7:42 AM	54.2	
11/10/2014	5:00 AM	60.4	
11/10/2014	9:00 AM	61.6	
11/10/2014	12:50 PM	66.5	
11/11/2014	5:00 AM	64.6	
11/11/2014	9:15 AM	60.2	
11/11/2014	1:15 PM	58.5	
11/11/2014	4:45 PM	56.8	
11/12/2014	5:00 AM	53.0	

Notes:
- *Reading time signifies the start of monitoring the entire heat extraction system*
- *See "Notes on Heat Extraction System Readings" for comments on reading events*

Date	Time	Temperature (deg F)	Notes

RTD: GIW-04 Hot RTD

11/12/2014	9:00 AM	52.3	
11/12/2014	1:30 PM	54.7	
11/12/2014	4:45 PM	58.3	
11/13/2014	4:50 AM	66.9	
11/13/2014	9:28 AM	68.9	
11/13/2014	1:00 PM	59.3	
11/13/2014	4:50 PM	54.5	
11/14/2014	5:10 AM	67.5	
11/14/2014	9:10 AM	70.8	
11/14/2014	1:00 PM	60.8	
11/15/2014	8:50 AM	74.7	
11/16/2014	5:00 AM	72.2	
11/16/2014	9:00 AM	74.0	
11/17/2014	4:50 AM	53.6	
11/17/2014	9:15 AM	53.6	
11/17/2014	1:20 PM	53.4	
11/17/2014	4:30 PM	50.6	
11/18/2014	5:00 AM	60.6	
11/18/2014	9:10 AM	62.8	
11/18/2014	1:00 PM	56.2	
11/18/2014	4:40 PM	54.1	
11/19/2014	5:00 AM	65.7	
11/19/2014	9:00 AM	68.0	
11/19/2014	1:15 PM	61.7	
11/19/2014	4:45 PM	58.3	
11/20/2014	6:00 AM	68.6	
11/20/2014	9:25 AM	70.8	
11/20/2014	1:00 PM	73.5	
11/20/2014	4:50 PM	63.5	
11/21/2014	6:10 AM	71.9	
11/21/2014	9:00 AM	72.7	
11/21/2014	2:40 PM	62.5	
11/22/2014		80.4	
11/24/2014	10:40 AM	83.7	
11/24/2014	1:20 PM	72.6	
11/25/2014	5:00 AM	75.6	
11/25/2014	9:00 AM	69.4	
11/25/2014	1:00 PM	62.3	

Notes:
- *Reading time signifies the start of monitoring the entire heat extraction system*
- *See "Notes on Heat Extraction System Readings" for comments on reading events*

Date	Time	Temperature (deg F)	Notes

RTD: GIW-04 Hot RTD

11/25/2014	4:30 PM	60.7	
11/26/2014	4:50 AM	72.5	
11/26/2014	9:00 AM	66.5	
11/26/2014	1:00 PM	60.3	
11/27/2014	5:00 AM	52.5	
11/27/2014	9:00 AM	51.5	
11/27/2014	1:00 PM	52.3	
11/28/2014	5:00 AM	51.8	
11/28/2014	9:00 AM	51.4	
11/29/2014	9:00 AM	61.1	
11/29/2014	4:50 PM	68.3	
11/30/2014	8:50 AM	70.8	
11/30/2014	12:50 PM	73.7	
12/1/2014	5:20 AM	50.1	
12/1/2014	9:00 AM	55.3	
12/1/2014	12:50 PM	65.8	
12/1/2014	5:00 PM	56.5	
12/2/2014	5:10 AM	67.1	
12/2/2014	9:15 AM	62.3	
12/2/2014	1:15 PM	56.4	
12/2/2014	4:50 PM	55.0	
12/3/2014	5:05 AM	52.8	
12/3/2014	9:00 AM	52.6	
12/3/2014	12:45 PM	55.0	
12/3/2014	5:00 PM	55.2	
12/4/2014	9:00 AM	51.8	
12/4/2014	1:10 PM	51.9	
12/4/2014	5:00 PM	54.0	
12/5/2014	5:05 AM	54.2	
12/5/2014	9:00 AM	55.7	
12/6/2014		56.3	
12/8/2014	5:00 AM	54.7	
12/8/2014	9:00 AM	55.3	
12/8/2014	1:30 PM	57.7	
12/8/2014	5:00 PM	58.6	
12/9/2014	5:00 AM	53.7	
12/9/2014	9:00 AM	52.6	
12/9/2014	1:15 PM	52.8	

Notes:
- *Reading time signifies the start of monitoring the entire heat extraction system*
- *See "Notes on Heat Extraction System Readings" for comments on reading events*

Date	Time	Temperature (deg F)	Notes

RTD: GIW-04 Hot RTD

12/9/2014	5:25 PM	52.7	
12/10/2014	4:30 AM	52.1	
12/10/2014	5:30 AM	52.0	
12/10/2014	9:15 AM	52.1	
12/10/2014	1:15 PM	52.4	
12/10/2014	4:30 PM	52.1	
12/11/2014	5:00 AM	50.7	
12/11/2014	9:00 AM	50.7	
12/11/2014	1:00 PM	47.0	
12/11/2014	5:00 PM	52.2	
12/12/2014	5:00 AM	52.4	
12/12/2014	9:00 AM	52.7	
12/12/2014	1:00 PM		
12/12/2014	5:20 PM	58.2	
12/13/2014	9:00 AM	57.8	
12/14/2014	1:00 PM	65.8	
12/15/2014	5:00 AM	63.9	
12/15/2014	9:00 AM	62.8	
12/15/2014	1:00 PM	63.5	
12/15/2014	4:50 PM	64.2	
12/16/2014	4:50 AM	58.3	
12/16/2014	9:05 AM	55.9	
12/16/2014	1:30 PM	54.1	
12/16/2014	4:35 PM	53.0	
12/17/2014	8:15 AM	49.8	
12/17/2014	1:30 PM	51.5	
12/17/2014	5:00 PM	51.1	
12/18/2014	5:20 AM	48.8	
12/18/2014	9:30 AM	48.9	
12/18/2014	1:10 PM	50.0	
12/18/2014	5:00 PM	50.5	
12/19/2014	5:00 AM	49.7	
12/19/2014	8:55 AM	50.0	
12/19/2014	12:55 PM	51.1	
12/19/2014	5:00 PM	51.3	
12/20/2014	2:50 PM	53.2	
12/21/2014	10:30 AM	54.2	
12/22/2014	5:10 AM	54.6	

Notes:
- *Reading time signifies the start of monitoring the entire heat extraction system*
- *See "Notes on Heat Extraction System Readings" for comments on reading events*

Date	Time	Temperature (deg F)	Notes

RTD: GIW-04 Hot RTD

12/22/2014	9:00 AM	53.0	
12/22/2014	1:00 PM	56.0	
12/22/2014	4:50 PM	56.1	
12/23/2014	5:15 AM	58.4	
12/23/2014	9:05 AM	58.4	
12/23/2014	1:00 PM	59.0	
12/24/2014	9:20 AM	55.4	
12/24/2014	12:20 PM	54.6	
12/24/2014	3:20 PM	49.0	
12/26/2014	9:00 AM	56.0	
12/26/2014	2:00 PM	61.4	
12/29/2014	5:40 AM	48.1	
12/29/2014	9:00 AM	48.8	
12/29/2014	1:00 PM	55.8	
12/30/2014	5:15 AM	48.1	
12/30/2014	9:00 AM	47.3	
12/30/2014	1:00 PM	48.9	
12/31/2014	5:25 AM	45.1	
12/31/2014	9:00 AM	41.5	
12/31/2014	1:00 PM	50.4	
201 readings		Average: 64.7	

RTD: GIW-05 Hot RTD

10/13/2014	3:25 PM	111.0	
10/14/2014	2:40 PM	109.1	
10/14/2014	5:45 PM	98.8	
10/15/2014	8:20 AM	96.5	
10/15/2014	1:25 PM	89.0	
10/16/2014	2:25 PM	76.9	
10/17/2014	1:05 PM	73.5	
10/18/2014	2:40 PM	69.0	
10/24/2014	11:05 AM	87.0	
10/24/2014	1:00 PM	83.9	
10/24/2014	4:50 PM	81.0	
10/25/2014	9:01 AM	77.1	
10/25/2014	1:00 PM	83.5	
10/25/2014	5:25 PM	87.1	
10/26/2014	9:20 AM	82.0	

Notes:
- *Reading time signifies the start of monitoring the entire heat extraction system*
- *See "Notes on Heat Extraction System Readings" for comments on reading events*

Date	Time	Temperature (deg F)	Notes
RTD: GIW-05 Hot RTD			
10/26/2014	1:15 PM	89.4	
10/26/2014	5:15 PM	91.4	
10/27/2014	9:00 AM	87.8	
10/27/2014	1:00 PM	81.4	
10/27/2014	5:10 PM	78.1	
10/28/2014	9:00 AM	65.6	
10/28/2014	1:00 PM	70.9	
10/28/2014	4:45 PM	89.0	
10/29/2014	7:00 AM	55.6	
10/29/2014	10:10 AM	56.5	
10/29/2014	1:10 PM	57.6	
10/29/2014	4:45 PM	59.3	
10/30/2014	7:00 AM	51.6	
10/30/2014	9:00 AM	53.4	
10/30/2014	1:00 PM	56.9	
10/30/2014	4:30 PM	58.6	
10/31/2014	5:00 AM	55.9	
10/31/2014	9:00 AM	53.0	
10/31/2014	1:00 PM	51.7	
10/31/2014	4:30 PM	51.4	
11/1/2014	5:15 AM	43.7	
11/1/2014	4:50 PM	51.7	
11/2/2014	4:45 AM	71.1	
11/2/2014	9:15 AM	73.3	
11/3/2014	5:00 AM	78.8	
11/3/2014	9:00 AM	62.1	
11/3/2014	1:00 PM	64.4	
11/3/2014	4:45 PM	64.3	
11/4/2014	5:00 AM	60.0	
11/4/2014	9:20 AM	60.2	
11/4/2014	1:00 PM	60.3	
11/4/2014	4:30 PM	59.0	
11/5/2014	5:05 AM	53.8	
11/5/2014	9:10 AM	53.6	
11/5/2014	12:50 PM	58.5	
11/5/2014	4:30 PM	59.3	
11/6/2014	9:10 AM	53.1	
11/6/2014	1:05 PM	52.2	

Notes:
- *Reading time signifies the start of monitoring the entire heat extraction system*
- *See "Notes on Heat Extraction System Readings" for comments on reading events*

Date	Time	Temperature (deg F)	Notes
RTD: GIW-05 Hot RTD			
11/6/2014	4:40 PM	51.8	
11/7/2014	9:10 AM	48.9	
11/7/2014	1:10 PM	52.8	
11/8/2014	6:30 AM	53.1	
11/8/2014	12:30 PM	54.7	
11/9/2014	7:42 AM	46.4	
11/10/2014	5:00 AM	53.5	
11/10/2014	9:00 AM	55.7	
11/10/2014	12:50 PM	62.0	
11/11/2014	5:00 AM	56.3	
11/11/2014	9:15 AM	49.2	
11/11/2014	1:15 PM	47.0	
11/11/2014	4:45 PM	45.2	
11/12/2014	5:00 AM	41.6	
11/12/2014	9:00 AM	41.1	
11/12/2014	1:30 PM	45.1	
11/12/2014	4:45 PM	51.9	
11/13/2014	4:50 AM	60.4	
11/13/2014	9:28 AM	63.3	
11/13/2014	1:00 PM	47.3	
11/13/2014	4:50 PM	42.5	
11/14/2014	5:10 AM	61.5	
11/14/2014	9:10 AM	65.3	
11/14/2014	1:00 PM	49.0	
11/15/2014	8:50 AM	68.6	
11/16/2014	5:00 AM	66.3	
11/16/2014	9:00 AM	67.5	
11/17/2014	4:50 AM	38.9	
11/17/2014	9:15 AM	39.8	
11/17/2014	1:20 PM	40.7	
11/17/2014	4:30 PM	38.6	
11/18/2014	5:00 AM	52.6	
11/18/2014	9:10 AM	55.4	
11/18/2014	1:00 PM	43.6	
11/18/2014	4:40 PM	41.3	
11/19/2014	5:00 AM	58.5	
11/19/2014	9:00 AM	61.8	
11/19/2014	1:15 PM	49.7	

Notes:
- *Reading time signifies the start of monitoring the entire heat extraction system*
- *See "Notes on Heat Extraction System Readings" for comments on reading events*

Date	Time	Temperature (deg F)	Notes
RTD: GIW-05 Hot RTD			
11/19/2014	4:45 PM	45.4	
11/20/2014	6:00 AM	61.5	
11/20/2014	9:25 AM	63.9	
11/20/2014	1:00 PM	66.8	
11/20/2014	4:50 PM	49.3	
11/21/2014	6:10 AM	64.3	
11/21/2014	9:00 AM	65.3	
11/21/2014	2:40 PM	48.2	
11/22/2014		74.0	
11/24/2014	10:40 AM	72.4	
11/24/2014	1:20 PM	55.9	
11/25/2014	5:00 AM	66.8	
11/25/2014	9:00 AM	55.2	
11/25/2014	1:00 PM	48.6	
11/25/2014	4:30 PM	47.4	
11/26/2014	4:50 AM	65.2	
11/26/2014	9:00 AM	53.5	
11/26/2014	1:00 PM	46.4	
11/27/2014	5:00 AM	41.0	
11/27/2014	9:00 AM	40.7	
11/27/2014	1:00 PM	42.0	
11/28/2014	5:00 AM	39.6	
11/28/2014	9:00 AM	41.2	
11/29/2014	9:00 AM	50.8	
11/29/2014	4:50 PM	60.2	
11/30/2014	8:50 AM	61.0	
11/30/2014	12:50 PM	64.8	
12/1/2014	5:20 AM	49.1	
12/1/2014	9:00 AM	50.1	
12/1/2014	12:50 PM	46.7	
12/1/2014	5:00 PM	41.8	
12/2/2014	5:10 AM	59.5	
12/2/2014	9:15 AM	50.1	
12/2/2014	1:15 PM	43.7	
12/2/2014	4:50 PM	42.7	
12/3/2014	5:05 AM	41.8	
12/3/2014	9:00 AM	41.8	
12/3/2014	12:45 PM	46.2	

Notes:
- *Reading time signifies the start of monitoring the entire heat extraction system*
- *See "Notes on Heat Extraction System Readings" for comments on reading events*

Date	Time	Temperature (deg F)	Notes
RTD: GIW-05 Hot RTD			
12/3/2014	5:00 PM	45.7	
12/4/2014	9:00 AM	42.4	
12/4/2014	1:10 PM	43.8	
12/4/2014	5:00 PM	45.4	
12/5/2014	5:05 AM	47.8	
12/5/2014	9:00 AM	48.3	
12/6/2014		46.3	
12/8/2014	5:00 AM	45.2	
12/8/2014	9:00 AM	46.3	
12/8/2014	1:30 PM	49.5	
12/8/2014	5:00 PM	50.0	
12/9/2014	5:00 AM	42.9	
12/9/2014	9:00 AM	41.9	
12/9/2014	1:15 PM	42.7	
12/9/2014	5:25 PM	42.4	
12/10/2014	4:30 AM	41.9	
12/10/2014	5:30 AM	41.7	
12/10/2014	9:15 AM	42.1	
12/10/2014	1:15 PM	42.2	
12/10/2014	4:30 PM	41.9	
12/11/2014	5:00 AM	39.0	
12/11/2014	9:00 AM	35.0	
12/11/2014	1:00 PM	42.3	
12/11/2014	5:00 PM	42.4	
12/12/2014	5:00 AM	41.4	
12/12/2014	9:00 AM	41.8	
12/12/2014	1:00 PM	48.6	
12/12/2014	5:20 PM	50.1	
12/13/2014	9:00 AM	47.5	
12/14/2014	1:00 PM	58.3	
12/15/2014	5:00 AM	55.0	
12/15/2014	9:00 AM	53.9	
12/15/2014	1:00 PM	53.5	
12/15/2014	4:50 PM	55.4	
12/16/2014	4:50 AM	48.0	
12/16/2014	9:05 AM	45.1	
12/16/2014	1:30 PM	43.3	
12/16/2014	4:35 PM	42.3	

Notes:
- *Reading time signifies the start of monitoring the entire heat extraction system*
- *See "Notes on Heat Extraction System Readings" for comments on reading events*

Date	Time	Temperature (deg F)	Notes
RTD: GIW-05 Hot RTD			
12/17/2014	8:15 AM	39.2	
12/17/2014	1:30 PM	42.4	
12/17/2014	5:00 PM	41.4	
12/18/2014	5:20 AM	39.0	
12/18/2014	9:30 AM	39.4	
12/18/2014	1:10 PM	40.6	
12/18/2014	5:00 PM	35.3	
12/19/2014	5:00 AM	39.7	
12/19/2014	8:55 AM	40.2	
12/19/2014	12:55 PM	41.6	
12/19/2014	5:00 PM	41.2	
12/20/2014	2:50 PM	45.4	
12/21/2014	10:30 AM	45.4	
12/22/2014	5:10 AM	45.9	
12/22/2014	9:00 AM	46.3	
12/22/2014	1:00 PM	48.8	
12/22/2014	4:50 PM	49.1	
12/23/2014	5:15 AM	47.2	
12/23/2014	9:05 AM	48.3	
12/23/2014	1:00 PM	50.3	
12/24/2014	9:20 AM	45.8	
12/24/2014	12:20 PM	45.3	
12/24/2014	3:20 PM	44.9	
12/26/2014	9:00 AM	48.5	
12/26/2014	2:00 PM	54.0	
12/29/2014	5:40 AM	32.7	
12/29/2014	9:00 AM	39.0	
12/29/2014	1:00 PM	42.5	
12/30/2014	5:15 AM	38.5	
12/30/2014	9:00 AM	37.7	
12/30/2014	1:00 PM	39.5	
12/31/2014	5:25 AM	35.4	
12/31/2014	9:00 AM	35.1	
12/31/2014	1:00 PM	42.3	
201 readings		Average: 54.0	

RTD: GIW-06 Hot RTD

10/13/2014	3:25 PM	108.2	

Notes:
- *Reading time signifies the start of monitoring the entire heat extraction system*
- *See "Notes on Heat Extraction System Readings" for comments on reading events*

Date	Time	Temperature (deg F)	Notes

RTD: GIW-06 Hot RTD

10/14/2014	2:40 PM	98.8	
10/14/2014	5:45 PM	90.9	
10/15/2014	8:20 AM	86.7	
10/15/2014	1:25 PM	79.7	
10/16/2014	2:25 PM	74.0	
10/17/2014	1:05 PM	71.6	
10/18/2014	2:40 PM	67.0	
10/24/2014	11:05 AM	80.7	
10/24/2014	1:00 PM	79.6	
10/24/2014	4:50 PM	76.9	
10/25/2014	9:01 AM	73.9	
10/25/2014	1:00 PM	80.3	
10/25/2014	5:25 PM	82.0	
10/26/2014	9:20 AM	74.3	
10/26/2014	1:15 PM	79.2	
10/26/2014	5:15 PM	80.9	
10/27/2014	9:00 AM	79.3	
10/27/2014	1:00 PM	79.3	
10/27/2014	5:10 PM	76.3	
10/28/2014	9:00 AM	64.1	
10/28/2014	1:00 PM	63.7	
10/28/2014	4:45 PM	61.7	
10/29/2014	7:00 AM	53.9	
10/29/2014	10:10 AM	55.0	
10/29/2014	1:10 PM	56.3	
10/29/2014	4:45 PM	57.8	
10/30/2014	7:00 AM	51.4	
10/30/2014	9:00 AM	52.2	
10/30/2014	1:00 PM	55.9	
10/30/2014	4:30 PM	57.5	
10/31/2014	5:00 AM	54.8	
10/31/2014	9:00 AM	51.3	
10/31/2014	1:00 PM	50.0	
10/31/2014	4:30 PM	49.9	
11/1/2014	5:15 AM	42.0	
11/1/2014	4:50 PM	51.0	
11/2/2014	4:45 AM	70.6	
11/2/2014	9:15 AM	72.5	

Notes:
- *Reading time signifies the start of monitoring the entire heat extraction system*
- *See "Notes on Heat Extraction System Readings" for comments on reading events*

Date	Time	Temperature (deg F)	Notes

RTD: GIW-06 Hot RTD

11/3/2014	5:00 AM	78.8	
11/3/2014	9:00 AM	60.7	
11/3/2014	1:00 PM	63.2	
11/3/2014	4:45 PM	65.5	
11/4/2014	5:00 AM	62.3	
11/4/2014	9:20 AM	58.2	
11/4/2014	1:00 PM	58.5	
11/4/2014	4:30 PM	58.4	
11/5/2014	5:05 AM	52.9	
11/5/2014	9:10 AM	52.7	
11/5/2014	12:50 PM	57.7	
11/5/2014	4:30 PM	58.8	
11/6/2014	9:10 AM	52.3	
11/6/2014	1:05 PM	51.8	
11/6/2014	4:40 PM	51.3	
11/7/2014	9:10 AM	48.1	
11/7/2014	1:10 PM	51.6	
11/8/2014	6:30 AM	52.6	
11/8/2014	12:30 PM	52.3	
11/9/2014	7:42 AM	45.3	
11/10/2014	5:00 AM	52.8	
11/10/2014	9:00 AM	55.3	
11/10/2014	12:50 PM	61.5	
11/11/2014	5:00 AM	55.4	
11/11/2014	9:15 AM	48.3	
11/11/2014	1:15 PM	46.0	
11/11/2014	4:45 PM	44.2	
11/12/2014	5:00 AM	40.6	
11/12/2014	9:00 AM	40.2	
11/12/2014	1:30 PM	44.7	
11/12/2014	4:45 PM	51.7	
11/13/2014	4:50 AM	61.0	
11/13/2014	9:28 AM	63.4	
11/13/2014	1:00 PM	46.5	
11/13/2014	4:50 PM	41.8	
11/14/2014	5:10 AM	62.2	
11/14/2014	9:10 AM	66.0	
11/14/2014	1:00 PM	48.2	

Notes:
- *Reading time signifies the start of monitoring the entire heat extraction system*
- *See "Notes on Heat Extraction System Readings" for comments on reading events*

Date	Time	Temperature (deg F)	Notes

RTD: GIW-06 Hot RTD

11/15/2014	8:50 AM	69.0	
11/16/2014	9:00 AM	68.2	
11/17/2014	4:50 AM	39.6	
11/17/2014	9:15 AM	39.6	
11/17/2014	1:20 PM	40.2	
11/17/2014	4:30 PM	54.5	
11/18/2014	5:00 AM	52.8	
11/18/2014	9:10 AM	55.7	
11/18/2014	1:00 PM	43.0	
11/18/2014	4:40 PM	40.4	
11/19/2014	5:00 AM	58.9	
11/19/2014	9:00 AM	62.1	
11/19/2014	1:15 PM	49.2	
11/19/2014	4:45 PM	44.8	
11/20/2014	6:00 AM	61.5	
11/20/2014	9:25 AM	64.3	
11/20/2014	1:00 PM	68.1	
11/20/2014	4:50 PM	48.0	
11/21/2014	6:10 AM	63.9	
11/21/2014	9:00 AM	64.8	
11/21/2014	2:40 PM	47.2	
11/22/2014		74.3	
11/24/2014	10:40 AM	72.6	
11/24/2014	1:20 PM	54.8	
11/25/2014	5:00 AM	67.0	
11/25/2014	9:00 AM	54.6	
11/25/2014	1:00 PM	47.3	
11/25/2014	4:30 PM	46.6	
11/26/2014	4:50 AM	65.0	
11/26/2014	9:00 AM	52.3	
11/26/2014	1:00 PM	45.4	
11/27/2014	5:00 AM	39.9	
11/27/2014	9:00 AM	39.7	
11/27/2014	1:00 PM	40.8	
11/28/2014	5:00 AM	38.7	
11/28/2014	9:00 AM	40.7	
11/29/2014	9:00 AM	50.4	
11/29/2014	4:50 PM	60.0	

Notes:
- *Reading time signifies the start of monitoring the entire heat extraction system*
- *See "Notes on Heat Extraction System Readings" for comments on reading events*

Date	Time	Temperature (deg F)	Notes

RTD: GIW-06 Hot RTD

11/30/2014	8:50 AM	60.6	
11/30/2014	12:50 PM	64.4	
12/1/2014	5:20 AM	46.5	
12/1/2014	9:00 AM	46.3	
12/1/2014	12:50 PM	45.8	
12/1/2014	5:00 PM	41.0	
12/2/2014	5:10 AM	59.8	
12/2/2014	9:15 AM	49.0	
12/2/2014	1:15 PM	43.0	
12/2/2014	4:50 PM	42.2	
12/3/2014	5:05 AM	41.2	
12/3/2014	9:00 AM	41.7	
12/3/2014	12:45 PM	45.8	
12/3/2014	5:00 PM	45.2	
12/4/2014	9:00 AM	47.3	
12/4/2014	1:10 PM	43.9	
12/4/2014	5:00 PM	44.9	
12/5/2014	5:05 AM	47.2	
12/5/2014	9:00 AM	47.9	
12/6/2014		45.7	
12/8/2014	5:00 AM	44.9	
12/8/2014	9:00 AM	46.0	
12/8/2014	1:30 PM	49.2	
12/8/2014	5:00 PM	49.7	
12/9/2014	5:00 AM	42.0	
12/9/2014	9:00 AM	41.1	
12/9/2014	1:15 PM	42.0	
12/9/2014	5:25 PM	42.1	
12/10/2014	4:30 AM	41.6	
12/10/2014	5:30 AM	41.3	
12/10/2014	9:15 AM	41.4	
12/10/2014	1:15 PM	41.9	
12/10/2014	4:30 PM	41.6	
12/11/2014	5:00 AM	38.3	
12/11/2014	9:00 AM	8.0	
12/11/2014	1:00 PM	41.7	
12/11/2014	5:00 PM	41.8	
12/12/2014	5:00 AM	41.7	

Notes:
- *Reading time signifies the start of monitoring the entire heat extraction system*
- *See "Notes on Heat Extraction System Readings" for comments on reading events*

Date	Time	Temperature (deg F)	Notes

RTD: GIW-06 Hot RTD

12/12/2014	9:00 AM	42.5	
12/12/2014	1:00 PM	48.7	
12/12/2014	5:20 PM	50.1	
12/13/2014	9:00 AM	46.6	
12/14/2014	1:00 PM	58.9	
12/15/2014	5:00 AM	54.7	
12/15/2014	9:00 AM	53.5	
12/15/2014	1:00 PM	53.8	
12/15/2014	4:50 PM	55.6	
12/16/2014	4:50 AM	47.8	
12/16/2014	9:05 AM	44.8	
12/16/2014	1:30 PM	42.9	
12/16/2014	4:35 PM	42.1	
12/17/2014	8:15 AM	39.0	
12/17/2014	1:30 PM	41.9	
12/17/2014	5:00 PM	41.0	
12/18/2014	5:20 AM	38.7	
12/18/2014	9:30 AM	38.9	
12/18/2014	1:10 PM	40.5	
12/18/2014	5:00 PM	40.8	
12/19/2014	5:00 AM	39.8	
12/19/2014	8:55 AM	39.8	
12/19/2014	12:55 PM	41.8	
12/19/2014	5:00 PM	41.4	
12/20/2014	2:50 PM	45.2	
12/21/2014	10:30 AM	44.3	
12/22/2014	5:10 AM	45.2	
12/22/2014	9:00 AM	45.8	
12/22/2014	1:00 PM	49.8	
12/22/2014	4:50 PM	49.9	
12/23/2014	5:15 AM	46.6	
12/23/2014	9:05 AM	48.6	
12/23/2014	1:00 PM	50.2	
12/24/2014	9:20 AM	44.8	
12/24/2014	12:20 PM	45.8	
12/24/2014	3:20 PM	44.9	
12/26/2014	9:00 AM	47.7	
12/26/2014	2:00 PM	55.7	

Notes:
- *Reading time signifies the start of monitoring the entire heat extraction system*
- *See "Notes on Heat Extraction System Readings" for comments on reading events*

Date	Time	Temperature (deg F)	Notes

RTD: GIW-06 Hot RTD

12/29/2014	5:40 AM	37.0	
12/29/2014	9:00 AM	38.9	
12/29/2014	1:00 PM	41.4	
12/30/2014	5:15 AM	37.5	
12/30/2014	9:00 AM	37.1	
12/30/2014	1:00 PM	38.6	
12/31/2014	5:25 AM	32.7	
12/31/2014	9:00 AM	34.1	
12/31/2014	1:00 PM	44.0	
200 readings		Average: 52.8	

RTD: GIW-07 Hot RTD

10/13/2014	3:25 PM	146.5	
10/14/2014	2:40 PM	142.8	
10/14/2014	5:45 PM	136.7	
10/15/2014	8:20 AM	127.8	
10/15/2014	1:25 PM	111.5	
10/16/2014	2:25 PM	85.4	
10/17/2014	1:05 PM	86.0	
10/18/2014	2:40 PM	83.6	
10/24/2014	11:05 AM	123.0	
10/24/2014	1:00 PM	113.8	
10/24/2014	4:50 PM	112.2	
10/25/2014	9:01 AM	98.8	
10/25/2014	1:00 PM	101.7	
10/25/2014	5:25 PM	104.5	
10/26/2014	9:20 AM	103.6	
10/26/2014	1:15 PM	93.6	
10/26/2014	5:15 PM	91.1	
10/27/2014	9:00 AM	71.0	
10/27/2014	1:00 PM	103.1	
10/27/2014	5:10 PM	94.1	
10/28/2014	9:00 AM	77.3	
10/28/2014	1:00 PM	75.2	
10/28/2014	4:45 PM	73.1	
10/29/2014	7:00 AM	65.5	
10/29/2014	10:10 AM	65.3	
10/29/2014	1:10 PM	66.3	

Notes:
- *Reading time signifies the start of monitoring the entire heat extraction system*
- *See "Notes on Heat Extraction System Readings" for comments on reading events*

Date	Time	Temperature (deg F)	Notes
RTD: GIW-07 Hot RTD			
10/29/2014	4:45 PM	66.4	
10/30/2014	7:00 AM	61.3	
10/30/2014	9:00 AM	61.6	
10/30/2014	1:00 PM	63.6	
10/30/2014	4:30 PM	64.9	
10/31/2014	5:00 AM	63.2	
10/31/2014	9:00 AM	60.7	
10/31/2014	1:00 PM	60.0	
10/31/2014	4:30 PM	59.3	
11/1/2014	5:15 AM	52.8	
11/1/2014	4:50 PM	58.6	
11/2/2014	4:45 AM	74.1	
11/2/2014	9:15 AM	76.2	
11/3/2014	5:00 AM	82.7	
11/3/2014	9:00 AM	71.3	
11/3/2014	1:00 PM	71.5	
11/3/2014	4:45 PM	71.7	
11/4/2014	5:00 AM	67.7	
11/4/2014	9:20 AM	65.5	
11/4/2014	1:00 PM	64.4	
11/4/2014	4:30 PM	66.4	
11/5/2014	5:05 AM	61.6	
11/5/2014	9:10 AM	61.2	
11/5/2014	12:50 PM	64.2	
11/5/2014	4:30 PM	64.9	
11/6/2014	9:10 AM	59.9	
11/6/2014	1:05 PM	59.5	
11/6/2014	4:40 PM	60.1	
11/7/2014	9:10 AM	57.7	
11/7/2014	1:10 PM	59.4	
11/8/2014	6:30 AM	60.3	
11/8/2014	12:30 PM	61.4	
11/9/2014	7:42 AM	55.8	
11/10/2014	5:00 AM	60.9	
11/10/2014	9:00 AM	62.4	
11/10/2014	12:50 PM	66.5	
11/11/2014	5:00 AM	64.2	
11/11/2014	9:15 AM	59.7	

Notes:
- *Reading time signifies the start of monitoring the entire heat extraction system*
- *See "Notes on Heat Extraction System Readings" for comments on reading events*

Date	Time	Temperature (deg F)	Notes
RTD: GIW-07 Hot RTD			
11/11/2014	1:15 PM	58.1	
11/11/2014	4:45 PM	56.3	
11/12/2014	5:00 AM	52.8	
11/12/2014	9:00 AM	52.3	
11/12/2014	1:30 PM	54.4	
11/12/2014	4:45 PM	57.7	
11/13/2014	4:50 AM	65.5	
11/13/2014	9:28 AM	67.9	
11/13/2014	1:00 PM	58.2	
11/13/2014	4:50 PM	54.4	
11/14/2014	5:10 AM	67.0	
11/14/2014	9:10 AM	69.5	
11/14/2014	1:00 PM	58.0	
11/15/2014	8:50 AM	72.1	
11/16/2014	5:00 AM	69.9	
11/16/2014	9:00 AM	71.3	
11/17/2014	4:50 AM	49.2	
11/17/2014	9:15 AM	49.2	
11/17/2014	1:20 PM	48.5	
11/17/2014	4:30 PM	46.5	
11/18/2014	5:00 AM	57.1	
11/18/2014	9:10 AM	59.2	
11/18/2014	1:00 PM	51.3	
11/18/2014	4:40 PM	49.2	
11/19/2014	5:00 AM	62.3	
11/19/2014	9:00 AM	65.0	
11/19/2014	1:15 PM	56.8	
11/19/2014	4:45 PM	53.4	
11/20/2014	6:00 AM	65.1	
11/20/2014	9:25 AM	66.7	
11/20/2014	1:00 PM	70.3	
11/20/2014	4:50 PM	57.8	
11/21/2014	6:10 AM	68.0	
11/21/2014	9:00 AM	68.7	
11/21/2014	2:40 PM	56.8	
11/22/2014		76.4	
11/24/2014	10:40 AM	78.2	
11/24/2014	1:20 PM	66.2	

Notes:
- *Reading time signifies the start of monitoring the entire heat extraction system*
- *See "Notes on Heat Extraction System Readings" for comments on reading events*

Date	Time	Temperature (deg F)	Notes
RTD: GIW-07 Hot RTD			
11/25/2014	5:00 AM	71.7	
11/25/2014	9:00 AM	63.9	
11/25/2014	1:00 PM	58.0	
11/25/2014	4:30 PM	56.3	
11/26/2014	4:50 AM	68.4	
11/26/2014	9:00 AM	60.8	
11/26/2014	1:00 PM	55.2	
11/27/2014	5:00 AM	47.9	
11/27/2014	9:00 AM	47.7	
11/27/2014	1:00 PM	48.6	
11/28/2014	5:00 AM	46.5	
11/28/2014	9:00 AM	47.5	
11/29/2014	9:00 AM	56.4	
11/29/2014	4:50 PM	63.5	
11/30/2014	8:50 AM	65.4	
11/30/2014	12:50 PM	68.5	
12/1/2014	5:20 AM	61.0	
12/1/2014	9:00 AM	54.0	
12/1/2014	12:50 PM	55.6	
12/1/2014	5:00 PM	50.2	
12/2/2014	5:10 AM	63.0	
12/2/2014	9:15 AM	56.3	
12/2/2014	1:15 PM	51.5	
12/2/2014	4:50 PM	50.5	
12/3/2014	5:05 AM	48.6	
12/3/2014	9:00 AM	48.4	
12/3/2014	12:45 PM	51.2	
12/3/2014	5:00 PM	51.1	
12/4/2014	9:00 AM	47.9	
12/4/2014	1:10 PM	48.9	
12/4/2014	5:00 PM	50.4	
12/5/2014	5:05 AM	50.7	
12/5/2014	9:00 AM	48.9	
12/6/2014		51.9	
12/8/2014	5:00 AM	50.6	
12/8/2014	9:00 AM	51.4	
12/8/2014	1:30 PM	53.7	
12/8/2014	5:00 PM	54.5	

Notes:
- *Reading time signifies the start of monitoring the entire heat extraction system*
- *See "Notes on Heat Extraction System Readings" for comments on reading events*

Date	Time	Temperature (deg F)	Notes
RTD: GIW-07 Hot RTD			
12/9/2014	5:00 AM	49.2	
12/9/2014	9:00 AM	48.4	
12/9/2014	1:15 PM	48.7	
12/9/2014	5:25 PM	48.4	
12/10/2014	4:30 AM	47.7	
12/10/2014	5:30 AM	47.6	
12/10/2014	9:15 AM	47.7	
12/10/2014	1:15 PM	47.8	
12/10/2014	4:30 PM	47.7	
12/11/2014	5:00 AM	46.3	
12/11/2014	9:00 AM	44.7	
12/11/2014	1:00 PM	47.6	
12/11/2014	5:00 PM	46.8	
12/12/2014	5:00 AM	47.7	
12/12/2014	9:00 AM	48.3	
12/12/2014	1:00 PM	53.2	
12/12/2014	5:20 PM	51.7	
12/13/2014	9:00 AM	52.7	
12/14/2014	1:00 PM	61.1	
12/15/2014	5:00 AM	59.2	
12/15/2014	9:00 AM	58.4	
12/15/2014	1:00 PM	58.9	
12/15/2014	4:50 PM	59.9	
12/16/2014	4:50 AM	53.9	
12/16/2014	9:05 AM	51.3	
12/16/2014	1:30 PM	49.5	
12/16/2014	4:35 PM	48.7	
12/17/2014	8:15 AM	45.4	
12/17/2014	1:30 PM	47.2	
12/17/2014	5:00 PM	46.4	
12/18/2014	5:20 AM	44.2	
12/18/2014	9:30 AM	44.8	
12/18/2014	1:10 PM	45.9	
12/18/2014	5:00 PM	46.1	
12/19/2014	5:00 AM	45.4	
12/19/2014	8:55 AM	45.5	
12/19/2014	12:55 PM	46.4	
12/19/2014	5:00 PM	47.3	

Notes:
- *Reading time signifies the start of monitoring the entire heat extraction system*
- *See "Notes on Heat Extraction System Readings" for comments on reading events*

Date	Time	Temperature (deg F)	Notes
RTD: GIW-07 Hot RTD			
12/20/2014	2:50 PM	49.8	
12/21/2014	10:30 AM	49.8	
12/22/2014	5:10 AM	50.2	
12/22/2014	9:00 AM	49.4	
12/22/2014	1:00 PM	52.1	
12/22/2014	4:50 PM	52.3	
12/23/2014	5:15 AM	53.1	
12/23/2014	9:05 AM	52.8	
12/23/2014	1:00 PM	54.8	
12/24/2014	9:20 AM	51.1	
12/24/2014	12:20 PM	50.8	
12/24/2014	3:20 PM	49.7	
12/26/2014	9:00 AM	53.2	
12/26/2014	2:00 PM	57.8	
12/29/2014	5:40 AM	43.5	
12/29/2014	9:00 AM	44.4	
12/29/2014	1:00 PM	46.8	
12/30/2014	5:15 AM	43.6	
12/30/2014	9:00 AM	43.2	
12/30/2014	1:00 PM	53.1	
12/31/2014	5:25 AM	41.5	
12/31/2014	9:00 AM	41.7	
12/31/2014	1:00 PM	46.1	
201 readings		Average: 61.5	
RTD: GIW-10 Hot RTD			
10/13/2014	3:25 PM	155.4	
10/14/2014	2:40 PM	155.4	
10/14/2014	5:45 PM	143.7	
10/15/2014	8:20 AM	141.9	
10/15/2014	1:25 PM	116.6	
10/16/2014	2:25 PM	85.5	
10/17/2014	1:05 PM	88.7	
10/18/2014	2:40 PM	84.8	
10/24/2014	11:05 AM	139.0	
10/24/2014	1:00 PM	126.2	
10/24/2014	4:50 PM	116.7	
10/25/2014	9:01 AM	104.2	

Notes:
- *Reading time signifies the start of monitoring the entire heat extraction system*
- *See "Notes on Heat Extraction System Readings" for comments on reading events*

Date	Time	Temperature (deg F)	Notes

RTD: GIW-10 Hot RTD

10/25/2014	1:00 PM	104.9	
10/25/2014	5:25 PM	106.2	
10/26/2014	9:20 AM	70.1	
10/26/2014	1:15 PM	79.2	
10/26/2014	5:15 PM	77.4	
10/27/2014	9:00 AM	70.8	
10/27/2014	1:00 PM	120.4	
10/27/2014	5:10 PM	104.6	
10/28/2014	9:00 AM	80.6	
10/28/2014	1:00 PM	78.3	
10/28/2014	4:45 PM	76.0	
10/29/2014	7:00 AM	67.4	
10/29/2014	10:10 AM	66.7	
10/29/2014	1:10 PM	68.4	
10/29/2014	4:45 PM	67.9	
10/30/2014	7:00 AM	62.5	
10/30/2014	9:00 AM	63.3	
10/30/2014	1:00 PM	66.2	
10/30/2014	4:30 PM	66.9	
10/31/2014	5:00 AM	63.4	
10/31/2014	9:00 AM	59.8	
10/31/2014	1:00 PM	61.1	
10/31/2014	4:30 PM	59.5	
11/1/2014	5:15 AM	52.8	
11/1/2014	4:50 PM	59.5	
11/2/2014	4:45 AM	72.3	
11/2/2014	9:15 AM	74.2	
11/3/2014	5:00 AM	80.7	
11/3/2014	9:00 AM	74.6	
11/3/2014	1:00 PM	75.0	
11/3/2014	4:45 PM	73.8	
11/4/2014	5:00 AM	66.8	
11/4/2014	9:20 AM	66.4	
11/4/2014	1:00 PM	66.2	
11/4/2014	4:30 PM	67.7	
11/5/2014	5:05 AM	63.3	
11/5/2014	9:10 AM	63.4	
11/5/2014	12:50 PM	66.5	

Notes:
- *Reading time signifies the start of monitoring the entire heat extraction system*
- *See "Notes on Heat Extraction System Readings" for comments on reading events*

Date	Time	Temperature (deg F)	Notes

RTD: GIW-10 Hot RTD

11/5/2014	4:30 PM	66.5	
11/6/2014	9:10 AM	60.4	
11/6/2014	1:05 PM	59.9	
11/6/2014	4:40 PM	59.6	
11/7/2014	9:10 AM	59.9	
11/7/2014	1:10 PM	61.8	
11/8/2014	6:30 AM	60.3	
11/8/2014	12:30 PM	62.9	
11/9/2014	7:42 AM	56.8	
11/10/2014	5:00 AM	62.0	
11/10/2014	9:00 AM	64.4	
11/10/2014	12:50 PM	69.2	
11/11/2014	4:45 PM	56.1	
11/12/2014	5:00 AM	51.0	
11/12/2014	9:00 AM	52.7	
11/12/2014	1:30 PM	53.6	
11/12/2014	4:45 PM	55.2	
11/13/2014	4:50 AM	61.3	
11/13/2014	9:28 AM	62.4	
11/13/2014	1:00 PM	57.4	
11/13/2014	4:50 PM	53.0	
11/14/2014	5:10 AM	65.1	
11/14/2014	9:10 AM	68.9	
11/14/2014	1:00 PM	59.4	
11/15/2014	8:50 AM	70.1	
11/16/2014	5:00 AM	68.1	
11/16/2014	9:00 AM	69.4	
11/17/2014	4:50 AM	47.5	
11/17/2014	9:15 AM	48.3	
11/17/2014	1:20 PM	45.5	
11/17/2014	4:30 PM	44.2	
11/18/2014	5:00 AM	53.0	
11/18/2014	9:10 AM	56.6	
11/18/2014	1:00 PM	49.4	
11/18/2014	4:40 PM	49.4	
11/19/2014	5:00 AM	60.6	
11/19/2014	9:00 AM	63.5	
11/19/2014	1:15 PM	56.6	

Notes:
- *Reading time signifies the start of monitoring the entire heat extraction system*
- *See "Notes on Heat Extraction System Readings" for comments on reading events*

Date	Time	Temperature (deg F)	Notes

RTD: GIW-10 Hot RTD

11/19/2014	4:45 PM	53.6	
11/20/2014	6:00 AM	62.7	
11/20/2014	9:25 AM	65.5	
11/20/2014	1:00 PM	68.1	
11/20/2014	4:50 PM	57.4	
11/21/2014	6:10 AM	64.3	
11/21/2014	9:00 AM	65.9	
11/21/2014	2:40 PM	57.4	
11/22/2014		75.6	
11/24/2014	10:40 AM	75.7	
11/24/2014	1:20 PM	66.0	
11/25/2014	5:00 AM	68.5	
11/25/2014	9:00 AM	62.5	
11/25/2014	1:00 PM	59.9	
11/25/2014	4:30 PM	57.6	
11/26/2014	4:50 AM	65.8	
11/26/2014	9:00 AM	59.3	
11/26/2014	1:00 PM	54.0	
11/27/2014	5:00 AM	47.8	
11/27/2014	9:00 AM	47.1	
11/27/2014	1:00 PM	48.1	
11/28/2014	5:00 AM	45.9	
11/28/2014	9:00 AM	47.9	
11/29/2014	9:00 AM	58.1	
11/29/2014	4:50 PM	64.7	
11/30/2014	8:50 AM	67.4	
11/30/2014	12:50 PM	70.2	
12/1/2014	5:20 AM	52.6	
12/1/2014	9:00 AM	55.2	
12/1/2014	12:50 PM	55.4	
12/1/2014	5:00 PM	50.7	
12/2/2014	5:10 AM	60.9	
12/2/2014	9:15 AM	58.2	
12/2/2014	1:15 PM	53.2	
12/2/2014	4:50 PM	51.5	
12/3/2014	5:05 AM	49.0	
12/3/2014	9:00 AM	48.9	
12/3/2014	12:45 PM	51.5	

Notes:
- *Reading time signifies the start of monitoring the entire heat extraction system*
- *See "Notes on Heat Extraction System Readings" for comments on reading events*

Date	Time	Temperature (deg F)	Notes

RTD: GIW-10 Hot RTD

12/3/2014	5:00 PM	51.7	
12/4/2014	9:00 AM	47.0	
12/4/2014	1:10 PM	47.9	
12/4/2014	5:00 PM	50.5	
12/5/2014	5:05 AM	49.8	
12/5/2014	9:00 AM	49.5	
12/6/2014		51.0	
12/8/2014	5:00 AM	51.2	
12/8/2014	9:00 AM	52.1	
12/8/2014	1:30 PM	54.3	
12/8/2014	5:00 PM	55.2	
12/9/2014	5:00 AM		RTD malfunction
12/9/2014	9:00 AM		RTD malfunction
12/9/2014	1:15 PM		RTD malfunction
12/9/2014	5:25 PM		RTD malfunction
12/10/2014	4:30 AM	46.4	
12/10/2014	5:30 AM		RTD malfunction
12/10/2014	9:15 AM	48.4	
12/10/2014	1:15 PM	48.5	
12/10/2014	4:30 PM	46.4	
12/11/2014	5:00 AM	47.9	
12/11/2014	9:00 AM	45.4	
12/11/2014	1:00 PM	48.7	
12/11/2014	5:00 PM	49.2	
12/12/2014	5:00 AM	47.8	
12/12/2014	9:00 AM	49.9	
12/12/2014	1:00 PM	53.4	
12/12/2014	5:20 PM	54.8	
12/13/2014	9:00 AM	54.0	
12/14/2014	1:00 PM	62.7	
12/15/2014	5:00 AM	60.8	
12/15/2014	9:00 AM	60.4	
12/15/2014	1:00 PM	60.2	
12/15/2014	4:50 PM	61.2	
12/16/2014	4:50 AM	55.9	
12/16/2014	9:05 AM	53.6	
12/16/2014	1:30 PM	10.9	
12/16/2014	4:35 PM	50.5	

Notes:
- *Reading time signifies the start of monitoring the entire heat extraction system*
- *See "Notes on Heat Extraction System Readings" for comments on reading events*

Date	Time	Temperature (deg F)	Notes

RTD: GIW-10 Hot RTD

12/17/2014	8:15 AM	46.9	
12/17/2014	1:30 PM	48.3	
12/17/2014	5:00 PM	47.8	
12/18/2014	5:20 AM	46.5	
12/18/2014	9:30 AM	46.4	
12/18/2014	1:10 PM	46.9	
12/18/2014	5:00 PM	47.0	
12/19/2014	5:00 AM	46.5	
12/19/2014	8:55 AM	46.9	
12/19/2014	12:55 PM	47.7	
12/19/2014	5:00 PM	47.9	
12/21/2014	10:30 AM	48.8	
12/22/2014	5:10 AM	51.7	
12/22/2014	9:00 AM	52.0	
12/22/2014	1:00 PM	54.3	
12/22/2014	4:50 PM	54.5	
12/23/2014	5:15 AM	53.5	
12/23/2014	9:05 AM	54.6	
12/23/2014	1:00 PM	55.5	
12/24/2014	9:20 AM	49.6	
12/24/2014	12:20 PM	50.4	
12/24/2014	3:20 PM	49.6	
12/26/2014	9:00 AM	53.7	
12/26/2014	2:00 PM	57.8	
12/29/2014	5:40 AM	43.0	
12/29/2014	9:00 AM	44.6	
12/30/2014	5:15 AM	41.7	
12/30/2014	9:00 AM	41.5	
12/30/2014	1:00 PM	44.1	
12/31/2014	5:25 AM	39.9	
12/31/2014	9:00 AM	40.8	
12/31/2014	1:00 PM	45.3	
196 readings		Average: 62.3	

RTD: TML 1

10/13/2014	3:25 PM	75.9	
10/14/2014	2:40 PM	83.9	
10/14/2014	5:45 PM	76.9	

Notes:
- *Reading time signifies the start of monitoring the entire heat extraction system*
- *See "Notes on Heat Extraction System Readings" for comments on reading events*

Date	Time	Temperature (deg F)	Notes
RTD: TML 1			
10/15/2014	8:20 AM	71.3	
10/15/2014	1:25 PM	69.4	
10/16/2014	2:25 PM	69.9	
10/17/2014	1:05 PM	66.1	
10/18/2014	2:40 PM	61.4	
10/24/2014	11:05 AM	72.6	
10/24/2014	1:00 PM	72.6	
10/24/2014	4:50 PM	69.6	
10/25/2014	9:01 AM	69.2	
10/25/2014	1:00 PM	73.6	
10/25/2014	5:25 PM	75.3	
10/26/2014	9:20 AM	67.4	
10/26/2014	1:15 PM	70.0	
10/26/2014	5:15 PM	72.7	
10/27/2014	9:00 AM	73.0	
10/27/2014	1:00 PM	75.2	
10/27/2014	5:10 PM	72.8	
10/28/2014	9:00 AM	60.3	
10/28/2014	1:00 PM	59.5	
10/28/2014	4:45 PM	57.9	
10/29/2014	7:00 AM	50.5	
10/29/2014	10:10 AM	51.2	
10/29/2014	1:10 PM	52.7	
10/29/2014	4:45 PM	54.2	
10/30/2014	7:00 AM	47.9	
10/30/2014	9:00 AM	48.7	
10/30/2014	1:00 PM	52.1	
10/30/2014	4:30 PM	54.2	
10/31/2014	5:00 AM	51.6	
10/31/2014	9:00 AM	48.4	
10/31/2014	1:00 PM	45.6	
10/31/2014	4:30 PM	46.1	
11/1/2014	5:15 AM	38.7	
11/1/2014	4:50 PM	45.9	
11/2/2014	4:45 AM	68.9	
11/2/2014	9:15 AM	71.3	
11/3/2014	5:00 AM	77.6	
11/3/2014	9:00 AM	55.9	

Notes:
- *Reading time signifies the start of monitoring the entire heat extraction system*
- *See "Notes on Heat Extraction System Readings" for comments on reading events*

Date	Time	Temperature (deg F)	Notes
RTD: TML 1			
11/3/2014	1:00 PM	59.5	
11/3/2014	4:45 PM	60.0	
11/4/2014	5:00 AM	53.4	
11/4/2014	9:20 AM	53.7	
11/4/2014	1:00 PM	53.7	
11/4/2014	4:30 PM	55.0	
11/5/2014	5:05 AM	49.6	
11/5/2014	9:10 AM	49.3	
11/5/2014	12:50 PM	53.7	
11/5/2014	4:30 PM	55.0	
11/6/2014	9:10 AM	49.2	
11/6/2014	1:05 PM	48.1	
11/6/2014	4:40 PM	48.0	
11/7/2014	9:10 AM	44.3	
11/7/2014	1:10 PM	47.0	
11/8/2014	6:30 AM	48.5	
11/8/2014	12:30 PM	48.7	
11/9/2014	7:42 AM	41.2	
11/10/2014	5:00 AM	49.1	
11/10/2014	9:00 AM	50.8	
11/10/2014	12:50 PM	56.9	
11/11/2014	5:00 AM	52.4	
11/11/2014	9:15 AM	44.0	
11/11/2014	1:15 PM	41.6	
11/11/2014	4:45 PM	39.7	
11/12/2014	5:00 AM	36.1	
11/12/2014	9:00 AM	35.6	
11/12/2014	1:30 PM	38.3	
11/12/2014	4:45 PM	49.5	
11/13/2014	4:50 AM	59.4	
11/13/2014	9:28 AM	61.8	
11/13/2014	1:00 PM	42.5	
11/13/2014	4:50 PM	37.7	
11/14/2014	5:10 AM	60.0	
11/14/2014	9:10 AM	64.4	
11/14/2014	1:00 PM	43.4	
11/15/2014	8:50 AM	68.0	
11/16/2014	5:00 AM	66.5	

Notes:
- *Reading time signifies the start of monitoring the entire heat extraction system*
- *See "Notes on Heat Extraction System Readings" for comments on reading events*

Date	Time	Temperature (deg F)	Notes
RTD: TML 1			
11/16/2014	9:00 AM	67.0	
11/17/2014	4:50 AM	34.5	
11/17/2014	9:15 AM	35.7	
11/17/2014	1:20 PM	36.0	
11/17/2014	4:30 PM	35.4	
11/18/2014	5:00 AM	51.6	
11/18/2014	9:10 AM	54.9	
11/18/2014	1:00 PM	39.4	
11/18/2014	4:40 PM	37.3	
11/19/2014	5:00 AM	57.8	
11/19/2014	9:00 AM	61.2	
11/19/2014	1:15 PM	46.1	
11/19/2014	4:45 PM	41.2	
11/20/2014	6:00 AM	60.5	
11/20/2014	9:25 AM	63.1	
11/20/2014	1:00 PM	67.2	
11/20/2014	4:50 PM	43.9	
11/21/2014	6:10 AM	63.2	
11/21/2014	9:00 AM	64.3	
11/21/2014	2:40 PM	43.5	
11/22/2014		72.9	
11/24/2014	10:40 AM	72.3	
11/24/2014	1:20 PM	51.4	
11/25/2014	5:00 AM	66.0	
11/25/2014	9:00 AM	51.9	
11/25/2014	1:00 PM	43.5	
11/25/2014	4:30 PM	42.9	
11/26/2014	4:50 AM	63.9	
11/26/2014	9:00 AM	49.8	
11/26/2014	1:00 PM	39.8	
11/27/2014	5:00 AM	36.5	
11/27/2014	9:00 AM	36.4	
11/27/2014	1:00 PM	37.5	
11/28/2014	5:00 AM	35.9	
11/28/2014	9:00 AM	37.2	
11/29/2014	9:00 AM	46.3	
11/29/2014	4:50 PM	56.7	
11/30/2014	8:50 AM	57.4	

Notes:
- *Reading time signifies the start of monitoring the entire heat extraction system*
- *See "Notes on Heat Extraction System Readings" for comments on reading events*

Date	Time	Temperature (deg F)	Notes
RTD: TML 1			
11/30/2014	12:50 PM	60.8	
12/1/2014	5:20 AM	40.1	
12/1/2014	9:00 AM	40.5	
12/1/2014	12:50 PM	41.0	
12/1/2014	5:00 PM	37.7	
12/2/2014	5:10 AM	58.3	
12/2/2014	9:15 AM	46.2	
12/2/2014	1:15 PM	39.9	
12/2/2014	4:50 PM	39.1	
12/3/2014	5:05 AM	38.4	
12/3/2014	9:00 AM	38.5	
12/3/2014	12:45 PM	42.4	
12/3/2014	5:00 PM	42.1	
12/4/2014	9:00 AM	38.5	
12/4/2014	1:10 PM	39.8	
12/4/2014	5:00 PM	42.1	
12/5/2014	5:05 AM	39.7	
12/5/2014	9:00 AM	38.0	
12/6/2014		42.7	
12/8/2014	5:00 AM	42.1	
12/8/2014	9:00 AM	43.1	
12/8/2014	1:30 PM	46.4	
12/8/2014	5:00 PM	54.6	
12/9/2014	5:00 AM	39.1	
12/9/2014	9:00 AM	38.1	
12/9/2014	1:15 PM	39.1	
12/9/2014	5:25 PM	38.9	
12/10/2014	4:30 AM	38.3	
12/10/2014	5:30 AM	38.0	
12/10/2014	9:15 AM	38.7	
12/10/2014	1:15 PM	37.7	
12/10/2014	4:30 PM	38.3	
12/11/2014	5:00 AM	35.4	
12/11/2014	9:00 AM	33.4	
12/11/2014	1:00 PM	37.4	
12/11/2014	5:00 PM	37.8	
12/12/2014	5:00 AM	38.1	
12/12/2014	9:00 AM	39.0	

Notes:
- *Reading time signifies the start of monitoring the entire heat extraction system*
- *See "Notes on Heat Extraction System Readings" for comments on reading events*

Date	Time	Temperature (deg F)	Notes
RTD: TML 1			
12/12/2014	1:00 PM	45.0	
12/12/2014	5:20 PM	49.8	
12/13/2014	9:00 AM	43.0	
12/14/2014	1:00 PM	55.8	
12/15/2014	5:00 AM	55.7	
12/15/2014	9:00 AM	49.4	
12/15/2014	1:00 PM	51.5	
12/15/2014	4:50 PM	52.8	
12/16/2014	4:50 AM	44.5	
12/16/2014	9:05 AM	42.1	
12/16/2014	1:30 PM	39.5	
12/16/2014	4:35 PM	38.6	
12/17/2014	8:15 AM	36.0	
12/17/2014	1:30 PM	38.5	
12/17/2014	5:00 PM	38.0	
12/18/2014	5:20 AM	35.4	
12/18/2014	9:30 AM	35.7	
12/18/2014	1:10 PM	37.6	
12/18/2014	5:00 PM	37.1	
12/19/2014	5:00 AM	37.0	
12/19/2014	8:55 AM	36.9	
12/19/2014	12:55 PM	38.6	
12/19/2014	5:00 PM	38.3	
12/20/2014	2:50 PM	41.6	
12/21/2014	10:30 AM	41.8	
12/22/2014	5:10 AM	42.8	
12/22/2014	9:00 AM	36.9	
12/22/2014	1:00 PM	39.5	
12/22/2014	4:50 PM	49.6	
12/23/2014	5:15 AM	44.4	
12/23/2014	9:05 AM	45.5	
12/23/2014	1:00 PM	45.1	
12/24/2014	9:20 AM	42.2	
12/24/2014	12:20 PM	41.9	
12/24/2014	3:20 PM	41.5	
12/26/2014	9:00 AM	45.1	
12/26/2014	2:00 PM	51.8	
12/29/2014	5:40 AM	34.4	

Notes:
- *Reading time signifies the start of monitoring the entire heat extraction system*
- *See "Notes on Heat Extraction System Readings" for comments on reading events*

Date	Time	Temperature (deg F)	Notes
RTD: TML 1			
12/29/2014	9:00 AM	35.3	
12/29/2014	1:00 PM	37.7	
12/30/2014	5:15 AM	34.8	
12/30/2014	9:00 AM	33.9	
12/30/2014	1:00 PM	35.8	
12/31/2014	5:25 AM	29.2	
12/31/2014	9:00 AM	32.3	
12/31/2014	1:00 PM	37.9	
201 readings		Average: 49.0	
RTD: TML 2			
10/13/2014	3:25 PM	75.0	
10/14/2014	2:40 PM	82.0	
10/14/2014	5:45 PM	75.5	
10/15/2014	8:20 AM	70.8	
10/15/2014	1:25 PM	69.4	
10/16/2014	2:25 PM	67.4	
10/17/2014	1:05 PM	66.5	
10/18/2014	2:40 PM	62.1	
10/24/2014	11:05 AM	72.6	
10/24/2014	1:00 PM	72.8	
10/24/2014	4:50 PM	69.8	
10/25/2014	9:01 AM	68.9	
10/25/2014	1:00 PM	74.9	
10/25/2014	5:25 PM	79.0	
10/26/2014	9:20 AM	67.5	
10/26/2014	1:15 PM	72.1	
10/26/2014	5:15 PM	73.6	
10/27/2014	9:00 AM	73.1	
10/27/2014	1:00 PM	75.2	
10/27/2014	5:10 PM	72.7	
10/28/2014	9:00 AM	60.1	
10/28/2014	1:00 PM	59.9	
10/28/2014	4:45 PM	58.0	
10/29/2014	7:00 AM	50.5	
10/29/2014	10:10 AM	51.4	
10/29/2014	1:10 PM	52.9	
10/29/2014	4:45 PM	54.5	

Notes:
- *Reading time signifies the start of monitoring the entire heat extraction system*
- *See "Notes on Heat Extraction System Readings" for comments on reading events*

Date	Time	Temperature (deg F)	Notes
RTD: TML 2			
10/30/2014	7:00 AM	47.9	
10/30/2014	9:00 AM	48.7	
10/30/2014	1:00 PM	52.8	
10/30/2014	4:30 PM	54.3	
10/31/2014	5:00 AM	51.5	
10/31/2014	9:00 AM	48.0	
10/31/2014	1:00 PM	46.4	
10/31/2014	4:30 PM	46.2	
11/1/2014	5:15 AM	38.4	
11/1/2014	4:50 PM	47.3	
11/2/2014	4:45 AM	68.4	
11/2/2014	9:15 AM	71.1	
11/3/2014	5:00 AM	76.9	
11/3/2014	9:00 AM	56.3	
11/3/2014	1:00 PM	59.8	
11/3/2014	4:45 PM	60.0	
11/4/2014	5:00 AM	53.3	
11/4/2014	9:20 AM	54.1	
11/4/2014	1:00 PM	52.8	
11/4/2014	4:30 PM	54.7	
11/5/2014	5:05 AM	49.4	
11/5/2014	9:10 AM	49.3	
11/5/2014	12:50 PM	54.6	
11/5/2014	4:30 PM	55.1	
11/6/2014	9:10 AM	49.0	
11/6/2014	1:05 PM	48.5	
11/6/2014	4:40 PM	47.6	
11/7/2014	9:10 AM	44.4	
11/7/2014	1:10 PM	48.1	
11/8/2014	6:30 AM	48.7	
11/8/2014	12:30 PM	49.5	
11/9/2014	7:42 AM	41.6	
11/10/2014	5:00 AM	49.1	
11/10/2014	9:00 AM	51.4	
11/10/2014	12:50 PM	58.2	
11/11/2014	5:00 AM	51.7	
11/11/2014	9:15 AM	43.6	
11/11/2014	1:15 PM	41.1	

Notes:
- *Reading time signifies the start of monitoring the entire heat extraction system*
- *See "Notes on Heat Extraction System Readings" for comments on reading events*

Date	Time	Temperature (deg F)	Notes
RTD: TML 2			
11/11/2014	4:45 PM	39.4	
11/12/2014	5:00 AM	35.9	
11/12/2014	9:00 AM	35.6	
11/12/2014	1:30 PM	41.0	
11/12/2014	4:45 PM	49.4	
11/13/2014	4:50 AM	58.7	
11/13/2014	9:28 AM	61.8	
11/13/2014	1:00 PM	41.6	
11/13/2014	4:50 PM	37.4	
11/14/2014	5:10 AM	59.4	
11/14/2014	9:10 AM	63.7	
11/14/2014	1:00 PM	43.0	
11/15/2014	8:50 AM	67.0	
11/16/2014	5:00 AM	64.4	
11/16/2014	9:00 AM	66.3	
11/17/2014	4:50 AM	34.5	
11/17/2014	9:15 AM	35.0	
11/17/2014	1:20 PM	35.9	
11/17/2014	4:30 PM	35.0	
11/18/2014	5:00 AM	51.2	
11/18/2014	9:10 AM	53.5	
11/18/2014	1:00 PM	38.8	
11/18/2014	4:40 PM	36.7	
11/19/2014	5:00 AM	56.5	
11/19/2014	9:00 AM	60.5	
11/19/2014	1:15 PM	45.0	
11/19/2014	4:45 PM	41.2	
11/20/2014	6:00 AM	59.4	
11/20/2014	9:25 AM	61.9	
11/20/2014	1:00 PM	62.6	
11/20/2014	4:50 PM	43.4	
11/21/2014	6:10 AM	62.2	
11/21/2014	9:00 AM	63.2	
11/21/2014	2:40 PM	42.9	
11/22/2014		72.4	
11/24/2014	10:40 AM	68.1	
11/24/2014	1:20 PM	50.9	
11/25/2014	5:00 AM	65.3	

Notes:
- *Reading time signifies the start of monitoring the entire heat extraction system*
- *See "Notes on Heat Extraction System Readings" for comments on reading events*

Date	Time	Temperature (deg F)	Notes
RTD: TML 2			
11/25/2014	9:00 AM	50.3	
11/25/2014	1:00 PM	43.9	
11/25/2014	4:30 PM	43.1	
11/26/2014	4:50 AM	63.5	
11/26/2014	9:00 AM	48.4	
11/26/2014	1:00 PM	40.5	
11/27/2014	5:00 AM	36.1	
11/27/2014	9:00 AM	36.1	
11/27/2014	1:00 PM	37.5	
11/28/2014	5:00 AM	35.8	
11/28/2014	9:00 AM	37.8	
11/29/2014	9:00 AM	46.8	
11/29/2014	4:50 PM	56.7	
11/30/2014	8:50 AM	56.9	
11/30/2014	12:50 PM	61.0	
12/1/2014	5:20 AM	39.6	
12/1/2014	9:00 AM	40.1	
12/1/2014	12:50 PM	41.2	
12/1/2014	5:00 PM	37.8	
12/2/2014	5:10 AM	58.0	
12/2/2014	9:15 AM	45.1	
12/2/2014	1:15 PM	39.8	
12/2/2014	4:50 PM	39.0	
12/3/2014	5:05 AM	38.2	
12/3/2014	9:00 AM	38.5	
12/3/2014	12:45 PM	42.8	
12/3/2014	5:00 PM	41.6	
12/4/2014	9:00 AM	38.4	
12/4/2014	1:10 PM	38.9	
12/4/2014	5:00 PM	41.9	
12/5/2014	5:05 AM	42.4	
12/5/2014	9:00 AM	41.9	
12/6/2014		43.0	
12/8/2014	5:00 AM	42.0	
12/8/2014	9:00 AM	43.2	
12/8/2014	1:30 PM	46.5	
12/8/2014	5:00 PM	46.7	
12/9/2014	5:00 AM	38.4	

Notes:
- *Reading time signifies the start of monitoring the entire heat extraction system*
- *See "Notes on Heat Extraction System Readings" for comments on reading events*

Date	Time	Temperature (deg F)	Notes
RTD: TML 2			
12/9/2014	9:00 AM	38.1	
12/9/2014	1:15 PM	39.2	
12/9/2014	5:25 PM	38.9	
12/10/2014	4:30 AM	38.0	
12/10/2014	5:30 AM	38.1	
12/10/2014	9:15 AM	38.4	
12/10/2014	1:15 PM	38.6	
12/10/2014	4:30 PM	38.0	
12/11/2014	5:00 AM	35.8	
12/11/2014	9:00 AM	34.0	
12/11/2014	1:00 PM	38.2	
12/11/2014	5:00 PM	37.9	
12/12/2014	5:00 AM	38.5	
12/12/2014	9:00 AM	39.3	
12/12/2014	1:00 PM	46.1	
12/12/2014	5:20 PM	47.1	
12/13/2014	9:00 AM	42.8	
12/14/2014	1:00 PM	56.4	
12/15/2014	5:00 AM	53.0	
12/15/2014	9:00 AM	50.6	
12/15/2014	1:00 PM	51.8	
12/15/2014	4:50 PM	53.2	
12/16/2014	4:50 AM	44.7	
12/16/2014	9:05 AM	43.0	
12/16/2014	1:30 PM	40.0	
12/16/2014	4:35 PM	38.6	
12/17/2014	8:15 AM	36.1	
12/17/2014	1:30 PM	38.9	
12/17/2014	5:00 PM	37.7	
12/18/2014	5:20 AM	35.7	
12/18/2014	9:30 AM	35.9	
12/18/2014	1:10 PM	37.8	
12/18/2014	5:00 PM	37.8	
12/19/2014	5:00 AM	36.6	
12/19/2014	8:55 AM	36.7	
12/19/2014	12:55 PM	38.6	
12/19/2014	5:00 PM	36.7	
12/20/2014	2:50 PM	42.1	

Notes:
- *Reading time signifies the start of monitoring the entire heat extraction system*
- *See "Notes on Heat Extraction System Readings" for comments on reading events*

Date	Time	Temperature (deg F)	Notes

RTD: TML 2

12/21/2014	10:30 AM	42.5	
12/22/2014	5:10 AM	41.1	
12/22/2014	9:00 AM	41.1	
12/22/2014	1:00 PM	44.3	
12/22/2014	4:50 PM	49.5	
12/23/2014	5:15 AM	45.0	
12/23/2014	9:05 AM	45.6	
12/23/2014	1:00 PM	47.1	
12/24/2014	9:20 AM	42.3	
12/24/2014	12:20 PM	42.5	
12/24/2014	3:20 PM	40.2	
12/26/2014	9:00 AM	46.3	
12/26/2014	2:00 PM	53.1	
12/29/2014	5:40 AM	34.5	
12/29/2014	9:00 AM	35.7	
12/29/2014	1:00 PM	40.5	
12/30/2014	5:15 AM	34.7	
12/30/2014	9:00 AM	34.4	
12/30/2014	1:00 PM	36.2	
12/31/2014	5:25 AM	32.4	
12/31/2014	9:00 AM	33.0	
12/31/2014	1:00 PM	42.4	
201 readings		Average: 49.0	

RTD: TML 3

10/13/2014	3:25 PM	74.1	
10/14/2014	2:40 PM	81.6	
10/14/2014	5:45 PM	75.5	
10/15/2014	8:20 AM	70.8	
10/15/2014	1:25 PM	69.9	
10/16/2014	2:25 PM	68.1	
10/17/2014	1:05 PM	66.8	
10/18/2014	2:40 PM	63.3	
10/24/2014	11:05 AM	72.3	
10/24/2014	1:00 PM	73.1	
10/24/2014	4:50 PM	70.1	
10/25/2014	9:01 AM	68.9	
10/25/2014	1:00 PM	75.4	

Notes:
- *Reading time signifies the start of monitoring the entire heat extraction system*
- *See "Notes on Heat Extraction System Readings" for comments on reading events*

Date	Time	Temperature (deg F)	Notes
RTD: TML 3			
10/25/2014	5:25 PM	76.1	
10/26/2014	9:20 AM	67.8	
10/26/2014	1:15 PM	73.5	
10/26/2014	5:15 PM	73.9	
10/27/2014	9:00 AM	75.2	
10/27/2014	1:00 PM	75.2	
10/27/2014	5:10 PM	72.8	
10/28/2014	9:00 AM	60.4	
10/28/2014	1:00 PM	60.3	
10/28/2014	4:45 PM	58.2	
10/29/2014	7:00 AM	50.5	
10/29/2014	10:10 AM	51.7	
10/29/2014	1:10 PM	53.2	
10/29/2014	4:45 PM	54.6	
10/30/2014	7:00 AM	48.1	
10/30/2014	9:00 AM	49.1	
10/30/2014	1:00 PM	52.8	
10/30/2014	4:30 PM	54.5	
10/31/2014	5:00 AM	51.5	
10/31/2014	9:00 AM	47.9	
10/31/2014	1:00 PM	46.6	
10/31/2014	4:30 PM	46.6	
11/1/2014	5:15 AM	38.6	
11/1/2014	4:50 PM	48.5	
11/2/2014	4:45 AM	68.8	
11/2/2014	9:15 AM	70.9	
11/3/2014	5:00 AM	76.9	
11/3/2014	9:00 AM	56.8	
11/3/2014	1:00 PM	60.0	
11/3/2014	4:45 PM	60.3	
11/4/2014	5:00 AM	53.3	
11/4/2014	9:20 AM	56.6	
11/4/2014	1:00 PM	55.9	
11/4/2014	4:30 PM	54.9	
11/5/2014	5:05 AM	49.5	
11/5/2014	9:10 AM	49.5	
11/5/2014	12:50 PM	54.8	
11/5/2014	4:30 PM	55.3	

Notes:
- *Reading time signifies the start of monitoring the entire heat extraction system*
- *See "Notes on Heat Extraction System Readings" for comments on reading events*

Date	Time	Temperature (deg F)	Notes
RTD: TML 3			
11/6/2014	9:10 AM	49.2	
11/6/2014	1:05 PM	48.7	
11/6/2014	4:40 PM	48.1	
11/7/2014	9:10 AM	44.7	
11/7/2014	1:10 PM	48.2	
11/8/2014	6:30 AM	48.3	
11/8/2014	12:30 PM	49.5	
11/9/2014	7:42 AM	41.6	
11/10/2014	5:00 AM	49.2	
11/10/2014	9:00 AM	51.7	
11/10/2014	12:50 PM	58.2	
11/11/2014	5:00 AM	51.5	
11/11/2014	9:15 AM	44.0	
11/11/2014	1:15 PM	41.7	
11/11/2014	4:45 PM	39.7	
11/12/2014	5:00 AM	36.1	
11/12/2014	9:00 AM	35.8	
11/12/2014	1:30 PM	40.6	
11/12/2014	4:45 PM	49.3	
11/13/2014	4:50 AM	58.7	
11/13/2014	9:28 AM	61.6	
11/13/2014	1:00 PM	42.3	
11/13/2014	4:50 PM	37.7	
11/14/2014	5:10 AM	59.8	
11/14/2014	9:10 AM	63.5	
11/14/2014	1:00 PM	43.5	
11/15/2014	8:50 AM	67.3	
11/16/2014	5:00 AM	64.9	
11/16/2014	9:00 AM	66.4	
11/17/2014	4:50 AM	34.5	
11/17/2014	9:15 AM	35.1	
11/17/2014	1:20 PM	35.5	
11/17/2014	4:30 PM	35.2	
11/18/2014	5:00 AM	51.1	
11/18/2014	9:10 AM	53.9	
11/18/2014	1:00 PM	40.0	
11/18/2014	4:40 PM	37.4	
11/19/2014	5:00 AM	57.1	

Notes:
- *Reading time signifies the start of monitoring the entire heat extraction system*
- *See "Notes on Heat Extraction System Readings" for comments on reading events*

Date	Time	Temperature (deg F)	Notes
RTD: TML 3			
11/19/2014	9:00 AM	60.5	
11/19/2014	1:15 PM	46.1	
11/19/2014	4:45 PM	41.5	
11/20/2014	6:00 AM	59.6	
11/20/2014	9:25 AM	65.4	
11/20/2014	1:00 PM	65.3	
11/20/2014	4:50 PM	44.5	
11/21/2014	6:10 AM	62.4	
11/21/2014	9:00 AM	63.6	
11/21/2014	2:40 PM	43.9	
11/22/2014		72.7	
11/24/2014	10:40 AM	68.9	
11/24/2014	1:20 PM	51.2	
11/25/2014	5:00 AM	65.2	
11/25/2014	9:00 AM	51.1	
11/25/2014	1:00 PM	44.3	
11/25/2014	4:30 PM	43.2	
11/26/2014	4:50 AM	63.3	
11/26/2014	9:00 AM	49.1	
11/26/2014	1:00 PM	42.3	
11/27/2014	5:00 AM	36.5	
11/27/2014	9:00 AM	36.8	
11/27/2014	1:00 PM	38.2	
11/28/2014	5:00 AM	35.8	
11/28/2014	9:00 AM	37.9	
11/29/2014	9:00 AM	47.1	
11/29/2014	4:50 PM	56.8	
11/30/2014	8:50 AM	57.5	
11/30/2014	12:50 PM	61.1	
12/1/2014	5:20 AM	39.3	
12/1/2014	9:00 AM	40.1	
12/1/2014	12:50 PM	41.7	
12/1/2014	5:00 PM	38.0	
12/2/2014	5:10 AM	57.9	
12/2/2014	9:15 AM	45.8	
12/2/2014	1:15 PM	39.9	
12/2/2014	4:50 PM	39.2	
12/3/2014	5:05 AM	38.2	

Notes:
- *Reading time signifies the start of monitoring the entire heat extraction system*
- *See "Notes on Heat Extraction System Readings" for comments on reading events*

Date	Time	Temperature (deg F)	Notes
RTD: TML 3			
12/3/2014	9:00 AM	38.6	
12/3/2014	12:45 PM	42.9	
12/3/2014	5:00 PM	42.3	
12/4/2014	9:00 AM	37.8	
12/4/2014	1:10 PM	40.3	
12/4/2014	5:00 PM	42.0	
12/5/2014	5:05 AM	44.6	
12/5/2014	9:00 AM	45.2	
12/6/2014		43.0	
12/8/2014	5:00 AM	42.3	
12/8/2014	9:00 AM	43.3	
12/8/2014	1:30 PM	46.6	
12/8/2014	5:00 PM	47.0	
12/9/2014	5:00 AM	39.1	
12/9/2014	9:00 AM	38.2	
12/9/2014	1:15 PM	45.2	
12/9/2014	5:25 PM	38.8	
12/10/2014	4:30 AM	38.3	
12/10/2014	5:30 AM	38.2	
12/10/2014	9:15 AM	38.5	
12/10/2014	1:15 PM	38.4	
12/10/2014	4:30 PM	38.3	
12/11/2014	5:00 AM	36.4	
12/11/2014	9:00 AM	40.7	
12/11/2014	1:00 PM	42.5	
12/11/2014	5:00 PM	39.5	
12/12/2014	5:00 AM	38.4	
12/12/2014	9:00 AM	39.5	
12/12/2014	1:00 PM	46.3	
12/12/2014	5:20 PM	46.9	
12/13/2014	9:00 AM	43.4	
12/14/2014	1:00 PM	54.5	
12/15/2014	5:00 AM	52.3	
12/15/2014	9:00 AM	50.7	
12/15/2014	1:00 PM	51.6	
12/15/2014	4:50 PM	53.0	
12/16/2014	4:50 AM	44.6	
12/16/2014	9:05 AM	41.8	

Notes:
- *Reading time signifies the start of monitoring the entire heat extraction system*
- *See "Notes on Heat Extraction System Readings" for comments on reading events*

Date	Time	Temperature (deg F)	Notes
RTD: TML 3			
12/16/2014	1:30 PM	40.0	
12/16/2014	4:35 PM	39.2	
12/17/2014	8:15 AM	36.3	
12/17/2014	1:30 PM	38.8	
12/17/2014	5:00 PM	38.2	
12/18/2014	5:20 AM	32.8	
12/18/2014	9:30 AM	36.1	
12/18/2014	1:10 PM	37.6	
12/18/2014	5:00 PM	37.8	
12/19/2014	5:00 AM	36.9	
12/19/2014	8:55 AM	37.1	
12/19/2014	12:55 PM	39.1	
12/19/2014	5:00 PM	39.4	
12/20/2014	2:50 PM	42.8	
12/21/2014	10:30 AM	38.1	
12/22/2014	5:10 AM	42.8	
12/22/2014	9:00 AM	43.4	
12/22/2014	1:00 PM	47.4	
12/22/2014	4:50 PM	49.0	
12/23/2014	5:15 AM	43.8	
12/23/2014	9:05 AM	46.0	
12/23/2014	1:00 PM	47.7	
12/24/2014	9:20 AM	42.5	
12/24/2014	12:20 PM	42.5	
12/24/2014	3:20 PM	41.9	
12/26/2014	9:00 AM	47.0	
12/26/2014	2:00 PM	52.7	
12/29/2014	5:40 AM	45.6	
12/29/2014	9:00 AM	35.7	
12/29/2014	1:00 PM	38.9	
12/30/2014	5:15 AM	34.6	
12/30/2014	9:00 AM	34.0	
12/30/2014	1:00 PM	36.1	
12/31/2014	5:25 AM	31.2	
12/31/2014	9:00 AM	28.9	
12/31/2014	1:00 PM	38.5	
201 readings		Average: 49.4	

Notes:
- *Reading time signifies the start of monitoring the entire heat extraction system*
- *See "Notes on Heat Extraction System Readings" for comments on reading events*

Date	Time	Temperature (deg F)	Notes
RTD: TML 4			
10/13/2014	3:25 PM	105.4	
10/14/2014	2:40 PM	123.2	
10/14/2014	5:45 PM	111.0	
10/15/2014	8:20 AM	113.3	
10/15/2014	1:25 PM	100.3	
10/16/2014	2:25 PM	81.6	
10/17/2014	1:05 PM	78.5	
10/18/2014	2:40 PM	75.7	
10/24/2014	11:05 AM	99.0	
10/24/2014	1:00 PM	88.1	
10/24/2014	4:50 PM	95.0	
10/25/2014	9:01 AM	87.4	
10/25/2014	1:00 PM	92.3	
10/25/2014	5:25 PM	93.1	
10/26/2014	9:20 AM	86.3	
10/26/2014	1:15 PM	90.4	
10/26/2014	5:15 PM	90.9	
10/27/2014	9:00 AM	90.8	
10/27/2014	1:00 PM	95.6	
10/27/2014	5:10 PM	85.6	
10/28/2014	9:00 AM	69.6	
10/28/2014	1:00 PM	70.4	
10/28/2014	4:45 PM	68.2	
10/29/2014	7:00 AM	59.8	
10/29/2014	10:10 AM	59.4	
10/29/2014	1:10 PM	60.7	
10/29/2014	4:45 PM	62.6	
10/30/2014	7:00 AM	56.3	
10/30/2014	9:00 AM	56.7	
10/30/2014	1:00 PM	59.7	
10/30/2014	4:30 PM	61.3	
10/31/2014	5:00 AM	59.2	
10/31/2014	9:00 AM	56.6	
10/31/2014	1:00 PM	54.9	
10/31/2014	4:30 PM	55.2	
11/1/2014	5:15 AM	47.3	
11/1/2014	4:50 PM	53.5	
11/2/2014	4:45 AM	72.3	

Notes:
- *Reading time signifies the start of monitoring the entire heat extraction system*
- *See "Notes on Heat Extraction System Readings" for comments on reading events*

Date	Time	Temperature (deg F)	Notes
RTD: TML 4			
11/2/2014	9:15 AM	74.8	
11/3/2014	5:00 AM	81.3	
11/3/2014	9:00 AM	66.2	
11/3/2014	1:00 PM	68.5	
11/3/2014	4:45 PM	67.6	
11/4/2014	5:00 AM	63.2	
11/4/2014	9:20 AM	63.2	
11/4/2014	1:00 PM	62.8	
11/4/2014	4:30 PM	62.3	
11/5/2014	5:05 AM	57.1	
11/5/2014	9:10 AM	56.8	
11/5/2014	12:50 PM	61.3	
11/5/2014	4:30 PM	61.7	
11/6/2014	9:10 AM	56.7	
11/6/2014	1:05 PM	55.6	
11/6/2014	4:40 PM	55.1	
11/7/2014	9:10 AM	51.8	
11/7/2014	1:10 PM	55.0	
11/8/2014	6:30 AM	55.3	
11/8/2014	12:30 PM	56.8	
11/9/2014	7:42 AM	49.5	
11/10/2014	5:00 AM	56.0	
11/10/2014	9:00 AM	57.9	
11/10/2014	12:50 PM	63.9	
11/11/2014	5:00 AM	60.1	
11/11/2014	9:15 AM	53.4	
11/11/2014	1:15 PM	51.1	
11/11/2014	4:45 PM	49.2	
11/12/2014	5:00 AM	45.4	
11/12/2014	9:00 AM	45.1	
11/12/2014	1:30 PM	48.8	
11/12/2014	4:45 PM	53.8	
11/13/2014	4:50 AM	62.7	
11/13/2014	9:28 AM	65.4	
11/13/2014	1:00 PM	51.9	
11/13/2014	4:50 PM	46.7	
11/14/2014	5:10 AM	63.4	
11/14/2014	9:10 AM	67.9	

Notes:
- *Reading time signifies the start of monitoring the entire heat extraction system*
- *See "Notes on Heat Extraction System Readings" for comments on reading events*

Date	Time	Temperature (deg F)	Notes
RTD: TML 4			
11/14/2014	1:00 PM	53.6	
11/15/2014	8:50 AM	71.2	
11/16/2014	5:00 AM	68.1	
11/16/2014	9:00 AM	70.3	
11/17/2014	4:50 AM	43.1	
11/17/2014	9:15 AM	44.0	
11/17/2014	1:20 PM	44.4	
11/17/2014	4:30 PM	41.9	
11/18/2014	5:00 AM	54.8	
11/18/2014	9:10 AM	58.3	
11/18/2014	1:00 PM	47.2	
11/18/2014	4:40 PM	44.6	
11/19/2014	5:00 AM	60.7	
11/19/2014	9:00 AM	63.9	
11/19/2014	1:15 PM	53.7	
11/19/2014	4:45 PM	48.7	
11/20/2014	6:00 AM	63.5	
11/20/2014	9:25 AM	66.0	
11/20/2014	1:00 PM	70.1	
11/20/2014	4:50 PM	52.1	
11/21/2014	6:10 AM	66.1	
11/21/2014	9:00 AM	67.7	
11/21/2014	2:40 PM	51.9	
11/22/2014		75.7	
11/24/2014	10:40 AM	76.5	
11/24/2014	1:20 PM	61.0	
11/25/2014	5:00 AM	69.0	
11/25/2014	9:00 AM	59.8	
11/25/2014	1:00 PM	52.7	
11/25/2014	4:30 PM	50.8	
11/26/2014	4:50 AM	66.9	
11/26/2014	9:00 AM	57.5	
11/26/2014	1:00 PM	50.3	
11/27/2014	5:00 AM	43.9	
11/27/2014	9:00 AM	43.6	
11/27/2014	1:00 PM	44.6	
11/28/2014	5:00 AM	42.2	
11/28/2014	9:00 AM	43.8	

Notes:
- *Reading time signifies the start of monitoring the entire heat extraction system*
- *See "Notes on Heat Extraction System Readings" for comments on reading events*

Date	Time	Temperature (deg F)	Notes
RTD: TML 4			
11/29/2014	9:00 AM	53.1	
11/29/2014	4:50 PM	61.9	
11/30/2014	8:50 AM	63.7	
11/30/2014	12:50 PM	66.9	
12/1/2014	5:20 AM	50.8	
12/1/2014	9:00 AM	52.3	
12/1/2014	12:50 PM	50.5	
12/1/2014	5:00 PM	45.4	
12/2/2014	5:10 AM	61.4	
12/2/2014	9:15 AM	53.7	
12/2/2014	1:15 PM	47.3	
12/2/2014	4:50 PM	46.3	
12/3/2014	5:05 AM	44.7	
12/3/2014	9:00 AM	44.7	
12/3/2014	12:45 PM	48.9	
12/3/2014	5:00 PM	47.8	
12/4/2014	9:00 AM	44.5	
12/4/2014	1:10 PM	45.9	
12/4/2014	5:00 PM	47.6	
12/5/2014	5:05 AM	49.8	
12/5/2014	9:00 AM	50.7	
12/6/2014		48.5	
12/8/2014	5:00 AM	47.4	
12/8/2014	9:00 AM	48.2	
12/8/2014	1:30 PM	51.5	
12/8/2014	5:00 PM	52.1	
12/9/2014	5:00 AM	45.4	
12/9/2014	9:00 AM	44.6	
12/9/2014	1:15 PM	45.2	
12/9/2014	5:25 PM	44.7	
12/10/2014	4:30 AM	44.1	
12/10/2014	5:30 AM	44.0	
12/10/2014	9:15 AM	44.3	
12/10/2014	1:15 PM	44.1	
12/10/2014	4:30 PM	44.1	
12/11/2014	5:00 AM	39.4	
12/11/2014	9:00 AM	42.4	
12/11/2014	1:00 PM	44.1	

Notes:
- *Reading time signifies the start of monitoring the entire heat extraction system*
- *See "Notes on Heat Extraction System Readings" for comments on reading events*

Date	Time	Temperature (deg F)	Notes
RTD: TML 4			
12/11/2014	5:00 PM	39.2	
12/12/2014	5:00 AM	44.4	
12/12/2014	9:00 AM	43.3	
12/12/2014	1:00 PM	50.2	
12/12/2014	5:20 PM	52.3	
12/13/2014	9:00 AM	49.3	
12/14/2014	1:00 PM	60.5	
12/15/2014	5:00 AM	56.7	
12/15/2014	9:00 AM	56.5	
12/15/2014	1:00 PM	56.6	
12/15/2014	4:50 PM	58.0	
12/16/2014	4:50 AM	50.6	
12/16/2014	9:05 AM	48.3	
12/16/2014	1:30 PM	46.2	
12/16/2014	4:35 PM	44.9	
12/17/2014	8:15 AM	41.9	
12/17/2014	1:30 PM	45.0	
12/17/2014	5:00 PM	43.4	
12/18/2014	5:20 AM	41.0	
12/18/2014	9:30 AM	41.8	
12/18/2014	1:10 PM	42.7	
12/18/2014	5:00 PM	43.2	
12/19/2014	5:00 AM	42.5	
12/19/2014	8:55 AM	42.4	
12/19/2014	12:55 PM	44.0	
12/19/2014	5:00 PM	40.0	
12/20/2014	2:50 PM	47.4	
12/21/2014	10:30 AM	46.4	
12/22/2014	5:10 AM	47.6	
12/22/2014	9:00 AM	48.6	
12/22/2014	1:00 PM	50.8	
12/22/2014	4:50 PM	53.2	
12/23/2014	5:15 AM	50.6	
12/23/2014	9:05 AM	50.9	
12/23/2014	1:00 PM	52.8	
12/24/2014	9:20 AM	47.7	
12/24/2014	12:20 PM	48.2	
12/24/2014	3:20 PM	47.6	

Notes:
- *Reading time signifies the start of monitoring the entire heat extraction system*
- *See "Notes on Heat Extraction System Readings" for comments on reading events*

Date	Time	Temperature (deg F)	Notes
RTD: TML 4			
12/26/2014	9:00 AM	49.8	
12/26/2014	2:00 PM	56.8	
12/29/2014	5:40 AM	39.8	
12/29/2014	9:00 AM	42.6	
12/29/2014	1:00 PM	54.7	
12/30/2014	5:15 AM	40.1	
12/30/2014	9:00 AM	39.9	
12/30/2014	1:00 PM	42.4	
12/31/2014	5:25 AM	37.3	
12/31/2014	9:00 AM	38.4	
12/31/2014	1:00 PM	44.6	
201 readings		Average: 57.2	

Notes:
- *Reading time signifies the start of monitoring the entire heat extraction system*
- *See "Notes on Heat Extraction System Readings" for comments on reading events*

APPENDIX M – HEAT EXTRACTION DATA

HEAT EXTRACTION THERMOCOUPLE READINGS

Heat Extraction Thermocouple Readings *Bridgeton Landfill*

10/8/2014 to 12/31/2014

Date	Time	Temperature (deg F)	Notes
Thermocouple: GIW-02 @ 105'			
10/8/2014		225.8	
10/10/2014	2:00 PM	198.5	
10/11/2014	2:56 PM	213.0	
10/12/2014	2:35 PM	216.4	
10/13/2014	3:25 PM	174.3	
10/14/2014	2:40 PM	153.0	
10/14/2014	5:45 PM	147.0	
10/15/2014	8:20 AM	141.8	
10/15/2014	1:25 PM	120.3	
10/16/2014	2:25 PM	91.8	
10/17/2014	1:05 PM	93.7	
10/18/2014	2:40 PM	88.4	
10/19/2014	8:04 AM	98.9	
10/19/2014	12:20 PM	108.1	
10/20/2014	2:35 PM	143.9	
10/21/2014	10:30 AM	162.4	
10/22/2014	9:30 AM	177.3	
10/23/2014	4:50 PM	190.6	
10/24/2014	11:05 AM	129.8	
10/24/2014	1:00 PM	123.5	
10/24/2014	4:50 PM	112.9	
10/25/2014	9:01 AM	98.4	
10/25/2014	1:00 PM	100.1	
10/25/2014	5:25 PM	106.7	
10/26/2014	9:20 AM	95.8	
10/26/2014	1:15 PM	103.4	
10/26/2014	5:15 PM	99.8	
10/27/2014	9:00 AM	100.0	
10/27/2014	1:00 PM	96.7	
10/27/2014	5:10 PM	91.9	
10/28/2014	9:00 AM	83.6	
10/28/2014	1:00 PM	80.9	
10/28/2014	4:45 PM	78.7	
10/29/2014	7:00 AM	72.8	
10/29/2014	10:10 AM	73.8	

Notes:
- *Reading time signifies the start of monitoring the entire heat extraction system*
- *See "Notes on Heat Extraction System Readings" for comments on reading events*

Date	Time	Temperature (deg F)	Notes

Thermocouple: GIW-02 @ 105'

10/29/2014	1:10 PM	72.7	
10/29/2014	4:45 PM	72.1	
10/30/2014	7:00 AM	68.7	
10/30/2014	9:00 AM	68.5	
10/30/2014	1:00 PM	69.6	
10/30/2014	4:30 PM	71.0	
10/31/2014	5:00 AM	70.4	
10/31/2014	9:00 AM	68.5	
10/31/2014	1:00 PM	65.3	
10/31/2014	4:30 PM	65.8	
11/1/2014	5:15 AM	61.6	
11/1/2014	4:50 PM	62.8	
11/2/2014	4:45 AM	80.7	
11/2/2014	9:15 AM	82.1	
11/3/2014	5:00 AM	90.1	
11/3/2014	9:00 AM	79.4	
11/3/2014	1:00 PM	78.0	
11/3/2014	4:45 PM	77.0	
11/4/2014	5:00 AM	73.4	
11/4/2014	9:20 AM	73.7	
11/4/2014	4:30 PM	75.6	
11/5/2014	5:05 AM	68.0	
11/5/2014	9:10 AM	67.2	
11/5/2014	12:50 PM	69.3	
11/5/2014	4:30 PM	69.5	
11/6/2014	9:10 AM	66.8	
11/6/2014	1:05 PM	66.8	
11/6/2014	4:40 PM	65.4	
11/7/2014	9:10 AM	62.5	
11/7/2014	1:10 PM	64.9	
11/8/2014	6:30 AM	67.0	
11/8/2014	12:30 PM	67.5	
11/9/2014	7:42 AM	61.3	
11/10/2014	5:00 AM	66.4	
11/10/2014	9:00 AM	67.2	
11/10/2014	12:50 PM	70.9	
11/11/2014	5:00 AM	73.1	
11/11/2014	9:15 AM	69.0	

Notes:
- *Reading time signifies the start of monitoring the entire heat extraction system*
- *See "Notes on Heat Extraction System Readings" for comments on reading events*

Date	Time	Temperature (deg F)	Notes

Thermocouple: GIW-02 @ 105'

11/11/2014	1:15 PM	65.3	
11/11/2014	4:45 PM	63.4	
11/12/2014	5:00 AM	58.1	
11/12/2014	9:00 AM	58.5	
11/12/2014	1:30 PM	60.2	
11/12/2014	4:45 PM	62.3	
11/13/2014	4:50 AM	74.7	
11/13/2014	9:28 AM	74.1	
11/13/2014	1:00 PM	67.3	
11/13/2014	4:50 PM	62.2	
11/14/2014	5:10 AM	76.7	
11/14/2014	9:10 AM	75.1	
11/14/2014	1:00 PM	67.5	
11/15/2014	8:50 AM	80.1	
11/15/2014	5:15 PM	64.2	
11/16/2014	5:00 AM	75.2	
11/16/2014	9:00 AM	77.1	
11/17/2014	4:50 AM	56.3	
11/17/2014	9:15 AM	56.4	
11/17/2014	1:20 PM	56.1	
11/17/2014	4:30 PM	55.6	
11/18/2014	5:00 AM	65.4	
11/18/2014	9:10 AM	66.4	
11/18/2014	1:00 PM	62.2	
11/18/2014	4:40 PM	59.5	
11/19/2014	5:00 AM	69.8	
11/19/2014	9:00 AM	72.2	
11/19/2014	1:15 PM	66.9	
11/19/2014	4:45 PM	63.3	
11/20/2014	6:00 AM	74.1	
11/20/2014	9:25 AM	74.5	
11/20/2014	1:00 PM	77.6	
11/20/2014	4:50 PM	69.0	
11/21/2014	6:10 AM	77.6	
11/21/2014	9:00 AM	77.7	
11/21/2014	2:40 PM	66.8	
11/22/2014		84.1	
11/24/2014	10:40 AM	89.0	

Notes:
- *Reading time signifies the start of monitoring the entire heat extraction system*
- *See "Notes on Heat Extraction System Readings" for comments on reading events*

Date	Time	Temperature (deg F)	Notes

Thermocouple: GIW-02 @ 105'

11/24/2014	1:20 PM	79.7	
11/25/2014	5:00 AM	81.3	
11/25/2014	9:00 AM	76.4	
11/25/2014	1:00 PM	68.7	
11/25/2014	4:30 PM	65.6	
11/26/2014	4:50 AM	78.2	
11/26/2014	9:00 AM	73.5	
11/26/2014	1:00 PM	66.9	
11/27/2014	5:00 AM	61.9	
11/27/2014	9:00 AM	57.4	
11/27/2014	1:00 PM	58.0	
11/28/2014	5:00 AM	56.4	
11/28/2014	9:00 AM	54.7	
11/29/2014	9:00 AM	61.7	
11/29/2014	4:50 PM	68.6	
11/30/2014	8:50 AM	71.5	
11/30/2014	12:50 PM	74.8	
12/1/2014	5:20 AM	64.2	
12/1/2014	9:00 AM	68.4	
12/1/2014	12:50 PM	65.3	
12/1/2014	5:00 PM	60.0	
12/2/2014	5:10 AM	70.8	
12/2/2014	9:15 AM	67.9	
12/2/2014	1:15 PM	61.5	
12/2/2014	4:50 PM	59.4	
12/3/2014	5:05 AM	56.7	
12/3/2014	9:00 AM	55.0	
12/3/2014	12:45 PM	56.9	
12/3/2014	5:00 PM	58.0	
12/4/2014	9:00 AM	57.0	
12/4/2014	1:10 PM	55.8	
12/4/2014	5:00 PM	56.9	
12/5/2014	5:05 AM	59.1	
12/5/2014	9:00 AM	58.9	
12/6/2014		62.4	
12/8/2014	5:00 AM	59.3	
12/8/2014	9:00 AM	59.9	
12/8/2014	1:30 PM	60.4	

Notes:
- *Reading time signifies the start of monitoring the entire heat extraction system*
- *See "Notes on Heat Extraction System Readings" for comments on reading events*

Date	Time	Temperature (deg F)	Notes

Thermocouple: GIW-02 @ 105'

12/8/2014	5:00 PM	62.6	
12/9/2014	5:00 AM	60.2	
12/9/2014	9:00 AM	56.1	
12/9/2014	1:15 PM	57.2	
12/9/2014	5:25 PM	57.5	
12/10/2014	4:30 AM	56.6	
12/10/2014	5:30 AM	58.0	
12/10/2014	9:15 AM	57.3	
12/10/2014	1:15 PM	56.9	
12/10/2014	4:30 PM	56.6	
12/11/2014	5:00 AM	54.8	
12/11/2014	9:00 AM	56.5	
12/11/2014	1:00 PM	55.6	
12/11/2014	5:00 PM	56.8	
12/12/2014	5:00 AM	54.6	
12/12/2014	9:00 AM	57.1	
12/12/2014	1:00 PM	58.8	
12/12/2014	5:20 PM	61.3	
12/13/2014	9:00 AM	59.4	
12/14/2014	1:00 PM	66.6	
12/15/2014	5:00 AM	67.5	
12/15/2014	9:00 AM	67.0	
12/15/2014	1:00 PM	64.5	
12/15/2014	4:50 PM	66.6	
12/16/2014	4:50 AM	62.4	
12/16/2014	9:05 AM	59.8	
12/16/2014	1:30 PM	59.2	
12/16/2014	4:35 PM	57.7	
12/17/2014	8:15 AM	53.8	
12/17/2014	1:30 PM	55.8	
12/17/2014	5:00 PM	55.1	
12/18/2014	5:20 AM	57.0	
12/18/2014	9:30 AM	53.4	
12/18/2014	1:10 PM	56.1	
12/18/2014	5:00 PM	55.7	
12/19/2014	5:00 AM	53.5	
12/19/2014	8:55 AM	52.9	
12/19/2014	12:55 PM	54.6	

Notes:
- *Reading time signifies the start of monitoring the entire heat extraction system*
- *See "Notes on Heat Extraction System Readings" for comments on reading events*

Date	Time	Temperature (deg F)	Notes

Thermocouple: GIW-02 @ 105'

12/19/2014	5:00 PM	54.5	
12/20/2014	2:50 PM	58.0	
12/22/2014	5:10 AM	58.5	
12/22/2014	9:00 AM	58.0	
12/22/2014	1:00 PM	60.6	
12/22/2014	4:50 PM	60.5	
12/23/2014	5:15 AM	62.4	
12/23/2014	9:05 AM	61.7	
12/23/2014	1:00 PM	61.9	
12/24/2014	9:20 AM	62.4	
12/24/2014	12:20 PM	62.1	
12/24/2014	3:20 PM	60.1	
12/26/2014	9:00 AM	59.8	
12/26/2014	2:00 PM	63.8	
12/29/2014	9:00 AM	51.6	
12/29/2014	1:00 PM	55.3	
12/30/2014	5:15 AM	51.5	
12/30/2014	9:00 AM	51.6	
12/30/2014	1:00 PM	52.8	
12/31/2014	5:25 AM	50.3	
12/31/2014	9:00 AM	53.3	
12/31/2014	1:00 PM	55.4	
209 readings		Average: 74.5	

Thermocouple: GIW-02 @ 40'

10/8/2014		212.1	
10/10/2014	2:00 PM	180.0	
10/11/2014	2:56 PM	203.1	
10/12/2014	2:35 PM	207.9	
10/13/2014	3:25 PM	163.7	
10/14/2014	2:40 PM	144.6	
10/14/2014	5:45 PM	133.6	
10/15/2014	8:20 AM	140.6	
10/15/2014	1:25 PM	115.6	
10/16/2014	2:25 PM	88.0	
10/17/2014	1:05 PM	89.0	
10/18/2014	2:40 PM	84.2	
10/19/2014	8:04 AM	92.1	

Notes:
- *Reading time signifies the start of monitoring the entire heat extraction system*
- *See "Notes on Heat Extraction System Readings" for comments on reading events*

Date	Time	Temperature (deg F)	Notes
Thermocouple: GIW-02 @ 40'			
10/19/2014	12:20 PM	104.4	
10/20/2014	2:35 PM	143.4	
10/21/2014	10:30 AM	159.6	
10/22/2014	9:30 AM	173.5	
10/23/2014	4:50 PM	186.5	
10/24/2014	11:05 AM	136.5	
10/24/2014	1:00 PM	122.0	
10/24/2014	4:50 PM	109.0	
10/25/2014	9:01 AM	91.2	
10/25/2014	1:00 PM	94.9	
10/25/2014	5:25 PM	98.8	
10/26/2014	9:20 AM	89.8	
10/26/2014	1:15 PM	96.5	
10/26/2014	5:15 PM	95.0	
10/27/2014	9:00 AM	95.4	
10/27/2014	1:00 PM	95.2	
10/27/2014	5:10 PM	89.1	
10/28/2014	9:00 AM	80.1	
10/28/2014	1:00 PM	78.0	
10/28/2014	4:45 PM	75.8	
10/29/2014	7:00 AM	70.1	
10/29/2014	10:10 AM	70.4	
10/29/2014	1:10 PM	70.1	
10/29/2014	4:45 PM	70.0	
10/30/2014	7:00 AM	66.0	
10/30/2014	9:00 AM	66.1	
10/30/2014	1:00 PM	67.3	
10/30/2014	4:30 PM	69.0	
10/31/2014	5:00 AM	69.1	
10/31/2014	9:00 AM	67.0	
10/31/2014	1:00 PM	65.3	
10/31/2014	4:30 PM	65.0	
11/1/2014	5:15 AM	60.8	
11/1/2014	4:50 PM	62.5	
11/2/2014	4:45 AM	80.0	
11/2/2014	9:15 AM	81.7	
11/3/2014	5:00 AM	89.5	
11/3/2014	9:00 AM	77.7	

Notes:
- *Reading time signifies the start of monitoring the entire heat extraction system*
- *See "Notes on Heat Extraction System Readings" for comments on reading events*

Date	Time	Temperature (deg F)	Notes
Thermocouple: GIW-02 @ 40'			
11/3/2014	1:00 PM	76.0	
11/3/2014	4:45 PM	75.5	
11/4/2014	5:00 AM	72.8	
11/4/2014	9:20 AM	72.1	
11/4/2014	4:30 PM	74.4	
11/5/2014	5:05 AM	66.5	
11/5/2014	9:10 AM	66.0	
11/5/2014	12:50 PM	68.5	
11/5/2014	4:30 PM	68.5	
11/6/2014	9:10 AM	69.0	
11/6/2014	1:05 PM	64.7	
11/6/2014	4:40 PM	63.6	
11/7/2014	9:10 AM	61.1	
11/7/2014	1:10 PM	63.2	
11/8/2014	6:30 AM	65.3	
11/8/2014	12:30 PM	66.2	
11/9/2014	7:42 AM	56.8	
11/10/2014	5:00 AM	65.2	
11/10/2014	9:00 AM	65.2	
11/10/2014	12:50 PM	71.6	
11/11/2014	5:00 AM	71.8	
11/11/2014	9:15 AM	67.4	
11/11/2014	1:15 PM	64.0	
11/11/2014	4:45 PM	62.3	
11/12/2014	5:00 AM	57.4	
11/12/2014	9:00 AM	57.9	
11/12/2014	1:30 PM	59.5	
11/12/2014	4:45 PM	62.6	
11/13/2014	4:50 AM	75.4	
11/13/2014	9:28 AM	74.7	
11/13/2014	1:00 PM	67.5	
11/13/2014	4:50 PM	62.0	
11/14/2014	5:10 AM	76.7	
11/14/2014	9:10 AM	75.3	
11/14/2014	1:00 PM	65.8	
11/15/2014	8:50 AM	79.5	
11/15/2014	5:15 PM	62.7	
11/16/2014	5:00 AM	74.7	

Notes:
- *Reading time signifies the start of monitoring the entire heat extraction system*
- *See "Notes on Heat Extraction System Readings" for comments on reading events*

Date	Time	Temperature (deg F)	Notes
Thermocouple: GIW-02 @ 40'			
11/16/2014	9:00 AM	77.0	
11/17/2014	4:50 AM	54.9	
11/17/2014	9:15 AM	54.7	
11/17/2014	1:20 PM	54.8	
11/17/2014	4:30 PM	54.9	
11/18/2014	5:00 AM	64.3	
11/18/2014	9:10 AM	65.4	
11/18/2014	1:00 PM	60.9	
11/18/2014	4:40 PM	57.9	
11/19/2014	5:00 AM	68.4	
11/19/2014	9:00 AM	70.9	
11/19/2014	1:15 PM	65.9	
11/19/2014	4:45 PM	61.4	
11/20/2014	6:00 AM	72.0	
11/20/2014	9:25 AM	73.1	
11/20/2014	1:00 PM	75.9	
11/20/2014	4:50 PM	68.1	
11/21/2014	6:10 AM	76.8	
11/21/2014	9:00 AM	75.9	
11/21/2014	2:40 PM	65.0	
11/22/2014		82.8	
11/24/2014	10:40 AM	87.3	
11/24/2014	1:20 PM	76.7	
11/25/2014	5:00 AM	78.2	
11/25/2014	9:00 AM	74.2	
11/25/2014	1:00 PM	65.3	
11/25/2014	4:30 PM	62.5	
11/26/2014	4:50 AM	75.8	
11/26/2014	9:00 AM	71.6	
11/26/2014	1:00 PM	64.3	
11/27/2014	5:00 AM	59.2	
11/27/2014	9:00 AM	54.9	
11/27/2014	1:00 PM	54.9	
11/28/2014	5:00 AM	53.9	
11/28/2014	9:00 AM	52.6	
11/29/2014	9:00 AM	59.2	
11/29/2014	4:50 PM	66.8	
11/30/2014	8:50 AM	68.8	

Notes:
- *Reading time signifies the start of monitoring the entire heat extraction system*
- *See "Notes on Heat Extraction System Readings" for comments on reading events*

Date	Time	Temperature (deg F)	Notes
Thermocouple: GIW-02 @ 40'			
11/30/2014	12:50 PM	72.6	
12/1/2014	5:20 AM	64.4	
12/1/2014	9:00 AM	64.0	
12/1/2014	12:50 PM	63.3	
12/1/2014	5:00 PM	57.7	
12/2/2014	5:10 AM	69.5	
12/2/2014	9:15 AM	67.3	
12/2/2014	1:15 PM	60.9	
12/2/2014	4:50 PM	57.9	
12/3/2014	5:05 AM	55.1	
12/3/2014	9:00 AM	53.3	
12/3/2014	12:45 PM	54.3	
12/3/2014	5:00 PM	57.5	
12/4/2014	9:00 AM	57.1	
12/4/2014	1:10 PM	55.0	
12/4/2014	5:00 PM	55.6	
12/5/2014	5:05 AM	57.2	
12/5/2014	9:00 AM	57.5	
12/5/2014	9:00 AM	57.5	
12/6/2014		60.4	
12/8/2014	5:00 AM	57.3	
12/8/2014	9:00 AM	58.4	
12/8/2014	1:30 PM	58.4	
12/8/2014	5:00 PM	60.8	
12/9/2014	5:00 AM	58.2	
12/9/2014	9:00 AM	53.9	
12/9/2014	1:15 PM	55.0	
12/9/2014	5:25 PM	54.6	
12/10/2014	4:30 AM	54.1	
12/10/2014	5:30 AM	55.1	
12/10/2014	9:15 AM	54.3	
12/10/2014	1:15 PM	53.9	
12/10/2014	4:30 PM	54.1	
12/11/2014	5:00 AM	51.8	
12/11/2014	9:00 AM	54.1	
12/11/2014	1:00 PM	52.5	
12/11/2014	5:00 PM	54.1	
12/12/2014	5:00 AM	52.7	

Notes:
- *Reading time signifies the start of monitoring the entire heat extraction system*
- *See "Notes on Heat Extraction System Readings" for comments on reading events*

Date	Time	Temperature (deg F)	Notes
Thermocouple: GIW-02 @ 40'			
12/12/2014	9:00 AM	55.4	
12/12/2014	1:00 PM	57.4	
12/12/2014	5:20 PM	60.0	
12/13/2014	9:00 AM	58.1	
12/14/2014	1:00 PM	65.1	
12/15/2014	5:00 AM	65.7	
12/15/2014	9:00 AM	66.0	
12/15/2014	1:00 PM	66.3	
12/15/2014	4:50 PM	65.2	
12/16/2014	4:50 AM	60.6	
12/16/2014	9:05 AM	58.3	
12/16/2014	1:30 PM	57.3	
12/16/2014	4:35 PM	56.4	
12/17/2014	8:15 AM	52.2	
12/17/2014	1:30 PM	54.3	
12/17/2014	5:00 PM	54.0	
12/18/2014	5:20 AM	55.3	
12/18/2014	9:30 AM	52.0	
12/18/2014	1:10 PM	54.6	
12/18/2014	5:00 PM	54.5	
12/19/2014	5:00 AM	52.4	
12/19/2014	8:55 AM	51.7	
12/19/2014	12:55 PM	52.9	
12/19/2014	5:00 PM	53.0	
12/20/2014	2:50 PM	56.0	
12/22/2014	5:10 AM	57.2	
12/22/2014	9:00 AM	57.3	
12/22/2014	1:00 PM	60.0	
12/22/2014	4:50 PM	60.2	
12/23/2014	5:15 AM	61.4	
12/23/2014	9:05 AM	60.1	
12/23/2014	1:00 PM	60.5	
12/24/2014	9:20 AM	60.9	
12/24/2014	12:20 PM	61.0	
12/24/2014	3:20 PM	59.1	
12/26/2014	9:00 AM	58.7	
12/26/2014	2:00 PM	62.1	
12/29/2014	9:00 AM	51.3	

Notes:
- *Reading time signifies the start of monitoring the entire heat extraction system*
- *See "Notes on Heat Extraction System Readings" for comments on reading events*

Date	Time	Temperature (deg F)	Notes
Thermocouple: GIW-02 @ 40'			
12/29/2014	1:00 PM	53.0	
12/30/2014	5:15 AM	50.9	
12/30/2014	9:00 AM	50.9	
12/30/2014	1:00 PM	51.8	
12/31/2014	5:25 AM	49.7	
12/31/2014	9:00 AM	50.1	
12/31/2014	1:00 PM	53.3	
210 readings		Average: 72.3	
Thermocouple: GIW-03 @ 30'			
10/8/2014		213.7	
10/10/2014	2:00 PM	208.3	
10/11/2014	2:56 PM	214.5	
10/12/2014	2:35 PM	214.2	
10/13/2014	3:25 PM	197.3	
10/14/2014	2:40 PM	186.8	
10/14/2014	5:45 PM	183.3	
10/15/2014	8:20 AM	191.3	
10/15/2014	1:25 PM	170.0	
10/16/2014	2:25 PM	146.0	
10/17/2014	1:05 PM	143.5	
10/18/2014	2:40 PM	129.6	
10/19/2014	8:04 AM	142.7	
10/19/2014	12:20 PM	161.7	
10/20/2014	2:35 PM	195.5	
10/21/2014	10:30 AM	195.5	
10/22/2014	9:30 AM	206.5	
10/23/2014	4:50 PM	209.8	
10/24/2014	11:05 AM	170.4	
10/24/2014	1:00 PM	158.7	
10/24/2014	4:50 PM	148.9	
10/25/2014	9:01 AM	137.2	
10/25/2014	1:00 PM	138.6	
10/25/2014	5:25 PM	143.1	
10/26/2014	9:20 AM	136.1	
10/26/2014	1:15 PM	145.2	
10/26/2014	5:15 PM	143.8	
10/27/2014	9:00 AM	141.6	

Notes:
- *Reading time signifies the start of monitoring the entire heat extraction system*
- *See "Notes on Heat Extraction System Readings" for comments on reading events*

Date	Time	Temperature (deg F)	Notes

Thermocouple: GIW-03 @ 30'

10/27/2014	1:00 PM	137.7	
10/27/2014	5:10 PM	131.4	
10/28/2014	9:00 AM	135.1	
10/28/2014	1:00 PM	125.9	
10/28/2014	4:45 PM	117.5	
10/29/2014	7:00 AM	111.3	
10/29/2014	10:10 AM	110.6	
10/29/2014	1:10 PM	111.3	
10/29/2014	4:45 PM	110.1	
10/30/2014	7:00 AM	109.0	
10/30/2014	9:00 AM	110.1	
10/30/2014	1:00 PM	107.3	
10/30/2014	4:30 PM	110.5	
10/31/2014	5:00 AM	107.5	
10/31/2014	9:00 AM	108.1	
10/31/2014	1:00 PM	107.3	
10/31/2014	4:30 PM	105.3	
11/1/2014	5:15 AM	100.7	
11/1/2014	4:50 PM	101.9	
11/2/2014	4:45 AM	114.6	
11/2/2014	9:15 AM	114.2	
11/3/2014	5:00 AM	120.2	
11/3/2014	9:00 AM	115.3	
11/3/2014	1:00 PM	112.8	
11/3/2014	4:45 PM	114.4	
11/4/2014	5:00 AM	111.6	
11/4/2014	9:20 AM	112.2	
11/4/2014	4:30 PM	116.8	
11/5/2014	5:05 AM	109.7	
11/5/2014	9:10 AM	108.0	
11/5/2014	12:50 PM	110.0	
11/5/2014	4:30 PM	109.7	
11/6/2014	9:10 AM	108.1	
11/6/2014	1:05 PM	109.0	
11/6/2014	4:40 PM	108.3	
11/7/2014	9:10 AM	110.5	
11/7/2014	1:10 PM	110.7	
11/8/2014	6:30 AM	107.6	

Notes:
- *Reading time signifies the start of monitoring the entire heat extraction system*
- *See "Notes on Heat Extraction System Readings" for comments on reading events*

Date	Time	Temperature (deg F)	Notes

Thermocouple: GIW-03 @ 30'

11/8/2014	12:30 PM	100.4	
11/9/2014	7:42 AM	94.0	
11/10/2014	5:00 AM	95.9	
11/10/2014	9:00 AM	99.1	
11/10/2014	12:50 PM	103.1	
11/11/2014	5:00 AM	111.4	
11/11/2014	9:15 AM	111.0	
11/11/2014	1:15 PM	106.9	
11/11/2014	4:45 PM	107.7	
11/12/2014	5:00 AM	106.3	
11/12/2014	9:00 AM	109.0	
11/12/2014	1:30 PM	110.3	
11/12/2014	4:45 PM	110.4	
11/13/2014	4:50 AM	115.5	
11/13/2014	9:28 AM	115.1	
11/13/2014	1:00 PM	113.0	
11/13/2014	4:50 PM	109.3	
11/14/2014	5:10 AM	115.1	
11/14/2014	9:10 AM	114.7	
11/14/2014	1:00 PM	111.0	
11/15/2014	8:50 AM	114.1	
11/15/2014	5:15 PM	106.5	
11/16/2014	5:00 AM	111.9	
11/16/2014	9:00 AM	112.3	
11/17/2014	4:50 AM	99.0	
11/17/2014	9:15 AM	101.5	
11/17/2014	1:20 PM	102.1	
11/17/2014	4:30 PM	100.4	
11/18/2014	5:00 AM	105.1	
11/18/2014	9:10 AM	105.0	
11/18/2014	1:00 PM	105.8	
11/18/2014	4:40 PM	103.6	
11/19/2014	5:00 AM	107.1	
11/19/2014	9:00 AM	107.3	
11/19/2014	1:15 PM	105.6	
11/19/2014	4:45 PM	103.0	
11/20/2014	6:00 AM	107.1	
11/20/2014	9:25 AM	109.0	

Notes:
- *Reading time signifies the start of monitoring the entire heat extraction system*
- *See "Notes on Heat Extraction System Readings" for comments on reading events*

Date	Time	Temperature (deg F)	Notes

Thermocouple: GIW-03 @ 30'

11/20/2014	1:00 PM	110.5	
11/20/2014	4:50 PM	111.4	
11/21/2014	6:10 AM	115.0	
11/21/2014	9:00 AM	116.5	
11/21/2014	2:40 PM	111.2	
11/22/2014		116.3	
11/24/2014	10:40 AM	120.0	
11/24/2014	1:20 PM	113.4	
11/25/2014	5:00 AM	116.3	
11/25/2014	9:00 AM	115.4	
11/25/2014	1:00 PM	109.2	
11/25/2014	4:30 PM	108.6	
11/26/2014	4:50 AM	114.6	
11/26/2014	9:00 AM	112.4	
11/26/2014	1:00 PM	108.7	
11/27/2014	5:00 AM	107.6	
11/27/2014	9:00 AM	105.0	
11/27/2014	1:00 PM	106.1	
11/28/2014	5:00 AM	105.5	
11/28/2014	9:00 AM	100.8	
11/29/2014	9:00 AM	102.8	
11/29/2014	4:50 PM	105.8	
11/30/2014	8:50 AM	108.8	
11/30/2014	12:50 PM	111.3	
12/1/2014	5:20 AM	117.4	
12/1/2014	9:00 AM	117.7	
12/1/2014	12:50 PM	118.3	
12/1/2014	5:00 PM	111.9	
12/2/2014	5:10 AM	114.0	
12/2/2014	9:15 AM	113.4	
12/2/2014	1:15 PM	110.5	
12/2/2014	4:50 PM	107.7	
12/3/2014	5:05 AM	105.5	
12/3/2014	9:00 AM	103.4	
12/3/2014	12:45 PM	103.8	
12/3/2014	5:00 PM	105.0	
12/4/2014	9:00 AM	105.6	
12/4/2014	1:10 PM	102.8	

Notes:
- *Reading time signifies the start of monitoring the entire heat extraction system*
- *See "Notes on Heat Extraction System Readings" for comments on reading events*

Date	Time	Temperature (deg F)	Notes

Thermocouple: GIW-03 @ 30'

12/4/2014	5:00 PM	103.2	
12/5/2014	5:05 AM	103.8	
12/5/2014	9:00 AM	101.8	
12/6/2014		109.3	
12/8/2014	5:00 AM	103.4	
12/8/2014	9:00 AM	106.3	
12/8/2014	1:30 PM	105.7	
12/8/2014	5:00 PM	107.2	
12/9/2014	5:00 AM	109.0	
12/9/2014	9:00 AM	104.9	
12/9/2014	1:15 PM	107.3	
12/9/2014	5:25 PM	109.7	
12/10/2014	4:30 AM	110.7	
12/10/2014	5:30 AM	109.6	
12/10/2014	9:15 AM	110.9	
12/10/2014	1:15 PM	111.0	
12/10/2014	4:30 PM	110.7	
12/11/2014	5:00 AM	111.0	
12/11/2014	9:00 AM	113.5	
12/11/2014	1:00 PM	114.2	
12/11/2014	5:00 PM	113.3	
12/12/2014	5:00 AM	112.4	
12/12/2014	9:00 AM	116.0	
12/12/2014	1:00 PM	117.1	
12/12/2014	5:20 PM	117.3	
12/13/2014	9:00 AM	115.9	
12/14/2014	1:00 PM	118.4	
12/15/2014	5:00 AM	117.5	
12/15/2014	9:00 AM	117.9	
12/15/2014	1:00 PM	115.2	
12/15/2014	4:50 PM	113.3	
12/16/2014	4:50 AM	110.7	
12/16/2014	9:05 AM	110.9	
12/16/2014	1:30 PM	113.3	
12/16/2014	4:35 PM	111.5	
12/17/2014	8:15 AM	111.8	
12/17/2014	1:30 PM	111.7	
12/17/2014	5:00 PM	111.1	

Notes:
- *Reading time signifies the start of monitoring the entire heat extraction system*
- *See "Notes on Heat Extraction System Readings" for comments on reading events*

Date	Time	Temperature (deg F)	Notes

Thermocouple: GIW-03 @ 30'

12/18/2014	5:20 AM	112.3	
12/18/2014	9:30 AM	109.5	
12/18/2014	1:10 PM	111.9	
12/18/2014	5:00 PM	110.6	
12/19/2014	5:00 AM	109.1	
12/19/2014	8:55 AM	108.4	
12/19/2014	12:55 PM	109.5	
12/19/2014	5:00 PM	108.1	
12/20/2014	2:50 PM	110.3	
12/22/2014	5:10 AM	107.2	
12/22/2014	9:00 AM	111.2	
12/22/2014	1:00 PM	107.1	
12/22/2014	4:50 PM	108.7	
12/23/2014	5:15 AM	109.1	
12/23/2014	9:05 AM	107.8	
12/23/2014	1:00 PM	107.9	
12/24/2014	9:20 AM	109.2	
12/24/2014	12:20 PM	110.8	
12/24/2014	3:20 PM	109.6	
12/26/2014	9:00 AM	109.2	
12/26/2014	2:00 PM	112.0	
12/29/2014	9:00 AM	110.8	
12/29/2014	1:00 PM	111.8	
12/30/2014	5:15 AM	111.0	
12/30/2014	9:00 AM	111.9	
12/30/2014	1:00 PM	115.4	
12/31/2014	5:25 AM	121.5	
12/31/2014	9:00 AM	121.8	
12/31/2014	1:00 PM	117.3	
209 readings		Average: 118.4	

Thermocouple: GIW-04 @ 115'

10/8/2014		163.5	
10/10/2014	2:00 PM	188.3	
10/11/2014	2:56 PM	207.5	
10/12/2014	2:35 PM	220.6	
10/13/2014	3:25 PM	190.7	
10/14/2014	2:40 PM	168.1	

Notes:
- *Reading time signifies the start of monitoring the entire heat extraction system*
- *See "Notes on Heat Extraction System Readings" for comments on reading events*

Date	Time	Temperature (deg F)	Notes
Thermocouple: GIW-04 @ 115'			
10/14/2014	5:45 PM	163.0	
10/15/2014	8:20 AM	157.8	
10/15/2014	1:25 PM	129.3	
10/16/2014	2:25 PM	91.3	
10/17/2014	1:05 PM	92.2	
10/18/2014	2:40 PM	89.6	
10/19/2014	8:04 AM	111.3	
10/19/2014	12:20 PM	124.8	
10/20/2014	2:35 PM	169.8	
10/21/2014	10:30 AM	169.8	
10/22/2014	9:30 AM	203.3	
10/23/2014	4:50 PM	218.0	
10/24/2014	11:05 AM	139.0	
10/24/2014	1:00 PM	122.0	
10/24/2014	4:50 PM	129.2	
10/25/2014	9:01 AM	115.7	
10/25/2014	1:00 PM	115.7	
10/25/2014	5:25 PM	127.9	
10/26/2014	9:20 AM	127.1	
10/26/2014	1:15 PM	140.1	
10/26/2014	5:15 PM	138.7	
10/27/2014	9:00 AM	143.1	
10/27/2014	1:00 PM	115.0	
10/27/2014	5:10 PM	100.1	
10/28/2014	9:00 AM	83.3	
10/28/2014	1:00 PM	80.1	
10/28/2014	4:45 PM	77.5	
10/29/2014	7:00 AM	71.1	
10/29/2014	10:10 AM	77.6	
10/29/2014	1:10 PM	87.4	
10/29/2014	4:45 PM	73.3	
10/30/2014	7:00 AM	68.0	
10/30/2014	9:00 AM	68.3	
10/30/2014	1:00 PM	69.2	
10/30/2014	4:30 PM	71.1	
10/31/2014	5:00 AM	69.3	
10/31/2014	9:00 AM	66.8	
10/31/2014	1:00 PM	66.4	

Notes:
- *Reading time signifies the start of monitoring the entire heat extraction system*
- *See "Notes on Heat Extraction System Readings" for comments on reading events*

Date	Time	Temperature (deg F)	Notes
Thermocouple: GIW-04 @ 115'			
10/31/2014	4:30 PM	65.7	
11/1/2014	5:15 AM	59.9	
11/1/2014	4:50 PM	62.7	
11/2/2014	4:45 AM	81.0	
11/2/2014	9:15 AM	83.2	
11/3/2014	5:00 AM	90.4	
11/3/2014	9:00 AM	77.5	
11/3/2014	1:00 PM	77.9	
11/3/2014	4:45 PM	77.1	
11/4/2014	5:00 AM	74.9	
11/4/2014	9:20 AM	75.4	
11/4/2014	1:00 PM	74.7	
11/4/2014	4:30 PM	77.2	
11/5/2014	5:05 AM	68.1	
11/5/2014	9:10 AM	67.6	
11/5/2014	12:50 PM	70.7	
11/5/2014	4:30 PM	70.5	
11/6/2014	9:10 AM	66.0	
11/6/2014	1:05 PM	65.5	
11/6/2014	4:40 PM	64.7	
11/7/2014	9:10 AM	58.8	
11/7/2014	1:10 PM	62.2	
11/8/2014	6:30 AM	64.6	
11/8/2014	12:30 PM	65.3	
11/9/2014	7:42 AM	57.8	
11/10/2014	5:00 AM	63.8	
11/10/2014	9:00 AM	64.4	
11/10/2014	12:50 PM	69.3	
11/11/2014	5:00 AM	68.9	
11/11/2014	9:15 AM	67.7	
11/11/2014	1:15 PM	63.6	
11/11/2014	4:45 PM	62.4	
11/12/2014	5:00 AM	56.9	
11/12/2014	9:00 AM	57.6	
11/12/2014	1:30 PM	61.2	
11/12/2014	4:45 PM	63.4	
11/13/2014	4:50 AM	73.2	
11/13/2014	9:28 AM	74.2	

Notes:
- *Reading time signifies the start of monitoring the entire heat extraction system*
- *See "Notes on Heat Extraction System Readings" for comments on reading events*

Date	Time	Temperature (deg F)	Notes
Thermocouple: GIW-04 @ 115'			
11/13/2014	1:00 PM	65.5	
11/13/2014	4:50 PM	60.3	
11/14/2014	5:10 AM	73.5	
11/14/2014	9:10 AM	75.5	
11/14/2014	1:00 PM	64.0	
11/15/2014	8:50 AM	80.2	
11/15/2014	5:15 PM	63.2	
11/16/2014	5:00 AM	76.6	
11/16/2014	9:00 AM	78.7	
11/17/2014	4:50 AM	58.0	
11/17/2014	9:15 AM	59.8	
11/17/2014	1:20 PM	59.4	
11/17/2014	4:30 PM	57.8	
11/18/2014	5:00 AM	66.8	
11/18/2014	9:10 AM	68.2	
11/18/2014	1:00 PM	63.3	
11/18/2014	4:40 PM	60.5	
11/19/2014	5:00 AM	70.8	
11/19/2014	9:00 AM	73.8	
11/19/2014	1:15 PM	67.6	
11/19/2014	4:45 PM	63.9	
11/20/2014	6:00 AM	-8.1	
11/20/2014	9:25 AM	76.1	
11/20/2014	1:00 PM	79.8	
11/20/2014	4:50 PM	69.6	
11/21/2014	6:10 AM	80.8	
11/21/2014	9:00 AM	79.3	
11/21/2014	2:40 PM	67.6	
11/22/2014		85.5	
11/24/2014	10:40 AM	90.2	
11/24/2014	1:20 PM	78.1	
11/25/2014	5:00 AM	81.5	
11/25/2014	9:00 AM	77.0	
11/25/2014	1:00 PM	68.5	
11/25/2014	4:30 PM	66.0	
11/26/2014	4:50 AM	79.2	
11/26/2014	9:00 AM	73.5	
11/26/2014	1:00 PM	67.5	

Notes:
- *Reading time signifies the start of monitoring the entire heat extraction system*
- *See "Notes on Heat Extraction System Readings" for comments on reading events*

Date	Time	Temperature (deg F)	Notes
Thermocouple: GIW-04 @ 115'			
11/27/2014	5:00 AM	60.0	
11/27/2014	9:00 AM	57.1	
11/27/2014	1:00 PM	57.1	
11/28/2014	5:00 AM	56.4	
11/28/2014	9:00 AM	54.9	
11/29/2014	9:00 AM	64.4	
11/29/2014	4:50 PM	71.9	
11/30/2014	8:50 AM	74.2	
11/30/2014	12:50 PM	77.9	
12/1/2014	5:20 AM	79.5	
12/1/2014	9:00 AM	80.2	
12/1/2014	12:50 PM	72.1	
12/1/2014	5:00 PM	62.4	
12/2/2014	5:10 AM	72.7	
12/2/2014	9:15 AM	69.8	
12/2/2014	1:15 PM	63.0	
12/2/2014	4:50 PM	60.5	
12/3/2014	5:05 AM	57.5	
12/3/2014	9:00 AM	55.9	
12/3/2014	12:45 PM	45.5	
12/3/2014	5:00 PM	45.5	
12/4/2014	9:00 AM	60.4	
12/4/2014	1:10 PM	58.3	
12/4/2014	5:00 PM	59.0	
12/5/2014	5:05 AM	60.4	
12/5/2014	9:00 AM	61.2	
12/6/2014		64.0	
12/8/2014	5:00 AM	59.3	
12/8/2014	9:00 AM	61.7	
12/8/2014	1:30 PM	61.4	
12/8/2014	5:00 PM	63.3	
12/9/2014	5:00 AM	61.0	
12/9/2014	9:00 AM	56.3	
12/9/2014	1:15 PM	57.5	
12/9/2014	5:25 PM	57.3	
12/10/2014	4:30 AM	53.2	
12/10/2014	5:30 AM	57.7	
12/10/2014	9:15 AM	57.9	

Notes:
- *Reading time signifies the start of monitoring the entire heat extraction system*
- *See "Notes on Heat Extraction System Readings" for comments on reading events*

Date	Time	Temperature (deg F)	Notes
Thermocouple: GIW-04 @ 115'			
12/10/2014	1:15 PM	57.6	
12/10/2014	4:30 PM	53.2	
12/11/2014	5:00 AM	54.6	
12/11/2014	9:00 AM	57.2	
12/11/2014	1:00 PM	55.2	
12/11/2014	5:00 PM	57.5	
12/12/2014	5:00 AM	55.5	
12/12/2014	9:00 AM	58.3	
12/12/2014	1:00 PM	60.0	
12/12/2014	5:20 PM	63.6	
12/13/2014	9:00 AM	60.1	
12/14/2014	1:00 PM	68.3	
12/15/2014	5:00 AM	68.8	
12/15/2014	9:00 AM	69.4	
12/15/2014	1:00 PM	67.5	
12/15/2014	4:50 PM	68.1	
12/16/2014	4:50 AM	62.7	
12/16/2014	9:05 AM	61.6	
12/16/2014	1:30 PM	60.3	
12/16/2014	4:35 PM	59.0	
12/17/2014	8:15 AM	55.9	
12/17/2014	1:30 PM	57.9	
12/17/2014	5:00 PM	56.3	
12/18/2014	5:20 AM	56.6	
12/18/2014	9:30 AM	53.8	
12/18/2014	1:10 PM	56.9	
12/18/2014	5:00 PM	56.1	
12/19/2014	5:00 AM	54.0	
12/19/2014	8:55 AM	53.8	
12/19/2014	12:55 PM	55.2	
12/19/2014	5:00 PM	55.1	
12/20/2014	2:50 PM	58.1	
12/22/2014	5:10 AM	58.6	
12/22/2014	9:00 AM	62.6	
12/22/2014	1:00 PM	61.9	
12/22/2014	4:50 PM	62.0	
12/23/2014	5:15 AM	63.0	
12/23/2014	9:05 AM	62.2	

Notes:
- *Reading time signifies the start of monitoring the entire heat extraction system*
- *See "Notes on Heat Extraction System Readings" for comments on reading events*

Date	Time	Temperature (deg F)	Notes
Thermocouple: GIW-04 @ 115'			
12/23/2014	1:00 PM	63.1	
12/24/2014	9:20 AM	61.9	
12/24/2014	12:20 PM	63.0	
12/24/2014	3:20 PM	61.6	
12/26/2014	2:00 PM	65.8	
12/29/2014	9:00 AM	53.1	
12/29/2014	1:00 PM	55.4	
12/30/2014	5:15 AM	52.5	
12/30/2014	9:00 AM	52.0	
12/30/2014	1:00 PM	269.5	
12/31/2014	5:25 AM	51.0	
12/31/2014	9:00 AM	51.3	
12/31/2014	1:00 PM	57.1	
209 readings		Average: 77.5	
Thermocouple: GIW-04 @ 50'			
10/8/2014		166.3	
10/10/2014	2:00 PM	169.0	
10/11/2014	2:56 PM	191.8	
10/12/2014	2:35 PM	198.5	
10/13/2014	3:25 PM	167.0	
10/14/2014	2:40 PM	153.6	
10/14/2014	5:45 PM	143.7	
10/15/2014	8:20 AM	150.7	
10/15/2014	1:25 PM	122.2	
10/16/2014	2:25 PM	90.2	
10/17/2014	1:05 PM	90.9	
10/18/2014	2:40 PM	87.0	
10/19/2014	8:04 AM	97.5	
10/19/2014	12:20 PM	111.9	
10/20/2014	2:35 PM	150.8	
10/21/2014	10:30 AM	150.8	
10/22/2014	9:30 AM	181.7	
10/23/2014	4:50 PM	193.0	
10/24/2014	11:05 AM	144.3	
10/24/2014	1:00 PM	123.0	
10/24/2014	4:50 PM	118.7	
10/25/2014	9:01 AM	107.5	

Notes:
- *Reading time signifies the start of monitoring the entire heat extraction system*
- *See "Notes on Heat Extraction System Readings" for comments on reading events*

Date	Time	Temperature (deg F)	Notes

Thermocouple: GIW-04 @ 50'

10/25/2014	1:00 PM	111.5	
10/25/2014	5:25 PM	118.3	
10/26/2014	9:20 AM	110.9	
10/26/2014	1:15 PM	121.7	
10/26/2014	5:15 PM	121.5	
10/27/2014	9:00 AM	124.0	
10/27/2014	1:00 PM	113.0	
10/27/2014	5:10 PM	99.3	
10/28/2014	9:00 AM	83.0	
10/28/2014	1:00 PM	80.3	
10/28/2014	4:45 PM	77.5	
10/29/2014	7:00 AM	71.2	
10/29/2014	10:10 AM	75.2	
10/29/2014	1:10 PM	84.0	
10/29/2014	4:45 PM	73.7	
10/30/2014	7:00 AM	68.1	
10/30/2014	9:00 AM	68.4	
10/30/2014	1:00 PM	69.2	
10/30/2014	4:30 PM	71.1	
10/31/2014	5:00 AM	69.6	
10/31/2014	9:00 AM	67.5	
10/31/2014	1:00 PM	66.3	
10/31/2014	4:30 PM	66.3	
11/1/2014	5:15 AM	60.9	
11/1/2014	4:50 PM	63.2	
11/2/2014	4:45 AM	80.7	
11/2/2014	9:15 AM	82.4	
11/3/2014	5:00 AM	89.7	
11/3/2014	9:00 AM	78.2	
11/3/2014	1:00 PM	77.7	
11/3/2014	4:45 PM	76.7	
11/4/2014	5:00 AM	74.8	
11/4/2014	9:20 AM	74.0	
11/4/2014	1:00 PM	74.4	
11/4/2014	4:30 PM	77.9	
11/5/2014	5:05 AM	68.2	
11/5/2014	9:10 AM	67.5	
11/5/2014	12:50 PM	70.2	

Notes:
- *Reading time signifies the start of monitoring the entire heat extraction system*
- *See "Notes on Heat Extraction System Readings" for comments on reading events*

Date	Time	Temperature (deg F)	Notes
Thermocouple: GIW-04 @ 50'			
11/5/2014	4:30 PM	69.8	
11/6/2014	9:10 AM	66.5	
11/6/2014	1:05 PM	66.3	
11/6/2014	4:40 PM	65.2	
11/7/2014	9:10 AM	59.3	
11/7/2014	1:10 PM	62.7	
11/8/2014	6:30 AM	64.8	
11/8/2014	12:30 PM	64.9	
11/9/2014	7:42 AM	55.9	
11/10/2014	5:00 AM	61.5	
11/10/2014	9:00 AM	64.4	
11/10/2014	12:50 PM	71.0	
11/11/2014	5:00 AM	69.5	
11/11/2014	9:15 AM	68.5	
11/11/2014	1:15 PM	63.8	
11/11/2014	4:45 PM	63.6	
11/12/2014	5:00 AM	57.3	
11/12/2014	9:00 AM	59.2	
11/12/2014	1:30 PM	62.1	
11/12/2014	4:45 PM	63.6	
11/13/2014	4:50 AM	73.3	
11/13/2014	9:28 AM	74.4	
11/13/2014	1:00 PM	68.1	
11/13/2014	4:50 PM	62.3	
11/14/2014	5:10 AM	72.5	
11/14/2014	9:10 AM	75.0	
11/14/2014	1:00 PM	66.2	
11/15/2014	8:50 AM	79.6	
11/15/2014	5:15 PM	64.5	
11/16/2014	5:00 AM	75.9	
11/16/2014	9:00 AM	77.7	
11/17/2014	4:50 AM	58.5	
11/17/2014	9:15 AM	60.0	
11/17/2014	1:20 PM	59.7	
11/17/2014	4:30 PM	59.3	
11/18/2014	5:00 AM	66.2	
11/18/2014	9:10 AM	67.7	
11/18/2014	1:00 PM	65.4	

Notes:
- *Reading time signifies the start of monitoring the entire heat extraction system*
- *See "Notes on Heat Extraction System Readings" for comments on reading events*

Date	Time	Temperature (deg F)	Notes

Thermocouple: GIW-04 @ 50'

11/18/2014	4:40 PM	62.3	
11/19/2014	5:00 AM	69.7	
11/19/2014	9:00 AM	73.4	
11/19/2014	1:15 PM	69.0	
11/19/2014	4:45 PM	65.0	
11/20/2014	6:00 AM	-9.1	
11/20/2014	9:25 AM	75.7	
11/20/2014	1:00 PM	79.4	
11/20/2014	4:50 PM	71.8	
11/21/2014	6:10 AM	80.5	
11/21/2014	9:00 AM	78.8	
11/21/2014	2:40 PM	69.1	
11/22/2014		84.5	
11/24/2014	10:40 AM	90.0	
11/24/2014	1:20 PM	79.9	
11/25/2014	5:00 AM	80.6	
11/25/2014	9:00 AM	78.5	
11/25/2014	1:00 PM	70.3	
11/25/2014	4:30 PM	67.3	
11/26/2014	4:50 AM	78.1	
11/26/2014	9:00 AM	74.6	
11/26/2014	1:00 PM	68.5	
11/27/2014	5:00 AM	62.4	
11/27/2014	9:00 AM	58.8	
11/27/2014	1:00 PM	58.4	
11/28/2014	5:00 AM	58.0	
11/28/2014	9:00 AM	55.9	
11/29/2014	9:00 AM	64.0	
11/29/2014	4:50 PM	70.6	
11/30/2014	8:50 AM	73.1	
11/30/2014	12:50 PM	76.2	
12/1/2014	5:20 AM	73.6	
12/1/2014	9:00 AM	73.7	
12/1/2014	12:50 PM	73.4	
12/1/2014	5:00 PM	64.1	
12/2/2014	5:10 AM	72.4	
12/2/2014	9:15 AM	71.2	
12/2/2014	1:15 PM	65.8	

Notes:
- *Reading time signifies the start of monitoring the entire heat extraction system*
- *See "Notes on Heat Extraction System Readings" for comments on reading events*

Date	Time	Temperature (deg F)	Notes

Thermocouple: GIW-04 @ 50'

12/2/2014	4:50 PM	62.6	
12/3/2014	5:05 AM	58.7	
12/3/2014	9:00 AM	57.2	
12/3/2014	12:45 PM	46.2	
12/3/2014	5:00 PM	46.2	
12/4/2014	9:00 AM	60.9	
12/4/2014	1:10 PM	58.7	
12/4/2014	5:00 PM	59.5	
12/5/2014	5:05 AM	61.3	
12/5/2014	9:00 AM	62.6	
12/6/2014		65.6	
12/8/2014	9:00 AM	62.8	
12/8/2014	1:30 PM	62.4	
12/8/2014	5:00 PM	64.2	
12/9/2014	5:00 AM	63.0	
12/9/2014	9:00 AM	58.1	
12/9/2014	1:15 PM	59.4	
12/9/2014	5:25 PM	59.1	
12/10/2014	4:30 AM	59.4	
12/10/2014	5:30 AM	59.7	
12/10/2014	9:15 AM	59.2	
12/10/2014	1:15 PM	59.4	
12/10/2014	4:30 PM	59.4	
12/11/2014	5:00 AM	56.7	
12/11/2014	9:00 AM	59.1	
12/11/2014	1:00 PM	57.5	
12/11/2014	5:00 PM	59.5	
12/12/2014	5:00 AM	57.4	
12/12/2014	9:00 AM	59.9	
12/12/2014	1:00 PM	62.0	
12/12/2014	5:20 PM	64.5	
12/13/2014	9:00 AM	61.3	
12/14/2014	1:00 PM	69.1	
12/15/2014	5:00 AM	69.0	
12/15/2014	9:00 AM	70.4	
12/15/2014	1:00 PM	68.0	
12/15/2014	4:50 PM	68.6	
12/16/2014	4:50 AM	63.9	

Notes:
- *Reading time signifies the start of monitoring the entire heat extraction system*
- *See "Notes on Heat Extraction System Readings" for comments on reading events*

Date	Time	Temperature (deg F)	Notes

Thermocouple: GIW-04 @ 50'

12/16/2014	9:05 AM	63.5	
12/16/2014	1:30 PM	62.3	
12/16/2014	4:35 PM	61.1	
12/17/2014	8:15 AM	57.3	
12/17/2014	1:30 PM	59.4	
12/17/2014	5:00 PM	58.4	
12/18/2014	5:20 AM	59.1	
12/18/2014	9:30 AM	55.9	
12/18/2014	1:10 PM	59.0	
12/18/2014	5:00 PM	58.5	
12/19/2014	5:00 AM	56.0	
12/19/2014	8:55 AM	55.9	
12/19/2014	12:55 PM	57.2	
12/19/2014	5:00 PM	57.1	
12/20/2014	2:50 PM	59.9	
12/22/2014	5:10 AM	60.3	
12/22/2014	9:00 AM	65.2	
12/22/2014	1:00 PM	63.5	
12/22/2014	4:50 PM	63.5	
12/23/2014	5:15 AM	64.4	
12/23/2014	9:05 AM	63.6	
12/23/2014	1:00 PM	64.4	
12/24/2014	9:20 AM	64.1	
12/24/2014	12:20 PM	64.7	
12/24/2014	3:20 PM	64.1	
12/26/2014	9:00 AM	61.8	
12/26/2014	2:00 PM	66.5	
12/29/2014	9:00 AM	54.4	
12/29/2014	1:00 PM	57.8	
12/30/2014	5:15 AM	54.3	
12/30/2014	9:00 AM	54.7	
12/30/2014	1:00 PM	55.4	
12/31/2014	5:25 AM	53.2	
12/31/2014	9:00 AM	51.4	
12/31/2014	1:00 PM	58.5	
209 readings		Average: 75.5	

Thermocouple: GIW-05 @ 50'

Notes:
- *Reading time signifies the start of monitoring the entire heat extraction system*
- *See "Notes on Heat Extraction System Readings" for comments on reading events*

Date	Time	Temperature (deg F)	Notes
Thermocouple: GIW-05 @ 50'			
10/8/2014		211.6	
10/10/2014	2:00 PM	153.4	
10/11/2014	2:56 PM	193.4	
10/12/2014	2:35 PM	201.3	
10/13/2014	3:25 PM	118.7	
10/14/2014	2:40 PM	117.4	
10/14/2014	5:45 PM	102.2	
10/15/2014	8:20 AM	113.8	
10/15/2014	1:25 PM	93.8	
10/16/2014	2:25 PM	82.4	
10/17/2014	1:05 PM	78.1	
10/18/2014	2:40 PM	73.4	
10/19/2014	8:04 AM	86.0	
10/19/2014	12:20 PM	105.9	
10/20/2014	2:35 PM	142.3	
10/21/2014	10:30 AM	142.3	
10/22/2014	9:30 AM	166.7	
10/23/2014	4:50 PM	176.2	
10/24/2014	11:05 AM	98.0	
10/24/2014	1:00 PM	89.7	
10/24/2014	4:50 PM	86.4	
10/25/2014	9:01 AM	80.8	
10/25/2014	1:00 PM	87.2	
10/25/2014	5:25 PM	94.3	
10/26/2014	9:20 AM	82.2	
10/26/2014	1:15 PM	97.8	
10/26/2014	5:15 PM	94.9	
10/27/2014	9:00 AM	91.1	
10/27/2014	1:00 PM	87.0	
10/27/2014	5:10 PM	82.9	
10/28/2014	9:00 AM	72.5	
10/28/2014	1:00 PM	97.8	
10/28/2014	4:45 PM	104.0	
10/29/2014	7:00 AM	62.4	
10/29/2014	10:10 AM	64.3	
10/29/2014	1:10 PM	63.7	
10/29/2014	4:45 PM	63.7	
10/30/2014	7:00 AM	59.5	

Notes:
- *Reading time signifies the start of monitoring the entire heat extraction system*
- *See "Notes on Heat Extraction System Readings" for comments on reading events*

Date	Time	Temperature (deg F)	Notes
Thermocouple: GIW-05 @ 50'			
10/30/2014	9:00 AM	61.0	
10/30/2014	1:00 PM	62.1	
10/30/2014	4:30 PM	64.2	
10/31/2014	5:00 AM	61.8	
10/31/2014	9:00 AM	59.0	
10/31/2014	1:00 PM	58.6	
10/31/2014	4:30 PM	58.7	
11/1/2014	5:15 AM	52.1	
11/1/2014	4:50 PM	56.2	
11/2/2014	4:45 AM	76.2	
11/2/2014	9:15 AM	78.6	
11/3/2014	5:00 AM	83.9	
11/3/2014	9:00 AM	67.6	
11/3/2014	1:00 PM	69.5	
11/3/2014	4:45 PM	69.3	
11/4/2014	5:00 AM	67.0	
11/4/2014	9:20 AM	66.4	
11/4/2014	1:00 PM	66.2	
11/4/2014	4:30 PM	70.6	
11/5/2014	5:05 AM	59.9	
11/5/2014	9:10 AM	60.5	
11/5/2014	12:50 PM	64.4	
11/5/2014	4:30 PM	63.8	
11/6/2014	9:10 AM	58.9	
11/6/2014	1:05 PM	59.2	
11/6/2014	4:40 PM	52.6	
11/7/2014	9:10 AM	53.9	
11/7/2014	1:10 PM	57.2	
11/8/2014	6:30 AM	59.7	
11/8/2014	12:30 PM	63.1	
11/9/2014	7:42 AM	51.1	
11/10/2014	5:00 AM	57.0	
11/10/2014	9:00 AM	60.4	
11/10/2014	12:50 PM	64.3	
11/11/2014	5:00 AM	62.6	
11/11/2014	9:15 AM	58.1	
11/11/2014	1:15 PM	54.3	
11/11/2014	4:45 PM	53.8	

Notes:
- *Reading time signifies the start of monitoring the entire heat extraction system*
- *See "Notes on Heat Extraction System Readings" for comments on reading events*

Date	Time	Temperature (deg F)	Notes
Thermocouple: GIW-05 @ 50'			
11/12/2014	5:00 AM	51.8	
11/12/2014	9:00 AM	50.3	
11/12/2014	1:30 PM	54.2	
11/12/2014	4:45 PM	58.0	
11/13/2014	4:50 AM	69.1	
11/13/2014	9:28 AM	69.4	
11/13/2014	1:00 PM	57.2	
11/13/2014	4:50 PM	51.4	
11/14/2014	5:10 AM	68.1	
11/14/2014	9:10 AM	72.2	
11/14/2014	1:00 PM	56.9	
11/15/2014	8:50 AM	74.1	
11/15/2014	5:15 PM	52.5	
11/16/2014	5:00 AM	71.1	
11/16/2014	9:00 AM	71.5	
11/17/2014	4:50 AM	50.1	
11/17/2014	9:15 AM	48.5	
11/17/2014	1:20 PM	47.8	
11/17/2014	4:30 PM	48.4	
11/18/2014	5:00 AM	65.5	
11/18/2014	9:10 AM	61.2	
11/18/2014	1:00 PM	54.5	
11/18/2014	4:40 PM	51.4	
11/19/2014	5:00 AM	66.5	
11/19/2014	9:00 AM	67.4	
11/19/2014	1:15 PM	58.3	
11/19/2014	4:45 PM	54.1	
11/20/2014	6:00 AM	67.6	
11/20/2014	9:25 AM	70.1	
11/20/2014	1:00 PM	75.1	
11/20/2014	4:50 PM	59.0	
11/21/2014	6:10 AM	74.7	
11/21/2014	9:00 AM	72.7	
11/21/2014	9:00 AM	72.7	
11/21/2014	2:40 PM	57.1	
11/22/2014		78.9	
11/24/2014	10:40 AM	80.3	
11/24/2014	1:20 PM	64.3	

Notes:
- *Reading time signifies the start of monitoring the entire heat extraction system*
- *See "Notes on Heat Extraction System Readings" for comments on reading events*

Date	Time	Temperature (deg F)	Notes
Thermocouple: GIW-05 @ 50'			
11/25/2014	5:00 AM	77.5	
11/25/2014	9:00 AM	66.5	
11/25/2014	1:00 PM	58.2	
11/25/2014	4:30 PM	55.5	
11/26/2014	4:50 AM	75.4	
11/26/2014	9:00 AM	64.1	
11/26/2014	1:00 PM	57.2	
11/27/2014	5:00 AM	51.7	
11/27/2014	9:00 AM	48.3	
11/27/2014	1:00 PM	49.4	
11/28/2014	5:00 AM	49.5	
11/28/2014	9:00 AM	48.4	
11/29/2014	9:00 AM	54.6	
11/29/2014	4:50 PM	64.0	
11/30/2014	8:50 AM	64.4	
11/30/2014	12:50 PM	69.0	
12/1/2014	5:20 AM	61.0	
12/1/2014	9:00 AM	59.4	
12/1/2014	12:50 PM	57.3	
12/1/2014	5:00 PM	51.0	
12/2/2014	5:10 AM	69.8	
12/2/2014	9:15 AM	60.9	
12/2/2014	1:15 PM	54.1	
12/2/2014	4:50 PM	51.7	
12/3/2014	5:05 AM	53.1	
12/3/2014	9:00 AM	48.4	
12/3/2014	12:45 PM	45.7	
12/3/2014	5:00 PM	59.3	
12/4/2014	9:00 AM	53.6	
12/4/2014	1:10 PM	50.3	
12/4/2014	5:00 PM	51.2	
12/5/2014	5:05 AM	52.5	
12/5/2014	9:00 AM	53.4	
12/6/2014		56.5	
12/8/2014	5:00 AM	60.5	
12/8/2014	5:00 AM	54.2	
12/8/2014	9:00 AM	54.9	
12/8/2014	1:30 PM	54.6	

Notes:
- *Reading time signifies the start of monitoring the entire heat extraction system*
- *See "Notes on Heat Extraction System Readings" for comments on reading events*

Date	Time	Temperature (deg F)	Notes
Thermocouple: GIW-05 @ 50'			
12/8/2014	5:00 PM	56.4	
12/9/2014	5:00 AM	53.0	
12/9/2014	9:00 AM	48.4	
12/9/2014	1:15 PM	49.7	
12/9/2014	5:25 PM	50.0	
12/10/2014	4:30 AM	49.8	
12/10/2014	5:30 AM	52.0	
12/10/2014	9:15 AM	50.0	
12/10/2014	1:15 PM	50.2	
12/10/2014	4:30 PM	49.8	
12/11/2014	5:00 AM	49.2	
12/11/2014	9:00 AM	48.5	
12/11/2014	1:00 PM	50.2	
12/11/2014	5:00 PM	50.9	
12/12/2014	5:00 AM	47.0	
12/12/2014	9:00 AM	50.6	
12/12/2014	1:00 PM	54.1	
12/12/2014	5:20 PM	57.3	
12/13/2014	9:00 AM	53.2	
12/14/2014	1:00 PM	62.8	
12/15/2014	5:00 AM	60.6	
12/15/2014	9:00 AM	61.5	
12/15/2014	1:00 PM	61.2	
12/15/2014	4:50 PM	60.4	
12/16/2014	4:50 AM	56.8	
12/16/2014	9:05 AM	52.7	
12/16/2014	1:30 PM	52.2	
12/16/2014	4:35 PM	51.1	
12/17/2014	8:15 AM	48.4	
12/17/2014	1:30 PM	51.6	
12/17/2014	5:00 PM	41.4	
12/18/2014	5:20 AM	48.3	
12/18/2014	9:30 AM	45.8	
12/18/2014	1:10 PM	49.6	
12/18/2014	5:00 PM	50.5	
12/19/2014	5:00 AM	49.2	
12/19/2014	8:55 AM	47.3	
12/19/2014	12:55 PM	50.0	

Notes:
- *Reading time signifies the start of monitoring the entire heat extraction system*
- *See "Notes on Heat Extraction System Readings" for comments on reading events*

Date	Time	Temperature (deg F)	Notes
Thermocouple: GIW-05 @ 50'			
12/19/2014	5:00 PM	48.3	
12/20/2014	2:50 PM	51.1	
12/22/2014	5:10 AM	53.9	
12/22/2014	9:00 AM	52.0	
12/22/2014	1:00 PM	59.2	
12/22/2014	4:50 PM	59.3	
12/23/2014	5:15 AM	57.8	
12/23/2014	9:05 AM	56.0	
12/23/2014	1:00 PM	56.6	
12/24/2014	9:20 AM	54.5	
12/24/2014	12:20 PM	57.3	
12/24/2014	3:20 PM	54.6	
12/26/2014	9:00 AM	54.0	
12/26/2014	2:00 PM	60.0	
12/29/2014	9:00 AM	46.0	
12/29/2014	1:00 PM	48.6	
12/30/2014	5:15 AM	44.9	
12/30/2014	9:00 AM	45.6	
12/30/2014	1:00 PM	50.3	
12/31/2014	5:25 AM	43.7	
12/31/2014	9:00 AM	50.4	
12/31/2014	1:00 PM	53.8	
212 readings		Average: 66.3	
Thermocouple: GIW-06 @ 50'			
10/8/2014		218.2	
10/10/2014	2:00 PM	161.8	
10/11/2014	2:56 PM	212.1	
10/12/2014	2:35 PM	215.6	
10/13/2014	3:25 PM	121.9	
10/14/2014	2:40 PM	111.7	
10/14/2014	5:45 PM	102.1	
10/15/2014	8:20 AM	111.3	
10/15/2014	1:25 PM	90.6	
10/16/2014	2:25 PM	82.5	
10/17/2014	1:05 PM	80.7	
10/18/2014	2:40 PM	74.2	
10/19/2014	8:04 AM	95.2	

Notes:
- *Reading time signifies the start of monitoring the entire heat extraction system*
- *See "Notes on Heat Extraction System Readings" for comments on reading events*

Date	Time	Temperature (deg F)	Notes

Thermocouple: GIW-06 @ 50'

10/19/2014	12:20 PM	129.3	
10/20/2014	2:35 PM	186.7	
10/21/2014	10:30 AM	186.7	
10/22/2014	9:30 AM	214.5	
10/23/2014	4:50 PM	215.0	
10/24/2014	11:05 AM	95.5	
10/24/2014	1:00 PM	92.0	
10/24/2014	4:50 PM	86.7	
10/25/2014	9:01 AM	80.8	
10/25/2014	1:00 PM	89.4	
10/25/2014	5:25 PM	92.3	
10/26/2014	9:20 AM	78.3	
10/26/2014	1:15 PM	91.8	
10/26/2014	5:15 PM	88.8	
10/27/2014	9:00 AM	87.2	
10/27/2014	1:00 PM	88.4	
10/27/2014	5:10 PM	84.6	
10/28/2014	9:00 AM	75.0	
10/28/2014	1:00 PM	74.0	
10/28/2014	4:45 PM	70.0	
10/29/2014	7:00 AM	64.0	
10/29/2014	10:10 AM	65.5	
10/29/2014	1:10 PM	66.4	
10/29/2014	4:45 PM	66.5	
10/30/2014	7:00 AM	61.3	
10/30/2014	9:00 AM	64.1	
10/30/2014	1:00 PM	65.5	
10/30/2014	4:30 PM	67.7	
10/31/2014	5:00 AM	64.4	
10/31/2014	9:00 AM	61.1	
10/31/2014	1:00 PM	61.8	
10/31/2014	4:30 PM	61.6	
11/1/2014	5:15 AM	53.6	
11/1/2014	4:50 PM	60.1	
11/2/2014	4:45 AM	80.6	
11/2/2014	9:15 AM	83.1	
11/3/2014	5:00 AM	88.4	
11/3/2014	9:00 AM	70.6	

Notes:
- *Reading time signifies the start of monitoring the entire heat extraction system*
- *See "Notes on Heat Extraction System Readings" for comments on reading events*

Date	Time	Temperature (deg F)	Notes

Thermocouple: GIW-06 @ 50'

11/3/2014	1:00 PM	73.7	
11/3/2014	4:45 PM	73.1	
11/4/2014	5:00 AM	71.7	
11/4/2014	9:20 AM	70.8	
11/4/2014	1:00 PM	70.3	
11/4/2014	4:30 PM	76.8	
11/5/2014	5:05 AM	63.3	
11/5/2014	9:10 AM	63.3	
11/5/2014	12:50 PM	68.2	
11/5/2014	4:30 PM	68.0	
11/6/2014	9:10 AM	63.4	
11/6/2014	1:05 PM	63.2	
11/6/2014	4:40 PM	62.4	
11/7/2014	9:10 AM	57.8	
11/7/2014	1:10 PM	61.7	
11/8/2014	6:30 AM	65.4	
11/8/2014	12:30 PM	67.6	
11/9/2014	7:42 AM	55.6	
11/10/2014	5:00 AM	60.6	
11/10/2014	9:00 AM	63.3	
11/10/2014	12:50 PM	72.5	
11/11/2014	5:00 AM	65.7	
11/11/2014	9:15 AM	62.7	
11/11/2014	1:15 PM	57.6	
11/11/2014	4:45 PM	57.4	
11/12/2014	5:00 AM	54.3	
11/12/2014	9:00 AM	55.1	
11/12/2014	1:30 PM	58.6	
11/12/2014	4:45 PM	63.5	
11/13/2014	4:50 AM	72.8	
11/13/2014	9:28 AM	73.7	
11/13/2014	1:00 PM	62.2	
11/13/2014	4:50 PM	56.0	
11/14/2014	5:10 AM	73.6	
11/14/2014	9:10 AM	74.8	
11/14/2014	1:00 PM	60.1	
11/15/2014	8:50 AM	78.5	
11/15/2014	5:15 PM	55.4	

Notes:
- *Reading time signifies the start of monitoring the entire heat extraction system*
- *See "Notes on Heat Extraction System Readings" for comments on reading events*

Date	Time	Temperature (deg F)	Notes

Thermocouple: GIW-06 @ 50'

11/16/2014	5:00 AM	76.0	
11/16/2014	9:00 AM	77.3	
11/17/2014	4:50 AM	52.7	
11/17/2014	9:15 AM	54.1	
11/17/2014	1:20 PM	55.7	
11/17/2014	4:30 PM	38.2	
11/18/2014	5:00 AM	68.2	
11/18/2014	9:10 AM	69.0	
11/18/2014	1:00 PM	59.8	
11/18/2014	4:40 PM	55.7	
11/19/2014	5:00 AM	71.4	
11/19/2014	9:00 AM	73.8	
11/19/2014	1:15 PM	63.3	
11/19/2014	4:45 PM	59.0	
11/20/2014	6:00 AM	71.5	
11/20/2014	9:25 AM	72.0	
11/20/2014	1:00 PM	79.5	
11/20/2014	4:50 PM	62.9	
11/21/2014	6:10 AM	78.7	
11/21/2014	9:00 AM	78.1	
11/21/2014	2:40 PM	60.6	
11/22/2014		84.7	
11/24/2014	10:40 AM	86.7	
11/24/2014	1:20 PM	68.2	
11/25/2014	5:00 AM	81.9	
11/25/2014	9:00 AM	70.4	
11/25/2014	1:00 PM	61.5	
11/25/2014	4:30 PM	59.2	
11/26/2014	4:50 AM	79.2	
11/26/2014	9:00 AM	67.8	
11/26/2014	1:00 PM	60.7	
11/27/2014	5:00 AM	53.5	
11/27/2014	9:00 AM	51.0	
11/27/2014	1:00 PM	53.0	
11/28/2014	5:00 AM	53.4	
11/28/2014	9:00 AM	53.2	
11/29/2014	9:00 AM	59.9	
11/29/2014	4:50 PM	69.1	

Notes:
- *Reading time signifies the start of monitoring the entire heat extraction system*
- *See "Notes on Heat Extraction System Readings" for comments on reading events*

Date	Time	Temperature (deg F)	Notes

Thermocouple: GIW-06 @ 50'

11/30/2014	8:50 AM	69.7	
11/30/2014	12:50 PM	73.8	
12/1/2014	5:20 AM	64.6	
12/1/2014	9:00 AM	62.4	
12/1/2014	12:50 PM	61.3	
12/1/2014	5:00 PM	55.3	
12/2/2014	5:10 AM	74.9	
12/2/2014	9:15 AM	65.4	
12/2/2014	1:15 PM	59.0	
12/2/2014	4:50 PM	56.9	
12/3/2014	5:05 AM	56.5	
12/3/2014	9:00 AM	53.2	
12/3/2014	12:45 PM	57.2	
12/3/2014	5:00 PM	57.2	
12/4/2014	9:00 AM	58.7	
12/4/2014	1:10 PM	55.6	
12/4/2014	5:00 PM	56.3	
12/5/2014	5:05 AM	57.8	
12/5/2014	9:00 AM	58.6	
12/6/2014		62.3	
12/8/2014	5:00 AM	56.4	
12/8/2014	9:00 AM	58.7	
12/8/2014	1:30 PM	60.0	
12/8/2014	5:00 PM	61.0	
12/9/2014	5:00 AM	56.5	
12/9/2014	9:00 AM	52.2	
12/9/2014	1:15 PM	54.4	
12/9/2014	5:25 PM	54.5	
12/10/2014	4:30 AM	54.8	
12/10/2014	5:30 AM	55.2	
12/10/2014	9:15 AM	53.5	
12/10/2014	1:15 PM	54.0	
12/10/2014	4:30 PM	54.8	
12/11/2014	5:00 AM	53.3	
12/11/2014	9:00 AM	52.3	
12/11/2014	1:00 PM	52.3	
12/11/2014	5:00 PM	54.8	
12/12/2014	5:00 AM	52.1	

Notes:
- *Reading time signifies the start of monitoring the entire heat extraction system*
- *See "Notes on Heat Extraction System Readings" for comments on reading events*

Date	Time	Temperature (deg F)	Notes

Thermocouple: GIW-06 @ 50'

12/12/2014	9:00 AM	55.4	
12/12/2014	1:00 PM	57.7	
12/12/2014	5:20 PM	60.5	
12/13/2014	9:00 AM	55.3	
12/14/2014	1:00 PM	67.5	
12/15/2014	5:00 AM	66.0	
12/15/2014	9:00 AM	66.2	
12/15/2014	1:00 PM	66.2	
12/15/2014	4:50 PM	66.0	
12/16/2014	4:50 AM	61.3	
12/16/2014	9:05 AM	58.0	
12/16/2014	1:30 PM	58.3	
12/16/2014	4:35 PM	56.4	
12/17/2014	8:15 AM	51.1	
12/17/2014	1:30 PM	54.0	
12/17/2014	5:00 PM	53.1	
12/18/2014	5:20 AM	54.5	
12/18/2014	9:30 AM	50.3	
12/18/2014	1:10 PM	55.0	
12/18/2014	5:00 PM	53.3	
12/19/2014	5:00 AM	53.9	
12/19/2014	8:55 AM	52.1	
12/19/2014	12:55 PM	55.2	
12/19/2014	5:00 PM	52.3	
12/20/2014	2:50 PM	56.0	
12/22/2014	5:10 AM	58.2	
12/22/2014	9:00 AM	56.8	
12/22/2014	1:00 PM	64.1	
12/22/2014	4:50 PM	64.0	
12/23/2014	5:15 AM	62.1	
12/23/2014	9:05 AM	60.2	
12/23/2014	1:00 PM	61.3	
12/24/2014	9:20 AM	59.3	
12/24/2014	12:20 PM	62.4	
12/24/2014	3:20 PM	58.0	
12/26/2014	9:00 AM	61.0	
12/26/2014	2:00 PM	65.7	
12/29/2014	5:40 AM	46.1	

Notes:
- *Reading time signifies the start of monitoring the entire heat extraction system*
- *See "Notes on Heat Extraction System Readings" for comments on reading events*

Date	Time	Temperature (deg F)	Notes

Thermocouple: GIW-06 @ 50'

12/29/2014	9:00 AM	48.2	
12/29/2014	1:00 PM	53.4	
12/30/2014	5:15 AM	49.3	
12/30/2014	9:00 AM	50.0	
12/30/2014	1:00 PM	53.7	
12/31/2014	5:25 AM	48.5	
12/31/2014	9:00 AM	50.5	
12/31/2014	1:00 PM	59.2	
211 readings		Average: 70.6	

Thermocouple: GIW-07 @ 115'

10/8/2014		216.7	
10/10/2014	2:00 PM	199.5	
10/11/2014	2:56 PM	205.6	
10/12/2014	2:35 PM	208.6	
10/13/2014	3:25 PM	186.9	
10/14/2014	2:40 PM	168.1	
10/14/2014	5:45 PM	163.0	
10/15/2014	8:20 AM	136.3	
10/15/2014	1:25 PM	111.0	
10/16/2014	2:25 PM	85.9	
10/17/2014	1:05 PM	87.4	
10/18/2014	2:40 PM	83.8	
10/19/2014	8:04 AM	94.9	
10/19/2014	12:20 PM	108.1	
10/20/2014	2:35 PM	136.2	
10/21/2014	10:30 AM	136.2	
10/22/2014	9:30 AM	158.1	
10/23/2014	4:50 PM	169.1	
10/24/2014	11:05 AM	121.9	
10/24/2014	1:00 PM	111.4	
10/24/2014	4:50 PM	111.4	
10/25/2014	9:01 AM	98.4	
10/25/2014	1:00 PM	108.1	
10/25/2014	5:25 PM	118.4	
10/26/2014	9:20 AM	114.4	
10/26/2014	1:15 PM	127.2	
10/26/2014	5:15 PM	125.6	

Notes:
- *Reading time signifies the start of monitoring the entire heat extraction system*
- *See "Notes on Heat Extraction System Readings" for comments on reading events*

Date	Time	Temperature (deg F)	Notes
Thermocouple: GIW-07 @ 115'			
10/27/2014	9:00 AM	137.7	
10/27/2014	1:00 PM	108.5	
10/27/2014	5:10 PM	94.5	
10/28/2014	9:00 AM	79.3	
10/28/2014	1:00 PM	76.9	
10/28/2014	4:45 PM	72.9	
10/29/2014	7:00 AM	66.7	
10/29/2014	10:10 AM	66.4	
10/29/2014	1:10 PM	68.0	
10/29/2014	4:45 PM	67.4	
10/30/2014	7:00 AM	63.1	
10/30/2014	9:00 AM	64.2	
10/30/2014	1:00 PM	65.2	
10/30/2014	4:30 PM	67.2	
10/31/2014	5:00 AM	64.3	
10/31/2014	9:00 AM	62.5	
10/31/2014	1:00 PM	62.9	
10/31/2014	4:30 PM	62.4	
11/1/2014	5:15 AM	54.9	
11/1/2014	4:50 PM	59.6	
11/2/2014	4:45 AM	77.6	
11/2/2014	9:15 AM	79.6	
11/3/2014	5:00 AM	86.5	
11/3/2014	9:00 AM	73.1	
11/3/2014	1:00 PM	74.1	
11/3/2014	4:45 PM	72.6	
11/4/2014	5:00 AM	70.0	
11/4/2014	9:20 AM	69.8	
11/4/2014	1:00 PM	69.6	
11/4/2014	4:30 PM	71.8	
11/5/2014	5:05 AM	62.8	
11/5/2014	9:10 AM	62.7	
11/5/2014	12:50 PM	66.2	
11/5/2014	4:30 PM	65.9	
11/6/2014	9:10 AM	62.5	
11/6/2014	1:05 PM	62.3	
11/6/2014	4:40 PM	60.6	
11/7/2014	9:10 AM	58.5	

Notes:
- *Reading time signifies the start of monitoring the entire heat extraction system*
- *See "Notes on Heat Extraction System Readings" for comments on reading events*

Date	Time	Temperature (deg F)	Notes
Thermocouple: GIW-07 @ 115'			
11/7/2014	1:10 PM	61.7	
11/8/2014	6:30 AM	63.7	
11/8/2014	12:30 PM	67.5	
11/9/2014	7:42 AM	57.7	
11/10/2014	5:00 AM	62.6	
11/10/2014	9:00 AM	63.2	
11/10/2014	12:50 PM	67.4	
11/11/2014	5:00 AM	65.8	
11/11/2014	9:15 AM	63.6	
11/11/2014	1:15 PM	59.6	
11/11/2014	4:45 PM	58.7	
11/12/2014	5:00 AM	55.2	
11/12/2014	9:00 AM	55.3	
11/12/2014	1:30 PM	58.2	
11/12/2014	4:45 PM	60.4	
11/13/2014	4:50 AM	68.6	
11/13/2014	9:28 AM	70.3	
11/13/2014	1:00 PM	62.5	
11/13/2014	4:50 PM	58.3	
11/14/2014	5:10 AM	69.6	
11/14/2014	9:10 AM	73.3	
11/14/2014	1:00 PM	60.8	
11/15/2014	8:50 AM	74.7	
11/15/2014	5:15 PM	56.7	
11/16/2014	5:00 AM	72.4	
11/16/2014	9:00 AM	73.7	
11/17/2014	4:50 AM	52.5	
11/17/2014	9:15 AM	52.3	
11/17/2014	1:20 PM	53.1	
11/17/2014	4:30 PM	52.3	
11/18/2014	5:00 AM	62.5	
11/18/2014	9:10 AM	63.0	
11/18/2014	1:00 PM	58.8	
11/18/2014	4:40 PM	55.7	
11/19/2014	5:00 AM	66.5	
11/19/2014	9:00 AM	69.0	
11/19/2014	1:15 PM	62.5	
11/19/2014	4:45 PM	58.5	

Notes:
- *Reading time signifies the start of monitoring the entire heat extraction system*
- *See "Notes on Heat Extraction System Readings" for comments on reading events*

Date	Time	Temperature (deg F)	Notes
Thermocouple: GIW-07 @ 115'			
11/20/2014	6:00 AM	69.1	
11/20/2014	9:25 AM	69.8	
11/20/2014	1:00 PM	76.4	
11/20/2014	4:50 PM	63.0	
11/21/2014	6:10 AM	79.3	
11/21/2014	9:00 AM	74.5	
11/21/2014	2:40 PM	61.0	
11/22/2014		80.3	
11/24/2014	10:40 AM	84.1	
11/24/2014	1:20 PM	71.0	
11/25/2014	5:00 AM	77.2	
11/25/2014	9:00 AM	71.4	
11/25/2014	1:00 PM	62.2	
11/25/2014	4:30 PM	60.1	
11/26/2014	4:50 AM	74.0	
11/26/2014	9:00 AM	67.5	
11/26/2014	1:00 PM	60.7	
11/27/2014	5:00 AM	53.2	
11/27/2014	9:00 AM	51.5	
11/27/2014	1:00 PM	52.1	
11/28/2014	5:00 AM	51.6	
11/28/2014	9:00 AM	50.6	
11/29/2014	9:00 AM	57.7	
11/29/2014	4:50 PM	65.0	
11/30/2014	8:50 AM	66.6	
11/30/2014	12:50 PM	70.0	
12/1/2014	5:20 AM	65.2	
12/1/2014	9:00 AM	64.3	
12/1/2014	12:50 PM	64.0	
12/1/2014	5:00 PM	56.0	
12/2/2014	5:10 AM	68.3	
12/2/2014	9:15 AM	64.0	
12/2/2014	1:15 PM	57.8	
12/2/2014	4:50 PM	55.3	
12/3/2014	5:05 AM	53.7	
12/3/2014	9:00 AM	51.6	
12/3/2014	12:45 PM	61.3	
12/3/2014	5:00 PM	61.3	

Notes:
- *Reading time signifies the start of monitoring the entire heat extraction system*
- *See "Notes on Heat Extraction System Readings" for comments on reading events*

Date	Time	Temperature (deg F)	Notes
Thermocouple: GIW-07 @ 115'			
12/4/2014	9:00 AM	56.2	
12/4/2014	1:10 PM	53.5	
12/4/2014	5:00 PM	54.2	
12/5/2014	5:05 AM	55.3	
12/5/2014	9:00 AM	55.6	
12/6/2014		60.5	
12/8/2014	5:00 AM	54.2	
12/8/2014	9:00 AM	56.4	
12/8/2014	1:30 PM	56.6	
12/8/2014	5:00 PM	57.8	
12/9/2014	5:00 AM	54.2	
12/9/2014	9:00 AM	51.5	
12/9/2014	1:15 PM	52.6	
12/9/2014	5:25 PM	52.6	
12/10/2014	4:30 AM	53.2	
12/10/2014	5:30 AM	52.1	
12/10/2014	9:15 AM	52.2	
12/10/2014	1:15 PM	52.0	
12/10/2014	4:30 PM	53.2	
12/11/2014	5:00 AM	50.9	
12/11/2014	9:00 AM	51.4	
12/11/2014	1:00 PM	52.8	
12/11/2014	5:00 PM	53.8	
12/12/2014	5:00 AM	50.6	
12/12/2014	9:00 AM	53.1	
12/12/2014	1:00 PM	56.7	
12/12/2014	5:20 PM	57.6	
12/13/2014	9:00 AM	54.0	
12/14/2014	1:00 PM	64.3	
12/15/2014	5:00 AM	63.1	
12/15/2014	9:00 AM	63.4	
12/15/2014	1:00 PM	62.7	
12/15/2014	4:50 PM	62.8	
12/16/2014	4:50 AM	58.8	
12/16/2014	9:05 AM	57.0	
12/16/2014	1:30 PM	56.2	
12/16/2014	4:35 PM	55.4	
12/17/2014	8:15 AM	49.8	

Notes:
- *Reading time signifies the start of monitoring the entire heat extraction system*
- *See "Notes on Heat Extraction System Readings" for comments on reading events*

Date	Time	Temperature (deg F)	Notes
Thermocouple: GIW-07 @ 115'			
12/17/2014	1:30 PM	52.1	
12/17/2014	5:00 PM	50.9	
12/18/2014	5:20 AM	51.1	
12/18/2014	9:30 AM	49.0	
12/18/2014	1:10 PM	52.1	
12/18/2014	5:00 PM	51.5	
12/19/2014	5:00 AM	50.6	
12/19/2014	8:55 AM	49.7	
12/19/2014	12:55 PM	52.0	
12/19/2014	5:00 PM	50.5	
12/20/2014	2:50 PM	53.5	
12/22/2014	5:10 AM	54.6	
12/22/2014	9:00 AM	54.6	
12/22/2014	1:00 PM	58.8	
12/22/2014	4:50 PM	59.0	
12/23/2014	5:15 AM	58.9	
12/23/2014	9:05 AM	57.9	
12/23/2014	1:00 PM	58.3	
12/24/2014	9:20 AM	56.5	
12/24/2014	12:20 PM	56.6	
12/24/2014	3:20 PM	54.9	
12/26/2014	9:00 AM	56.5	
12/26/2014	2:00 PM	61.9	
12/29/2014	5:40 AM	55.3	
12/29/2014	9:00 AM	48.9	
12/29/2014	1:00 PM	53.3	
12/30/2014	5:15 AM	48.2	
12/31/2014	5:25 AM	46.4	
12/31/2014	9:00 AM		
208 readings		Average: 71.6	

Thermocouple: GIW-07 @ 50'

10/8/2014		215.2	
10/10/2014	2:00 PM	192.4	
10/11/2014	2:56 PM	203.0	
10/12/2014	2:35 PM	206.6	
10/13/2014	3:25 PM	174.7	
10/14/2014	2:40 PM	180.4	

Notes:
- *Reading time signifies the start of monitoring the entire heat extraction system*
- *See "Notes on Heat Extraction System Readings" for comments on reading events*

Date	Time	Temperature (deg F)	Notes

Thermocouple: GIW-07 @ 50'

10/14/2014	5:45 PM	145.1	
10/15/2014	8:20 AM	148.0	
10/15/2014	1:25 PM	121.5	
10/16/2014	2:25 PM	91.2	
10/17/2014	1:05 PM	90.2	
10/18/2014	2:40 PM	86.9	
10/19/2014	8:04 AM	97.2	
10/19/2014	12:20 PM	106.7	
10/20/2014	2:35 PM	133.9	
10/21/2014	10:30 AM	133.9	
10/22/2014	9:30 AM	157.5	
10/23/2014	4:50 PM	167.4	
10/24/2014	11:05 AM	135.5	
10/24/2014	1:00 PM	124.5	
10/24/2014	4:50 PM	118.1	
10/25/2014	9:01 AM	87.8	
10/25/2014	1:00 PM	102.5	
10/25/2014	5:25 PM	110.5	
10/26/2014	9:20 AM	103.2	
10/26/2014	1:15 PM	123.3	
10/26/2014	5:15 PM	121.5	
10/27/2014	9:00 AM	135.5	
10/27/2014	1:00 PM	113.0	
10/27/2014	5:10 PM	102.6	
10/28/2014	9:00 AM	85.6	
10/28/2014	1:00 PM	83.0	
10/28/2014	4:45 PM	79.4	
10/29/2014	7:00 AM	74.0	
10/29/2014	10:10 AM	73.3	
10/29/2014	1:10 PM	73.6	
10/29/2014	4:45 PM	71.8	
10/30/2014	7:00 AM	69.6	
10/30/2014	9:00 AM	70.7	
10/30/2014	1:00 PM	70.2	
10/30/2014	4:30 PM	72.1	
10/31/2014	5:00 AM	69.4	
10/31/2014	9:00 AM	69.0	
10/31/2014	1:00 PM	68.7	

Notes:
- *Reading time signifies the start of monitoring the entire heat extraction system*
- *See "Notes on Heat Extraction System Readings" for comments on reading events*

Date	Time	Temperature (deg F)	Notes

Thermocouple: GIW-07 @ 50'

10/31/2014	4:30 PM	68.5	
11/1/2014	5:15 AM	62.1	
11/1/2014	4:50 PM	64.4	
11/2/2014	4:45 AM	76.9	
11/2/2014	9:15 AM	79.1	
11/3/2014	5:00 AM	85.4	
11/3/2014	9:00 AM	77.6	
11/3/2014	1:00 PM	78.0	
11/3/2014	4:45 PM	76.7	
11/4/2014	5:00 AM	73.2	
11/4/2014	9:20 AM	73.9	
11/4/2014	1:00 PM	73.5	
11/4/2014	4:30 PM	78.1	
11/5/2014	5:05 AM	68.2	
11/5/2014	9:10 AM	68.6	
11/5/2014	12:50 PM	70.2	
11/5/2014	4:30 PM	69.5	
11/6/2014	9:10 AM	67.5	
11/6/2014	1:05 PM	67.8	
11/6/2014	4:40 PM	65.9	
11/7/2014	9:10 AM	63.2	
11/7/2014	1:10 PM	65.4	
11/8/2014	6:30 AM	67.9	
11/8/2014	12:30 PM	69.7	
11/9/2014	7:42 AM	61.2	
11/10/2014	5:00 AM	64.2	
11/10/2014	9:00 AM	65.3	
11/10/2014	12:50 PM	71.4	
11/11/2014	5:00 AM	69.6	
11/11/2014	9:15 AM	70.3	
11/11/2014	1:15 PM	65.5	
11/11/2014	4:45 PM	65.7	
11/12/2014	5:00 AM	61.6	
11/12/2014	9:00 AM	61.7	
11/12/2014	1:30 PM	63.2	
11/12/2014	4:45 PM	64.6	
11/13/2014	4:50 AM	70.7	
11/13/2014	9:28 AM	71.4	

Notes:
- *Reading time signifies the start of monitoring the entire heat extraction system*
- *See "Notes on Heat Extraction System Readings" for comments on reading events*

Date	Time	Temperature (deg F)	Notes

Thermocouple: GIW-07 @ 50'

11/13/2014	1:00 PM	68.1	
11/13/2014	4:50 PM	65.0	
11/14/2014	5:10 AM	71.8	
11/14/2014	9:10 AM	75.0	
11/14/2014	1:00 PM	65.6	
11/15/2014	8:50 AM	76.0	
11/15/2014	5:15 PM	63.6	
11/16/2014	5:00 AM	73.1	
11/16/2014	9:00 AM	74.1	
11/17/2014	4:50 AM	59.1	
11/17/2014	9:15 AM	58.8	
11/17/2014	1:20 PM	58.3	
11/17/2014	4:30 PM	58.8	
11/18/2014	5:00 AM	65.7	
11/18/2014	9:10 AM	66.5	
11/18/2014	1:00 PM	64.8	
11/18/2014	4:40 PM	62.0	
11/19/2014	5:00 AM	68.6	
11/19/2014	9:00 AM	70.6	
11/19/2014	1:15 PM	66.7	
11/19/2014	4:45 PM	64.1	
11/20/2014	6:00 AM	71.2	
11/20/2014	9:25 AM	72.1	
11/20/2014	1:00 PM	76.1	
11/20/2014	4:50 PM	69.2	
11/21/2014	6:10 AM	78.9	
11/21/2014	9:00 AM	77.0	
11/21/2014	2:40 PM	68.0	
11/22/2014		80.1	
11/24/2014	10:40 AM	86.0	
11/24/2014	1:20 PM	78.0	
11/25/2014	5:00 AM	80.3	
11/25/2014	9:00 AM	76.3	
11/25/2014	1:00 PM	69.2	
11/25/2014	4:30 PM	67.4	
11/26/2014	4:50 AM	76.2	
11/26/2014	9:00 AM	73.1	
11/26/2014	1:00 PM	68.3	

Notes:
- *Reading time signifies the start of monitoring the entire heat extraction system*
- *See "Notes on Heat Extraction System Readings" for comments on reading events*

Date	Time	Temperature (deg F)	Notes

Thermocouple: GIW-07 @ 50'

11/27/2014	5:00 AM	60.5	
11/27/2014	9:00 AM	58.0	
11/27/2014	1:00 PM	57.8	
11/28/2014	5:00 AM	57.4	
11/28/2014	9:00 AM	56.2	
11/29/2014	9:00 AM	61.4	
11/29/2014	4:50 PM	66.3	
11/30/2014	8:50 AM	69.6	
11/30/2014	12:50 PM	71.4	
12/1/2014	5:20 AM	70.8	
12/1/2014	9:00 AM	68.0	
12/1/2014	12:50 PM	68.8	
12/1/2014	5:00 PM	64.3	
12/2/2014	5:10 AM	70.9	
12/2/2014	9:15 AM	68.7	
12/2/2014	1:15 PM	65.5	
12/2/2014	4:50 PM	62.6	
12/3/2014	5:05 AM	59.9	
12/3/2014	9:00 AM	57.8	
12/3/2014	12:45 PM	58.9	
12/3/2014	5:00 PM	58.9	
12/4/2014	9:00 AM	64.1	
12/4/2014	1:10 PM	58.5	
12/4/2014	5:00 PM	59.3	
12/5/2014	5:05 AM	59.0	
12/5/2014	9:00 AM	59.7	
12/6/2014		66.0	
12/8/2014	5:00 AM	58.6	
12/8/2014	9:00 AM	52.9	
12/8/2014	1:30 PM	60.5	
12/8/2014	5:00 PM	61.9	
12/9/2014	5:00 AM	59.8	
12/9/2014	9:00 AM	57.2	
12/9/2014	1:15 PM	58.2	
12/9/2014	5:25 PM	57.7	
12/10/2014	4:30 AM	58.3	
12/10/2014	5:30 AM	57.7	
12/10/2014	9:15 AM	57.3	

Notes:
- *Reading time signifies the start of monitoring the entire heat extraction system*
- *See "Notes on Heat Extraction System Readings" for comments on reading events*

Date	Time	Temperature (deg F)	Notes

Thermocouple: GIW-07 @ 50'

12/10/2014	1:15 PM	56.9	
12/10/2014	4:30 PM	58.3	
12/11/2014	5:00 AM	55.9	
12/11/2014	9:00 AM	57.0	
12/11/2014	1:00 PM	56.1	
12/11/2014	5:00 PM	58.3	
12/12/2014	5:00 AM	55.3	
12/12/2014	9:00 AM	58.0	
12/12/2014	1:00 PM	58.8	
12/12/2014	5:20 PM	60.6	
12/13/2014	9:00 AM	57.8	
12/14/2014	1:00 PM	65.5	
12/15/2014	5:00 AM	66.1	
12/15/2014	9:00 AM	67.3	
12/15/2014	1:00 PM	65.8	
12/15/2014	4:50 PM	65.3	
12/16/2014	4:50 AM	62.9	
12/16/2014	9:05 AM	62.0	
12/16/2014	1:30 PM	61.7	
12/16/2014	4:35 PM	60.7	
12/17/2014	8:15 AM	55.4	
12/17/2014	1:30 PM	56.8	
12/17/2014	5:00 PM	55.3	
12/18/2014	5:20 AM	56.9	
12/18/2014	9:30 AM	53.5	
12/18/2014	1:10 PM	57.2	
12/18/2014	5:00 PM	55.5	
12/19/2014	5:00 AM	55.2	
12/19/2014	8:55 AM	54.2	
12/19/2014	12:55 PM	56.0	
12/19/2014	5:00 PM	54.2	
12/20/2014	2:50 PM	56.3	
12/22/2014	5:10 AM	58.4	
12/22/2014	9:00 AM	58.1	
12/22/2014	1:00 PM	61.3	
12/22/2014	4:50 PM	61.5	
12/23/2014	5:15 AM	62.0	
12/23/2014	9:05 AM	61.4	

Notes:
- *Reading time signifies the start of monitoring the entire heat extraction system*
- *See "Notes on Heat Extraction System Readings" for comments on reading events*

Date	Time	Temperature (deg F)	Notes

Thermocouple: GIW-07 @ 50'

12/23/2014	1:00 PM	61.2	
12/24/2014	9:20 AM	61.4	
12/24/2014	12:20 PM	61.0	
12/24/2014	3:20 PM	59.2	
12/26/2014	9:00 AM	60.7	
12/26/2014	2:00 PM	63.1	
12/29/2014	5:40 AM	55.8	
12/29/2014	9:00 AM	53.9	
12/29/2014	1:00 PM	56.9	
12/30/2014	5:15 AM	53.3	
12/30/2014	9:00 AM	53.9	
12/30/2014	1:00 PM	56.2	
12/31/2014	5:25 AM	51.7	
12/31/2014	9:00 AM	54.2	
12/31/2014	1:00 PM	57.3	
211 readings		Average: 74.9	

Thermocouple: GIW-10 @ 115'

10/8/2014		220.6	
10/10/2014	2:00 PM	210.5	
10/11/2014	2:56 PM	217.5	
10/12/2014	2:35 PM	218.4	
10/13/2014	3:25 PM	206.2	
10/14/2014	2:40 PM	166.2	
10/14/2014	5:45 PM	156.9	
10/15/2014	8:20 AM	147.7	
10/15/2014	1:25 PM	118.9	
10/16/2014	2:25 PM	88.4	
10/17/2014	1:05 PM	93.3	
10/18/2014	2:40 PM	89.0	
10/19/2014	8:04 AM	100.7	
10/19/2014	12:20 PM	112.7	
10/20/2014	2:35 PM	149.1	
10/21/2014	10:30 AM	149.1	
10/22/2014	9:30 AM	180.2	
10/23/2014	4:50 PM	193.4	
10/24/2014	11:05 AM	139.5	
10/24/2014	1:00 PM	126.2	

Notes:
- *Reading time signifies the start of monitoring the entire heat extraction system*
- *See "Notes on Heat Extraction System Readings" for comments on reading events*

Date	Time	Temperature (deg F)	Notes
Thermocouple: GIW-10 @ 115'			
10/24/2014	4:50 PM	119.3	
10/25/2014	9:01 AM	105.3	
10/25/2014	1:00 PM	110.5	
10/25/2014	5:25 PM	121.2	
10/26/2014	9:20 AM	129.7	
10/26/2014	1:15 PM	141.6	
10/26/2014	5:15 PM	144.3	
10/27/2014	9:00 AM	160.6	
10/27/2014	1:00 PM	124.4	
10/27/2014	5:10 PM	106.3	
10/28/2014	9:00 AM	84.2	
10/28/2014	1:00 PM	80.4	
10/28/2014	4:45 PM	77.6	
10/29/2014	7:00 AM	70.7	
10/29/2014	10:10 AM	71.1	
10/29/2014	1:10 PM	71.6	
10/29/2014	4:45 PM	71.6	
10/30/2014	7:00 AM	67.4	
10/30/2014	9:00 AM	68.2	
10/30/2014	1:00 PM	68.8	
10/30/2014	4:30 PM	70.8	
10/31/2014	5:00 AM	68.3	
10/31/2014	9:00 AM	66.4	
10/31/2014	1:00 PM	74.5	
10/31/2014	4:30 PM	66.6	
11/1/2014	5:15 AM	59.2	
11/1/2014	4:50 PM	63.2	
11/2/2014	4:45 AM	79.2	
11/2/2014	9:15 AM	81.4	
11/3/2014	5:00 AM	88.5	
11/3/2014	9:00 AM	77.6	
11/3/2014	1:00 PM	78.0	
11/3/2014	4:45 PM	76.8	
11/4/2014	5:00 AM	73.6	
11/4/2014	9:20 AM	73.4	
11/4/2014	1:00 PM	73.3	
11/4/2014	4:30 PM	76.8	
11/5/2014	5:05 AM	66.4	

Notes:
- *Reading time signifies the start of monitoring the entire heat extraction system*
- *See "Notes on Heat Extraction System Readings" for comments on reading events*

Date	Time	Temperature (deg F)	Notes
Thermocouple: GIW-10 @ 115'			
11/5/2014	9:10 AM	66.5	
11/5/2014	12:50 PM	69.7	
11/5/2014	4:30 PM	69.3	
11/6/2014	9:10 AM	66.0	
11/6/2014	1:05 PM	66.0	
11/6/2014	4:40 PM	64.8	
11/7/2014	9:10 AM	61.6	
11/7/2014	1:10 PM	65.3	
11/8/2014	6:30 AM	60.3	
11/8/2014	12:30 PM	67.5	
11/9/2014	7:42 AM	61.2	
11/10/2014	5:00 AM	65.8	
11/10/2014	9:00 AM	66.2	
11/10/2014	12:50 PM	70.0	
11/11/2014	5:00 AM	68.9	
11/11/2014	9:15 AM	68.0	
11/11/2014	1:15 PM	63.6	
11/11/2014	4:45 PM	65.0	
11/12/2014	5:00 AM	57.3	
11/12/2014	9:00 AM	58.4	
11/12/2014	1:30 PM	61.6	
11/12/2014	4:45 PM	63.5	
11/13/2014	4:50 AM	70.8	
11/13/2014	9:28 AM	74.1	
11/13/2014	1:00 PM	66.8	
11/13/2014	4:50 PM	62.3	
11/14/2014	5:10 AM	72.4	
11/14/2014	9:10 AM	75.3	
11/14/2014	1:00 PM	66.2	
11/15/2014	8:50 AM	76.4	
11/15/2014	5:15 PM	60.4	
11/16/2014	5:00 AM	73.9	
11/16/2014	9:00 AM	75.3	
11/17/2014	4:50 AM	55.7	
11/17/2014	9:15 AM	56.8	
11/17/2014	1:20 PM	56.0	
11/17/2014	4:30 PM	55.3	
11/18/2014	5:00 AM	63.7	

Notes:
- *Reading time signifies the start of monitoring the entire heat extraction system*
- *See "Notes on Heat Extraction System Readings" for comments on reading events*

Date	Time	Temperature (deg F)	Notes
Thermocouple: GIW-10 @ 115'			
11/18/2014	9:10 AM	65.7	
11/18/2014	1:00 PM	62.1	
11/18/2014	4:40 PM	58.3	
11/19/2014	5:00 AM	68.1	
11/19/2014	9:00 AM	72.0	
11/19/2014	1:15 PM	65.8	
11/19/2014	4:45 PM	61.5	
11/20/2014	6:00 AM	71.5	
11/20/2014	9:25 AM	73.4	
11/20/2014	1:00 PM	78.1	
11/20/2014	4:50 PM	66.4	
11/21/2014	6:10 AM	77.1	
11/21/2014	9:00 AM	76.2	
11/21/2014	2:40 PM	64.9	
11/22/2014		82.0	
11/24/2014	10:40 AM	87.5	
11/24/2014	1:20 PM	75.3	
11/25/2014	5:00 AM	79.0	
11/25/2014	9:00 AM	74.6	
11/25/2014	1:00 PM	65.7	
11/25/2014	4:30 PM	63.0	
11/26/2014	4:50 AM	76.4	
11/26/2014	9:00 AM	70.6	
11/26/2014	1:00 PM	64.2	
11/27/2014	5:00 AM	55.5	
11/27/2014	9:00 AM	53.9	
11/27/2014	1:00 PM	55.3	
11/28/2014	5:00 AM	53.5	
11/28/2014	9:00 AM	52.8	
11/29/2014	9:00 AM	60.4	
11/29/2014	4:50 PM	67.7	
11/30/2014	8:50 AM	69.7	
11/30/2014	12:50 PM	73.2	
12/1/2014	5:20 AM	74.4	
12/1/2014	9:00 AM	73.2	
12/1/2014	12:50 PM	69.5	
12/1/2014	5:00 PM	59.3	
12/2/2014	5:10 AM	75.2	

Notes:
- *Reading time signifies the start of monitoring the entire heat extraction system*
- *See "Notes on Heat Extraction System Readings" for comments on reading events*

Date	Time	Temperature (deg F)	Notes
Thermocouple: GIW-10 @ 115'			
12/2/2014	9:15 AM	73.6	
12/2/2014	1:15 PM	69.9	
12/2/2014	4:50 PM	66.9	
12/3/2014	5:05 AM	63.1	
12/3/2014	9:00 AM	60.9	
12/3/2014	12:45 PM	45.7	
12/3/2014	5:00 PM	45.7	
12/4/2014	9:00 AM	64.8	
12/4/2014	1:10 PM	62.1	
12/4/2014	5:00 PM	62.2	
12/5/2014	5:05 AM	63.2	
12/5/2014	9:00 AM	63.5	
12/6/2014		68.9	
12/8/2014	5:00 AM	63.5	
12/8/2014	9:00 AM	64.6	
12/8/2014	1:30 PM	63.8	
12/8/2014	5:00 PM	64.7	
12/9/2014	5:00 AM	63.1	
12/9/2014	9:00 AM	61.4	
12/9/2014	1:15 PM	61.7	
12/9/2014	5:25 PM	61.0	
12/10/2014	4:30 AM	63.9	
12/10/2014	5:30 AM	60.8	
12/10/2014	9:15 AM	61.4	
12/10/2014	1:15 PM	60.7	
12/10/2014	4:30 PM	63.9	
12/11/2014	5:00 AM	58.2	
12/11/2014	9:00 AM	59.9	
12/11/2014	1:00 PM	56.9	
12/11/2014	5:00 PM	60.1	
12/12/2014	5:00 AM	57.8	
12/12/2014	9:00 AM	60.4	
12/12/2014	1:00 PM	62.1	
12/12/2014	5:20 PM	63.1	
12/13/2014	9:00 AM	62.4	
12/14/2014	1:00 PM	69.9	
12/15/2014	5:00 AM	70.3	
12/15/2014	9:00 AM	71.0	

Notes:
- *Reading time signifies the start of monitoring the entire heat extraction system*
- *See "Notes on Heat Extraction System Readings" for comments on reading events*

Date	Time	Temperature (deg F)	Notes
Thermocouple: GIW-10 @ 115'			
12/15/2014	1:00 PM	69.4	
12/15/2014	4:50 PM	69.5	
12/16/2014	4:50 AM	66.4	
12/16/2014	9:05 AM	65.3	
12/16/2014	1:30 PM	64.7	
12/16/2014	4:35 PM	63.1	
12/17/2014	8:15 AM	57.2	
12/17/2014	1:30 PM	61.7	
12/17/2014	5:00 PM	58.9	
12/18/2014	5:20 AM	60.9	
12/18/2014	9:30 AM	57.0	
12/18/2014	1:10 PM	58.6	
12/18/2014	5:00 PM	58.3	
12/19/2014	5:00 AM	57.3	
12/19/2014	8:55 AM	57.2	
12/19/2014	12:55 PM	58.1	
12/19/2014	5:00 PM	57.4	
12/20/2014	2:50 PM	59.1	
12/22/2014	5:10 AM	61.3	
12/22/2014	9:00 AM	61.0	
12/22/2014	1:00 PM	63.4	
12/22/2014	4:50 PM	63.4	
12/23/2014	5:15 AM	66.0	
12/23/2014	9:05 AM	64.9	
12/23/2014	1:00 PM	65.1	
12/24/2014	9:20 AM	65.5	
12/24/2014	12:20 PM	63.2	
12/24/2014	3:20 PM	62.3	
12/26/2014	9:00 AM	62.3	
12/26/2014	2:00 PM	61.3	
12/29/2014	9:00 AM	55.2	
12/29/2014	1:00 PM	58.2	
12/30/2014	5:15 AM	55.6	
12/30/2014	9:00 AM	56.6	
12/30/2014	1:00 PM	57.4	
12/31/2014	5:25 AM	54.5	
12/31/2014	9:00 AM	56.7	
12/31/2014	1:00 PM	48.4	

Notes:
- *Reading time signifies the start of monitoring the entire heat extraction system*
- *See "Notes on Heat Extraction System Readings" for comments on reading events*

Date	Time	Temperature (deg F)	Notes
Thermocouple:	**GIW-10 @ 115'**		
210 readings		Average: 76.9	

Thermocouple: GIW-10 @ 50'

10/8/2014		211.9	
10/10/2014	2:00 PM	196.7	
10/11/2014	2:56 PM	207.8	
10/12/2014	2:35 PM	209.1	
10/13/2014	3:25 PM	190.4	
10/14/2014	2:40 PM	184.1	
10/14/2014	5:45 PM	169.5	
10/15/2014	8:20 AM	171.7	
10/15/2014	1:25 PM	140.0	
10/16/2014	2:25 PM	98.4	
10/17/2014	1:05 PM	100.9	
10/18/2014	2:40 PM	96.7	
10/19/2014	8:04 AM	106.0	
10/19/2014	12:20 PM	114.9	
10/20/2014	2:35 PM	148.6	
10/21/2014	10:30 AM	148.6	
10/22/2014	9:30 AM	179.6	
10/23/2014	4:50 PM	192.4	
10/24/2014	11:05 AM	166.8	
10/24/2014	1:00 PM	147.9	
10/24/2014	4:50 PM	131.8	
10/25/2014	9:01 AM	112.0	
10/25/2014	1:00 PM	113.6	
10/25/2014	5:25 PM	118.4	
10/26/2014	9:20 AM	128.6	
10/26/2014	1:15 PM	142.2	
10/26/2014	5:15 PM	143.7	
10/27/2014	9:00 AM	159.5	
10/27/2014	1:00 PM	141.4	
10/27/2014	5:10 PM	122.6	
10/28/2014	9:00 AM	95.4	
10/28/2014	1:00 PM	91.4	
10/28/2014	4:45 PM	87.8	
10/29/2014	7:00 AM	81.3	
10/29/2014	10:10 AM	81.5	

Notes:
- *Reading time signifies the start of monitoring the entire heat extraction system*
- *See "Notes on Heat Extraction System Readings" for comments on reading events*

Date	Time	Temperature (deg F)	Notes

Thermocouple: GIW-10 @ 50'

10/29/2014	1:10 PM	80.4	
10/29/2014	4:45 PM	78.9	
10/30/2014	7:00 AM	76.6	
10/30/2014	9:00 AM	77.4	
10/30/2014	1:00 PM	76.1	
10/30/2014	4:30 PM	77.5	
10/31/2014	5:00 AM	75.8	
10/31/2014	9:00 AM	74.8	
10/31/2014	1:00 PM	74.6	
10/31/2014	4:30 PM	74.1	
11/1/2014	5:15 AM	68.6	
11/1/2014	4:50 PM	69.5	
11/2/2014	4:45 AM	82.2	
11/2/2014	9:15 AM	84.7	
11/3/2014	5:00 AM	92.5	
11/3/2014	9:00 AM	87.0	
11/3/2014	1:00 PM	85.0	
11/3/2014	4:45 PM	84.1	
11/4/2014	5:00 AM	81.0	
11/4/2014	9:20 AM	81.3	
11/4/2014	1:00 PM	80.1	
11/4/2014	4:30 PM	84.7	
11/5/2014	5:05 AM	75.1	
11/5/2014	9:10 AM	75.0	
11/5/2014	12:50 PM	75.4	
11/5/2014	4:30 PM	75.8	
11/6/2014	9:10 AM	74.1	
11/6/2014	1:05 PM	74.0	
11/6/2014	4:40 PM	72.4	
11/7/2014	9:10 AM	68.8	
11/7/2014	1:10 PM	72.1	
11/8/2014	6:30 AM	73.4	
11/8/2014	12:30 PM	73.3	
11/9/2014	7:42 AM	64.9	
11/10/2014	5:00 AM	70.5	
11/10/2014	9:00 AM	70.5	
11/10/2014	12:50 PM	75.7	
11/11/2014	5:00 AM	76.1	

Notes:
- *Reading time signifies the start of monitoring the entire heat extraction system*
- *See "Notes on Heat Extraction System Readings" for comments on reading events*

Date	Time	Temperature (deg F)	Notes
Thermocouple: GIW-10 @ 50'			
11/11/2014	9:15 AM	77.3	
11/11/2014	1:15 PM	73.3	
11/11/2014	4:45 PM	74.4	
11/12/2014	5:00 AM	66.9	
11/12/2014	9:00 AM	67.7	
11/12/2014	1:30 PM	69.7	
11/12/2014	4:45 PM	69.5	
11/13/2014	4:50 AM	75.5	
11/13/2014	9:28 AM	78.2	
11/13/2014	1:00 PM	75.8	
11/13/2014	4:50 PM	72.0	
11/14/2014	5:10 AM	76.2	
11/14/2014	9:10 AM	78.5	
11/14/2014	1:00 PM	74.4	
11/15/2014	8:50 AM	80.4	
11/15/2014	5:15 PM	70.7	
11/16/2014	5:00 AM	77.5	
11/16/2014	9:00 AM	78.9	
11/17/2014	4:50 AM	65.1	
11/17/2014	9:15 AM	65.6	
11/17/2014	1:20 PM	63.8	
11/17/2014	4:30 PM	65.2	
11/18/2014	5:00 AM	69.6	
11/18/2014	9:10 AM	71.4	
11/18/2014	1:00 PM	70.3	
11/18/2014	4:40 PM	66.7	
11/19/2014	5:00 AM	72.4	
11/19/2014	9:00 AM	75.0	
11/19/2014	1:15 PM	72.9	
11/19/2014	4:45 PM	69.8	
11/20/2014	6:00 AM	75.6	
11/20/2014	9:25 AM	77.2	
11/20/2014	1:00 PM	81.3	
11/20/2014	4:50 PM	76.6	
11/21/2014	6:10 AM	83.2	
11/21/2014	9:00 AM	80.8	
11/21/2014	2:40 PM	75.9	
11/22/2014		85.0	

Notes:
- *Reading time signifies the start of monitoring the entire heat extraction system*
- *See "Notes on Heat Extraction System Readings" for comments on reading events*

Date	Time	Temperature (deg F)	Notes
Thermocouple: GIW-10 @ 50'			
11/24/2014	10:40 AM	91.6	
11/24/2014	1:20 PM	86.1	
11/25/2014	5:00 AM	84.0	
11/25/2014	9:00 AM	82.8	
11/25/2014	1:00 PM	76.8	
11/25/2014	4:30 PM	73.1	
11/26/2014	4:50 AM	80.0	
11/26/2014	9:00 AM	78.1	
11/26/2014	1:00 PM	74.0	
11/27/2014	5:00 AM	65.1	
11/27/2014	9:00 AM	63.7	
11/27/2014	1:00 PM	65.0	
11/28/2014	5:00 AM	61.1	
11/28/2014	9:00 AM	60.5	
11/29/2014	9:00 AM	65.5	
11/29/2014	4:50 PM	70.3	
11/30/2014	8:50 AM	74.1	
11/30/2014	12:50 PM	76.0	
12/1/2014	5:20 AM	76.1	
12/1/2014	9:00 AM	75.8	
12/1/2014	12:50 PM	76.3	
12/1/2014	5:00 PM	70.0	
12/2/2014	5:10 AM	72.3	
12/2/2014	9:15 AM	70.5	
12/2/2014	1:15 PM	64.4	
12/2/2014	4:50 PM	60.7	
12/3/2014	5:05 AM	56.8	
12/3/2014	9:00 AM	54.9	
12/3/2014	12:45 PM	50.8	
12/3/2014	5:00 PM	50.8	
12/4/2014	9:00 AM	58.5	
12/4/2014	1:10 PM	55.4	
12/4/2014	5:00 PM	56.1	
12/5/2014	5:05 AM	57.4	
12/5/2014	9:00 AM	52.3	
12/6/2014		62.3	
12/8/2014	5:00 AM	57.9	
12/8/2014	9:00 AM	59.3	

Notes:
- *Reading time signifies the start of monitoring the entire heat extraction system*
- *See "Notes on Heat Extraction System Readings" for comments on reading events*

Date	Time	Temperature (deg F)	Notes

Thermocouple: GIW-10 @ 50'

12/8/2014	1:30 PM	58.7	
12/8/2014	5:00 PM	59.6	
12/9/2014	5:00 AM	57.4	
12/9/2014	9:00 AM	55.0	
12/9/2014	1:15 PM	55.8	
12/9/2014	5:25 PM	55.8	
12/10/2014	4:30 AM	56.1	
12/10/2014	5:30 AM	50.0	
12/10/2014	9:15 AM	55.4	
12/10/2014	1:15 PM	55.3	
12/10/2014	4:30 PM	56.1	
12/11/2014	5:00 AM	52.3	
12/11/2014	9:00 AM	54.0	
12/11/2014	1:00 PM	52.5	
12/11/2014	5:00 PM	55.2	
12/12/2014	5:00 AM	52.4	
12/12/2014	9:00 AM	55.5	
12/12/2014	1:00 PM	56.1	
12/12/2014	5:20 PM	59.0	
12/13/2014	9:00 AM	56.6	
12/14/2014	1:00 PM	65.0	
12/15/2014	5:00 AM	65.1	
12/15/2014	9:00 AM	65.9	
12/15/2014	1:00 PM	64.2	
12/15/2014	4:50 PM	64.3	
12/16/2014	4:50 AM	60.6	
12/16/2014	9:05 AM	59.4	
12/16/2014	1:30 PM	58.4	
12/16/2014	4:35 PM	56.7	
12/17/2014	8:15 AM	50.9	
12/17/2014	1:30 PM	56.0	
12/17/2014	5:00 PM	53.2	
12/18/2014	5:20 AM	53.5	
12/18/2014	9:30 AM	50.7	
12/18/2014	1:10 PM	53.0	
12/18/2014	5:00 PM	53.3	
12/19/2014	5:00 AM	51.5	
12/19/2014	8:55 AM	51.0	

Notes:
- *Reading time signifies the start of monitoring the entire heat extraction system*
- *See "Notes on Heat Extraction System Readings" for comments on reading events*

Date	Time	Temperature (deg F)	Notes
Thermocouple: GIW-10 @ 50'			
12/19/2014	12:55 PM	52.2	
12/19/2014	5:00 PM	51.8	
12/22/2014	5:10 AM	55.9	
12/22/2014	9:00 AM	55.8	
12/22/2014	1:00 PM	59.0	
12/22/2014	4:50 PM	58.8	
12/23/2014	5:15 AM	60.5	
12/23/2014	9:05 AM	59.4	
12/23/2014	1:00 PM	59.4	
12/24/2014	9:20 AM	59.8	
12/24/2014	12:20 PM	57.6	
12/24/2014	3:20 PM	57.1	
12/26/2014	9:00 AM	56.6	
12/26/2014	2:00 PM	62.0	
12/29/2014	9:00 AM	49.1	
12/29/2014	1:00 PM	53.5	
12/30/2014	5:15 AM	49.2	
12/30/2014	9:00 AM	49.8	
12/30/2014	1:00 PM	51.1	
12/31/2014	5:25 AM	48.1	
12/31/2014	9:00 AM	49.4	
12/31/2014	1:00 PM	43.7	
209 readings		Average: 79.2	

Notes:
- *Reading time signifies the start of monitoring the entire heat extraction system*
- *See "Notes on Heat Extraction System Readings" for comments on reading events*

APPENDIX N – TEMPERATURE MONITORING DATA

Neck TMP Readings

Bridgeton Landfill

9/12/2014 to 12/31/2014

TMP 10-5N

Readings		Temperature (deg F) at Depth Below Ground Surface						
Date	Time	20 ft.	40 ft.	60 ft.	80 ft.	100 ft.	120 ft.	140 ft.
9/15/2014		195.2	197.3	221.2	220.5	225.0		
9/19/2014		208.3	211.9	224.6	221.9	232.1		
9/20/2014		205.7	213.8	226.9	220.9	236.2		
9/21/2014	9:00 AM	203.8	208.4	217.1	214.0	225.1		
9/22/2014	3:00 PM	204.5	213.8	221.7	217.9	229.0		
9/23/2014	4:25 PM	201.4	209.1	216.9	211.9	222.5		
9/23/2014	4:35 PM	205.3	212.4	220.9	216.2	227.0		
9/24/2014	12:15 PM	205.6	212.8	221.3	216.5	227.0		
9/25/2014		204.7	212.8	220.4	215.6	225.8		
9/26/2014	2:45 PM	205.4	214.0	221.1	216.2	226.5		
9/27/2014	4:00 PM	205.0	214.0	221.1	216.1	226.3		
9/28/2014	10:30 AM	204.6	213.6	220.6	215.4	225.6		
9/29/2014	3:20 PM	205.4	215.3	221.9	216.8	227.0		
9/30/2014	3:20 PM	204.9	215.2	221.7	216.5	226.6		
10/1/2014	10:00 AM	204.1	214.5	220.7	215.3	225.5		
10/2/2014	3:00 PM	205.4	216.2	222.2	216.7	226.4		
10/3/2014	1:15 PM	207.7	218.4	224.2	218.4	228.6		
10/4/2014	11:30 AM	206.2	217.2	222.9	217.0	227.4		
10/5/2014	8:28 AM	205.4	216.5	222.3	216.5	226.8		
10/6/2014	3:45 PM	205.5	216.7	222.4	216.7	226.9		
10/7/2014		204.4	216.0	221.6	215.8	226.1		
10/8/2014	10:45 AM	207.8	219.1	224.6	218.8	229.3		
10/9/2014	3:30 PM	206.7	217.7	223.3	217.4	228.1		
10/10/2014	2:20 PM	206.9	219.5	225.1	218.7	229.0		
10/11/2014	2:56 PM	201.2	216.2	221.9	214.4	225.0		
10/12/2014	2:35 PM	202.7	216.5	222.0	215.5	226.2		
10/13/2014	3:25 PM	205.5	218.0	223.3	216.9	227.4		
10/14/2014	3:00 PM	202.6	216.7	222.0	215.0	224.9		
10/15/2014	1:40 PM	201.0	215.7	219.7	209.0	215.0		
10/17/2014	1:22 PM	198.0	202.5	198.6	168.7	170.7		
10/20/2014	2:00 PM	186.8	187.7	178.7	150.6	165.3		
10/22/2014	8:45 AM	180.5	190.5	183.5	164.1	182.2		
10/24/2014	4:00 PM	183.2	198.4	195.0	182.8	197.5		

Notes:
- *Only TMP-14R, -19, and -20 have 120' and 140' sensors*
- *See "Notes on Neck TMP Readings" for notes on individual days' readings*

Readings		Temperature (deg F) at Depth Below Ground Surface						
Date	Time	20 ft.	40 ft.	60 ft.	80 ft.	100 ft.	120 ft.	140 ft.

TMP 10-5N

10/27/2014	3:15 PM	181.2	190.8	183.0	161.8	176.8		
10/29/2014	10:50 AM	179.5	185.3	174.9	143.6	150.7		
10/31/2014	1:45 PM	179.0	175.3	159.3	124.3	135.7		
11/3/2014	11:30 AM	176.6	166.6	148.4	117.5	133.2		
11/5/2014	11:15 AM	175.3	164.8	146.7	114.4	128.6		
11/7/2014	10:00 AM	171.5	159.5	141.0	107.0	122.0		
11/10/2014	4:30 PM	164.4	152.4	134.4	102.8	117.6		
11/12/2014	9:50 AM	163.8	152.1	134.1	102.8	117.0		
11/14/2014	1:40 PM	162.2	149.3	131.2	100.7	116.0		
11/17/2014	1:50 PM	159.0	146.7	129.2	99.4	113.1		
11/19/2014	9:50 AM	158.2	145.3	127.2	97.2	111.7		
11/21/2014	9:45 AM	157.1	145.0	126.9	99.2	114.3		
11/24/2014	3:10 PM	155.0	146.8	130.0	106.6	122.5		
11/26/2014	9:38 AM	153.1	145.8	128.7	103.2	116.5		
11/30/2014	10:00 AM	152.4	141.7	122.9	97.3	110.7		
12/1/2014	12:00 PM	153.1	143.1	124.6	100.1	114.3		
12/3/2014	1:15 PM	152.7	141.2	122.9	100.0	111.1		
12/6/2014	9:30 AM	149.5	135.9	118.0	92.6	107.7		
12/8/2014	9:30 AM	148.8	134.2	116.5	91.1	106.0		
12/10/2014	9:25 AM	148.4	133.4	115.9	90.8	105.5		
12/12/2014	9:30 AM	147.5	131.4	113.9	91.4	103.9		
12/15/2014	4:30 PM	147.4	132.0	115.2	92.5	108.1		
12/16/2014	12:05 PM	146.1	131.1	114.5	91.7	107.1		
12/19/2014	4:10 PM	146.1	128.8	112.1	87.4	102.3		
12/22/2014	4:00 PM	145.1	127.0	110.1	86.7	101.8		
12/24/2014	9:40 AM	145.5	128.1	111.3	88.6	103.7		
12/26/2014	10:00 AM	145.0	127.5	110.7	88.0	102.9		
12/29/2014	1:30 PM	145.7	127.8	111.0	88.2	102.5		
12/31/2014	1:40 PM	145.5	125.9	108.6	85.5	99.7		
62								

TMP 10-5S

9/15/2014		154.0	169.4	202.2	231.1	261.1		
9/19/2014		203.5	216.8	230.3	255.3	276.7		
9/20/2014		201.9	216.6	234.8	260.7	283.5		
9/21/2014	9:00 AM	199.9	210.0	227.2	251.9	274.6		

Notes:
- *Only TMP-14R, -19, and -20 have 120' and 140' sensors*
- *See "Notes on Neck TMP Readings" for notes on individual days' readings*

Readings		Temperature (deg F) at Depth Below Ground Surface						
Date	Time	20 ft.	40 ft.	60 ft.	80 ft.	100 ft.	120 ft.	140 ft.
TMP 10-5S								
9/22/2014	3:00 PM	206.7	219.5	237.2	257.9	279.3		
9/23/2014	4:25 PM	204.5	217.8	237.3	259.6	282.2		
9/23/2014	4:35 PM	203.3	217.1	234.7	256.6	278.7		
9/24/2014	12:15 PM	203.0	217.1	235.5	256.3	278.1		
9/25/2014		203.6	218.6	236.9	256.9	278.3		
9/26/2014	2:45 PM	204.2	219.8	238.4	257.6	279.0		
9/27/2014	4:00 PM	204.4	220.8	239.5	258.0	279.4		
9/28/2014	10:30 AM	204.7	221.6	240.8	258.8	280.0		
9/29/2014	3:20 PM	204.7	222.3	241.4	258.7	280.0		
9/30/2014	3:20 PM	205.0	223.1	242.3	259.7	280.4		
10/1/2014	10:00 AM	205.2	223.5	242.7	259.3	280.5		
10/2/2014	3:00 PM	205.4	224.4	243.7	260.1	281.0		
10/3/2014	1:15 PM	206.5	225.7	245.2	261.0	282.0		
10/4/2014	11:30 AM	206.5	226.1	245.4	260.9	281.8		
10/5/2014	8:28 AM	205.6	225.5	245.1	260.3	281.3		
10/6/2014	3:45 PM	205.7	226.3	246.2	261.4	282.2		
10/7/2014		206.5	227.0	246.7	261.6	282.2		
10/8/2014	10:45 AM	207.7	228.8	248.9	263.8	284.7		
10/9/2014	3:30 PM	206.7	227.5	247.6	261.8	282.4		
10/10/2014	2:20 PM	207.1	229.0	248.9	263.1	283.7		
10/11/2014	2:56 PM	204.6	228.0	248.2	262.3	282.8		
10/12/2014	2:35 PM	204.5	228.2	248.3	262.3	282.8		
10/13/2014	3:25 PM	206.0	229.5	249.7	263.5	283.9		
10/14/2014	3:00 PM	204.6	229.3	249.5	263.2	283.6		
10/15/2014	1:40 PM	203.9	229.6	249.5	263.4	283.8		
10/17/2014	1:22 PM	202.1	229.8	250.0	265.1	284.7		
10/20/2014	2:00 PM	200.1	230.6	250.3	264.1	284.5		
10/22/2014	8:45 AM	200.4	230.5	250.8	264.5	284.2		
10/24/2014	4:00 PM	198.5	231.6	251.5	264.7	285.0		
10/27/2014	3:15 PM	194.6	231.2	237.2	264.4	284.8		
10/29/2014	10:50 AM	195.4	232.8	252.5	265.5	286.3		
10/31/2014	1:45 PM	193.3	231.7	251.6	264.7	285.6		
11/3/2014	11:30 AM	191.5	231.4	251.0	263.1	284.7		
11/5/2014	11:15 AM	191.8	233.2	252.8	265.0	286.7		
11/7/2014	10:00 AM	190.0	231.9	251.9	263.4	285.4		
11/10/2014	4:30 PM	182.4	222.2	239.5	248.5	267.7		

Notes:
- Only TMP-14R, -19, and -20 have 120' and 140' sensors
- See "Notes on Neck TMP Readings" for notes on individual days' readings

Readings		Temperature (deg F) at Depth Below Ground Surface						
Date	Time	20 ft.	40 ft.	60 ft.	80 ft.	100 ft.	120 ft.	140 ft.

TMP 10-5S

11/12/2014	9:50 AM	183.6	222.7	239.9	248.6	268.2		
11/14/2014	1:40 PM	181.4	224.0	241.3	251.0	271.5		
11/17/2014	1:50 PM	179.5	223.5	240.2	248.3	269.2		
11/19/2014	9:50 AM	178.1	221.2	241.1	250.1	271.3		
11/21/2014	9:45 AM	177.0	223.1	239.8	247.8	269.4		
11/24/2014	3:10 PM	175.3	233.8	240.9	247.7	269.6		
11/26/2014	9:38 AM	173.5	222.5	238.9	245.1	268.0		
11/30/2014	10:00 AM	171.1	221.4	237.7	243.8	267.4		
12/1/2014	12:00 PM	172.3	222.9	239.7	245.1	269.5		
12/3/2014	1:15 PM	171.5	222.0	239.0	245.3	269.3		
12/6/2014	9:30 AM	171.4	222.1	238.2	242.7	268.2		
12/8/2014	9:30 AM	172.0	222.4	237.9	242.4	268.3		
12/10/2014	9:25 AM	171.3	222.1	237.8	242.0	268.3		
12/12/2014	9:30 AM	171.1	222.3	237.5	241.8	268.5		
12/15/2014	4:30 PM	170.0	221.6	237.2	241.2	268.5		
12/16/2014	12:05 PM	169.4	221.2	236.9	240.7	268.0		
12/19/2014	4:10 PM	170.1	221.5	237.0	240.1	268.3		
12/22/2014	4:00 PM	169.5	220.6	236.1	238.8	267.5		
12/24/2014	9:40 AM	169.9	221.3	237.0	239.2	268.4		
12/26/2014	10:00 AM	168.9	220.1	236.2	240.2	268.8		
12/29/2014	1:30 PM	169.6	220.3	236.0	238.7	268.4		
12/31/2014	1:40 PM	170.6	220.9	236.6	239.0	269.9		
62								

TMP 10-9N

9/15/2014		203.6	213.1	176.0	180.4	223.7		
9/19/2014		207.2	224.3	220.3	205.2	239.3		
9/20/2014		206.4	222.8	222.1	202.5	234.3		
9/21/2014	9:00 AM	215.3	229.6	230.3	209.7	241.8		
9/22/2014	3:00 PM	206.4	223.4	229.1	206.0	237.0		
9/23/2014	4:25 PM	207.7	225.3	230.0	206.7	235.8		
9/23/2014	4:35 PM	206.8	224.9	230.5	208.2	238.2		
9/24/2014	12:15 PM	207.2	225.0	231.8	209.0	239.0		
9/25/2014		206.4	224.3	231.7	208.7	238.1		
9/26/2014	2:45 PM	207.5	225.5	233.7	210.3	239.4		
9/27/2014	4:00 PM	207.6	225.5	234.4	210.8	239.6		

Notes:
- *Only TMP-14R, -19, and -20 have 120' and 140' sensors*
- *See "Notes on Neck TMP Readings" for notes on individual days' readings*

Readings		Temperature (deg F) at Depth Below Ground Surface						
Date	Time	20 ft.	40 ft.	60 ft.	80 ft.	100 ft.	120 ft.	140 ft.

TMP 10-9N

9/28/2014	10:30 AM	206.8	224.3	234.0	210.3	238.5		
9/29/2014	3:20 PM	208.6	226.5	236.6	212.6	240.6		
9/30/2014	3:20 PM	208.3	226.4	236.9	212.7	240.8		
10/1/2014	10:00 AM	207.3	225.1	236.3	211.8	239.7		
10/2/2014	3:00 PM	208.6	226.2	238.2	215.7	241.2		
10/3/2014	1:15 PM	211.0	229.2	240.7	216.0	243.6		
10/4/2014	11:30 AM	208.7	227.1	239.5	214.7	242.3		
10/5/2014	8:28 AM	208.3	226.8	238.8	214.1	241.6		
10/6/2014	3:45 PM	207.9	226.9	239.5	214.9	242.1		
10/7/2014		206.4	226.0	238.7	214.2	241.4		
10/8/2014	10:45 AM	210.6	229.2	242.1	217.5	244.5		
10/9/2014	3:30 PM	209.0	227.8	240.7	216.0	243.0		
10/10/2014	2:20 PM	211.9	230.1	243.0	218.5	245.3		
10/11/2014	2:56 PM	208.5	227.8	240.8	240.8	243.4		
10/12/2014	2:35 PM	208.4	227.7	240.9	216.7	243.5		
10/13/2014	3:25 PM	209.5	229.1	242.2	218.2	244.9		
10/14/2014	3:00 PM	208.1	228.2	241.3	217.4	244.2		
10/15/2014	1:40 PM	208.3	228.5	241.4	217.7	244.4		
10/17/2014	1:22 PM	207.3	228.4	240.9	217.6	244.3		
10/20/2014	2:00 PM	206.6	226.8	239.0	214.9	243.4		
10/22/2014	8:45 AM	206.6	225.9	236.9	211.4	241.8		
10/24/2014	4:00 PM	203.8	224.0	234.0	208.8	240.7		
10/27/2014	3:15 PM	204.0	224.0	232.2	207.2	239.8		
10/29/2014	10:50 AM	204.7	223.6	231.0	206.1	239.4		
10/31/2014	1:45 PM	205.0	223.0	229.3	204.0	238.4		
11/3/2014	11:30 AM	204.1	220.8	225.8	199.5	235.9		
11/5/2014	11:15 AM	205.0	220.0	223.9	196.8	234.6		
11/7/2014	10:00 AM	202.6	216.6	219.4	191.7	230.8		
11/10/2014	4:30 PM	194.9	206.3	207.6	182.4	218.4		
11/12/2014	9:50 AM	196.0	206.1	206.7	181.0	217.8		
11/14/2014	1:40 PM	195.0	204.0	204.1	178.1	215.7		
11/17/2014	1:50 PM	193.9	201.2	200.2	174.1	212.5		
11/19/2014	9:50 AM	193.7	200.4	199.0	173.1	211.9		
11/21/2014	9:45 AM	194.0	199.8	197.7	171.8	210.3		
11/24/2014	3:10 PM	192.1	197.3	194.7	169.3	208.2		
11/26/2014	9:38 AM	191.2	195.6	192.5	167.3	206.3		

Notes:
- Only TMP-14R, -19, and -20 have 120' and 140' sensors
- See "Notes on Neck TMP Readings" for notes on individual days' readings

Readings		Temperature (deg F) at Depth Below Ground Surface						
Date	Time	20 ft.	40 ft.	60 ft.	80 ft.	100 ft.	120 ft.	140 ft.

TMP 10-9N

11/30/2014	10:00 AM	189.5	193.7	189.9	165.7	204.4		
12/1/2014	12:00 PM	193.0	194.2	190.4	165.9	204.9		
12/3/2014	1:15 PM	191.5	193.5	189.7	165.3	204.0		
12/6/2014	9:30 AM	190.7	190.9	186.5	161.9	201.0		
12/8/2014	9:30 AM	190.3	190.1	185.6	160.9	200.1		
12/10/2014	9:25 AM	191.3	189.4	184.8	160.0	199.3		
12/12/2014	9:30 AM	191.2	188.1	183.5	158.6	198.2		
12/15/2014	4:30 PM	190.5	187.4	182.6	157.9	197.5		
12/16/2014	12:05 PM	190.6	185.9	181.0	156.2	196.1		
12/19/2014	4:10 PM	187.1	185.2	179.9	155.3	195.4		
12/22/2014	4:00 PM	188.9	183.3	177.8	153.3	193.7		
12/24/2014	9:40 AM	190.2	183.3	177.5	153.1	193.6		
12/26/2014	10:00 AM	185.3	182.0	175.9	151.8	192.5		
12/29/2014	1:30 PM	184.7	181.3	175.1	151.2	192.2		
12/31/2014	1:40 PM	184.7	181.1	174.6	150.7	191.5		

62

TMP 10-9S

9/15/2014		188.8	198.0	203.2	245.1	261.4		
9/19/2014		200.5	221.0	237.3	261.9	285.2		
9/20/2014		198.5	220.1	235.4	261.2	282.3		
9/21/2014	9:00 AM	195.0	216.1	231.0	253.4	273.0		
9/22/2014	3:00 PM	197.1	220.8	239.2	260.6	281.5		
9/23/2014	4:25 PM	202.0	224.8	243.7	263.1	284.3		
9/23/2014	4:35 PM	199.4	222.6	241.2	261.3	281.6		
9/24/2014	12:15 PM	199.0	222.7	241.8	261.2	281.7		
9/25/2014		199.4	224.0	243.7	262.4	278.8		
9/26/2014	2:45 PM	199.7	224.6	244.6	262.7	272.4		
9/27/2014	4:00 PM	200.1	225.4	245.7	263.2	283.0		
9/28/2014	10:30 AM	200.8	226.2	245.9	263.6	283.2		
9/29/2014	3:20 PM	200.0	226.5	247.0	264.0	289.7		
9/30/2014	3:20 PM	201.0	227.6	248.2	264.7	284.0		
10/1/2014	10:00 AM	200.7	227.6	248.2	264.5	283.6		
10/2/2014	3:00 PM	201.0	228.6	249.3	265.1	284.4		
10/3/2014	1:15 PM	202.0	230.0	250.6	266.4	285.5		
10/4/2014	11:30 AM	201.9	229.9	250.4	265.8	285.1		

Notes:
- *Only TMP-14R, -19, and -20 have 120' and 140' sensors*
- *See "Notes on Neck TMP Readings" for notes on individual days' readings*

Readings		Temperature (deg F) at Depth Below Ground Surface						
Date	Time	20 ft.	40 ft.	60 ft.	80 ft.	100 ft.	120 ft.	140 ft.
TMP 10-9S								
10/5/2014	8:28 AM	201.8	229.6	250.2	265.5	284.7		
10/6/2014	3:45 PM	202.0	231.0	251.5	266.6	285.6		
10/7/2014		201.6	230.8	251.3	266.4	285.0		
10/8/2014	10:45 AM	204.4	233.7	254.2	269.4	288.6		
10/9/2014	3:30 PM	202.3	231.3	251.7	266.6	285.4		
10/10/2014	2:20 PM	203.6	232.8	293.3	268.2	287.5		
10/11/2014	2:56 PM	202.0	231.7	252.2	267.0	285.6		
10/12/2014	2:35 PM	202.2	232.0	252.3	267.2	285.7		
10/13/2014	3:25 PM	203.2	233.1	253.4	268.3	286.5		
10/14/2014	3:00 PM	202.6	233.0	253.2	268.0	286.4		
10/15/2014	1:40 PM	202.7	233.2	253.6	268.9	287.4		
10/17/2014	1:22 PM	203.4	234.3	254.7	271.6	288.4		
10/20/2014	2:00 PM	203.0	234.1	254.1	269.0	287.0		
10/22/2014	8:45 AM	202.0	233.8	254.0	269.7	287.6		
10/24/2014	4:00 PM	202.2	235.0	254.3	269.6	287.9		
10/27/2014	3:15 PM	201.0	234.9	254.4	269.2	287.4		
10/29/2014	10:50 AM	202.0	236.4	255.7	270.1	288.2		
10/31/2014	1:45 PM	201.0	235.9	255.2	269.7	288.3		
11/3/2014	11:30 AM	199.9	235.5	254.4	269.4	287.9		
11/5/2014	11:15 AM	201.0	237.3	256.4	271.0	290.1		
11/7/2014	10:00 AM	199.0	236.0	254.7	269.1	287.8		
11/10/2014	4:30 PM	192.2	226.0	242.1	254.2	269.8		
11/12/2014	9:50 AM	192.4	225.0	242.3	254.2	270.3		
11/14/2014	1:40 PM	194.3	228.1	244.1	255.7	271.5		
11/17/2014	1:50 PM	192.3	226.6	242.3	251.8	270.0		
11/19/2014	9:50 AM	193.2	227.2	243.2	255.9	272.0		
11/21/2014	9:45 AM	191.4	226.6	242.4	254.6	270.8		
11/24/2014	3:10 PM	191.4	227.4	243.2	255.0	271.4		
11/26/2014	9:38 AM	190.0	226.2	242.1	253.6	270.0		
11/30/2014	10:00 AM	188.1	226.0	241.9	253.5	269.9		
12/1/2014	12:00 PM	187.9	227.4	243.5	255.0	271.8		
12/3/2014	1:15 PM	186.7	227.4	243.1	254.4	270.9		
12/6/2014	9:30 AM	185.3	226.3	242.1	253.3	270.1		
12/8/2014	9:30 AM	185.0	226.5	242.4	253.5	270.3		
12/10/2014	9:25 AM	185.2	226.4	242.2	253.3	270.6		
12/12/2014	9:30 AM	184.8	226.5	242.4	252.9	270.2		

Notes:
- Only TMP-14R, -19, and -20 have 120' and 140' sensors
- See "Notes on Neck TMP Readings" for notes on individual days' readings

Readings		Temperature (deg F) at Depth Below Ground Surface						
Date	Time	20 ft.	40 ft.	60 ft.	80 ft.	100 ft.	120 ft.	140 ft.
TMP 10-9S								
12/15/2014	4:30 PM	184.4	226.4	242.4	253.1	270.6		
12/16/2014	12:05 PM	183.9	225.8	241.8	252.2	269.4		
12/19/2014	4:10 PM	183.7	226.4	242.4	252.6	270.3		
12/22/2014	4:00 PM	182.1	225.6	241.7	251.9	269.7		
12/24/2014	9:40 AM	183.3	226.4	242.6	252.7	270.7		
12/26/2014	10:00 AM	183.4	226.0	242.2	252.4	270.4		
12/29/2014	1:30 PM	183.7	226.6	243.1	253.2	271.5		
12/31/2014	1:40 PM	184.2	226.8	243.1	253.0	271.5		
62								
TMP 14R								
9/12/2014		151.6	178.1	163.4	167.3	158.7	161.5	153.0
9/19/2014		167.3	181.7	168.5	166.3	169.3	166.9	164.5
9/20/2014		165.8	184.0	170.8	170.0	169.7	165.7	159.8
9/21/2014	9:00 AM	166.1	180.8	167.5	169.1	170.1	168.8	162.9
9/22/2014	3:00 PM	174.1	174.9	189.6	172.2	174.6	171.2	160.7
9/23/2014	4:25 PM	172.0	188.5	174.8	173.8	173.6	170.3	164.5
9/23/2014	4:35 PM	168.8	185.5	170.9	170.3	169.9	166.9	160.9
9/24/2014	12:15 PM	168.7	185.5	170.8	170.3	170.0	167.0	161.1
9/25/2014		168.4	185.3	170.3	169.6	169.4	166.5	160.7
9/26/2014	2:45 PM	168.4	185.3	170.0	169.3	169.0	165.8	159.7
9/27/2014	4:00 PM	170.6	186.1	170.8	170.1	170.1	166.9	161.0
9/28/2014	10:30 AM	169.8	186.6	171.1	170.4	170.0	166.5	160.5
9/29/2014	3:20 PM	170.1	186.7	171.3	170.8	170.7	167.4	161.5
9/30/2014	3:20 PM	169.9	186.6	171.0	170.4	170.5	167.2	161.2
10/1/2014	10:00 AM	169.6	186.3	170.9	170.3	170.5	167.1	161.0
10/2/2014	3:00 PM	170.4	187.2	171.6	170.9	171.2	167.7	161.3
10/4/2014	11:30 AM	171.9	188.6	172.7	171.8	172.3	168.8	162.9
10/5/2014	8:28 AM	171.1	187.7	171.9	171.0	171.6	168.1	162.1
10/6/2014	3:45 PM	171.5	188.4	172.6	172.0	172.6	169.2	163.4
10/7/2014		170.3	187.4	171.6	171.1	171.8	168.3	162.6
10/8/2014	10:45 AM	172.3	188.7	172.7	172.1	172.7	169.1	163.0
10/9/2014	3:30 PM	172.0	188.8	172.7	171.8	172.5	168.9	163.0
10/10/2014	2:20 PM	174.6	191.1	174.9	174.0	174.6	171.0	165.0
10/11/2014	2:56 PM	172.1	188.7	172.5	171.6	172.4	168.7	162.7
10/12/2014	2:35 PM	172.3	188.9	172.7	171.9	172.7	168.9	163.0

Notes:
- Only TMP-14R, -19, and -20 have 120' and 140' sensors
- See "Notes on Neck TMP Readings" for notes on individual days' readings

Readings		Temperature (deg F) at Depth Below Ground Surface						
Date	Time	20 ft.	40 ft.	60 ft.	80 ft.	100 ft.	120 ft.	140 ft.

TMP 14R

10/13/2014	3:25 PM	174.2	190.9	174.7	173.8	174.6	170.8	164.1
10/14/2014	3:00 PM	173.1	189.3	173.1	172.2	173.0	169.3	163.3
10/15/2014	1:40 PM	173.4	189.7	173.5	172.6	173.5	169.7	163.8
10/17/2014	1:22 PM	174.7	190.3	174.2	173.5	174.4	170.7	165.5
10/20/2014	2:00 PM	176.1	190.1	174.3	173.7	174.6	170.9	164.8
10/22/2014	8:45 AM	176.8	189.3	173.2	172.6	173.5	169.7	164.0
10/24/2014	4:00 PM	178.2	189.8	174.0	173.1	174.0	170.0	163.8
10/27/2014	3:15 PM	179.6	189.4	173.5	172.6	173.5	169.5	163.3
10/29/2014	10:50 AM	181.0	189.9	174.0	173.1	174.1	170.3	164.3
10/31/2014	1:45 PM	182.6	190.7	174.8	173.1	175.0	171.2	165.5
11/3/2014	11:30 AM	182.8	190.5	174.7	173.9	174.9	171.1	165.3
11/5/2014	11:15 AM	184.4	191.5	175.6	174.5	175.5	171.6	165.3
11/7/2014	10:00 AM	184.4	190.6	174.5	173.4	174.4	170.2	164.1
11/10/2014	4:30 PM	180.1	185.6	170.8	169.9	170.9	167.1	161.3
11/12/2014	9:50 AM	181.3	186.3	171.5	170.3	171.4	167.5	161.5
11/14/2014	1:40 PM	182.0	187.0	172.3	171.2	172.3	168.4	162.5
11/17/2014	1:50 PM	182.1	186.7	171.7	170.5	171.7	167.8	162.0
11/19/2014	9:50 AM	182.5	186.9	171.9	170.9	172.1	168.4	163.1
11/21/2014	9:45 AM	183.1	187.3	172.2	171.1	172.2	168.6	163.6
11/24/2014	3:10 PM	184.0	188.5	173.4	172.2	173.3	169.5	163.6
11/26/2014	9:38 AM	184.4	188.3	173.0	171.6	172.7	168.8	162.8
11/30/2014	10:00 AM	181.2	185.7	170.4	169.4	170.4	166.4	160.5
12/1/2014	12:00 PM	185.2	190.0	174.7	173.5	174.6	170.9	165.1
12/3/2014	1:15 PM	183.7	188.8	173.5	172.5	173.6	169.5	163.6
12/6/2014	9:30 AM	182.5	187.6	172.0	170.7	171.7	167.6	161.6
12/8/2014	9:30 AM	183.0	188.1	172.4	171.1	172.0	167.9	161.9
12/10/2014	9:25 AM	182.7	188.1	172.3	171.0	171.9	167.8	161.7
12/12/2014	9:30 AM	182.7	188.3	172.5	171.2	172.0	168.1	162.3
12/15/2014	4:30 PM	184.1	190.0	174.2	172.8	173.6	169.4	163.6
12/16/2014	12:05 PM	182.7	188.7	172.7	171.4	172.1	167.9	161.9
12/19/2014	4:10 PM	184.5	190.8	174.8	173.2	173.9	169.6	163.5
12/22/2014	4:00 PM	182.7	189.4	173.4	171.9	172.6	168.3	162.2
12/24/2014	9:40 AM	182.5	189.4	173.3	171.8	172.5	168.2	162.2
12/26/2014	10:00 AM	181.1	188.4	172.3	170.8	171.6	167.5	161.9
12/29/2014	1:30 PM	183.3	190.7	174.5	172.9	173.7	169.3	163.6
12/31/2014	1:40 PM	183.3	191.1	175.0	173.4	174.1	169.8	163.8

Notes:
- *Only TMP-14R, -19, and -20 have 120' and 140' sensors*
- *See "Notes on Neck TMP Readings" for notes on individual days' readings*

Readings		Temperature (deg F) at Depth Below Ground Surface						
Date	Time	20 ft.	40 ft.	60 ft.	80 ft.	100 ft.	120 ft.	140 ft.

TMP 14R

61

TMP 19

9/12/2014		175.6	178.9	168.7	177.4	202.0	185.0	161.2
9/19/2014		220.9	221.0	222.7	214.4	221.5	224.1	185.2
9/20/2014		212.6	212.3	213.5	209.1	213.9	220.8	180.6
9/21/2014	9:00 AM	218.6	219.1	219.3	210.9	214.4	217.4	179.3
9/22/2014	3:00 PM	214.7	216.8	218.8	210.5	213.5	214.6	173.3
9/23/2014	4:25 PM	217.3	220.2	223.7	213.5	218.0	222.1	181.5
9/23/2014	4:35 PM	214.6	217.6	221.2	210.9	214.9	220.1	180.2
9/24/2014	12:15 PM	215.5	218.9	223.0	212.0	215.4	220.5	180.8
9/25/2014		215.2	219.4	224.7	212.9	216.1	221.2	181.6
9/26/2014	2:45 PM	213.6	219.3	224.8	212.8	215.6	220.7	181.7
9/27/2014	4:00 PM	215.0	220.6	226.5	214.1	216.4	221.2	182.4
9/28/2014	10:30 AM	214.2	220.3	226.1	214.0	216.1	220.9	182.3
9/29/2014	3:20 PM	215.2	221.6	227.7	215.5	217.2	222.1	185.5
9/30/2014	3:20 PM	215.3	221.8	228.1	216.0	105.0	222.3	183.8
10/1/2014	10:00 AM	215.1	221.8	228.1	216.1	79.0	222.3	183.8
10/2/2014	3:00 PM	215.8	222.5	229.0	217.2	80.9	222.9	184.3
10/6/2014	3:45 PM	216.2	223.5	230.1	219.0	77.0	224.0	186.1
10/7/2014		216.7	224.0	230.4	219.3	83.2	223.7	185.6
10/8/2014	10:45 AM	218.6	226.2	232.7	221.9	86.0	226.6	189.3
10/9/2014	3:30 PM	216.4	224.3	230.9	220.0	63.1	224.3	186.9
10/10/2014	2:20 PM	218.4	226.3	233.4	222.3	56.1	226.4	189.9
10/11/2014	2:56 PM	216.5	224.7	232.2	220.5	58.5	224.1	186.9
10/12/2014	2:35 PM	216.4	224.8	233.0	220.9	61.3	224.3	187.6
10/13/2014	3:25 PM	217.9	226.5	235.2	222.7	67.7	255.5	189.1
10/14/2014	3:00 PM	216.5	225.3	234.7	221.8	57.3	224.4	188.7
10/15/2014	1:40 PM	217.0	226.2	236.0	222.6	59.7	225.2	190.0
10/17/2014	1:22 PM	215.7	225.6	236.9	222.6	73.7	224.9	189.8
10/20/2014	2:00 PM	215.0	225.5	238.5	223.0	83.8	224.8	190.4
10/22/2014	8:45 AM	215.6	226.1	239.7	223.3	56.3	224.8	190.6
10/24/2014	4:00 PM	216.0	227.3	242.0	225.0	85.5	226.3	192.0
10/27/2014	3:15 PM	214.5	226.4	242.3	224.4	86.6	226.1	192.3
10/29/2014	10:50 AM	215.6	227.5	244.0	225.5	61.3	227.8	193.5
10/31/2014	1:45 PM	214.8	227.0	244.2	225.2	55.2	228.0	193.2

Notes:
- *Only TMP-14R, -19, and -20 have 120' and 140' sensors*
- *See "Notes on Neck TMP Readings" for notes on individual days' readings*

Readings		Temperature (deg F) at Depth Below Ground Surface						
Date	Time	20 ft.	40 ft.	60 ft.	80 ft.	100 ft.	120 ft.	140 ft.

TMP 19

11/3/2014	11:30 AM	214.9	227.6	245.7	226.2	80.2	228.7	194.5
11/5/2014	11:15 AM	215.0	228.2	246.9	227.1	62.9	229.3	196.1
11/7/2014	10:00 AM	214.9	228.3	247.4	227.2	57.0	229.0	196.5
11/10/2014	4:30 PM	206.3	218.6	235.7	218.0	72.0	218.8	189.9
11/12/2014	9:50 AM	206.2	218.6	236.0	218.0	36.2	218.5	190.6
11/14/2014	1:40 PM	206.0	218.9	236.4	218.2	47.3	218.3	190.7
11/17/2014	1:50 PM	206.0	219.4	237.3	219.1	28.5	218.2	191.1
11/19/2014	9:50 AM	206.9	220.4	238.5	220.4	48.8	219.5	195.7
11/21/2014	9:45 AM	206.9	220.9	239.1	221.1	41.4	220.3	197.1
11/24/2014	3:10 PM	206.5	221.0	239.6	221.8	44.1	220.2	196.3
11/26/2014	9:38 AM	206.1	220.6	239.2	221.3	36.3	219.8	195.3
11/30/2014	10:00 AM	203.1	218.7	237.7	220.5	71.5	221.0	196.3
12/1/2014	12:00 PM	206.6	222.2	241.1	223.9	40.4	224.6	200.0
12/3/2014	1:15 PM	203.5	219.6	238.9	221.8	58.1	222.3	197.8
12/6/2014	9:30 AM	203.9	220.0	239.1	221.9	40.4	222.0	196.7
12/8/2014	9:30 AM	204.2	220.3	239.3	222.4	44.5	222.3	197.3
12/10/2014	9:25 AM	205.5	220.1	239.6	222.9	38.0	222.4	198.0
12/12/2014	9:30 AM	207.1	215.5	239.6	223.2	40.9	222.0	198.5
12/15/2014	4:30 PM	205.3	217.2	240.7	224.5	54.3	222.6	200.0
12/16/2014	12:05 PM	204.3	216.4	239.8	223.7	37.8	221.5	199.3
12/19/2014	4:10 PM	205.5	218.5	241.1	225.8	41.1	223.2	202.0
12/22/2014	4:00 PM	204.1	217.2	239.8	225.0	49.2	222.2	201.4
12/24/2014	9:40 AM	204.0	217.9	240.3	225.5	41.7	222.5	202.4
12/26/2014	10:00 AM	203.8	218.3	240.7	227.0	58.9	223.6	204.8
12/29/2014	1:30 PM	204.0	219.3	241.5	228.5	55.9	224.8	205.9
12/31/2014	1:40 PM	204.6	220.1	241.8	229.0	37.5	225.1	206.5
59								

TMP 20

9/19/2014		158.6	222.6	252.5	269.9	291.5	295.4	212.8
9/20/2014		153.6	217.4	244.2	260.4	280.5	292.0	208.1
9/21/2014	9:00 AM	146.0	214.6	241.9	262.0	283.0	292.7	208.3
9/22/2014	3:00 PM	159.0	225.6	251.3	268.3	288.6	297.7	214.8
9/23/2014	4:25 PM	152.3	219.4	244.3	260.4	281.6	292.5	209.9
9/23/2014	4:35 PM	154.1	220.5	247.0	262.5	281.6	292.7	208.3
9/24/2014	12:15 PM	154.1	221.1	247.3	262.5	281.5	292.7	208.6

Notes:
- *Only TMP-14R, -19, and -20 have 120' and 140' sensors*
- *See "Notes on Neck TMP Readings" for notes on individual days' readings*

Readings		Temperature (deg F) at Depth Below Ground Surface						
Date	Time	20 ft.	40 ft.	60 ft.	80 ft.	100 ft.	120 ft.	140 ft.

TMP 20

9/25/2014		153.9	221.7	247.7	263.0	281.6	292.9	209.5
9/26/2014	2:45 PM	154.1	222.5	248.0	263.3	281.5	293.1	209.7
9/27/2014	4:00 PM	154.3	223.5	248.2	263.5	281.6	293.2	210.0
9/28/2014	10:30 AM	154.9	224.5	248.9	264.3	282.2	293.9	210.8
9/29/2014	3:20 PM	154.9	225.0	249.1	264.7	282.1	294.0	211.3
9/30/2014	3:20 PM	152.5	226.9	248.0	265.2	282.1	293.5	211.0
10/1/2014	10:00 AM	149.6	227.4	249.3	265.8	282.6	294.0	212.0
10/2/2014	3:00 PM	147.4	228.2	249.7	266.0	283.1	294.3	212.4
10/3/2014	1:15 PM	147.7	228.5	250.0	266.2	283.5	294.7	213.0
10/4/2014	11:30 AM	147.1	228.1	249.0	264.7	282.6	293.6	211.0
10/5/2014	8:28 AM	147.0	228.6	249.6	266.1	283.2	294.1	212.7
10/6/2014	3:45 PM	147.5	229.0	249.8	266.2	282.9	294.3	213.4
10/7/2014		149.0	229.3	250.4	266.6	283.0	294.7	214.0
10/8/2014	10:45 AM	150.9	230.6	251.6	267.7	284.2	295.6	215.1
10/9/2014	3:30 PM	150.0	230.4	250.9	267.2	284.1	295.7	215.3
10/10/2014	2:20 PM	151.3	231.6	251.8	268.0	284.8	296.2	216.1
10/11/2014	2:56 PM	151.4	231.2	251.4	267.5	284.5	296.5	216.4
10/12/2014	2:35 PM	151.0	231.4	251.6	267.9	284.5	295.5	216.2
10/13/2014	3:25 PM	150.8	231.5	251.6	267.9	284.5	296.4	216.8
10/14/2014	3:00 PM	151.2	232.1	252.3	268.6	285.1	296.6	217.3
10/15/2014	1:40 PM	151.5	231.9	251.8	268.0	284.4	296.0	216.6
10/17/2014	1:22 PM	152.9	233.3	253.2	269.4	285.7	298.7	219.7
10/20/2014	2:00 PM	151.1	231.6	251.4	268.0	284.8	299.7	221.2
10/22/2014	8:45 AM	155.2	234.9	254.2	270.7	287.2	299.1	220.7
10/24/2014	4:00 PM	150.8	232.4	251.8	269.2	288.7	300.4	221.7
10/27/2014	3:15 PM	152.3	233.4	252.8	269.7	288.2	299.9	221.6
10/29/2014	10:50 AM	154.3	236.5	255.1	271.9	289.5	299.7	223.7
10/31/2014	1:45 PM	156.2	236.6	255.1	271.6	288.7	299.6	223.5
11/3/2014	11:30 AM	154.4	234.7	253.5	271.0	290.3	300.1	223.2
11/5/2014	11:15 AM	158.0	238.0	256.4	273.0	289.8	300.3	224.4
11/7/2014	10:00 AM	155.8	236.1	254.4	271.0	288.3	298.3	222.1
11/10/2014	4:30 PM	151.8	224.6	240.6	254.8	268.7	277.0	213.8
11/12/2014	9:50 AM	153.4	225.7	241.3	255.3	269.0	277.3	214.3
11/14/2014	1:40 PM	152.3	224.7	240.6	255.0	269.2	278.1	214.4
11/17/2014	1:50 PM	153.2	225.6	240.7	255.2	268.8	277.9	215.3
11/19/2014	9:50 AM	150.9	225.3	241.0	255.3	269.4	278.5	216.1

Notes:
- *Only TMP-14R, -19, and -20 have 120' and 140' sensors*
- *See "Notes on Neck TMP Readings" for notes on individual days' readings*

Readings		Temperature (deg F) at Depth Below Ground Surface						
Date	Time	20 ft.	40 ft.	60 ft.	80 ft.	100 ft.	120 ft.	140 ft.

TMP 20

11/21/2014	9:45 AM	150.8	225.5	241.6	254.9	268.9	277.6	214.7
11/24/2014	3:10 PM	149.4	225.0	241.3	254.7	268.4	277.4	216.0
11/26/2014	9:38 AM	151.3	226.3	242.5	255.8	269.2	278.0	216.7
11/30/2014	10:00 AM	149.6	225.0	241.5	255.0	269.2	277.8	216.9
12/1/2014	12:00 PM	151.0	226.1	242.5	256.0	270.3	279.0	217.8
12/3/2014	1:15 PM	150.9	225.2	241.6	255.4	270.2	279.4	219.1
12/6/2014	9:30 AM	151.9	224.8	240.6	254.3	267.8	276.3	216.6
12/8/2014	9:30 AM	154.1	225.8	241.7	255.4	258.8	277.3	217.8
12/10/2014	9:25 AM	150.4	225.9	241.0	254.4	268.0	276.4	217.1
12/12/2014	9:30 AM	150.9	226.0	240.9	254.5	267.8	276.1	217.0
12/15/2014	4:30 PM	149.8	225.5	242.0	255.0	268.3	276.7	218.0
12/16/2014	12:05 PM	150.4	225.8	241.7	254.8	268.2	276.6	217.9
12/19/2014	4:10 PM	153.0	228.0	243.7	257.2	270.7	279.0	221.1
12/22/2014	4:00 PM	149.6	225.5	241.3	254.6	268.1	276.3	218.7
12/24/2014	9:40 AM	150.7	226.5	241.7	255.3	268.8	277.0	219.5
12/26/2014	10:00 AM	151.1	226.9	242.9	256.0	269.6	277.8	220.5
12/29/2014	1:30 PM	151.8	227.4	244.1	256.6	270.7	278.5	221.6
12/31/2014	1:40 PM	151.1	226.9	242.7	255.8	269.4	277.3	220.7

61

TMP 5-5N

9/16/2014		183.7	207.5	210.2	247.6	274.5		
9/19/2014		194.5	222.1	222.4	271.4	288.9		
9/20/2014		192.7	225.9	225.3	278.4	294.9		
9/21/2014	9:00 AM	193.4	223.3	224.8	274.2	293.4		
9/22/2014	3:00 PM	181.7	210.3	213.0	265.6	279.9		
9/23/2014	4:25 PM	183.4	213.6	216.1	267.8	282.3		
9/23/2014	4:35 PM	183.6	214.4	216.4	268.6	283.2		
9/24/2014	12:15 PM	184.8	214.7	216.7	269.0	283.5		
9/25/2014		183.5	214.6	217.5	269.4	283.3		
9/26/2014	2:45 PM	184.7	214.9	217.8	269.0	282.9		
9/27/2014	4:00 PM	185.7	215.5	218.7	270.2	283.6		
9/28/2014	10:30 AM	185.9	215.9	219.1	270.6	284.4		
9/29/2014	3:20 PM	183.1	214.4	217.9	268.8	282.6		
9/30/2014	3:20 PM	185.0	215.5	220.1	269.8	283.6		
10/1/2014	10:00 AM	95.2	213.8	217.7	268.0	281.6		

Notes:
- *Only TMP-14R, -19, and -20 have 120' and 140' sensors*
- *See "Notes on Neck TMP Readings" for notes on individual days' readings*

Readings		Temperature (deg F) at Depth Below Ground Surface						
Date	Time	20 ft.	40 ft.	60 ft.	80 ft.	100 ft.	120 ft.	140 ft.
TMP 5-5N								
10/2/2014	3:00 PM	77.2	215.7	219.9	270.3	283.8		
10/3/2014	1:15 PM	60.9	216.5	220.3	271.0	284.4		
10/4/2014	11:30 AM	56.8	217.8	221.1	272.2	285.6		
10/5/2014	8:28 AM	55.0	216.0	219.5	270.4	283.9		
10/6/2014	3:45 PM	77.0	216.5	219.8	270.8	284.2		
10/7/2014		84.2	216.6	219.6	271.2	284.6		
10/8/2014	10:45 AM	81.1	212.9	215.9	267.3	280.9		
10/9/2014	3:30 PM	63.6	216.9	214.1	271.0	284.5		
10/10/2014	2:20 PM	56.4	208.5	179.2	272.2	285.8		
10/11/2014	2:56 PM	59.3	203.3	195.9	270.3	284.5		
10/12/2014	2:35 PM	60.5	207.2	205.7	272.3	284.7		
10/13/2014	3:25 PM	67.1	210.6	206.1	272.7	291.9		
10/14/2014	3:00 PM	58.5	200.5	179.2	272.7	285.5		
10/15/2014	1:40 PM	60.0	189.2	160.1	273.0	286.9		
10/17/2014	1:22 PM	76.8	160.3	120.0	276.5	291.8		
10/20/2014	2:00 PM	83.3	158.4	143.5	276.1	290.9		
10/22/2014	8:45 AM	59.5	172.8	167.2	274.1	288.4		
10/24/2014	4:00 PM	85.0	180.6	160.0	272.1	285.1		
10/27/2014	3:15 PM	88.2	151.1	121.9	274.4	289.3		
10/29/2014	10:50 AM	62.1	140.1	102.2	275.3	289.1		
10/31/2014	1:45 PM	60.2	133.8	95.6	278.0	292.0		
11/3/2014	11:30 AM	81.7	132.1	101.1	275.3	289.1		
11/5/2014	11:15 AM	63.3	128.4	93.1	276.9	290.8		
11/7/2014	10:00 AM	59.0	123.0	84.4	274.9	288.1		
11/10/2014	4:30 PM	73.2	117.9	87.1	257.6	268.4		
11/12/2014	9:50 AM	38.7	115.5	80.6	258.3	269.4		
11/14/2014	1:40 PM	52.5	118.0	89.1	260.9	271.2		
11/17/2014	1:50 PM	28.5	113.4	79.1	259.4	270.0		
11/19/2014	9:50 AM	51.1	113.4	84.1	260.5	271.4		
11/21/2014	9:45 AM	42.0	114.5	88.2	259.2	269.8		
11/24/2014	3:10 PM	44.2	122.8	98.7	260.2	271.1		
11/26/2014	9:38 AM	36.2	117.3	91.7	258.7	268.9		
11/30/2014	10:00 AM	71.6	112.1	87.0	260.7	271.2		
12/1/2014	12:00 PM	39.0	111.7	83.2	260.0	269.5		
12/3/2014	1:15 PM	60.6	110.2	77.9	260.3	270.0		
12/6/2014	9:30 AM	40.8	108.0	78.0	259.1	268.8		

Notes:
- Only TMP-14R, -19, and -20 have 120' and 140' sensors
- See "Notes on Neck TMP Readings" for notes on individual days' readings

Readings		Temperature (deg F) at Depth Below Ground Surface						
Date	Time	20 ft.	40 ft.	60 ft.	80 ft.	100 ft.	120 ft.	140 ft.

TMP 5-5N

12/8/2014	9:30 AM	44.7	106.0	76.5	259.9	268.1		
12/10/2014	9:25 AM	38.6	105.4	75.5	259.4	269.3		
12/12/2014	9:30 AM	42.6	102.8	72.9	258.2	268.3		
12/15/2014	4:30 PM	53.2	108.6	82.2	258.9	269.1		
12/16/2014	12:05 PM	38.0	107.7	78.9	258.2	268.3		
12/19/2014	4:10 PM	38.6	103.2	72.3	258.4	268.7		
12/22/2014	4:00 PM	48.8	104.2	76.3	258.0	268.0		
12/24/2014	9:40 AM	43.0	107.2	78.7	259.5	269.5		
12/26/2014	10:00 AM	58.8	101.0	76.0	258.5	268.7		
12/29/2014	1:30 PM	54.1	103.7	74.7	260.4	270.7		
12/31/2014	1:40 PM	38.4	101.2	73.7	261.5	271.9		
62								

TMP 5-5S

9/17/2014		155.5	191.3	188.0	224.0	277.1		
9/19/2014		170.5	228.7	235.4	266.0	295.1		
9/20/2014		169.5	239.9	243.9	276.8	303.6		
9/21/2014	9:00 AM	177.6	239.8	249.8	275.1	299.7		
9/22/2014	3:00 PM	166.5	229.0	240.7	265.5	289.2		
9/23/2014	4:25 PM	167.3	230.0	241.7	265.8	288.0		
9/23/2014	4:35 PM	167.5	229.9	241.6	265.8	288.9		
9/24/2014	12:15 PM	168.6	231.5	243.7	267.3	289.8		
9/25/2014		168.0	231.1	243.9	266.9	289.0		
9/26/2014	2:45 PM	167.9	231.7	244.8	267.4	289.0		
9/27/2014	4:00 PM	167.6	232.2	245.5	267.7	289.0		
9/28/2014	10:30 AM	167.8	232.9	246.4	268.4	289.1		
9/29/2014	3:20 PM	164.4	232.8	246.6	268.2	288.5		
9/30/2014	3:20 PM	164.6	233.2	247.4	268.5	288.8		
10/1/2014	10:00 AM	163.2	233.7	247.7	269.0	289.1		
10/2/2014	3:00 PM	163.2	234.0	248.2	269.2	289.0		
10/3/2014	1:15 PM	163.8	234.8	249.0	270.0	289.4		
10/4/2014	11:30 AM	166.3	236.7	251.3	272.1	291.4		
10/5/2014	8:28 AM	163.8	234.4	248.8	269.4	288.5		
10/6/2014	3:45 PM	164.3	235.7	250.4	271.1	290.0		
10/7/2014		163.5	235.5	250.5	271.3	290.1		
10/8/2014	10:45 AM	163.6	235.2	250.1	270.6	289.1		

Notes:
- *Only TMP-14R, -19, and -20 have 120' and 140' sensors*
- *See "Notes on Neck TMP Readings" for notes on individual days' readings*

Readings		Temperature (deg F) at Depth Below Ground Surface						
Date	Time	20 ft.	40 ft.	60 ft.	80 ft.	100 ft.	120 ft.	140 ft.

TMP 5-5S

10/9/2014	3:30 PM	164.3	235.9	250.7	271.0	289.0		
10/10/2014	2:20 PM	166.1	237.0	251.8	271.9	289.8		
10/11/2014	2:56 PM	164.3	236.2	251.1	271.3	289.0		
10/12/2014	2:35 PM	165.0	236.7	251.7	271.7	289.3		
10/13/2014	3:25 PM	163.4	237.6	252.4	272.8	289.7		
10/14/2014	3:00 PM	163.7	237.2	252.3	273.0	289.4		
10/15/2014	1:40 PM	165.1	237.4	252.7	274.1	289.7		
10/17/2014	1:22 PM	163.1	237.7	253.3	275.3	290.6		
10/20/2014	2:00 PM	161.1	238.1	253.5	274.1	289.5		
10/22/2014	8:45 AM	160.7	238.8	254.1	274.1	289.6		
10/24/2014	4:00 PM	157.8	238.9	253.9	273.4	289.0		
10/27/2014	3:15 PM	157.4	239.3	254.4	273.7	288.9		
10/29/2014	10:50 AM	159.4	242.0	257.6	278.2	292.0		
10/31/2014	1:45 PM	159.7	242.0	257.9	278.7	292.5		
11/3/2014	11:30 AM	157.7	239.7	256.5	278.9	290.3		
11/5/2014	11:15 AM	160.1	241.5	258.0	278.6	292.2		
11/7/2014	10:00 AM	158.4	239.2	256.2	277.0	289.9		
11/10/2014	4:30 PM	156.3	228.6	243.4	260.7	271.0		
11/12/2014	9:50 AM	157.8	228.7	243.6	260.1	271.2		
11/14/2014	1:40 PM	157.4	228.3	243.6	260.9	271.4		
11/17/2014	1:50 PM	158.4	228.9	244.0	261.0	271.6		
11/19/2014	9:50 AM	158.7	228.9	244.7	262.8	273.1		
11/21/2014	9:45 AM	157.5	227.6	243.1	260.5	271.0		
11/24/2014	3:10 PM	158.2	228.3	244.0	261.2	271.4		
11/26/2014	9:38 AM	153.9	228.7	243.2	260.1	270.3		
11/30/2014	10:00 AM	153.7	227.5	242.2	260.9	270.6		
12/1/2014	12:00 PM	155.5	229.0	243.7	261.7	271.7		
12/3/2014	1:15 PM	154.6	228.5	243.4	261.8	271.7		
12/6/2014	9:30 AM	156.0	229.3	243.6	260.9	270.5		
12/8/2014	9:30 AM	155.2	228.9	243.5	261.0	270.6		
12/10/2014	9:25 AM	155.2	228.9	243.2	260.7	270.2		
12/12/2014	9:30 AM	154.3	228.0	242.5	260.0	269.5		
12/15/2014	4:30 PM	154.5	228.1	247.0	260.8	270.0		
12/16/2014	12:05 PM	159.6	227.9	242.7	260.4	269.8		
12/19/2014	4:10 PM	153.6	227.9	242.7	260.3	269.7		
12/22/2014	4:00 PM	153.2	227.6	242.5	260.1	269.3		

Notes:
- *Only TMP-14R, -19, and -20 have 120' and 140' sensors*
- *See "Notes on Neck TMP Readings" for notes on individual days' readings*

Readings		Temperature (deg F) at Depth Below Ground Surface						
Date	Time	20 ft.	40 ft.	60 ft.	80 ft.	100 ft.	120 ft.	140 ft.

TMP 5-5S

12/24/2014	9:40 AM	154.5	228.7	243.5	261.0	270.2		
12/26/2014	10:00 AM	153.0	227.4	243.0	261.8	270.9		
12/29/2014	1:30 PM	154.2	228.8	244.8	263.8	272.8		
12/31/2014	1:40 PM	154.7	229.7	246.1	263.9	272.6		
62								

TMP 5-9N

9/17/2014		169.6	205.3	188.0	235.2	259.2		
9/19/2014		176.6	223.2	225.1	261.5	286.6		
9/20/2014		173.0	221.2	226.9	266.9	286.4		
9/21/2014	9:00 AM	170.6	219.7	224.6	263.7	287.8		
9/22/2014	3:00 PM	176.6	222.7	229.8	263.4	279.7		
9/23/2014	4:25 PM	174.1	221.8	227.7	264.2	280.8		
9/23/2014	4:35 PM	174.3	222.2	229.1	266.6	283.3		
9/24/2014	12:15 PM	174.5	222.2	229.3	266.8	283.5		
9/25/2014		174.7	223.1	230.7	268.4	284.5		
9/26/2014	2:45 PM	174.0	223.1	230.6	268.5	284.3		
9/27/2014	4:00 PM	174.6	224.0	232.1	269.6	285.2		
9/28/2014	10:30 AM	174.4	224.2	232.5	270.3	285.4		
9/29/2014	3:20 PM	173.0	223.7	232.1	269.8	284.8		
9/30/2014	3:20 PM	173.4	224.3	233.0	270.3	285.2		
10/1/2014	10:00 AM	172.2	222.7	231.5	268.8	283.4		
10/2/2014	3:00 PM	174.3	225.4	234.3	271.6	286.2		
10/3/2014	1:15 PM	174.9	225.7	235.0	272.6	287.3		
10/4/2014	11:30 AM	175.3	226.7	236.0	273.8	288.4		
10/5/2014	8:28 AM	173.6	225.3	234.6	271.9	286.4		
10/6/2014	3:45 PM	173.8	226.0	235.5	272.7	287.3		
10/7/2014		173.3	225.7	235.5	272.8	287.4		
10/8/2014	10:45 AM	168.0	220.7	230.5	267.9	282.8		
10/9/2014	3:30 PM	174.1	226.5	235.9	273.1	287.6		
10/10/2014	2:20 PM	175.8	227.6	237.3	274.2	288.9		
10/11/2014	2:56 PM	174.0	226.6	235.6	273.3	287.8		
10/12/2014	2:35 PM	173.6	226.5	235.0	273.4	287.9		
10/13/2014	3:25 PM	172.1	226.9	235.5	274.3	288.6		
10/14/2014	3:00 PM	168.7	226.5	234.8	274.1	288.4		
10/15/2014	1:40 PM	167.9	226.1	234.2	274.5	290.0		

Notes:
- *Only TMP-14R, -19, and -20 have 120' and 140' sensors*
- *See "Notes on Neck TMP Readings" for notes on individual days' readings*

Readings		Temperature (deg F) at Depth Below Ground Surface						
Date	Time	20 ft.	40 ft.	60 ft.	80 ft.	100 ft.	120 ft.	140 ft.

TMP 5-9N

10/17/2014	1:22 PM	167.8	226.1	231.6	276.1	291.8		
10/20/2014	2:00 PM	164.5	220.0	220.1	273.8	288.3		
10/22/2014	8:45 AM	166.4	219.3	217.3	274.4	288.5		
10/24/2014	4:00 PM	162.3	215.5	214.3	272.8	281.5		
10/27/2014	3:15 PM	164.0	215.9	213.7	274.2	289.3		
10/29/2014	10:50 AM	163.0	213.2	209.1	273.1	288.6		
10/31/2014	1:45 PM	164.7	213.8	207.8	276.2	291.5		
11/3/2014	11:30 AM	161.9	208.6	199.9	275.0	290.5		
11/5/2014	11:15 AM	162.8	207.9	198.1	276.3	291.8		
11/7/2014	10:00 AM	160.1	204.1	193.7	275.0	291.0		
11/10/2014	4:30 PM	156.2	194.8	183.9	258.6	271.0		
11/12/2014	9:50 AM	155.6	193.2	181.8	258.6	271.2		
11/14/2014	1:40 PM	156.0	193.1	181.3	260.9	274.7		
11/17/2014	1:50 PM	154.3	190.1	177.2	258.0	269.6		
11/19/2014	9:50 AM	153.2	188.9	176.6	261.1	274.4		
11/21/2014	9:45 AM	151.8	186.7	173.8	259.1	272.0		
11/24/2014	3:10 PM	151.8	186.1	173.3	260.1	273.4		
11/26/2014	9:38 AM	150.8	185.0	172.3	258.9	271.3		
11/30/2014	10:00 AM	148.2	182.3	169.3	258.4	271.2		
12/1/2014	12:00 PM	148.8	182.5	169.1	258.8	271.2		
12/3/2014	1:15 PM	147.9	182.0	168.9	259.8	272.9		
12/6/2014	9:30 AM	148.1	181.2	167.3	259.4	271.3		
12/8/2014	9:30 AM	146.8	179.8	165.7	259.3	271.3		
12/10/2014	9:25 AM	146.4	179.2	164.9	259.3	271.2		
12/12/2014	9:30 AM	145.1	177.7	163.4	258.7	270.6		
12/15/2014	4:30 PM	144.7	177.5	163.0	259.4	271.3		
12/16/2014	12:05 PM	143.8	176.4	162.1	258.9	271.0		
12/19/2014	4:10 PM	143.0	175.8	161.6	259.1	271.2		
12/22/2014	4:00 PM	141.9	174.4	160.3	259.1	270.6		
12/24/2014	9:40 AM	144.5	175.7	161.8	261.3	272.3		
12/26/2014	10:00 AM	141.7	173.0	159.3	259.5	270.7		
12/29/2014	1:30 PM	142.0	173.1	159.7	261.0	272.7		
12/31/2014	1:40 PM	143.0	174.1	160.9	262.8	274.3		
62								

TMP 5-9S

Notes:
- *Only TMP-14R, -19, and -20 have 120' and 140' sensors*
- *See "Notes on Neck TMP Readings" for notes on individual days' readings*

Readings		Temperature (deg F) at Depth Below Ground Surface						
Date	Time	20 ft.	40 ft.	60 ft.	80 ft.	100 ft.	120 ft.	140 ft.

TMP 5-9S

9/16/2014		156.9	197.9	228.3	247.7	283.5		
9/19/2014		157.5	228.4	252.0	264.6	288.3		
9/20/2014		168.1	238.1	258.1	273.5	296.6		
9/21/2014	9:00 AM	163.4	233.8	249.3	266.6	287.7		
9/22/2014	3:00 PM	161.4	232.8	247.6	266.1	287.3		
9/23/2014	4:25 PM	159.5	231.0	247.0	264.8	285.9		
9/23/2014	4:35 PM	160.0	231.5	247.3	264.8	285.5		
9/24/2014	12:15 PM	161.0	233.0	248.1	266.3	286.3		
9/25/2014		160.2	233.2	248.2	266.3	285.7		
9/26/2014	2:45 PM	160.4	233.8	248.8	267.0	286.0		
9/27/2014	4:00 PM	160.3	234.0	249.1	267.2	285.7		
9/28/2014	10:30 AM	160.9	234.6	249.5	267.8	286.1		
9/29/2014	3:20 PM	159.0	234.2	249.3	267.7	286.0		
9/30/2014	3:20 PM	161.4	235.0	250.0	268.4	285.8		
10/1/2014	10:00 AM	161.4	235.3	250.3	268.7	286.1		
10/2/2014	3:00 PM	160.7	235.6	250.7	269.2	286.5		
10/3/2014	1:15 PM	161.1	236.2	251.7	270.0	287.0		
10/4/2014	11:30 AM	163.2	238.4	254.0	271.9	288.1		
10/5/2014	8:28 AM	160.3	235.8	251.5	269.8	286.3		
10/6/2014	3:45 PM	161.3	231.3	253.0	271.0	287.5		
10/7/2014		160.7	237.8	253.7	271.9	287.5		
10/8/2014	10:45 AM	159.7	236.2	251.9	269.9	285.3		
10/9/2014	3:30 PM	159.6	236.7	252.9	263.2	286.9		
10/10/2014	2:20 PM	154.6	237.5	253.8	264.3	287.7		
10/11/2014	2:56 PM	153.2	236.8	253.3	264.1	287.1		
10/12/2014	2:35 PM	153.3	237.2	253.7	264.1	287.3		
10/13/2014	3:25 PM	154.0	237.6	254.3	271.8	287.5		
10/14/2014	3:00 PM	154.2	237.5	254.4	272.6	287.8		
10/15/2014	1:40 PM	155.8	237.6	254.7	273.2	287.3		
10/17/2014	1:22 PM	156.5	239.1	256.2	274.5	289.2		
10/20/2014	2:00 PM	150.3	238.4	255.4	273.4	287.4		
10/22/2014	8:45 AM	150.2	238.4	256.0	274.3	289.3		
10/24/2014	4:00 PM	148.3	238.3	255.8	274.1	288.4		
10/27/2014	3:15 PM	148.1	238.0	256.1	274.3	288.9		
10/29/2014	10:50 AM	150.3	240.8	258.8	276.4	290.3		
10/31/2014	1:45 PM	149.8	240.9	259.1	276.5	291.1		

Notes:
- *Only TMP-14R, -19, and -20 have 120' and 140' sensors*
- *See "Notes on Neck TMP Readings" for notes on individual days' readings*

Readings		Temperature (deg F) at Depth Below Ground Surface						
Date	Time	20 ft.	40 ft.	60 ft.	80 ft.	100 ft.	120 ft.	140 ft.

TMP 5-9S

11/3/2014	11:30 AM	148.0	239.4	257.4	274.7	290.2		
11/5/2014	11:15 AM	149.0	242.8	259.9	277.2	293.6		
11/7/2014	10:00 AM	146.9	240.7	257.3	274.7	291.1		
11/10/2014	4:30 PM	144.5	229.5	243.8	258.7	272.0		
11/12/2014	9:50 AM	145.0	230.0	244.5	259.3	272.3		
11/14/2014	1:40 PM	144.9	230.0	244.7	260.0	272.8		
11/17/2014	1:50 PM	145.8	230.2	245.2	260.3	272.6		
11/19/2014	9:50 AM	146.7	231.3	248.3	262.7	274.6		
11/21/2014	9:45 AM	144.8	230.0	245.9	260.5	273.4		
11/24/2014	3:10 PM	147.0	230.3	245.9	260.3	273.0		
11/26/2014	9:38 AM	146.6	229.3	244.5	258.7	270.9		
11/30/2014	10:00 AM	145.0	229.1	246.3	261.4	273.8		
12/1/2014	12:00 PM	150.5	230.3	246.6	261.7	273.5		
12/3/2014	1:15 PM	150.2	229.8	246.6	261.0	273.7		
12/6/2014	9:30 AM	149.6	229.1	244.9	259.4	271.8		
12/8/2014	9:30 AM	151.8	229.1	245.0	259.5	271.7		
12/10/2014	9:25 AM	151.5	228.7	244.6	259.1	271.3		
12/12/2014	9:30 AM	151.0	228.0	243.9	258.5	271.0		
12/15/2014	4:30 PM	150.9	228.7	244.0	259.4	271.5		
12/16/2014	12:05 PM	151.5	228.6	244.7	259.4	271.4		
12/19/2014	4:10 PM	152.1	228.4	244.5	259.1	271.1		
12/22/2014	4:00 PM	150.4	227.9	244.0	258.8	270.6		
12/24/2014	9:40 AM	149.6	229.0	245.1	259.8	271.6		
12/26/2014	10:00 AM	149.7	229.6	247.1	262.1	274.0		
12/29/2014	1:30 PM	150.4	230.9	247.7	262.9	275.3		
12/31/2014	1:40 PM	151.4	230.5	247.4	262.5	274.5		

62

Notes:
- Only TMP-14R, -19, and -20 have 120' and 140' sensors
- See "Notes on Neck TMP Readings" for notes on individual days' readings