December 1, 2014

Mr. Chris Nagel
Missouri Department of Natural Resources
Solid Waste Management Program
1738 East Elm Street
Jefferson City, Missouri 65101

Re: Expanded Heat Removal Pilot Study
Bridgeton Landfill, Bridgeton, Missouri
Permit No. 0118912

Dear Mr. Nagel:

This letter is in response to a Missouri Department of Natural Resources (MDNR) letter dated August 25, 2014 and the Expanded Heat Removal Pilot Study section of a September 4, 2014 letter. The MDNR letter requested additional information with regards to the planned Expanded Heat Extraction Pilot Study at the Bridgeton Landfill (BL). A point by point response has been provided below.

COMMENTS FROM MNDR AUGUST 25, 2014 LETTTER:

MDNR COMMENT 1. As of the date of this letter, the SWMP has not received a pilot study report containing:

- ***a technical narrative detailing how the study was operated,***
- ***the dates of the study, method(s) used for data collection,***
- ***summarized and raw data collected,***
- ***a listing of any problems encountered,***
- ***solutions identified to address those problems, if any,***
- ***outcomes and conclusions,***
- ***any other issues encountered, and***
- ***proposed modifications to the design of the study, if any, that will be incorporated into any requested expansion or extension.***

Response to Comment 1 Bullet Item 1:

<u>Technical Narrative</u>

In September of 2013, Gas Interceptor Well (GIW)-4 was modified to remove heat through the circulation of water in a closed loop within the well. The as-built representing the heat removal modification to GIW-4 has been included as Attachment 1 (GIW-4 Modified for Heat Removal).

The operation and monitoring of GIW-4 as a heat removal point has continued to date. The primary data collection period was conducted from 9/26/13 to 12/6/13. The primary data

parameters recorded were the inflow and outflow water temperatures, flow rate and the temperature within the casing as measured by thermocouples at multiple depths. Using these parameters, a calculated heat removal rate in kilowatts (kW) was determined on a near daily basis.

Pursuant to an evaluation of the data, a quantitative heat removal rate and temperature effect was determined. A value of 20 kW, assuming inflow water temperatures would be on the order of 80 °F, will be utilized for each heat extraction point of similar type for the purpose of selecting the minimum size of a cooler unit. The sizing is based on the ambient temperatures of the summer months affecting the air with an evaporative spray cooler. The data collected showed a significant reduction in temperatures within the casing outside of the outer heat removal piping and that the heat exchanger element within the casing operated on a Δ T of about 10 °F with an extraction rate of approximately 25kW. The extraction rate was maintained during this period, due to constantly falling inlet temperatures caused by dropping ambient temperatures during the initial test period.

The next phase of the pilot study is to include measurement of thermocouples installed within adjacent Temperature Monitoring Probes (TMPs). The proposed TMP location and depths are designed to be offset near the heat extraction point. Specifically, the proposed TMP measurements will be utilized to allow the determination of thermal conductivity and heat storage properties during a relatively short period of time (3 to 6 months) based on non-steady state conditions. For this reason the TMPs that are close to the extraction points and are only extended to a depth where the conditions are expected to be free of bottom effects associated with the end of the extraction points. The other points (TMPs 19, 20 and 14R) are deep enough to allow longer term impacts associated with depth and distance to be evaluated.

The relatively radially constant measurements will be utilized as empirical data to assist in modeling of heat extraction points relative to heat fronts. TMPs 19, 20 and 14R are to be used for a longer term measurement of the effect of heat extraction points within or adjacent to heat fronts.

Response to Comment 1 Bullet Item 2:

The initial period of operation and data collection of the heat extraction point installed in GIW-4 was from 9/26/13 to 12/7/13. The data points collected included flow rate of water, temperature within the well and temperature of influent and effluent water. The rate of flow of water pumped into the heat extraction point was measured with a mechanical flow meter with a digital display. Temperatures with in the GIW-4 was measured at depths of 62’, 102’ and 137’ below the top of the casing. These temperatures where measured by Type T thermocouples and applicable meter. The temperatures of the influent and effluent water was measured by Resistance Temperature Detector (RTD) and applicable meter.

Response to Comment 1 Bullet Item 3:

An analysis of the data showed a quantitative heat removal rate and temperature effect. A value of 20 kW, assuming inflow water temperatures would be on the order of 80 °F, will be

utilized for each heat extraction point of similar type for the purpose of selecting the minimum size of a cooler unit. The sizing is based on the ambient temperatures of the summer months affecting the air with evaporative spray cooler. The data collected showed a significant reduction in temperatures within the casing outside of the outer heat removal piping and that the heat exchanger element within the casing operated on a Δ T of about 10 °F with an extraction rate of approximately 25kW. The extraction rate was maintained during this period, due to constantly falling inlet temperatures caused by dropping ambient temperatures during the initial test period. The raw data file has been included in excel format (Heat Extraction GIW 4 -2013.xls)

Response to Comment 1 Bullet Item 4:

The heat extraction system installed in GIW-4 was able to extract heat and provide quantitative data regarding the capacity of extraction expected in similarly designed points. The system was not designed to operate for extended periods below freezing ambient temperatures. The heat extraction point was not operated for an extended period due to the below normal winter conditions.

Response to Comment 1 Bullet Item 5:

The long term heat extraction design will utilize a polypropylene glycol mixture to prevent issues related to ambient temperatures below freezing.

Response to Comment 1 Bullet Item 6:

As stated above, the operation of GIW-4 as a heat extraction point provided quantitative data to assist in the design of a long term heat extraction system.

Response to Comment 1 Bullet Item 7:

See Comment 1 Bullet Item 4.

Response to Comment 1 Bullet Item 8:

The modified heat extraction system points will operate in a similar manner as GIW-4 was in the fall of 2013. Minor modifications will include down-hole tubing, closed loop cooling tower and the use of glycol mixture. The heat extraction points will be installed with two stainless steel tubes and a U-joint at the bottom. The system will also include a temperature controlled cooling tower. A polypropylene glycol mixture will be utilized as a heat exchange media. The heat extraction at each point will be similar to the operation of GIW-4.

MDNR Comment 2.
Point 1 – During previous drilling in the neck area and with the identified risk of back pressure in this area, construction activities may result in an increased level of odors in the neck area that have the potential to extend beyond the permitted facility's property boundary. No reference to an odor mitigation plan was included in the submittal. How

does Bridgeton Landfill plan to manage any odors or instances where odors potentially may migrate off-site during drilling, pilot study construction activities or during operation of the study?

Response:

The drilling procedures utilized resulted in minimal odors during the TMP installations. The procedure included drilling the 4" casing to the design depth in the plans. The drilling tip was then removed with a steel rod and left at the end of the casing. The 4" casing was then filled with a grout backfill mix with a significant solids content but low strength and long set time. Some trial tests of the grout mix were completed to refine the mix proportions and allow for extended set times at elevated temperature. This is designed to minimize odors during the removal of the casing. The grout backfill procedure and completing installation consistent with the Bridgeton Landfill Odor Control Plan minimized odors during the installation process.

Point 2 – Given the depth in the neck area of approximately 240-260 feet, why are the additional TMPs at GIWs -5 and -10 only being drilled to a depth of 100 feet? To monitor the effect of the heat removal system, should the TMPs be installed at least to the depth of the GIWs? Additionally, please provide the depth to which the heat removal pipe is being installed as this information was not included in any of the previous submittals.

Response:

The proposed depth of 100 feet was selected to provide radially constant data adjacent to the heat extraction point, in a relatively short period of time. Also, as discussed in the Technical Narrative, this depth will allow data collection to minimize the impact of end point conditions of the heat extraction point relative to data collection. The heat extraction point piping will be installed to the maximum depth feasible in each Gas Interceptor Well casing. The actual depth installed will be presented in an as-built to MDNR post construction and included in the first pilot study update to be submitted January 20, 2015.

MDNR Comment 3. Is the method being used to drill and install the additional TMPs the same as for the new North Quarry TMPs -16, 17 and 18?

Response:

The installation procedure was similar to the methods used for the three additional TMP installations (TMP 16, 17, and 18) with the exception of the backfill protocol described in the response to MDNR Comment 2 Point 1.

MDNR Comment 4. Explain the criteria used to determine the grout mixture.

Response:

The design purpose of the backfill grout mixture is to achieve a high solid mix to reduce abrasion to the thermocouples over time. See the response to Comment 2 above. The strength of the mix will be low enough, less than 10 psi, to allow the mix to deform plastically in response to settlement.

MDNR Comment 5. Explain the steps used for installing the TMP and grout and how the outer drill casing will be pulled.

Response:

See response to MDNR Comment 2 Point 1.

MDNR Comment 6. Along with the as-built submittals, please include the technical literature for the following components:

- ***the cooling unit, including flow rate and the delta Temperature expected,***
- ***the bag filtration system, and***
- ***the pump.***

Response:

This information will be included in the as-builts as requested. This information will be included in the first quarterly pilot study update to be submitted January 20, 2015.

MDNR Comment 7. Is the temperature data from the TMPs only used to access and identify the heat extraction radius of influence or are there other uses for the data? If there are other uses, please include them in the technical narrative.

Response:

As delineated in the Technical Narrative above, the additional TMPs will be utilized to evaluate and model the effect of heat extraction points on adjacent heat fronts.

MDNR Comment 8. The August 15, 2014, submittal contained a subsurface detail for the TMPs. A complete detailed construction drawing (above ground and below ground) of the TMPs must be included with the as-built drawings.

a. ***Is the design identical to the existing TMPs or have modifications been made to improve their durability given conditions being experienced in this area of the landfill that is impacted by the subsurface fire?***
b. ***If the support rod is not attached to the sheath, what purpose does it serve?***
c. ***Will the electrical ties used to secure the sheath to the TMP wires act as a pulling point if the grout shifts or shrinks?***
d. ***As the hydraulic pressure of the grout should prevent heat transfer to the other TMPs, have you considered if it would be a better practice to tape the wires together before putting them in the sheath and close the end of the sheath at the bottom before grouting?***

e. ***Figure 1 of the August 15, 2014, submittal shows a piece of CPVC pipe extending down from the surface 20 feet and then an adapter on the bottom of the pipe attaching the 3/4 inch Pyrojacket abrasive sheath for covering the TMPs. The note on Figure 1 under the identifier for the Pyrojacket states that it "stops 20 feet below the ground surface". Please clarify if this is supposed to be "starts 20 feet below ground surface"?***

Response to 8a:

The revised grout mixture and procedure for insertion are designed to improve the durability of the TMPs.

Response to 8b:

The support rod was attached to the sheath using wire ties and tape. This will be clearly reflected in the as-builts of the TMPs.

Response to 8c:

The grout mixture in combination with the TMP strand should act in a relatively uniform manner.

Response to 8d:

The wires were taped inside the sheath as part of the installation. The end of the sheath was also closed as part of the TMP installation. This will be reflected in the as-builts post construction.

Response to 8e:

The CPVC pipe extended from the lower junction box to approximately 20' below the ground surface. This will be reflected graphically in the as-built drawings.

MDNR Comment 9: A technical narrative in support of the expanded heat extraction pilot study including TMPs must be included.

Response:

Please see the Technical Narrative provided above.

MDNR Comment 10: The cover letter states six (6) additional GIWs will be outfitted with closed loop heat exchange piping and (8) additional TMPs will be installed. Why are TMPs only being installed by two (2) of the six (6) GIWs? How were the two GIWs selected from the six for TMP placement? Specifically, what was the selection criteria used? And how were two (2) GIWs determined to be sufficient to determine success/failure of the project?

Response:

Please refer to the technical narrative provided above. Additionally, the installation access was evaluated for selection of GIWs to install TMPs adjacent. Any and all heat extraction in the neck area is deemed beneficial. This phase of data collection will be utilized to measure the effect of the heat extraction points as delineated in the Technical Narrative.

MDNR Comment 11: Drawing 4: What is the frac tank used for? The drawings submitted on August 18, 2014, depict the cooling tower has a make-up water connection supplied. Is there another reason for such a large make-up water tank (i.e., the frac tank)? Will there be any chemicals added to the water that pose a potential for odors? If so, has this been addressed in the odor management plan for the expanded pilot study?

Response:

The frac tank is being used as an equalization tank for the system. The tank is of adequate size to manage the system water as designed. A chemical treatment system will be utilized. No distinguishable odors are expected from the chemical treatment of the water in the open cooling tower system.

MDNR Comment 12: Additional temperature monitoring locations are identified on the heat influent and effluent piping in Drawing 3 of the August 15, 2014, submittal. Information should be provided related to this temperature monitoring, such as frequency and equipment used. Additionally, Figure 2 shows an RTD probe on the effluent line and a digital turbine flow meter on the influent line of each GIW. This monitor and meter appear to be in addition to the temperature monitoring being conducted on the main line. Please clarify, if these are additional points where temperature and flow will be monitored for this study.

Response:

The heat removal (kW) accomplished at each heat extraction point will be measured individually. This will be done by measuring the influent and effluent temperatures and the flow rate at each heat extraction point respectively. The flow rate at each heat extraction point will be adjusted systematically to maintain the design heat removal at each point.

MDNR Comment 13: A back pressure valve is identified near existing GIW-7. Please explain the type of valve used and it functionality.

Response:

A check valve will be utilized at the location noted in the comment above. The purpose of this valve is to manage the excess flow from the system pump greater than what is required cumulative at all heat extraction points. For example, if the system pump is discharging 100 GPM and the cumulative of the flow of the heat extraction points is 80 GPM, then the excess 20 GPM will be managed by the check valve to the return line.

MDNR Comment 14: Given that GIW-4 ceased operating during freezing conditions during the winter of 2013-2014 and with the tank, pump, cooling device and pipes all apparently exposed to the elements, please explain what steps/methods are being used to winterize the equipment to ensure uninterrupted winter operation of the system. Such as, will the closed system be operated with antifreeze? Or are you expecting sufficient heat being extracted to keep the system from freezing and how was this determined? If the present submittal is a warm weather submittal only, you will need to include information related to cold weather operation with the re-submittal.

Response:

The system is not designed to handle winter conditions currently. The intent of the initial design is to operate above freezing conditions. The Bridgeton Landfill (BL) is planning a closed glycol system or winterization plan for the current system prior to inclement weather. BL is initiating the system with the rental of an open cooler system due to the extended lead time needed to procure a closed loop cooling tower.

MDNR Comment 15: Did you consider whether the cooling unit might generate a greater delta T for the loops, if the cooling unit was installed before the pump going to the loops and then bringing the return line to the opposite end of the tank? Will the cooling unit sustain a higher flow capacity than the pump to the loops? If so, did you consider whether the system might work more efficiently by having the cooling unit chill the tank water (and that a smaller tank might work better) rather than just cooling the return loop?

Response:

The long term design for the system is a closed glycol loop cooling tower system that controls the discharge temperature on the outflow of the cooling tower. This will result in a controlled influent temperature at each heat extraction point. BL would like to initiate heat extraction as soon as possible. Therefore, a rental open cooling tower has been procured to expedite the start of heat extraction. The best apparent rental option available within the capacity constraints was an open air cooling tower. The open air cooling tower is designed to be pressurized on the influent pipe and gravity flow out of the discharge piping. The closed loop system as-built will be included in the January 20, 2015 submittal.

MDNR Comment 16: What is the pump capacity and the expected flow rate to the cooling loops?

Response:

The heat extraction system is expected to require 80 to 90 GPM for operation of all 7 points. The selected pump has a design flow rate in excess of design conditions. The pump will be equipped with a variable frequency drive for increased control of flow rate during operations. The Pump Data Sheet supplied by the manufacturer is attached.

MDNR Comment 17: How will effectiveness for each of the individual GIWs be determined? Will effectiveness be based on the amount of heat removed or by the radius of influence as determined by the TMPs?

Response:

Data collected, as outlined in the Technical Narrative, will be input into three-dimensional numerical models to quantitatively predict longer term impacts of the pilot system and potential future systems. The intended purpose of this system is to further the understanding of the heat related properties of the waste materials to allow predictions to be made with a higher degree of confidence.

MDNR Comment 18: Please identify the distance from each of the two GIWs (GIW-5 and GIW-10) to each of the TMPs installed around it (i.e., GIW-5 and TMPs identified on Drawing 3 as GIW-5-9N, GIW-5-5N, GIW-5-5S, GIW-5-9S and GIW-10 and TMPs identified as GIW-10-9N, GIW-10-5N, GIW-10-5S, GIW-10-9S).

Response:

The designation represents the distance and direction from the respective GIW. Specifically, the number represents linear feet from the GIW and the letter represents the general direction of north or south. (GIW-5-9N represents 9 ft. to the north of the GIW-5. GIW-10-5S represents 5 ft. to the south of the GIW-10) The direction and distance are approximate. The actual location of the TMPs will be presented in the as-built documentation to the exact Northing and Easting.

MDNR Comment 19: If the modified GIWs continue to operate as interceptor wells after modification, please provide a detailed construction drawing for the modified GIWs including the cooling loop size, length, bore diameter, depth to water and identify all vacuum lines and connections.

Response:

Please find the detail for the modified GIWs to heat extraction points (Heat Extraction Point Detail). As shown in the detail, the side flange will be connected to a leachate transport line and landfill gas extraction header. Vacuum will be applied to the well via the connection to the landfill gas header system.

MDNR Comment 20: The August 15, 2014, submittal cover letter states in the second paragraph that the heat exchange pipe will be installed in six (6) additional GIWs and the last paragraph states alternative heat extraction components will be installed in the seven (7) selected GIWs. Are the existing pipes in GIW-4 being replaced?

Response:

The proposed heat extraction piping will be modified in GIW-4 to correspond to the additional six GIWs. All seven (7) modified GIWs will be operated as heat extraction points.

MDNR Comment 21: What is the function of the knife gate valve shown in the center of the GIW in Figure 2 of the August 15, 2014, submittal?

Response:

It is general practice at BL to install knife gate valves on all wells for potential future maintenance purposes.

MDNR Comment 22: Is the U-tube heat extraction pipe purchased pre-assembled or assembled on site? The drawing shows both stainless steel connectors and a u-tube welded to the pipe. Please clarify, if both the connectors and welding will be used or if a single type of connection has been selected for the balance of the study.

Response:

All fittings will be connected in the field excluding the welded fittings connecting the 180° bend to the bend sockets and the stainless steel nipples connected to the top flanges.

COMMENTS FROM MNDR SEPTEMBER 4, 2014 LETTTER:

Bullet Number 5 in First Paragraph of "Expanded Heat Removal Pilot Study"

- ***A quarterly update on the progress of the pilot study to be submitted along with the facility's monthly report.***

Response:

The BL will submit a quarterly progress report to MDNR presenting information collected regarding the Heat Extraction Pilot Study. The BL proposes the first quarterly update be submitted on January 20, 2015. This report will include data collected prior to January 1, 2015. Subsequent quarterly updates will be submitted until the completion of the pilot study.

CONDITIONS: 1. Other information required to be submitted by Bridgeton Landfill as detailed in the August 25, 2014, response letter is still required and must be provided as it becomes available to the facility, but no later than submittal of the pilot study report.

The BL has included the requested information with this letter and attachments.

CONDITIONS: 2. Pilot projects for beneficial use are usually granted by the SWMP for a period not to exceed one year. Reports are received to evaluate the effectiveness of the project. The initial pilot project report must be submitted one month prior to the first year anniversary of the date of this letter. The pilot project will be allowed to continue while the report is being reviewed.

The BL will submit the initial pilot project report one month prior to the first anniversary of this letter, dated December 1, 2014.

If you need additional information, please contact me at (314) 744-8166.

Sincerely,

Brian J. Power

Brian J. Power
Environmental Manager
Bridgeton Landfill, LLC.

Attachments

Attachment 1 (GIW-4 Modified for Heat Removal)
Attachment 2 (Heat Extraction – Details)
Attachment 3 (Pump Data Sheet)
Attachment 4 (Heat Extraction GIW-4 2013.xls)

Attachment No. 1 (GIW-4 Modified for Heat Removal)

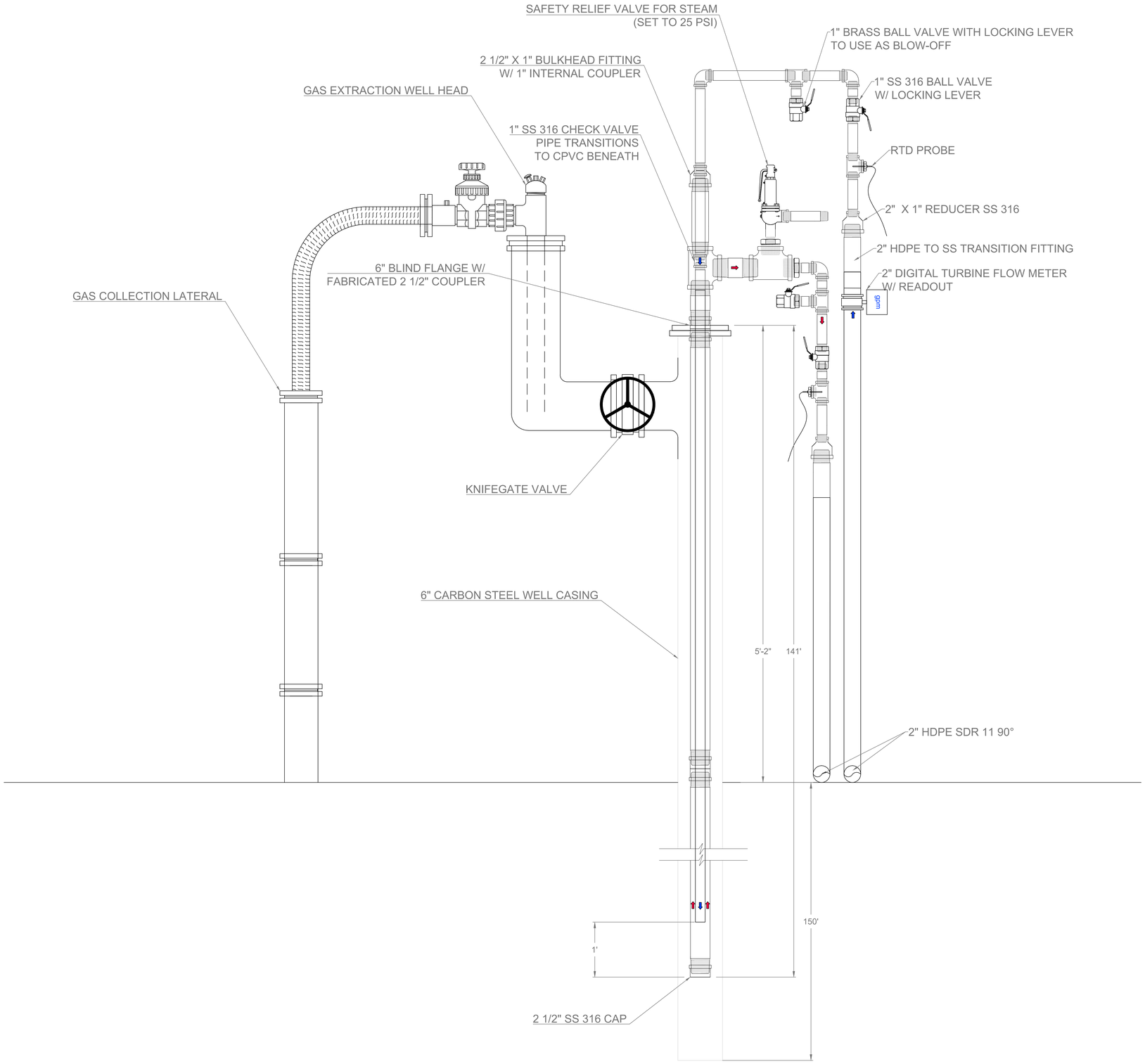

1
000

GIW-4 (MODIFIED FOR HEAT REMOVAL)

NTS

BRIDGETON LANDFILL, LLC 13570 ST. CHARLES ROCK ROAD BRIDGETON, MISSOURI 63044	BRIDGETON LANDFILL COOLING WELL INSTALLATION RECORD DRAWING	Engineering for a Better World FEEZOR ENGINEERING, INC.	SEPTEMBER 2013 DESIGNED BY: BJV APPROVED BY: ALK	DRAWING NO.: 000
GIW-4 MODIFIED FOR HEAT REMOVAL				
PROJECT NUMBER: BT-016	FILE PATH: C:\Users\awebb\Dropbox\BT-027\BV WORKING\GIW Enhancements (Option 4)\Construction Drawings\Alternative Heat Extraction\GIW-4 AsBuilt.dwg		REVISION	DATE

Attachment No. 2 (Heat Extraction - Details)

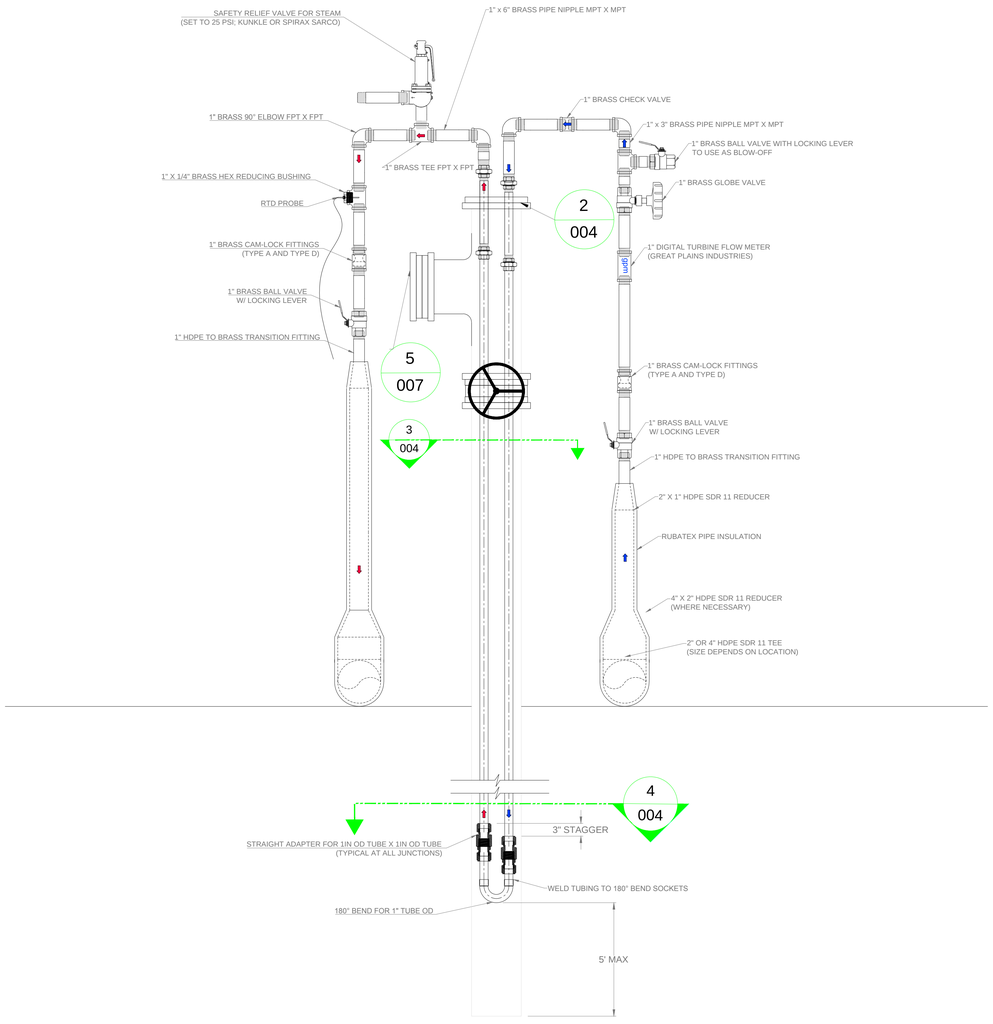

1 003 GIW WELL (RETROFIT FOR ALTERNATIVE HEAT EXTRACTION)
NTS

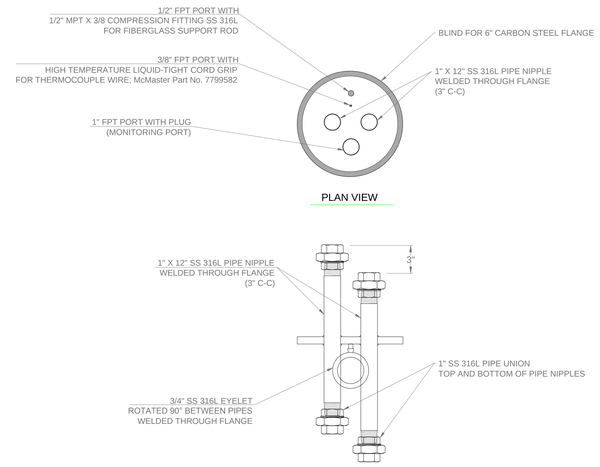

2 004 GIW WELL (RETROFIT FOR ALTERNATIVE HEAT EXTRACTION - TYPICAL) FLANGE COMPONENTS
NTS

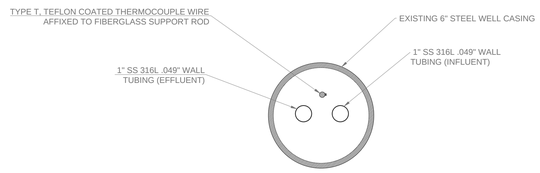

3 004 GIW WELL (RETROFIT FOR ALTERNATIVE HEAT EXTRACTION - TYPICAL) CROSS SECTION
NTS

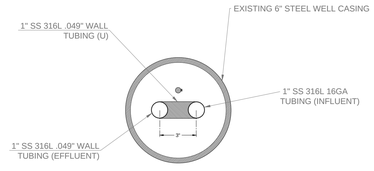

4 004 GIW WELL (RETROFIT FOR ALTERNATIVE HEAT EXTRACTION - TYPICAL) CROSS SECTION
NTS

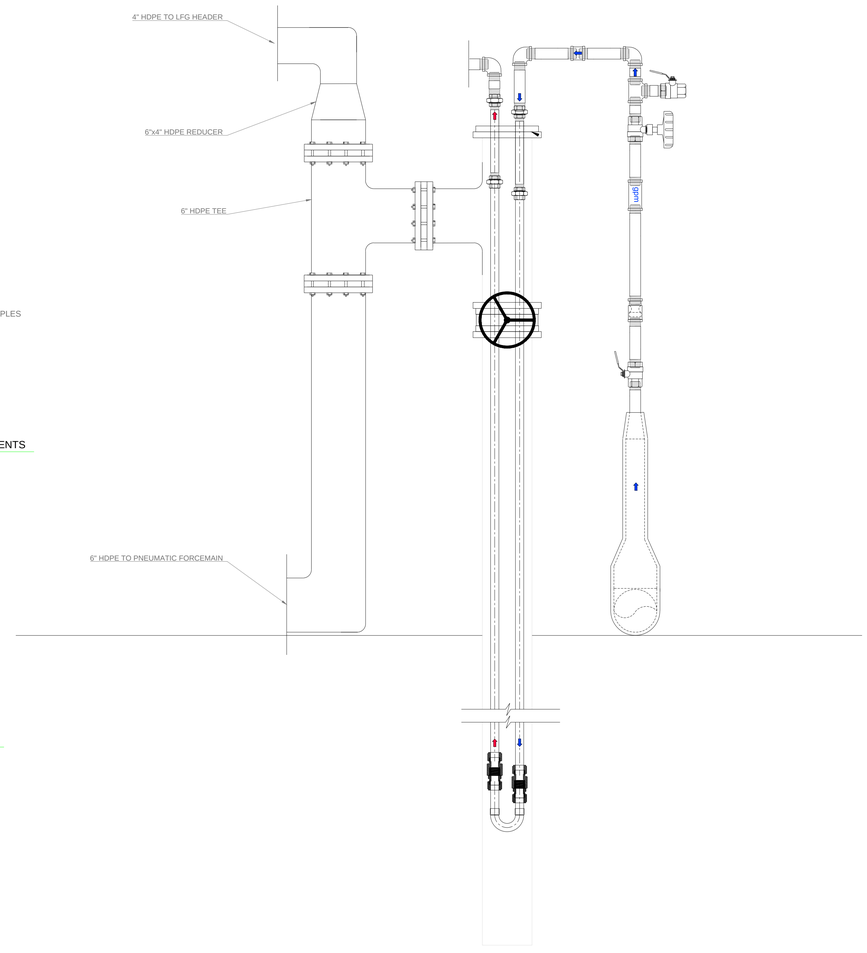

5 007 GIW WELL (RETROFIT FOR ALTERNATIVE HEAT EXTRACTION)
NTS

BRIDGETON LANDFILL, LLC 13570 ST. CHARLES ROCK ROAD BRIDGETON, MISSOURI 63044	BRIDGETON LANDFILL ALTERNATIVE HEAT EXTRACTION CONSTRUCTION DRAWINGS	Engineering for a Better World FEEZOR ENGINEERING, INC.	JULY 2014 DESIGNED BY: BJV APPROVED BY: ALK	DRAWING NO.: 007
HEAT EXTRACTION POINT - DETAILS				
PROJECT NUMBER: BT-027	FILE PATH: C:\Users\steve\bet\64\Dropbox\BT-027\BV WORKING\GBR Enhancements (Option 4)\Construction Drawings\Alternative Heat Extraction\BT-027-CD-007 (Details).dwg		REVISION / DATE	

Attachment No. 3 (Pump Data Sheet)

Rain for Rent

Model HH-80 Electric

Size 3” X 3”

Standard Features

- Hot Dip Galvanized Open Skids
- Fork Lift tubes
- Four corner bolt down angles
- Skid mounted with optional lifting bale
- Locking control panel
- Nu-T-Link compressor drive belt to allow easy belt replacement

Pump Features

- Solids handling capabilities to 1” diameter maximum
- Continuous self priming
- Runs dry unattended
- Suction lift to 28’ ft.
- Auto-start-capable control panel
- Stainless Steel, CD4MCu and Chrome pump Options

Technical

- Coupled to a 40hp 60Hz TEFC hostile duty dual voltage (230/460V) motor
- 460 volt control panel equipped with motor protection
- UL Type 3L Control panel designed for outdoor duty
- Panel equipped with Terminal Blocks for 2 remote float switches (Low off, High on)
- 480/240V-120V control transformer with protective fuses
- Compressor/Venturi automatic priming system

Material Specifications

- Standard Build – Ductile Iron volute, 316 Stainless Steel open impeller and replaceable wear plates
- Pump Shaft
  431 Stainless Steel
- Mechanical Seal
  Solid silicon carbide mating faces
  Oil-bath lubrication for dry running
- Suction / discharge flanges ANSI 150# FF.

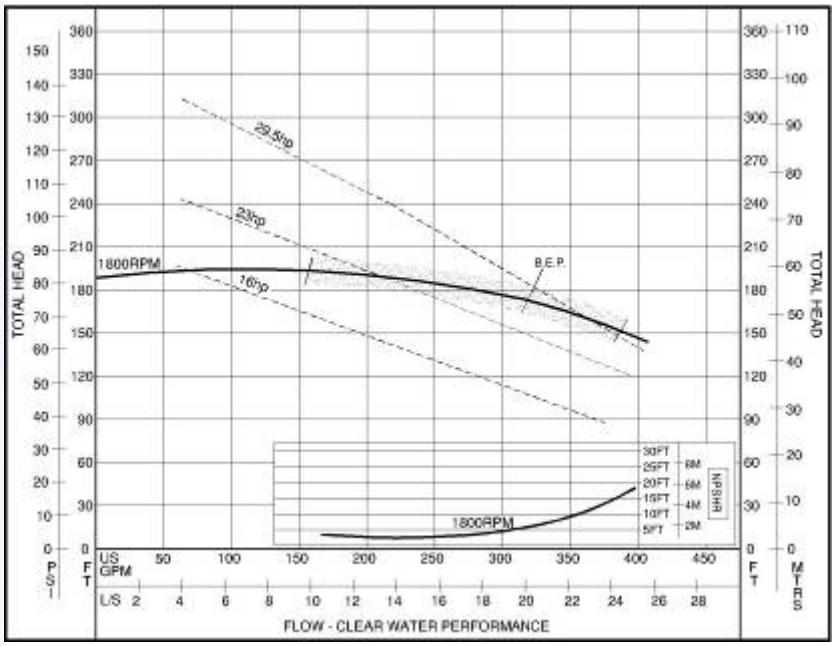

Rain for Rent
P.O. Box 2248
Bakersfield CA 93303
800-742-7246
661-393-1542
FAX 661-393-1542
www.rainforrent.com
info@rainforrent.com

Rain for Rent is a registered trademark of Western Oilfields Supply Company. Features and Specifications are subject to change without notice.

Rain for Rent

HH-80-E Technical Specifications

Production Curve

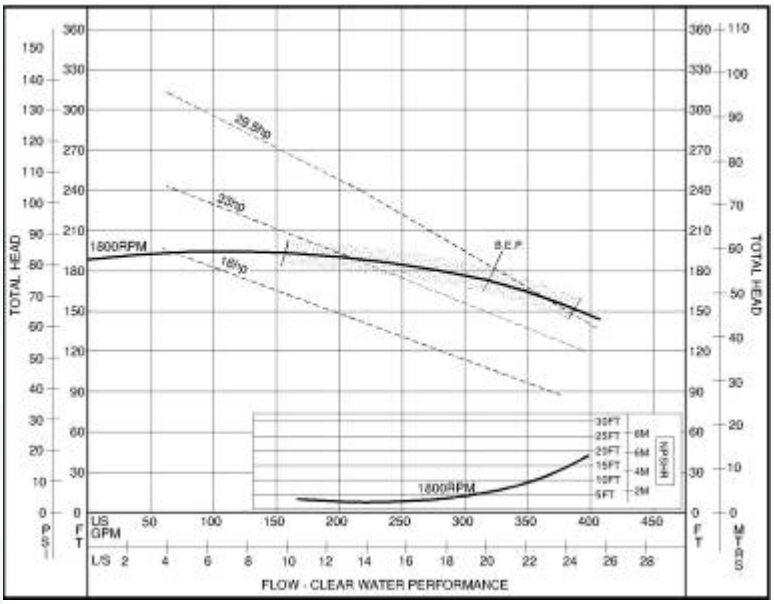

Performance Specs

STANDARD 3 VANE IMPELLER	
Maximum Operating Speed:	1760 rpm
Maximum Head:	180 ft.
Maximum Flow:	380 gpm

Design Details

Pump Designation:	HH-80
Pump Description:	Centrifugal end suction pump, single stage, volute type, 3 vane fully open impeller
Solid Handling Size:	1 inch (25mm)
Operating Temperature	MIN: -4ºF (-20ºC) MAX: +212ºF (+100ºC)

Dimensions

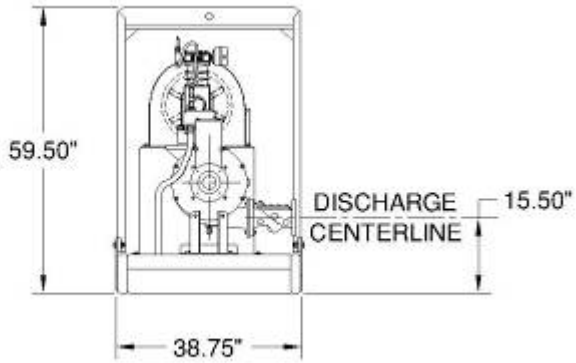

END VIEW

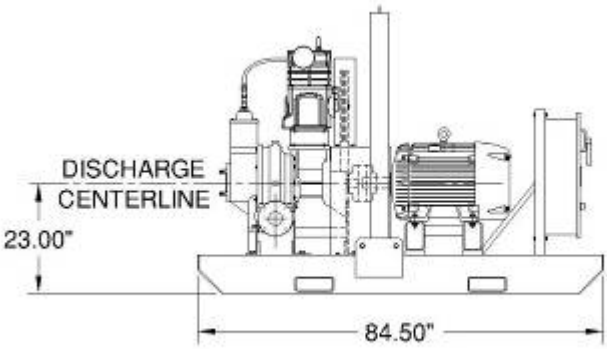

SIDE VIEW

Rain for Rent
P.O. Box 2248
Bakersfield CA 93303
800-742-7246
661-399-9124
FAX 661-393-1542
www.rainforrent.com
info@rainforrent.com

Rain for Rent is a registered trademark of Western Oilfields Supply Company. Features and Specifications are subject to change without notice.

Power Prime pumps

CURVE: 305008 4/05

PUMP: HH-80 ELECT.
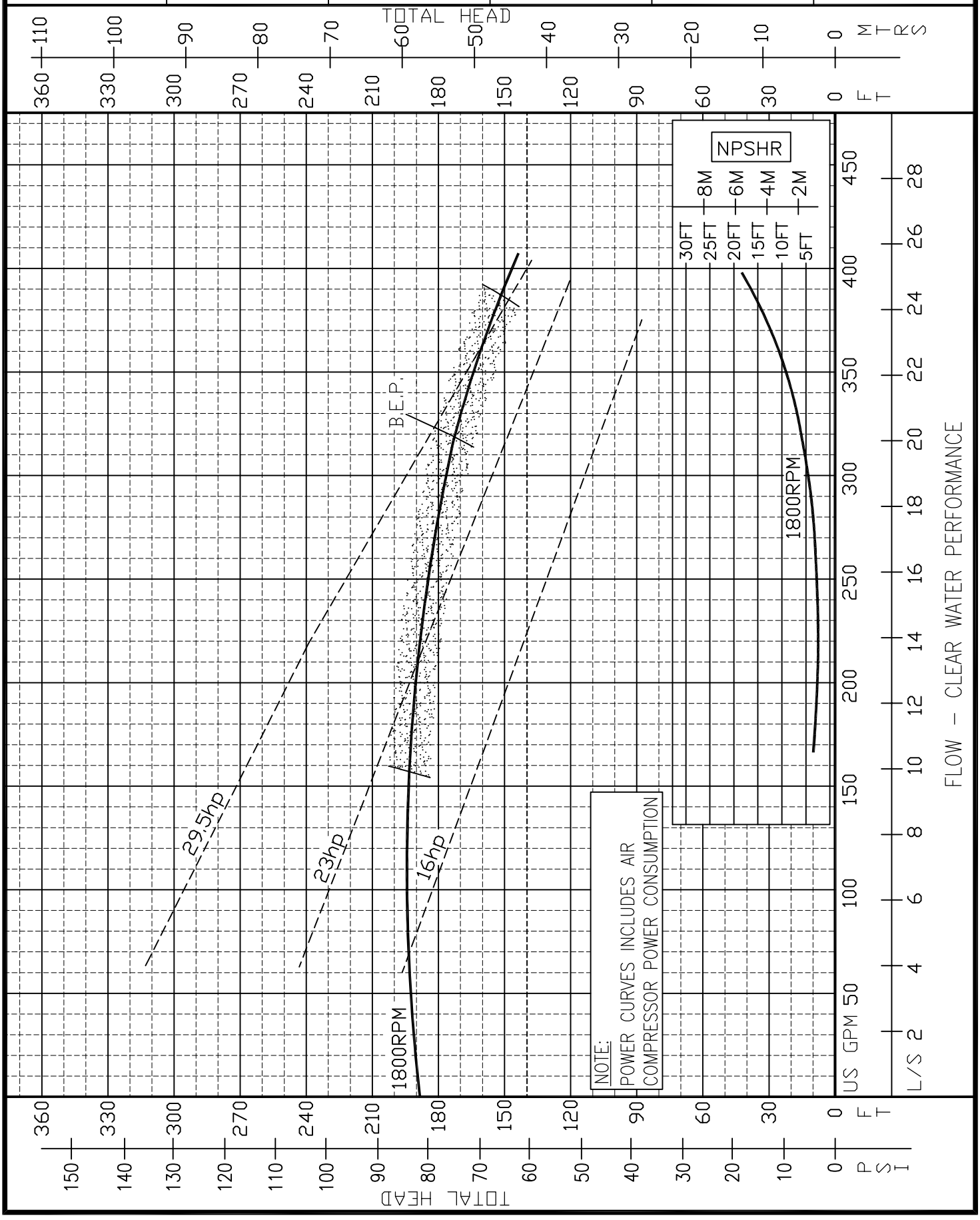
SUCTION	DISCHARGE	MAX. SPHERE	IMPELLER	IMPELLER	IMPELLER & WEAR PLATES
75mm (3")	75mm (3")	25mm (1.0")	3 VANE	ø325mm (12.8")	316 S/S