STATE OF MISSOURI

# DEPARTMENT OF NATURAL RESOURCES

MISSOURI CLEAN WATER COMMISSION

# MISSOURI STATE OPERATING PERMIT

In compliance with the Missouri Clean Water Law, (Chapter 644 R.S. Mo. as amended, hereinafter, the Law), and the Federal Water Pollution Control Act (Public Law 92-500, 92nd Congress) as amended,

| | |
|---|---|
| Permit No. | MO-0094161 |
| Owner: | City of Waynesville |
| Address: | 601 Historic 66 West, Waynesville, MO 65583 |
| Continuing Authority: | Same as above |
| Address: | Same as above |
| Facility Name: | Waynesville Wastewater Treatment Facility |
| Facility Address: | 405 Pine Street, Waynesville, MO 65583 |
| Legal Description: | See Page 2 |
| UTM Coordinates: | See Page 2 |
| Receiving Stream: | See Page 2 |
| First Classified Stream and ID: | See Page 2 |
| USGS Basin & Sub-watershed No.: | See Page 2 |

is authorized to discharge from the facility described herein, in accordance with the effluent limitations and monitoring requirements as set forth herein:

## FACILITY DESCRIPTION

Outfall #001 – POTW – SIC #4952

See Page 2

This permit authorizes only wastewater and stormwater discharges under the Missouri Clean Water Law and the National Pollutant Discharge Elimination System; it does not apply to other regulated areas. This permit may be appealed in accordance with Section 621.250 RSMo, Section 640.013 RSMo and Section 644.051.6 of the Law.

June 1, 2016 — Effective Date

January 13, 2017 — Modification Date

Todd Sampsell, Acting Director, Department of Natural Resources

June 30, 2020 — Expiration Date

David J. Lamb, Acting Director, Water Protection Program

**FACILITY DESCRIPTION (continued):**

Outfall #001 – POTW – SIC #4952
The use or operation of this facility shall be by or under the supervision of a Certified "B" Operator.
Screening / grit removal / screw pumps / oxidation ditch / flow equalization basin / UV disinfection / aerobic sludge digestion / sludge is land applied.
Design population equivalent is 12,500.
Design flow is 1.25 MGD.
Actual flow is 724,000 gallons per day.
Design sludge production is 250 dry tons/year.

| | |
|---|---|
| Legal Description: | SW ¼, NE ¼, Sec. 24, T36N, R12W, Pulaski County |
| UTM Coordinates: | X= 570641, Y= 4187897 |
| Receiving Stream and ID: | Roubidoux Creek (P) (1512) |
| First Classified Stream and ID: | Roubidoux Creek (P) (1512) |
| USGS Basin & Sub-watershed No.: | (10290201-0507) |

Outfall #002 – POTW – SIC #4952
This is an elevated outfall that temporarily discharges treated effluent when Roubidoux Creek rises. When the creek rises to a certain level, Outfall #001 is closed off to prevent flooding of the facility. Discharges from this outfall receive full treatment.

| | |
|---|---|
| Legal Description: | SW ¼, NE ¼, Sec. 24, T36N, R12W, Pulaski County |
| UTM Coordinates: | X= 570558, Y= 4187787 |
| Receiving Stream: | Roubidoux Creek (P) (1512) |
| First Classified Stream and ID: | Roubidoux Creek (P) (1512) |
| USGS Basin & Sub-watershed No.: | (10290201-0507) |

Permitted Feature #SM1 – Instream Monitoring
Instream monitoring location – Upstream – See Special Condition #20

Permitted Feature #SM2 – Instream Monitoring
Instream monitoring location – Downstream – where Roubidoux Creek reaches Missouri Route 17

| | |
|---|---|
| Legal Description: | SE ¼, NE ¼, Sec. 24, T36N, R12W, Pulaski County |
| UTM Coordinates: | X= 570842, Y= 4188076 |
| Receiving Stream: | Roubidoux Creek (P) (1512) |
| First Classified Stream and ID: | Roubidoux Creek (P) (1512) |
| USGS Basin & Sub-watershed No.: | (10290201-0507) |

| OUTFALLS #001 and #002 | TABLE A-1<br>FINAL EFFLUENT LIMITATIONS AND MONITORING REQUIREMENTS |
|---|---|

The permittee is authorized to discharge from outfall(s) with serial number(s) as specified in the application for this permit. The final effluent limitations shall become effective on **June 1, 2016** and remain in effect until expiration of the permit. Such discharges shall be controlled, limited and monitored by the permittee as specified below:

| EFFLUENT PARAMETER(S) | UNITS | FINAL EFFLUENT LIMITATIONS | | | MONITORING REQUIREMENTS | |
|---|---|---|---|---|---|---|
| | | DAILY MAXIMUM | WEEKLY AVERAGE | MONTHLY AVERAGE | MEASUREMENT FREQUENCY | SAMPLE TYPE |
| Flow | MGD | * | | * | once/weekday*** | 24 hr. total |
| Biochemical Oxygen Demand$_5$<br>(Apr 1 – Sep 30)<br>(Oct 1 – Mar 31) | mg/L | | 15<br>20 | 10<br>15 | once/week | composite** |
| Total Suspended Solids | mg/L | | 45 | 30 | once/week | composite** |
| *E. coli* (Note 1) | #/100mL | | 630 | 126 | once/week | grab |
| Ammonia as N<br>(Apr 1 – Sep 30)<br>(Oct 1 – Mar 31) | mg/L | 8.1<br>* | | 1.5<br>* | once/month | grab |
| MONITORING REPORTS SHALL BE SUBMITTED MONTHLY; THE FIRST REPORT IS DUE JULY 28, 2016. THERE SHALL BE NO DISCHARGE OF FLOATING SOLIDS OR VISIBLE FOAM IN OTHER THAN TRACE AMOUNTS. | | | | | | |
| Oil & Grease | mg/L | 15 | | 10 | once/quarter***** | grab |
| Copper, Total Recoverable | µg/L | * | | * | once/quarter***** | grab |
| Selenium, Total Recoverable | µg/L | * | | * | once/quarter***** | grab |
| Total Phosphorus | mg/L | * | | * | once/quarter***** | grab |
| Total Nitrogen | mg/L | * | | * | once/quarter***** | grab |
| MONITORING REPORTS SHALL BE SUBMITTED QUARTERLY; THE FIRST REPORT IS DUE OCTOBER 28, 2016. | | | | | | |
| EFFLUENT PARAMETER(S) | UNITS | MINIMUM | | MAXIMUM | MEASUREMENT FREQUENCY | SAMPLE TYPE |
| pH – Units **** | SU | 6.0 | | 9.0 | once/month | grab |
| MONITORING REPORTS SHALL BE SUBMITTED MONTHLY; THE FIRST REPORT IS DUE JULY 28, 2016. | | | | | | |

* Monitoring requirement only.
** A 24-hour composite sample is composed of 48 aliquots (subsamples) collected at 30 minute intervals by an automatic sampling device.
*** Once each weekday means: Monday, Tuesday, Wednesday, Thursday, and Friday.
**** pH is measured in pH units and is not to be averaged.
***** See table on Page 4 for quarterly sampling requirements.

Note 1 - Effluent limitations and monitoring requirements for *E. coli* are applicable only during the recreational season from April 1 through October 31. The Monthly Average Limit for *E. coli* is expressed as a geometric mean. The Weekly Average for *E. coli* will be expressed as a geometric mean if more than one (1) sample is collected during a calendar week (Sunday through Saturday).

| Minimum Sampling Requirements | | | |
|---|---|---|---|
| **Quarter** | **Months** | **Oil & Grease, Copper, Selenium, Total Phosphorus, and Total Nitrogen** | **Report is Due** |
| First | January, February, March | Sample at least once during any month of the quarter | April 28th |
| Second | April, May, June | Sample at least once during any month of the quarter | July 28th |
| Third | July, August, September | Sample at least once during any month of the quarter | October 28th |
| Fourth | October, November, December | Sample at least once during any month of the quarter | January 28th |

| **OUTFALL #001** | **TABLE A-2<br>WHOLE EFFLUENT TOXICITY<br>FINAL EFFLUENT LIMITATIONS AND MONITORING REQUIREMENTS** | | | | | |
|---|---|---|---|---|---|---|
| The permittee is authorized to discharge from outfall(s) with serial number(s) as specified in the application for this permit. The final effluent limitations shall become effective on **June 1, 2016** and remain in effect until expiration of the permit. Such discharges shall be controlled, limited and monitored by the permittee as specified below: | | | | | | |
| EFFLUENT PARAMETER(S) | UNITS | **FINAL EFFLUENT LIMITATIONS** | | | MONITORING REQUIREMENTS | |
| | | DAILY MAXIMUM | WEEKLY AVERAGE | MONTHLY AVERAGE | MEASUREMENT FREQUENCY | SAMPLE TYPE |
| Acute Whole Effluent Toxicity (Note 2) | $TU_a$ | * | | | once/year | composite** |
| MONITORING REPORTS SHALL BE SUBMITTED ANNUALLY; THE FIRST REPORT IS DUE FEBRUARY 28, 2017. | | | | | | |
| Chronic Whole Effluent Toxicity (Note 3) | $TU_c$ | * | | | once/permit cycle | composite** |
| WET TEST REPORTS SHALL BE SUBMITTED ONCE PER PERMIT CYCLE; THE FIRST REPORT IS DUE FEBRUARY 28, 2019. | | | | | | |

| **TABLE B<br>INFLUENT MONITORING REQUIREMENTS** | | | |
|---|---|---|---|
| The facility is required to meet a removal efficiency of 85% or more as a monthly average. The monitoring requirements shall become effective on **June 1, 2016** and remain in effect until expiration of the permit. To determine removal efficiencies, the influent wastewater shall be monitored by the permittee as specified below: | | | |
| SAMPLING LOCATION AND PARAMETER(S) | UNITS | MONITORING REQUIREMENTS | |
| | | MEASUREMENT FREQUENCY | SAMPLE TYPE |
| Biochemical Oxygen $Demand_5$ | mg/L | once/month | composite** |
| Total Suspended Solids | mg/L | once/month | composite** |
| MONITORING REPORTS SHALL BE SUBMITTED MONTHLY; THE FIRST REPORT IS DUE JULY 28, 2016. | | | |

* Monitoring requirement only.
** A 24-hour composite sample is composed of 48 aliquots (subsamples) collected at 30 minute intervals by an automatic sampling device.

Note 2 – The Acute WET test shall be conducted once per year during the 1st, 2nd, and 4th year of the permit cycle. See Special Condition #21 for additional requirements.

Note 3 –The Chronic WET test shall be conducted during the 3rd year of the permit cycle. See Special Condition #22 for additional requirements.

| PERMITTED FEATURE #SM1 | TABLE C-1 INSTREAM MONITORING REQUIREMENTS | | | | | |
|---|---|---|---|---|---|---|
| The monitoring requirements shall become effective on **June 1, 2016** and remain in effect until expiration of the permit. | | | | | | |
| PARAMETER(S) | UNITS | MONITORING REQUIREMENTS | | | | |
| | | DAILY MAXIMUM | | MONTHLY AVERAGE | MEASUREMENT FREQUENCY | SAMPLE TYPE |
| Total Phosphorus | mg/L | * | | * | once/quarter***** | grab |
| Total Nitrogen | mg/L | * | | * | once/quarter***** | grab |
| MONITORING REPORTS SHALL BE SUBMITTED QUARTERLY; THE FIRST REPORT IS DUE OCTOBER 28, 2016. | | | | | | |

| PERMITTED FEATURE #SM2 | TABLE C-2 INSTREAM MONITORING REQUIREMENTS | | | | | |
|---|---|---|---|---|---|---|
| The monitoring requirements shall become effective on **June 1, 2016** and remain in effect until expiration of the permit. | | | | | | |
| PARAMETER(S) | UNITS | MONITORING REQUIREMENTS | | | | |
| | | DAILY MAXIMUM | | MONTHLY AVERAGE | MEASUREMENT FREQUENCY | SAMPLE TYPE |
| Hardness, Total | mg/L | * | | * | once/quarter***** | grab |
| MONITORING REPORTS SHALL BE SUBMITTED QUARTERLY; THE FIRST REPORT IS DUE OCTOBER 28, 2016. | | | | | | |

* Monitoring requirement only.
***** See table below for quarterly sampling

| Minimum Sampling Requirements | | | |
|---|---|---|---|
| **Quarter** | **Months** | **Total Nitrogen, Total Phosphorus, and Hardness** | **Report is Due** |
| First | January, February, March | Sample at least once during any month of the quarter | April 28th |
| Second | April, May, June | Sample at least once during any month of the quarter | July 28th |
| Third | July, August, September | Sample at least once during any month of the quarter | October 28th |
| Fourth | October, November, December | Sample at least once during any month of the quarter | January 28th |

## D. STANDARD CONDITIONS

In addition to specified conditions stated herein, this permit is subject to the attached Parts I, II, & III standard conditions dated August 1, 2014, May 1, 2013, and March 1, 2015, and hereby incorporated as though fully set forth herein.

E. SPECIAL CONDITIONS

1. This permit establishes final ammonia limitations based on Missouri's current Water Quality Standard. On August 22, 2013, the U.S. Environmental Protection Agency (EPA) published a notice in the Federal Register announcing of the final national recommended ambient water quality criteria for protection of aquatic life from the effects of ammonia in freshwater. The EPA's guidance, Final Aquatic Life Ambient Water Quality Criteria for Ammonia – Fresh Water 2013, is not a rule, nor automatically part of a state's water quality standards. States must adopt new ammonia criteria consistent with EPA's published ammonia criteria into their water quality standards that protect the designated uses of the water bodies. The Department of Natural Resources has initiated stakeholder discussions on how to best incorporate these new criteria into the State's rules. A date for when this rule change will occur has not been determined. Also, refer to Section VI of this permit's factsheet for further information including estimated future effluent limits for this facility. It is recommended the permittee view the Department's 2013 EPA criteria Factsheet located at http://dnr.mo.gov/pubs/pub2481.htm.

2. This permit may be reopened and modified, or alternatively revoked and reissued, to:
   (a) Comply with any applicable effluent standard or limitation issued or approved under Sections 301(b)(2)(C) and (D), 304(b)(2), and 307(a) (2) of the Clean Water Act, if the effluent standard or limitation so issued or approved:
      (1) contains different conditions or is otherwise more stringent than any effluent limitation in the permit; or
      (2) controls any pollutant not limited in the permit.
   (b) Incorporate new or modified effluent limitations or other conditions, if the result of a waste load allocation study, toxicity test or other information indicates changes are necessary to assure compliance with Missouri's Water Quality Standards.
   (c) Incorporate new or modified effluent limitations or other conditions if, as the result of a watershed analysis, a Total Maximum Daily Load (TMDL) limitation is developed for the receiving waters which are currently included in Missouri's list of waters of the state not fully achieving the state's water quality standards, also called the 303(d) list.
   (d) Incorporate the requirement to develop a pretreatment program pursuant to 40 CFR 403.8(a) when the Director of the Water Protection Program determines that a pretreatment program is necessary due to any new introduction of pollutants into the Publically Owned Treatment Works or any substantial change in the volume or character of pollutants being introduced.

   The permit as modified or reissued under this paragraph shall also contain any other requirements of the Clean Water Act then applicable.

3. All outfalls must be clearly marked in the field. This does not include instream monitoring locations.

4. Permittee will cease discharge by connection to a facility with an area-wide management plan per 10 CSR 20-6.010(3)(B) within 90 days of notice of its availability.

5. Report as no-discharge when a discharge does not occur during the report period. For instream samples, report as "no flow" if no stream flow occurs during the report period.

6. Water Quality Standards
   (a) To the extent required by law, discharges to waters of the state shall not cause a violation of water quality standards rule under 10 CSR 20-7.031, including both specific and general criteria.
   (b) General Criteria. The following general water quality criteria shall be applicable to all waters of the state at all times including mixing zones. No water contaminant, by itself or in combination with other substances, shall prevent the waters of the state from meeting the following conditions:
      (1) Waters shall be free from substances in sufficient amounts to cause the formation of putrescent, unsightly or harmful bottom deposits or prevent full maintenance of beneficial uses;
      (2) Waters shall be free from oil, scum and floating debris in sufficient amounts to be unsightly or prevent full maintenance of beneficial uses;
      (3) Waters shall be free from substances in sufficient amounts to cause unsightly color or turbidity, offensive odor or prevent full maintenance of beneficial uses;
      (4) Waters shall be free from substances or conditions in sufficient amounts to result in toxicity to human, animal or aquatic life;
      (5) There shall be no significant human health hazard from incidental contact with the water;
      (6) There shall be no acute toxicity to livestock or wildlife watering;
      (7) Waters shall be free from physical, chemical or hydrologic changes that would impair the natural biological community;
      (8) Waters shall be free from used tires, car bodies, appliances, demolition debris, used vehicles or equipment and solid waste as defined in Missouri's Solid Waste Law, section 260.200, RSMo, except as the use of such materials is specifically permitted pursuant to section 260.200-260.247.

E. SPECIAL CONDITIONS (continued)

7. Changes in existing pollutants or the addition of new pollutants to the treatment facility

   The permittee must provide adequate notice to the Director of the following:
   (a) Any new introduction of pollutants into the POTW from an indirect discharger which would be subject to section 301 or 306 of CWA if it were directly discharging those pollutants; and
   (b) Any substantial change in the volume or character of pollutants being introduced into that POTW by a source introducing pollutants into the POTW at the time of issuance of the permit.
   (c) For purposes of this paragraph, adequate notice shall include information on;
      (1) the quality and quantity of effluent introduced into the POTW, and
      (2) any anticipated impact of the change on the quantity or quality of effluent to be discharged from the POTW.

8. Reporting of Non-Detects:
   (a) An analysis conducted by the permittee or their contracted laboratory shall be conducted in such a way that the precision and accuracy of the analyzed result can be enumerated.
   (b) The permittee shall not report a sample result as "Non-Detect" without also reporting the detection limit of the test. Reporting as "Non Detect" without also including the detection limit will be considered failure to report, which is a violation of this permit.
   (c) The permittee shall provide the "Non-Detect" sample result using the less than sign and the minimum detection limit (e.g. <10).
   (d) The permittee shall use one-half of the detection limit for the non-detect result when calculating monthly averages.
   (e) See Standard Conditions Part I, Section A, #4 regarding proper detection limits used for sample analysis.

9. It is a violation of the Missouri Clean Water Law to fail to pay fees associated with this permit (644.055 RSMo).

10. The permittee shall comply with any applicable requirements listed in 10 CSR 20-9, unless the facility has received written notification that the Department has approved a modification to the requirements. The monitoring frequencies contained in this permit shall not be construed by the permittee as a modification of the monitoring frequencies listed in 10 CSR 20-9. If a modification of the monitoring frequencies listed in 10 CSR 20-9 is needed, the permittee shall submit a written request to the Department for review and, if deemed necessary, approval.

11. The permittee shall develop and implement a program for maintenance and repair of the collection system. The recommended guidance is the US EPA's Guide For Evaluating Capacity, Management, Operation, And Maintenance (CMOM) Programs At Sanitary Sewer Collection Systems (Document number EPA 305-B-05-002) or the Departments' CMOM Model located at http://dnr.mo.gov/env/wpp/permits/docs/cmom-template.doc . For additional information regarding the Departments' CMOM Model, see the CMOM Plan Model Guidance document at http://dnr.mo.gov/pubs/pub2574.htm .

    The permittee shall also submit a report to the Southeast Regional Office annually, by January 28th, for the previous calendar year. The report shall contain the following information:
    (a) A summary of the efforts to locate and eliminate sources of excessive infiltration and inflow into the collection system serving the facility for the previous year.
    (b) A summary of the general maintenance and repairs to the collection system serving the facility for the previous year.
    (c) A summary of any planned maintenance and repairs to the collection system serving the facility for the upcoming calendar year. This list shall include locations (GPS, 911 address, manhole number, etc.) and actions to be taken.

12. Bypasses are not authorized at this facility unless they meet the criteria in 40 CFR 122.41(m). If a bypass occurs, the permittee shall report in accordance to 40 CFR 122.41(m)(3), and with Standard Condition Part I, Section B, subsection 2.b. Bypasses are to be reported to the Southeast Regional Office or by using the online Sanitary Sewer Overflow/Facility Bypass Application, located at: http://dnr.mo.gov/modnrcag/ during normal business hours or the Environmental Emergency Response hotline at 573-634-2436 outside of normal business hours. Blending, which is the practice of combining a partially-treated wastewater process stream with a fully-treated wastewater process stream prior to discharge, is not considered a form of bypass. If the permittee wishes to utilize blending, the permittee shall file an application to modify this permit to facilitate the inclusion of appropriate monitoring conditions.

13. The facility must be sufficiently secured to restrict entry by children, livestock and unauthorized persons as well as to protect the facility from vandalism.

14. At least one gate must be provided to access the wastewater treatment facility and provide for maintenance and mowing. The gate shall remain closed except when temporarily opened by; the permittee to access the facility, perform operational monitoring, sampling, maintenance, mowing, or for inspections by the Department. The gate shall be closed and locked when the facility is not staffed.

E. SPECIAL CONDITIONS (continued)

15. At least one (1) warning sign shall be placed on each side of the facility enclosure in such positions as to be clearly visible from all directions of approach. There shall also be one (1) sign placed for every five hundred feet (500') (150 m) of the perimeter fence. A sign shall also be placed on each gate. Minimum wording shall be SEWAGE TREATMENT FACILITY—KEEP OUT. Signs shall be made of durable materials with characters at least two inches (2") high and shall be securely fastened to the fence, equipment or other suitable locations.

16. An Operation and Maintenance (O & M) manual shall be maintained by the permittee and made available to the operator. The O & M manual shall include key operating procedures and a brief summary of the operation of the facility.

17. An all-weather access road shall be provided to the treatment facility.

18. The discharge from the wastewater treatment facility shall be conveyed to the receiving stream via a closed pipe or a paved or rip-rapped open channel. Sheet or meandering drainage is not acceptable. The outfall sewer shall be protected against the effects of floodwater, ice or other hazards as to reasonably insure its structural stability and freedom from stoppage. The outfall shall be maintained so that a sample of the effluent can be obtained at a point after the final treatment process and before the discharge mixes with the receiving waters.

19. Land application of biosolids shall be conducted in accordance with Standard Conditions III and a Department approved biosolids management plan. Land application of biosolids during frozen, snow covered, or saturated soil conditions in accordance with the additional requirements specified in WQ426 shall occur only with prior approval from the Department.

20. Receiving Water Monitoring Conditions:
    (a) Downstream receiving water samples should be taken at the location(s) specified on Page 2 of this permit. In the event that a safe, accessible location is not present at the location(s) listed, a suitable location can be negotiated with the Department. Samples should be taken at least four feet from the bank or from the middle of the stream (whichever is less) and 6-inches below the surface. The upstream receiving water sample should be collected at a point upstream from any influence of the effluent, where the water is visibly flowing down stream.
    (b) When conducting in-stream monitoring, the permittee shall record observations that include: the time of day, weather conditions, unusual stream characteristics (e.g., septic conditions, algae growth, etc.), the stream segment (e.g., riffle, pool or run) from where the sample was collected. These observations shall be submitted with the sample results.
    (c) Samples shall not be collected from areas with especially turbulent flow, still water or from the stream bank, unless these conditions are representative of the stream reach or no other areas are available for sample collection. Sampling should not be made when significant precipitation has occurred recently. The sampling event should be terminated and rescheduled if any of the following conditions occur:
        - If turbidity in the stream increases notably; or
        - If rainfall over the past two weeks exceeds 2.5 inches or exceeds 1 inch in the last 24 hours
    (d) Always use the correct sampling technique and handling procedure specified for the parameter of interest. Please refer to the latest edition of Standard Methods for the Examination of Water and Wastewater for further discussion of proper sampling techniques. All analyses must be conducted in accordance with an approved EPA method. Meters shall be calibrated immediately (within 1 hour) prior to the sampling event.
    (e) Please contact the Department if you need additional instructions or assistance.

E. SPECIAL CONDITIONS (continued)

21. Acute Whole Effluent Toxicity (WET) tests shall be conducted as follows:
    (a) Freshwater Species and Test Methods
        (1) Species and short-term test methods for estimating the acute toxicity of NPDES effluents are found in the most recent edition of *Methods for Measuring the Acute Toxicity of Effluents and Receiving Waters to Freshwater and Marine Organisms* (EPA/821/R-02/012; Table IA, 40 CFR Part 136). The permittee shall concurrently conduct 48-hour static non-renewal toxicity tests with the following species:
            - The fathead minnow, *Pimephales promelas* (Acute Toxicity Test Method 2000.0).
            - The daphnid, *Ceriodaphnia dubia* (Acute Toxicity Test Method 2002.0).
        (2) Chemical and physical analysis of an upstream control sample and effluent sample shall occur immediately upon being received by the laboratory, prior to any manipulation of the effluent sample beyond preservation methods consistent with federal guidelines for WET testing that are required to stabilize the sample during shipping. Where upstream receiving water is not available, synthetic laboratory control water may be used.
        (3) Test conditions must meet all test acceptability criteria required by the EPA Method used in the analysis.
        (4) Any and all chemical or physical analysis of the effluent sample performed in conjunction with the WET test shall be performed at the 100% Effluent concentration in addition to analysis performed upon any other effluent concentration.
        (5) The Allowable Effluent Concentration (AEC) for this facility is 99% with the dilution series being: 100%, 50%, 25%, 12.5%, and 6.25%.
        (6) All chemical analyses shall be performed and results shall be recorded in the appropriate field of the report form. The parameters for chemical analysis include Temperature (°C), pH (SU), Conductivity (µmohs/cm), Dissolved Oxygen (mg/L), Total Residual Chlorine (mg/L), Un-ionized Ammonia (mg/L), Total Alkalinity (mg/L), Total Recoverable Copper, Total Recoverable Selenium, and Total Hardness (mg/L).
    (b) Reporting of Acute Toxicity Monitoring Results
        (1) The facility must submit a full laboratory report for all toxicity testing. The report must include a quantification of acute toxic units ($TU_a = 100/LC_{50}$) reported according to the test methods manual chapter on report preparation and test review. The Lethal Concentration 50 Percent ($LC_{50}$) is the effluent concentration that would cause death in 50 percent of the test organisms at a specific time.

22. Chronic Whole Effluent Toxicity (WET) tests shall be conducted as follows:
    (a) Freshwater Species and Test Methods
        (1) Species and short-term test methods for estimating the chronic toxicity of NPDES effluents are found in the most recent edition of *Short-term Methods for Estimating the Chronic Toxicity of Effluents and Receiving Waters to Freshwater Organisms* (EPA/821/R-02/013; Table IA, 40 CFR Part 136). The permittee shall concurrently conduct 7-day, static, renewal toxicity tests with the following species:
            - The fathead minnow, *Pimephales promelas* (Survival and Growth Test Method 1000.0).
            - The daphnid, *Ceriodaphnia dubia* (Survival and Reproduction Test Method 1002.0).
        (2) Chemical and physical analysis of an upstream control sample and effluent sample shall occur immediately upon being received by the laboratory, prior to any manipulation of the effluent sample beyond preservation methods consistent with federal guidelines for WET testing that are required to stabilize the sample during shipping. Where upstream receiving water is not available, synthetic laboratory control water may be used.
        (3) Test conditions must meet all test acceptability criteria required by the EPA Method used in the analysis.
        (4) Any and all chemical or physical analysis of the effluent sample performed in conjunction with the WET test shall be performed at the 100% Effluent concentration in addition to analysis performed upon any other effluent concentration.
        (5) The Allowable Effluent Concentration (AEC) for this facility is 93% with the dilution series being: 100%, 50%, 25%, 12.5%, and 6.25%.
        (6) All chemical analyses shall be performed and results shall be recorded in the appropriate field of the report form. The parameters for chemical analysis include Temperature (°C), pH (SU), Conductivity (µmohs/cm), Dissolved Oxygen (mg/L), Total Residual Chlorine (mg/L), Un-ionized Ammonia (mg/L), Total Alkalinity (mg/L), Total Recoverable Copper, Total Recoverable Selenium, and Total Hardness (mg/L).
    (b) Reporting of Chronic Toxicity Monitoring Results
        (1) The facility must submit a full laboratory report for all toxicity testing. The report must include a quantification of chronic toxic units ($TU_c = 100/IC_{25}$) reported according to the *Methods for Measuring the Chronic Toxicity of Effluents and Receiving Waters to Freshwater and Marine Organisms* chapter on report preparation and test review. The 25 percent Inhibition Effect Concentration ($IC_{25}$) is the toxic or effluent concentration that would cause 25 percent reduction in mean young per female or in growth for the test populations.

E. SPECIAL CONDITIONS (continued)

23. Stormwater Pollution Prevention Plan (SWPPP):
A SWPPP must be developed and implemented within 180 days of the effective date of the permit. Through implementation of the SWPPP, the permittee shalt minimize the release of pollutants in stormwater from the facility to the waters of the state. The SWPPP shall be developed in consultation with the concepts and methods described in the following document: Developing Your Stormwater Pollution Prevention Plan, A Guide for Industrial Operators, (Document number EPA 833-B-09-002) published by the United States Environmental Protection Agency (USEPA) in February 2009.

(a) The SWPPP must identify any stormwater outfall from the facility and Best Management Practices (BMPs) used to prevent or reduce the discharge of contaminants in stormwater. The stormwater outfalls shall either be marked in the field or clearly marked on a map and maintained with the SWPPP.

(b) The SWPPP must include a schedule and procedures for a once per month routine site inspection.
   (1) The monthly routine inspection shall be documented in a brief written report, which shall include:
      i. The person(s) conducting the inspection.
      ii. The inspection date and time.
      iii. Weather information for the day of the inspection.
      iv. Precipitation information for the entire period since the last inspection.
      v. Description of the discharges observed, including visual quality of the discharges (sheen, turbid, etc.).
      vi. Condition of BMPs
      vii. If BMPs were replaced or repaired.
      viii. Observations and evaluations of BMP effectiveness.
   (2) Any deficiency observed during the routine inspection must be corrected within seven (7) days and the actions taken to correct the deficiencies shall be included with the written report.
   (3) The routine inspection reports must be kept onsite with the SWPPP and maintained for a period of five (5) years.
   (4) The routine inspection reports shall be made available to Department personnel upon request.

(c) The SWPPP must include a schedule and procedures for a once per year comprehensive site inspection.
   (1) The annual comprehensive inspection shall be documented in a written report, which shall include:
      i. The person(s) conducting the inspection.
      ii. The inspection date and time.
      iii. Findings from the areas of your facility that were examined;
      iv. All observations relating to the implementation of your control measures including:
         1. Previously unidentified discharges from the site,
         2. Previously unidentified pollutants in existing discharges,
         3. Evidence of, or the potential for, pollutants entering the drainage system;
         4. Evidence of pollutants discharging to receiving waters at all facility outfall(s), and the condition of and around the outfall, and
         5. Additional control measures needed to address any conditions requiring corrective action identified during the inspection.
      v. Any required revisions to the SWPPP resulting from the inspection;
      vi. Any incidence of noncompliance observed or a certification stating that the facility is in compliance with Special Conditions.
   (2) Any deficiency observed during the comprehensive inspection must be corrected within seven (7) days and the actions taken to correct the deficiencies shall be included with the written report.
   (3) The comprehensive inspection reports must be kept onsite with the SWPPP and maintained for a period of five (5) years.
   (4) The comprehensive inspection reports shall be made available to Department personnel upon request.

(d) The SWPPP must be kept on-site and should not be sent to the Department unless specifically requested.

(e) The SWPPP must be reviewed and updated at a minimum once per permit cycle, as site conditions or control measures change.

E. SPECIAL CONDITIONS (continued)

24. The permittee shall select, install, use, operate, and maintain the Best Management Practices prescribed in the SWPPP.
    (a) Permittee shall adhere to the following minimum Best Management Practices (BMPs):
        (1) Minimize the exposure of industrial material storage areas, loading and unloading areas, dumpsters and other disposal areas, maintenance activities, and fueling operations to rain, snow, snowmelt, and runoff, by locating industrial materials and activities inside or protecting them with storm resistant coverings, if warranted and practicable.
        (2) Provide good housekeeping practices on the site to prevent potential pollution sources from coming into contact with stormwater and provide collection facilities and arrange for proper disposal of waste products, including sludge.
        (3) Implement a maintenance program to ensure that the structural control measures and industrial equipment is kept in good operating condition and to prevent or minimize leaks and other releases of pollutants.
        (4) Prevent or minimize the spillage or leaks of fluids, oil, grease, fuel, etc. from equipment and vehicle maintenance, equipment and vehicle cleaning, or activities.
        (5) Provide sediment and erosion control sufficient to prevent or control sediment loss off of the property. This could include the use of straw bales, silt fences, or sediment basins, if needed.
        (6) Provide stormwater runoff controls to divert, infiltrate, reuse, contain, or otherwise minimize pollutants in the stormwater discharge.
        (7) Enclose or cover storage piles of salt or piles containing salt, used for deicing or other commercial or industrial purposes.
        (8) Provide training to all employees who; work in areas where industrial materials or activities are exposed to stormwater, are responsible for stormwater inspections, are members of the Pollution Prevention Team. Training must cover the specific control measures and monitoring, inspection, planning, reporting and documentation requirements of this permit. Training is recommended annually for any applicable staff and whenever a new employee is hired who meets the description above.
        (9) Eliminate and prevent unauthorized non-stormwater discharges at the facility.
        (10) Minimize generation of dust and off-site tracking of raw, final, or waste materials by implementing appropriate control measures.

25. Electronic Discharge Monitoring Report (eDMR) Submission System.
    (a) Discharge Monitoring Reporting Requirements. The permittee must electronically submit compliance monitoring data via the eDMR system. In regards to Standard Conditions Part I, Section B, #7, the eDMR system is currently the only Department approved reporting method for this permit.
    (b) Programmatic Reporting Requirements. The following reports (if required by this permit) must be electronically submitted as an attachment to the eDMR system until such a time when the current or a new system is available to allow direct input of the data:
        (1) Collection System Maintenance Annual Reports;
        (2) Schedule of Compliance Progress Reports;
        (3) Wastewater Irrigation Annual Reports;
        (4) Sludge/Biosolids Annual Reports; and
            i. In addition to the annual Sludge/Biosolids report submitted to the department, the permittee must submit Sludge/Biosolids Annual Reports electronically using EPA's NPDES Electronic Reporting Tool ("NeT") (https://cdx.epa.gov/).
        (5) Any additional report required by the permit excluding bypass reporting.

        After such a system has been made available by the department, required data shall be directly input into the system by the next report due date.
    (c) Other actions. The following shall be submitted electronically after such a system has been made available by the department:
        (1) General Permit Applications/Notices of Intent to discharge (NOIs);
        (2) Notices of Termination (NOTs);
        (3) No Exposure Certifications (NOEs);
        (4) Low Erosivity Waivers and Other Waivers from Stormwater Controls (LEWs); and
        (5) Bypass reporting, See Special Condition #12 for 24-hr. bypass reporting requirements.
    (d) Electronic Submissions. To access the eDMR system, use the following link in your web browser: https://edmr.dnr.mo.gov/edmr/E2/Shared/Pages/Main/Login.aspx.
    (e) Waivers from Electronic Reporting. The permittee must electronically submit compliance monitoring data and reports unless a waiver is granted by the department in compliance with 40 CFR Part 127. The permittee may obtain an electronic reporting waiver by first submitting an eDMR Waiver Request Form: http://dnr.mo.gov/forms/780-2692-f.pdf. The department will either approve or deny this electronic reporting waiver request within 120 calendar days. Only permittees with an approved waiver request may submit monitoring data and reports on paper to the Department for the period that the approved electronic reporting waiver is effective.

**MISSOURI DEPARTMENT OF NATURAL RESOURCES**
**eDMR STATEMENT OF BASIS**
**MO-0094161**
**WAYNESVILLE WASTEWATER TREATMENT FACILITY**

This Statement of Basis gives pertinent information regarding an internal minor permit modification to the above listed operating permit without the need for a public comment process. A statement of basis is not an enforceable part of a Missouri State Operating Permit.

## Part I – Facility Information

Facility Type: POTW
Facility SIC Code(s): #4952
Facility Description: Screening / grit removal / screw pumps / oxidation ditch / flow equalization basin / UV disinfection / aerobic sludge digestion / sludge is land applied.

## Part II – Modification Rationale

This operating permit was modified by adding a special condition to the permit to require the permittee to submit all discharge monitoring reports electronically (eDMR) to the department. The final rule (eReporting Rule) substitutes electronic reporting for paper-based reports and, over the long term, saves time and resources for permittees, states, tribes, territories, and EPA, while improving compliance and better protecting the Nation's waters. The final rule requires permittees and regulators to use existing, available information technology to electronically report information and data related to the NPDES permit program in lieu of filing paper-based reports. All authorized programs are required to electronically transmit the federally-required data (identified in appendix A to 40 CFR part 127) to EPA. The purpose and need for this rule was highlighted in the development of the Clean Water Act Enforcement Action Plan (Plan).

Announced by EPA in October 2009, the Plan was a collaborative effort by EPA and state environmental agencies to explore opportunities to improve water quality by emphasizing and adopting new approaches that will improve how the NPDES permitting and enforcement program is administered. The goals of the Plan include improving transparency of the information on compliance and enforcement activities in each state, connecting this information to local water quality, and providing the public with real-time, easy access to this information.

No other changes were made at this time to this permit.

## Part III –Administrative Requirements

On the basis of preliminary staff review and the application of applicable standards and regulations, the Department, as administrative agent for the Missouri Clean Water Commission, proposes to issue a permit(s) subject to certain effluent limitations, schedules, and special conditions contained herein and within the operating permit.

**DATE OF STATEMENT OF BASIS**: JANUARY 4, 2017

**COMPLETED BY:**

**ANGELA FALLS, ENVIRONMENTAL SPECIALIST**
**MISSOURI DEPARTMENT OF NATURAL RESOURCES**
**WATER PROTECTION PROGRAM**
**INDUSTRIAL UNIT**
**(573) 751-1419**
**angela.falls@dnr.mo.gov**

# MISSOURI DEPARTMENT OF NATURAL RESOURCES
# FACT SHEET
# FOR THE PURPOSE OF RENEWAL
# OF
# MO-0094161
# WAYNESVILLE WASTEWATER TREATMENT FACILITY

The Federal Water Pollution Control Act ("Clean Water Act" Section 402 Public Law 92-500 as amended) established the National Pollution Discharge Elimination System (NPDES) permit program. This program regulates the discharge of pollutants from point sources into the waters of the United States, and the release of stormwater from certain point sources. All such discharges are unlawful without a permit (Section 301 of the "Clean Water Act"). After a permit is obtained, a discharge not in compliance with all permit terms and conditions is unlawful. Missouri State Operating Permits (MSOPs) are issued by the Director of the Missouri Department of Natural Resources (Department) under an approved program, operating in accordance with federal and state laws (Federal "Clean Water Act" and "Missouri Clean Water Law" Section 644 as amended). MSOPs are issued for a period of five (5) years unless otherwise specified.

As per [40 CFR Part 124.8(a)] and [10 CSR 20-6.020(1)2.] a Factsheet shall be prepared to give pertinent information regarding the applicable regulations, rationale for the development of effluent limitations and conditions, and the public participation process for the Missouri State Operating Permit (operating permit) listed below.

A Factsheet is not an enforceable part of an operating permit.

This Factsheet is for a Major.

## Part I – Facility Information

Facility Type: POTW - SIC #4952

Facility Description:
Screening / grit removal / screw pumps / oxidation ditch / flow equalization basin / UV disinfection / aerobic sludge digestion / sludge is land applied.

Outfall #002 is an elevated outfall that temporarily discharges treated effluent when Roubidoux Creek rises. When the creek rises to a certain level, Outfall #001 is closed off to prevent flooding of the facility. Discharges from this outfall receive full treatment.

Application Date: 06/01/15
Expiration Date: 02/16/16

**OUTFALL(S) TABLE:**

| OUTFALL | DESIGN FLOW (CFS) | TREATMENT LEVEL | EFFLUENT TYPE |
|---|---|---|---|
| #001 | 1.94 | Secondary | Domestic |

Facility Performance History:
This facility was last inspected on March 19, 2015. The conditions of the facility at the time of inspection were found to be satisfactory. A review of the past five years of monitoring reports submitted by the permittee shows the following exceedances: pH in June 2012 and November 2012; BOD in July 2011.

Comments:
Changes in this permit include the addition of ammonia limits, phosphorus and nitrogen monitoring upstream and in the effluent, hardness monitoring downstream, and chronic WET testing. See Part VII of the Fact Sheet for further information regarding the addition and removal of effluent parameters. Special conditions were updated to include the addition of reporting of Non-detects requirements, bypass reporting requirements, instream monitoring requirements, chronic WET testing requirements, and SWPPP requirements.

## Part II – Operator Certification Requirements

As per [10 CSR 20-6.010(8) Terms and Conditions of a Permit], the permittee shall operate and maintain facilities to comply with the Missouri Clean Water Law and applicable permit conditions and regulations. Operators or supervisors of operations at regulated wastewater treatment facilities shall be certified in accordance with [10 CSR 20-9.020(2)] and any other applicable state law or regulation. As per [10 CSR 20-9.020(2)(A)], requirements for operation by certified personnel shall apply to all wastewater treatment systems, if applicable, as listed below:

Owned or operated by or for a

- ☒ - Municipalities
- ☐ - State agency
- ☐ - Federal agency
- ☐ - Public Sewer District
- ☐ - County
- ☐ - Public Water Supply Districts
- ☐ - Private Sewer Company regulated by the Public Service Commission
- ☐ - State agency
- ☐ - Federal agency

Each of the above entities are only applicable if they have a Population Equivalent greater than two hundred (200) or fifty (50) or more service connections.

This facility currently requires an operator with a B Certification Level. Please see **Appendix - Classification Worksheet**. Modifications made to the wastewater treatment facility may cause the classification to be modified.

Operator's Name: Terry Reeves
Certification Number: 8945
Certification Level: B

The listing of the operator above only signifies that staff drafting this operating permit have reviewed appropriate Department records and determined that the name listed on the operating permit application has the correct and applicable Certification Level.

## Part III– Operational Monitoring

☒ - As per [10 CSR 20-9.010(4))], the facility is required to conduct operational monitoring.

## Part IV – Receiving Stream Information

10 CSR 20-7.031 Missouri Water Quality Standards, the Department defines the Clean Water Commission water quality objectives in terms of "water uses to be maintained and the criteria to protect those uses." The receiving stream and/or 1st classified receiving stream's beneficial water uses to be maintained are located in the Receiving Stream Table located below in accordance with [10 CSR 20-7.031(4)].

**RECEIVING STREAM(S) TABLE:**

| WATER-BODY NAME | CLASS | WBID | DESIGNATED USES* | 12-DIGIT HUC | DISTANCE TO CLASSIFIED SEGMENT (MI) |
|---|---|---|---|---|---|
| Roubidoux Creek | P | 1512 | IRR, LWW, AQL, HHP, CDF, WBC-A, SCR | (10290201-0507) | Direct Discharge |

* - Irrigation (IRR), Livestock & Wildlife Watering (LWW), Protection of Warm Water Aquatic Life (AQL), Human Health Protection (HHP), Cool Water Fishery (CLF), Cold Water Fishery (CDF), Whole Body Contact Recreation – Category A (WBC-A), Whole Body Contact Recreation – Category B (WBC-B), Secondary Contact Recreation (SCR), Drinking Water Supply (DWS), Industrial (IND), Groundwater (GRW).

**RECEIVING STREAM(S) LOW-FLOW VALUES:**

| RECEIVING STREAM (C, E, P, P1) | LOW-FLOW VALUES (CFS)* | | |
|---|---|---|---|
| | 1Q10 | 7Q10 | 30Q10 |
| Roubidoux Creek (P) | 0.160 | 0.544 | 0.108 |

* - Data from USGS Gauge Station 06928430 located on Roubidoux Creek below Fort Leonard Wood.

**MIXING CONSIDERATIONS TABLE:**

| MIXING ZONE (CFS) [10 CSR 20-7.031(5)(A)4.B.(II)(a)] | | | ZONE OF INITIAL DILUTION (CFS) [10 CSR 20-7.031(5)(A)4.B.(II)(b)] | | |
|---|---|---|---|---|---|
| 1Q10 | 7Q10 | 30Q10 | 1Q10 | 7Q10 | 30Q10 |
| 0.040 | 0.136 | 0.027 | 0.0040 | 0.0136 | N/A |

**RECEIVING STREAM MONITORING REQUIREMENTS:**

**Permitted Feature #SM1** – Upstream – See Special Condition #20
Facilities with a design flow greater than 100,000 gallons per day are required to sample their effluent quarterly for Total Phosphorus and Total Nitrogen per 10 CSR 20-7.015(9)(D)7. Upstream monitoring for these parameters is necessary to determine background concentrations in order to complete calculations related to future effluent limit derivation where necessary or appropriate.

**Permitted Feature #SM2** – Downstream – See Page 2 of the permit
Downstream hardness monitoring has been added to the permit in order to develop a site-specific hardness for determining reasonable potential and calculating hardness-dependent metals limits.

## Part V – Rationale and Derivation of Effluent Limitations & Permit Conditions

**ALTERNATIVE EVALUATIONS FOR NEW FACILITIES:**
As per [10 CSR 20-7.015(4)(A)], discharges to losing streams shall be permitted only after other alternatives including land application, discharges to a gaining stream and connection to a regional wastewater treatment facility have been evaluated and determined to be unacceptable for environmental and/or economic reasons.

☒ - The facility does not discharge to a Losing Stream as defined by [10 CSR 20-2.010(36)] & [10 CSR 20-7.031(1)(N)], or is an existing facility.

**ANTI-BACKSLIDING:**
A provision in the Federal Regulations [CWA §303(d)(4); CWA §402(o); 40 CFR Part 122.44(l)] that requires a reissued permit to be as stringent as the previous permit with some exceptions. Limitations in this operating permit for the reissuance of this permit conform to the anti-backsliding provisions of Section 402(o) of the Clean Water Act, and 40 CFR Part 122.44.

☒ - Information is available which was not available at the time of permit issuance (other than revised regulations, guidance, or test methods) and which would have justified the application of a less stringent effluent limitation at the time of permit issuance.

- Statistical analysis was performed using the past five years of monitoring data submitted by the facility for copper and selenium. The analysis determined no reasonable potential for either of these pollutants to cause or contribute to an instream excursion of water quality standards. Because of this, effluent limits for copper and selenium have been removed and replaced with a monitoring only requirement.

☒ - The Department determines that technical mistakes or mistaken interpretations of law were made in issuing the permit under section 402(a)(1)(b).

- This permit changes WET test requirements for the facility from a pass/fail requirement to monitoring only for toxic units. This change reflects modifications to Missouri's Effluent Regulation found at 10 CSR 20-7.015. 40 CFR 122.44(d)(1)(ii) requires the Department to establish effluent limitations that control all parameters which have the reasonable potential to cause or contribute to an excursion above any state water quality standard, including state narrative criteria. The previous permit imposed a pass/fail limitation without collecting sufficient data to make a reasonable potential determination. Furthermore, the method of reporting associated with the pass/fail limitation prevented the Department from gathering the data necessary to make a finding of reasonable potential. Implementation of the toxic unit monitoring requirement will allow the Department to implement numeric acute criteria in accordance with water quality standards established under §303 of the CWA.

**ANTIDEGRADATION:**
In accordance with Missouri's Water Quality Standard [10 CSR 20-7.031(3)], the Department is to document by means of Antidegradation Review that the use of a water body's available assimilative capacity is justified. Degradation is justified by documenting the socio-economic importance of a discharging activity after determining the necessity of the discharge.

☒ - This permit contains new and/or expanded discharge, please see **APPENDIX FOR ANTIDEGRADATION ANALYSIS.**

**AREA-WIDE WASTE TREATMENT MANAGEMENT & CONTINUING AUTHORITY:**
As per [10 CSR 20-6.010(3)(B)], …An applicant may utilize a lower preference continuing authority by submitting, as part of the application, a statement waiving preferential status from each existing higher preference authority, providing the waiver does not conflict with any area-wide management plan approved under section 208 of the Federal Clean Water Act or any other regional sewage service and treatment plan approved for higher preference authority by the Department.

**BIOSOLIDS & SEWAGE SLUDGE:**
Biosolids are solid materials resulting from domestic wastewater treatment that meet federal and state criteria for beneficial uses (i.e. fertilizer). Sewage sludge is solids, semi-solids, or liquid residue generated during the treatment of domestic sewage in a treatment works; including but not limited to, domestic septage; scum or solids removed in primary, secondary, or advanced wastewater treatment process; and a material derived from sewage sludge. Sewage sludge does not include ash generated during the firing of sewage sludge in a sewage sludge incinerator or grit and screening generated during preliminary treatment of domestic sewage in a treatment works. Additional information regarding biosolids and sludge is located at the following web address: http://extension.missouri.edu/main/DisplayCategory.aspx?C=74, items WQ422 through WQ449.

☒ - Permittee land applies biosolids in accordance with Standard Conditions III and a Department approved biosolids management plan.

**COMPLIANCE AND ENFORCEMENT:**
Enforcement is the action taken by the Water Protection Program (WPP) to bring an entity into compliance with the Missouri Clean Water Law, its implementing regulations, and/or any terms and conditions of an operating permit. The primary purpose of the enforcement activity in the WPP is to resolve violations and return the entity to compliance.

☒ - The facility is not currently under Water Protection Program enforcement action.

**DISCHARGE MONITORING REPORTS:**
On July 30, 2013, EPA proposed the Clean Water Act National Pollutant Discharge Elimination System (NPDES) Electronic Reporting Rule, which requires electronic reporting of NPDES information rather than the currently-required paper-based reports from permitted facilities. To comply with the upcoming federal rule, the Department is asking all permittees to begin submitting discharge monitoring data online. For permittees already using the Department's eDMR data reporting system, those permittees will be required to exclusively use the eDMR data reporting system.

☒ - The permittee/facility is not currently using the eDMR data reporting system. To sign up for the eDMR system, visit the Department's eDMR page at http://dnr.mo.gov/env/wpp/edmr.htm.

**PRETREATMENT PROGRAM:**
The reduction of the amount of pollutants, the elimination of pollutants, or the alteration of the nature of pollutant properties in wastewater prior to or in lieu of discharging or otherwise introducing such pollutants into a Publicly Owned Treatment Works [40 CFR Part 403.3(q)].

Pretreatment programs are required at any POTW (or combination of POTW operated by the same authority) and/or municipality with a total design flow greater than 5.0 MGD and receiving industrial wastes that interfere with or pass through the treatment works or are otherwise subject to the pretreatment standards. Pretreatment programs can also be required at POTWs/municipals with a design flow less than 5.0 MGD if needed to prevent interference with operations or pass through.
Several special conditions pertaining to the permittee's pretreatment program may be included in the permit, and are as follows:

- Implementation and enforcement of the program,
- Annual pretreatment report submittal,
- Submittal of list of industrial users,
- Technical evaluation of need to establish local limitations, and
- Submittal of the results of the evaluation

☒ - The permittee, at this time, is not required to have a Pretreatment Program or does not have an approved pretreatment program.

**REASONABLE POTENTIAL ANALYSIS (RPA):**
Federal regulation [40 CFR Part 122.44(d)(1)(i)] requires effluent limitations for all pollutants that are or may be discharged at a level that will cause or have the reasonable potential to cause or contribute to an in-stream excursion above narrative or numeric water quality standard.

In accordance with [40 CFR Part 122.44(d)(1)(iii)] if the permit writer determines that any given pollutant has the reasonable potential to cause, or contribute to an in-stream excursion above the WQS, the permit must contain effluent limits for that pollutant.

☒ - A RPA was conducted on appropriate parameters. Please see **APPENDIX – RPA RESULTS.**

**REMOVAL EFFICIENCY:**
Removal efficiency is a method by which the Federal Regulations define Secondary Treatment and Equivalent to Secondary Treatment, which applies to Biochemical Oxygen Demand 5-day ($BOD_5$) and Total Suspended Solids (TSS) for Publicly Owned Treatment Works (POTWs)/municipals.

☒ - Secondary Treatment is 85% removal [40 CFR Part 133.102(a)(3) & (b)(3)].

**SANITARY SEWER OVERFLOWS (SSO) AND INFLOW AND INFILTRATION (I&I):**
Sanitary Sewer Overflows (SSOs) are defined as untreated sewage releases and are considered bypassing under state regulation [10 CSR 20-2.010(11)] and should not be confused with the federal definition of bypass. SSOs result from a variety of causes including blockages, line breaks, and sewer defects that can either allow wastewater to backup within the collection system during dry weather conditions or allow excess stormwater and groundwater to enter and overload the collection system during wet weather conditions. SSOs can also result from lapses in sewer system operation and maintenance, inadequate sewer design and construction, power failures, and vandalism. SSOs include overflows out of manholes, cleanouts, broken pipes, and other into waters of the state and onto city streets, sidewalks, and other terrestrial locations.

Inflow and Infiltration (I&I) is defined as unwanted intrusion of stormwater or groundwater into a collection system. This can occur from points of direct connection such as sump pumps, roof drain downspouts, foundation drains, and storm drain cross-connections or through cracks, holes, joint failures, faulty line connections, damaged manholes, and other openings in the collection system itself. I&I results from a variety of causes including line breaks, improperly sealed connections, cracks caused by soil erosion/settling, penetration of vegetative roots, and other sewer defects. In addition, excess stormwater and groundwater entering the collection system from line breaks and sewer defects have the potential to negatively impact the treatment facility.

Missouri RSMo §644.026.1.(13) mandates that the Department issue permits for discharges of water contaminants into the waters of this state, and also for the operation of sewer systems. Such permit conditions shall ensure compliance with all requirements as established by sections 644.006 to 644.141. Standard Conditions Part I, referenced in the permit, contains provisions requiring proper operation and maintenance of all facilities and systems of treatment and control. Missouri RSMo §644.026.1.(15) instructs the Department to require proper maintenance and operation of treatment facilities and sewer systems and proper disposal of residual waste from all such facilities. To ensure that public health and the environment are protected, any noncompliance which may endanger public health or the environment must be reported to the Department within 24 hours of the time the permittee becomes aware of the noncompliance. Standard Conditions Part I, referenced in the permit, contains the reporting requirements for the permittee when bypasses and upsets occur. The permit also contains requirements for permittees to develop and implement a program for maintenance and repair of the collection system. The permit requires that the permittee submit an annual report to the Department for the previous calendar year that contains a summary of efforts taken by the permittee to locate and eliminate sources of excess I & I, a summary of general maintenance and repairs to the collection system, and a summary of any planned maintenance and repairs to the collection system for the upcoming calendar year.

☒ - At this time, the Department recommends the US EPA's Guide for Evaluating Capacity, Management, Operation and Maintenance (CMOM) Programs At Sanitary Sewer Collection Systems (Document # EPA 305-B-05-002) or the Departments' CMOM Model located at http://dnr.mo.gov/env/wpp/permits/docs/cmom-template.doc. For additional information regarding the Departments' CMOM Model, see the CMOM Plan Model Guidance document at http://dnr.mo.gov/pubs/pub2574.htm. The CMOM identifies some of the criteria used to evaluate a collection system's management, operation, and maintenance and was intended for use by the EPA, state, regulated community, and/or third party entities. The CMOM is applicable to small, medium, and large systems; both public and privately owned; and both regional and satellite collection systems. The CMOM does not substitute for the Clean Water Act, the Missouri Clean Water Law, and both federal and state regulations, as it is not a regulation.

**SCHEDULE OF COMPLIANCE (SOC):**
Per 644.051.4 RSMo, a permit may be issued with a Schedule of Compliance (SOC) to provide time for a facility to come into compliance with new state or federal effluent regulations, water quality standards, or other requirements. Such a schedule is not allowed if the facility is already in compliance with the new requirement, or if prohibited by other statute or regulation. A SOC includes an enforceable sequence of interim requirements (actions, operations, or milestone events) leading to compliance with the Missouri Clean Water Law, its implementing regulations, and/or the terms and conditions of an operating permit. *See also* Section 502(17) of the Clean Water Act, and 40 CFR §122.2. For new effluent limitations, the permit includes interim monitoring for the specific parameter to demonstrate the facility is not already in compliance with the new requirement. Per 40 CFR § 122.47(a)(1) and 10 CSR 20-7.031(11), compliance must occur as soon as possible. If the permit provides a schedule for meeting new water quality based effluent limits, a SOC must include an enforceable, final effluent limitation in the permit even if the SOC extends beyond the life of the permit.

A SOC is not allowed:

- For effluent limitations based on technology-based standards established in accordance with federal requirements, if the deadline for compliance established in federal regulations has passed. 40 CFR § 125.3.
- For a newly constructed facility in most cases. Newly constructed facilities must meet applicable effluent limitations when discharge begins, because the facility has installed the appropriate control technology as specified in a permit or antidegradation review. A SOC is allowed for a new water quality based effluent limit that was not included in a previously public noticed permit or antidegradation review, which may occur if a regulation changes during construction.
- To develop a TMDL, UAA, or other study associated with development of a site specific criterion. A facility is not prohibited from conducting these activities, but a SOC may not be granted for conducting these activities.

In order to provide guidance to Permit Writers in developing SOCs, and attain a greater level of consistency, on April 9, 2015 the Department issued an updated policy on development of SOCs. This policy provides guidance to Permit Writers on the standard time frames for schedules for common activities, and guidance on factors that may modify the length of the schedule such as a Cost Analysis for Compliance.

☒ - This permit does not contain a SOC.

**STORMWATER POLLUTION PREVENTION PLAN (SWPPP):**

In accordance with 40 CFR 122.44(k) *Best Management Practices (BMPs)* to control or abate the discharge of pollutants when: (1) Authorized under section 304(e) of the Clean Water Act (CWA) for the control of toxic pollutants and hazardous substances from ancillary industrial activities: (2) Authorized under section 402(p) of the CWA for the control of stormwater discharges; (3) Numeric effluent limitations are infeasible; or (4) the practices are reasonably necessary to achieve effluent limitations and standards or to carry out the purposes and intent of the CWA.

In accordance with the EPA's *Developing Your Stormwater Pollution Prevention Plan, A Guide for Industrial Operators*, (Document number EPA 833-B-09-002) [published by the United States Environmental Protection Agency (USEPA) in February 2009], BMPs are measures or practices used to reduce the amount of pollution entering (regarding this operating permit) waters of the state. BMPs may take the form of a process, activity, or physical structure.

Additionally in accordance with the Stormwater Management, a SWPPP is a series of steps and activities to (1) identify sources of pollution or contamination, and (2) select and carry out actions which prevent or control the pollution of stormwater discharges.

☒ - 10 CSR 20-6.200 and 40 CFR 122.26 includes treatment works treating domestic sewage or any other sewage sludge or wastewater treatment device or system, used in the storage treatment, recycling, and reclamation of municipal or domestic sewage, including land dedicated to the disposal of sewage sludge that is located within the confines of the facility, with a design flow of 1.0 mgd or more, or are required to have an approved pretreatment program under 40 CFR part 403, as an industrial activity in which permit coverage is required.

In lieu of requiring sampling in the site-specific permit, the facility is required to develop and implement a Stormwater Pollution Prevention Plan. A facility can apply for conditional exclusion for "no exposure" of industrial activities and materials to stormwater by submitting to the Department a completed NPDES Form 3510-11 – No Exposure Certification for Exclusion from NPDES Stormwater Permitting. That document and additional information may be found at http://water.epa.gov/polwaste/npdes/stormwater/Conditional-No-Exposure-Exclusion.cfm. Upon approval of the "No Exposure", the permit can be modified to remove the SWPPP requirements. If the facility chooses to retain the conditional exclusion for "no exposure", the facility is required to renew the "No Exposure" exemption during the permit renewal period by submitting NPDES Form 3510-11 with Form B2.

**VARIANCE:**

As per the Missouri Clean Water Law § 644.061.4, variances shall be granted for such period of time and under such terms and conditions as shall be specified by the commission in its order. The variance may be extended by affirmative action of the commission. In no event shall the variance be granted for a period of time greater than is reasonably necessary for complying with the Missouri Clean Water Law §§644.006 to 644.141 or any standard, rule or regulation promulgated pursuant to Missouri Clean Water Law §§644.006 to 644.141.

☒ - This operating permit is not drafted under premises of a petition for variance.

**WASTELOAD ALLOCATIONS (WLA) FOR LIMITS:**

As per [10 CSR 20-2.010(78)], the amount of pollutant each discharger is allowed by the Department to release into a given stream after the Department has determined total amount of pollutant that may be discharged into that stream without endangering its water quality.

Wasteload allocations were calculated where applicable using water quality criteria or water quality model results and the dilution equation below:

$$Ce = \frac{(Qe + Qs)C - (Qs \times Cs)}{(Qe)}$$ (EPA/505/2-90-001, Section 4.5.5)

Where C = downstream concentration Ce = effluent concentration
Cs = upstream concentration Qe = effluent flow
Qs = upstream flow

Chronic wasteload allocations were determined using applicable chronic water quality criteria (CCC: criteria continuous concentration) and stream volume of flow at the edge of the mixing zone (MZ). Acute wasteload allocations were determined using applicable water quality criteria (CMC: criteria maximum concentration) and stream volume of flow at the edge of the zone of initial dilution (ZID).

Water quality based maximum daily and average monthly effluent limitations were calculated using methods and procedures outlined in USEPA's "Technical Support Document For Water Quality-based Toxics Control" (EPA/505/2-90-001).

Number of Samples "n":

Additionally, in accordance with the TSD for water quality-based permitting, effluent quality is determined by the underlying distribution of daily values, which is determined by the Long Term Average (LTA) associated with a particular Wasteload Allocation (WLA) and by the Coefficient of Variation (CV) of the effluent concentrations. Increasing or decreasing the monitoring frequency does not affect this underlying distribution or treatment performance, which should be, at a minimum, be targeted to comply with the values dictated by the WLA. Therefore, it is recommended that the actual planned frequency of monitoring normally be used to determine the value of "n" for calculating the AML. However, in situations where monitoring frequency is once per month or less, a higher value for "n" must be assumed for AML derivation purposes. Thus, the statistical procedure being employed using an assumed number of samples is "n = 4" at a minimum. For Total Ammonia as Nitrogen, "n = 30" is used

**WLA MODELING:**

There are two general types of effluent limitations, technology-based effluent limits (TBELs) and water quality based effluent limits (WQBELs). If TBELs do not provide adequate protection for the receiving waters, then WQBEL must be used.

☒ - A WLA study was either not submitted or determined not applicable by Department staff.

**WATER QUALITY STANDARDS:**

Per [10 CSR 20-7.031(4)], General Criteria shall be applicable to all waters of the state at all times including mixing zones. Additionally, [40 CFR 122.44(d)(1)] directs the Department to establish in each NPDES permit to include conditions to achieve water quality established under Section 303 of the Clean Water Act, including State narrative criteria for water quality.

**WHOLE EFFLUENT TOXICITY (WET) TEST:**

A WET test is a quantifiable method of determining if a discharge from a facility may be causing toxicity to aquatic life by itself, in combination with or through synergistic responses when mixed with receiving stream water.

Under the federal Clean Water Act (CWA) §101(a)(3), requiring WET testing is reasonably appropriate for site-specific Missouri State Operating Permits for discharges to waters of the state issued under the National Pollutant Discharge Elimination System (NPDES). WET testing is also required by 40 CFR 122.44(d)(1). WET testing ensures that the provisions in the 10 CSR 20-6.010(8)(A)7. and the Water Quality Standards 10 CSR 20-7.031(4)(D),(F),(G),(I)2.A & B are being met. Under [10 CSR 20-6.010(8)(A)4], the Department may require other terms and conditions that it deems necessary to assure compliance with the Clean Water Act and related regulations of the Missouri Clean Water Commission. In addition the following MCWL apply: §§§644.051.3 requires the Department to set permit conditions that comply with the MCWL and CWA; 644.051.4 specifically references toxicity as an item we must consider in writing permits (along with water quality-based effluent limits, pretreatment, etc…); and 644.051.5 is the basic authority to require testing conditions. WET test will be required by facilities meeting the following criteria:

- ☒ Facility is a designated Major.
- ☐ Facility continuously or routinely exceeds its design flow.
- ☐ Facility exceeds its design population equivalent (PE) for $BOD_5$ whether or not its design flow is being exceeded.
- ☐ Facility (whether primarily domestic or industrial) alters its production process throughout the year.
- ☐ Facility handles large quantities of toxic substances, or substances that are toxic in large amounts.
- ☒ Facility has Water Quality-based Effluent Limitations for toxic substances (other than $NH_3$)
- ☒ Facility is a municipality with a Design Flow ≥ 22,500 gpd.
- ☐ Other – please justify.

**40 CFR 122.41(M) - BYPASSES:**

The federal Clean Water Act (CWA), Section 402 prohibits wastewater dischargers from "bypassing" untreated or partially treated sewage (wastewater) beyond the headworks. A bypass is defined as an intentional diversion of waste streams from any portion of a treatment facility, [40 CFR 122.41(m)(1)(i)]. Additionally, Missouri regulation 10 CSR 20-7.015(9)(G) states a bypass means the intentional diversion of waste streams from any portion of a treatment facility, except in the case of blending, to waters of the state. Only under exceptional and specified limitations do the federal regulations allow for a facility to bypass some or all of the flow from its treatment process. Bypasses are prohibited by the CWA unless a permittee can meet all of the criteria listed in 40 CFR 122.41(m)(4)(i)(A), (B), & (C). Any bypasses from this facility are subject to the reporting required in 40 CFR 122.41(l)(6) and per Missouri's Standard Conditions I, Section B, part 2.b. Additionally, Anticipated Bypasses include bypasses from peak flow basins or similar devices designed for peak wet weather flows.

☒ - Outfall #003 listed in the previous permit is no longer authorized to discharge as it is a bypass. The Department has developed a Voluntary Compliance Agreement (VCA) for communities that believe they need time to eliminate this discharge. The VCA requires communities to develop and submit bypass elimination plans, to make progress, and to report on this progress. The terms of the VCA is for five (5) years, and is renewable for another five (5) years assuming that adequate progress is being made. In return, the State of Missouri will not initiate enforcement actions for the terms contained in the VCA. This permittee entered into a VCA in 2011.

**303(d) LIST & TOTAL MAXIMUM DAILY LOAD (TMDL):**

Section 303(d) of the federal Clean Water Act requires that each state identify waters that are not meeting water quality standards and for which adequate water pollution controls have not been required. Water quality standards protect such beneficial uses of water as whole body contact (such as swimming), maintaining fish and other aquatic life, and providing drinking water for people, livestock and wildlife. The 303(d) list helps state and federal agencies keep track of waters that are impaired but not addressed by normal water pollution control programs.

A TMDL is a calculation of the maximum amount of a given pollutant that a body of water can absorb before its water quality is affected. If a water body is determined to be impaired as listed on the 303(d) list, then a watershed management plan will be developed that shall include the TMDL calculation

☒ - This facility does not discharge to a 303(d) listed stream.

## Part VI –2013 Water Quality Criteria for Ammonia

Upcoming changes to the Water Quality Standard for ammonia may require significant upgrades to wastewater treatment facilities.

On August 22, 2013, the U.S. Environmental Protection Agency (EPA) finalized new water quality criteria for ammonia, based on toxicity studies of mussels and gill breathing snails. Missouri's current ammonia criteria are based on toxicity testing of several species, but did not include data from mussels or gill breathing snails. Missouri is home to 69 of North America's mussel species, which are spread across the state. According to the Missouri Department of Conservation nearly two-thirds of the mussel species in Missouri are considered to be "of conservation concern". Nine species are listed as federally endangered, with an additional species currently proposed as endangered and another species proposed as threatened.

The adult forms of mussels that are seen in rivers, lakes, and streams are sensitive to pollutants because they are sedentary filter feeders. They vacuum up many pollutants with the food they bring in and cannot escape to new habitats, so they can accumulate toxins in their bodies and die. But very young mussels, called glochidia, are exceptionally sensitive to ammonia in water. As a result of a citizen suit, the EPA was compelled to conduct toxicity testing and develop ammonia water quality criteria that would be protective if young mussels may be present in a waterbody. These new criteria will apply to any discharge with ammonia levels that may pose a reasonable potential to violate the standards. Nearly all discharging domestic wastewater treatment facilities (cities, subdivisions, mobile home parks, etc.), as well as certain industrial and stormwater dischargers with ammonia in their effluent, will be affected by this change in the regulations.

When new water quality criteria are established by the EPA, states must adopt them into their regulations in order to keep their authorization to issue permits under the National Pollutant Discharge Elimination System (NPDES). States are required to review their water quality standards every three years, and if new criteria have been developed they must be adopted. States may be more protective than the Federal requirements, but not less protective. Missouri does not have the resources to conduct the studies necessary for developing new water quality standards, and therefore our standards mirror those developed by the EPA; however, we will utilize any available flexibility based on actual species of mussels that are native to Missouri and their sensitivity to ammonia.

Many treatment facilities in Missouri are currently scheduled to be upgraded to comply with the current water quality standards. But these new ammonia standards may require a different treatment technology than the one being considered by the permittee. It is important that permittees discuss any new and upcoming requirements with their consulting engineers to ensure that their treatment systems are capable of complying with the new requirements. The Department encourages permittees to construct treatment technologies that can attain effluent quality that supports the EPA ammonia criteria.

Ammonia toxicity varies by temperature and by pH of the water. Assuming a stable pH value, but taking into account winter and summer temperatures, Missouri includes two seasons of ammonia effluent limitations. Current effluent limitations in this permit are:

Summer – 8.1 mg/L daily maximum, 1.5 mg/L monthly average.
Winter – Monitoring only; statistical analysis conducted using the past five years of monitoring data submitted by the permittee shows no reasonable potential for ammonia to cause or contribute to an instream excursion in water quality standards in the winter months.

Under the new EPA criteria, where mussels of the family Unionidae are present or expected to be present, the estimated effluent limitations for a facility in a location such as this that discharges to a receiving stream with the mixing consideration listed in Part IV of the Fact Sheet will be:

| Season | Temp (°C) | pH (SU) | Total Ammonia Nitrogen CCC (mg/L) | Total Ammonia Nitrogen CMC (mg/L) |
|---|---|---|---|---|
| Summer | 20 | 7.8 | 1.0 | 5.6 |
| Winter | 10 | 7.8 | 1.9 | 8.1 |

Summer: April 1 – September 30

Chronic WLA: $C_e$ = ((1.94 + 0.027)1.0 – (0.027 * 0.01))/1.94
$C_e$ = 1.01 mg/L

Acute WLA: $C_e$ = ((1.94 + 0.004)5.6 – (0.004 * 0.01))/1.94
$C_e$ = 5.61 mg/L

$LTA_c$ = 1.01 mg/L (0.323) = 0.33 mg/L [CV = 3.27, 99th Percentile, 30 day avg.]
$LTA_a$ = 5.61 mg/L (0.089) = 0.50 mg/L [CV = 3.27, 99th Percentile]

Use most protective number of $LTA_c$ or $LTA_a$.

MDL = 0.33 mg/L (11.22) = **3.7 mg/L** [CV = 3.27, 99th Percentile]
AML = 0.33 mg/L (2.13) = **0.7 mg/L** [CV = 3.27, 95th Percentile, n =30]

Winter: October 1 – March 31

Chronic WLA: $C_e$ = ((1.94 + 0.027)1.9 – (0.027 * 0.01))/1.94
$C_e$ = 1.93 mg/L

Acute WLA: $C_e$ = ((1.94 + 0.004)8.1 – (0.004 * 0.01))/1.94
$C_e$ = 8.12 mg/L

$LTA_c$ = 1.93 mg/L (0.713) = 1.37 mg/L [CV = 0.83, 99th Percentile, 30 day avg.]
$LTA_a$ = 8.12 mg/L (0.242) = 1.96 mg/L [CV = 0.83, 99th Percentile]

Use most protective number of $LTA_c$ or $LTA_a$.

MDL = 1.37 mg/L (4.13) = **5.7 mg/L** [CV = 0.83, 99th Percentile]
AML = 1.37 mg/L (1.27) = **1.7 mg/L** [CV = 0.83, 95th Percentile, n =30]

Summer – 3.7 mg/L daily maximum, 0.7 mg/L monthly average.
Winter – 5.7 mg/L daily maximum, 1.7 mg/L monthly average.

These estimated limits above are based in part on the actual performance of the plant at the time of the drafting of this permit and should not be construed as future effluent limitations. Future effluent limits, based on the EPA's 2013 water quality criteria for ammonia, will depend in part on the actual performance of the facility at the time the permit is renewed.

Operating permits for facilities in Missouri must be written based on current statutes and regulations. Therefore permits will be written with the existing effluent limitations until the new standards are adopted. To aid permittees in decision making, an advisory will be added to permit Fact Sheets notifying permittees of the expected effluent limitations for ammonia. When setting schedules of compliance for ammonia effluent limitations, consideration will be given to facilities that have recently constructed upgraded facilities to meet the current ammonia limitations.

For more information on this topic feel free to contact the Missouri Department of Natural Resources, Water Protection Program, Water Pollution Control Branch, Operating Permits Section at (573) 751-1300.

## Part VII – Effluent Limits Determination

**APPLICABLE DESIGNATIONS OF WATERS OF THE STATE:**
As per Missouri's Effluent Regulations [10 CSR 20-7.015], the waters of the state are divided into the below listed seven (7) categories. Each category lists effluent limitations for specific parameters, which are presented in each outfall's Effluent Limitation Table and further discussed in the Derivation & Discussion of Limits section.

- ☐ Missouri or Mississippi River [10 CSR 20-7.015(2)]
- ☐ Lake or Reservoir [10 CSR 20-7.015(3)]
- ☐ Losing [10 CSR 20-7.015(4)]
- ☐ Metropolitan No-Discharge [10 CSR 20-7.015(5)]
- ☐ Subsurface Water [10 CSR 20-7.015(7)]
- ☒ All Other Waters [10 CSR 20-7.015(8)]

**OUTFALLS #001 AND #002**
**EFFLUENT LIMITATIONS TABLE:**

| PARAMETER | Unit | Basis for Limits | Daily Maximum | Weekly Average | Monthly Average | Previous Permit Limit | Sampling Frequency | Reporting Frequency | Sample Type **** |
|---|---|---|---|---|---|---|---|---|---|
| Flow | MGD | 1 | * | | * | */* | Weekdays | Monthly | T |
| $BOD_5$ (Apr 1 – Sep 30) | mg/L | 1 | | 15 | 10 | 15/10 | Weekly | Monthly | C |
| $BOD_5$ (Oct 1 – Mar 31) | mg/L | 1 | | 20 | 15 | 20/15 | Weekly | Monthly | C |
| TSS | mg/L | 1 | | 45 | 30 | 45/30 | Weekly | Monthly | C |
| *Escherichia coli* ** | #/100mL | 1, 3 | | 630 | 126 | 630/126 | Weekly | Monthly | G |
| Ammonia as N (Apr 1 – Sep 30) | mg/L | 2, 3 | 8.1 | | 1.5 | */* | Monthly | Monthly | G |
| Ammonia as N (Oct 1 – Mar 31) | mg/L | 2, 3 | * | | * | */* | Monthly | Monthly | G |
| Oil & Grease | mg/L | 1, 3 | 15 | | 10 | 15/10 | Quarterly | Quarterly | G |
| Copper, Total Recoverable | µg/L | 2, 3 | * | | * | 31/15 | Quarterly | Quarterly | G |
| Selenium, Total Recoverable | µg/L | 2, 3 | * | | * | 45/23 | Quarterly | Quarterly | G |
| Total Nitrogen | mg/L | 1 | * | | * | */* | Quarterly | Quarterly | G |
| Total Phosphorus | mg/L | 1 | * | | * | */* | Quarterly | Quarterly | G |
| Acute Whole Effluent Toxicity | TUa | 1, 9 | * | | | Pass/Fail | Annually | Annually | C |
| Chronic Whole Effluent Toxicity | TUc | 1, 9 | * | | | *** | Once / permit cycle | Once / permit cycle | C |
| PARAMETER | Unit | Basis for Limits | Minimum | | Maximum | Previous Permit Limit | Sampling Frequency | Reporting Frequency | Sample Type |
| pH | SU | 1 | 6.0 | | 9.0 | 6.0-9.0 | Monthly | Monthly | G |

* - Monitoring requirement only.
** - #/100mL; the Monthly Average for *E. coli* is a geometric mean.
*** - Parameter was not previously established in previous state operating permit.

**** - C = 24-hour composite
G = Grab
T = 24-hr. total

**Basis for Limitations Codes**:
1. State or Federal Regulation/Law
2. Water Quality Standard (includes RPA)
3. Water Quality Based Effluent Limits
4. Antidegradation Review
5. Antidegradation Policy
6. Water Quality Model
7. Best Professional Judgment
8. TMDL or Permit in lieu of TMDL
9. WET Test Policy

**OUTFALLS #001 AND #002 – DERIVATION AND DISCUSSION OF LIMITS:**

- **Flow**. In accordance with [40 CFR Part 122.44(i)(1)(ii)] the volume of effluent discharged from each outfall is needed to assure compliance with permitted effluent limitations. If the permittee is unable to obtain effluent flow, then it is the responsibility of the permittee to inform the Department, which may require the submittal of an operating permit modification.

- **Biochemical Oxygen Demand ($BOD_5$).** Effluent limitations have been found to be protective of water quality standards and have been retained from previous state operating permit.

- **Total Suspended Solids (TSS).** Effluent limitations have been retained from previous state operating permit, please see the **APPLICABLE DESIGNATION OF WATERS OF THE STATE** sub-section of the **Effluent Limits Determination.**

- ***Escherichia coli (E. coli)***. Monthly average of 126 per 100 mL as a geometric mean and Weekly Average of 630 per 100 mL as a geometric mean during the recreational season (April 1 – October 31), to protect Whole Body Contact Recreation (A) designated use of the receiving stream, as per 10 CSR 20-7.031(5)(C). An effluent limit for both monthly average and weekly average is required by 40 CFR 122.45(d). The Geometric Mean is calculated by multiplying all of the data points and then taking the nth root of this product, where n = # of samples collected. For example: Five E. coli samples were collected with results of 1, 4, 6, 10, and 5 (#/100mL). Geometric Mean = $5^{th}$ root of (1)(4)(6)(10)(5) = $5^{th}$ root of 1,200 = 4.1 #/100mL.

- **Total Ammonia Nitrogen**. Early Life Stages Present Total Ammonia Nitrogen criteria apply [10 CSR 20-7.031(5)(B)7.C. & Table B3]. Background total ammonia nitrogen = 0.01 mg/L.

| Season | Temp (°C) | pH (SU) | Total Ammonia Nitrogen CCC (mg/L) | Total Ammonia Nitrogen CMC (mg/L) |
|---|---|---|---|---|
| Summer | 20 | 7.8 | 2.2 | 8.1 |
| Winter | 10 | 7.8 | 3.1 | 8.1 |

Summer: April 1 – September 30

Chronic WLA: $C_e$ = ((1.94 + 0.027)2.2 – (0.027 * 0.01))/1.94
$C_e$ = 2.23 mg/L

Acute WLA: $C_e$ = ((1.94 + 0.004)8.1 – (0.004 * 0.01))/1.94
$C_e$ = 8.12 mg/L

$LTA_c$ = 2.23 mg/L (0.323) = 0.72 mg/L [CV = 3.27, $99^{th}$ Percentile, 30 day avg.]
$LTA_a$ = 8.12 mg/L (0.089) = 0.72 mg/L [CV = 3.27, $99^{th}$ Percentile]

Use most protective number of $LTA_c$ or $LTA_a$.

MDL = 0.72 mg/L (11.22) = **8.1 mg/L** [CV = 3.27, $99^{th}$ Percentile]
AML = 0.72 mg/L (2.13) = **1.5 mg/L** [CV = 3.27, $95^{th}$ Percentile, n =30]

Winter: October 1 – March 31

Monitoring only; statistical analysis conducted using the past five years of monitoring data submitted by the permittee shows no reasonable potential for ammonia to cause or contribute to an instream excursion in water quality standards in the winter months.

- **Oil & Grease**. Conventional pollutant, effluent limitation for protection of aquatic life; 10 mg/L monthly average, 15 mg/L daily maximum.

- **Total Phosphorus and Total Nitrogen**. Monitoring required for facilities greater than 100,000 gpd design flow per 10 CSR 20-7.015(9)(D)7. Total Nitrogen shall be determined by testing for Total Kjeldahl Nitrogen (TKN) and Nitrate + Nitrite and reporting the sum of the results (reported as N). Nitrate + Nitrite can be analyzed together or separately.

- **pH**. 6.0-9.0 SU. Technology based limits [10 CSR 20-7.015] are protective of the water quality standard [10 CSR 20-7.031(5)(E)], due to the buffering capacity of the mixing zone.

- **Copper, Total Recoverable**. Monitoring only; statistical analysis was performed using the past five years of monitoring data submitted by the facility for copper. The analysis determined no reasonable potential for this pollutant to cause or contribute to an instream excursion of water quality standards.

- **Selenium, Total Recoverable**. Monitoring only; statistical analysis was performed using the past five years of monitoring data submitted by the facility for selenium. The analysis determined no reasonable potential for this pollutant to cause or contribute to an instream excursion of water quality standards.

- **Acute Whole Effluent Toxicity**. Monitoring requirement only. Monitoring is required to determine if reasonable potential exists for this facility's discharge to exceed water quality standards.

Acute AEC% = $(((1.94 + 0.0136) / 1.94)^{-1})*100 = 99\%$

The Allowable Effluent Concentration (AEC) for this facility is 99% with the dilution series being: 100%, 50%, 25%, 12.5%, and 6.25%.

- **Chronic Whole Effluent Toxicity**. Monitoring requirement only. Monitoring is required to determine if reasonable potential exists for this facility's discharge to exceed water quality standards.

  Chronic AEC% = $(((1.94 + 0.136) / 1.94)^{-1})*100 = 93\%$

  The Allowable Effluent Concentration (AEC) for this facility is 93% with the dilution series being: 100%, 50%, 25%, 12.5%, and 6.25%.

**Sampling Frequency Justification:**
Sampling frequency for Copper, Selenium, and Oil & Grease has been reduced to quarterly and ammonia and pH reduced to monthly due to satisfactory facility performance. Otherwise, sampling and reporting frequency was retained from previous permit.

**WET Test Sampling Frequency Justification**. WET Testing schedules and intervals are established in accordance with the Department's Permit Manual; Section 5.2 *Effluent Limits / WET Testing for Compliance Bio-monitoring.* It is recommended that WET testing be conducted during the period of lowest stream flow.

- Acute WET Tests shall be conducted no less than once per year for facilities designated as a major.
- Chronic WET Tests shall be conducted no less than once per permit cycle for facilities with a design flow of greater than 1 MGD.

**Sampling Type Justification:**
As per 10 CSR 20-7.015, $BOD_5$, TSS, and WET test samples collected for mechanical plants shall be a 24 hour composite sample. Grab samples, however, must be collected for pH, Ammonia as N, *E. coli*, Oil & Grease, Copper, Selenium, Total Nitrogen, and Total Phosphorus. This is due to the holding time restriction for *E. coli*, the volatility of Ammonia, and the fact that pH cannot be preserved and must be sampled in the field. As Ammonia, Oil & Grease, Copper, Selenium, Total Nitrogen, and Total Phosphorus samples must be immediately preserved, these samples are to be collected as a grab.

**PERMITTED FEATURE #SM1 – INSTREAM MONITORING (UPSTREAM)**
**MONITORING REQUIREMENTS TABLE:**

| PARAMETER | Unit | Basis for Limits | Daily Maximum | Weekly Average | Monthly Average | Previous Permit Limit | Sampling Frequency | Reporting Frequency | Sample Type **** |
|---|---|---|---|---|---|---|---|---|---|
| Total Nitrogen | mg/L | 7 | * | | * | *** | Quarterly | Quarterly | G |
| Total Phosphorus | mg/L | 7 | * | | * | *** | Quarterly | Quarterly | G |

* - Monitoring requirement only.
*** - Parameter not previously established in previous state operating permit.
**** - C = 24-hour composite
G = Grab

**Basis for Limitations Codes**:
1. State or Federal Regulation/Law
2. Water Quality Standard (includes RPA)
3. Water Quality Based Effluent Limits
4. Antidegradation Review
5. Antidegradation Policy
6. Water Quality Model
7. Best Professional Judgment
8. TMDL or Permit in lieu of TMDL
9. WET Test Policy

**PERMITTED FEATURE #SM1 – DERIVATION AND DISCUSSION OF MONITORING REQUIREMENTS:**

- **Total Phosphorus and Total Nitrogen**. Facilities with a design flow greater than 100,000 gallons per day are required to sample their effluent quarterly for Total Phosphorus and Total Nitrogen per 10 CSR 20-7.015(9)(D)7. Upstream monitoring for these parameters is necessary to determine background stream concentrations in order to complete calculations that determine instream nutrient loading.

**Sampling Frequency Justification:**
The sampling and reporting frequency for Total Phosphorus and Total Nitrogen has been established to match the required sampling frequency of these parameters in the effluent.

**Sampling Type Justification**
As Total Phosphorus and Total Nitrogen samples must be immediately preserved; these samples are to be collected as a grab.

**PERMITTED FEATURE #SM2 – INSTREAM MONITORING (DOWNSTREAM)**
**MONITORING REQUIREMENTS TABLE:**

| PARAMETER | Unit | Basis for Limits | Daily Maximum | Weekly Average | Monthly Average | Previous Permit Limit | Sampling Frequency | Reporting Frequency | Sample Type **** |
|---|---|---|---|---|---|---|---|---|---|
| Total Hardness | mg/L | 7 | * | | * | *** | Quarterly | Quarterly | G |

* - Monitoring requirement only.
*** - Parameter not previously established in previous state operating permit.
**** - C = 24-hour composite
G = Grab

**Basis for Limitations Codes**:
1. State or Federal Regulation/Law
2. Water Quality Standard (includes RPA)
3. Water Quality Based Effluent Limits
4. Antidegradation Review
5. Antidegradation Policy
6. Water Quality Model
7. Best Professional Judgment
8. TMDL or Permit in lieu of TMDL
9. WET Test Policy

**PERMITTED FEATURE #SM2 – DERIVATION AND DISCUSSION OF MONITORING REQUIREMENTS:**

- **Total Hardness**. Downstream hardness monitoring has been added to the permit in order to develop a site-specific hardness for determining reasonable potential and calculating hardness-dependent metals limits.

**Sampling Frequency Justification:**
The sampling and reporting frequency for Total Hardness has been established to match the required sampling frequency of the metals parameters in the effluent.

**Sampling Type Justification**
As Total Hardness samples must be immediately preserved; these samples are to be collected as a grab.

## Part VIII – Cost Analysis for Compliance

Pursuant to Section 644.145, RSMo, when issuing permits under this chapter that incorporate a new requirement for discharges from publicly owned combined or separate sanitary or storm sewer systems or publicly owned treatment works, or when enforcing provisions of this chapter or the Federal Water Pollution Control Act, 33 U.S.C. 1251 et seq., pertaining to any portion of a publicly owned combined or separate sanitary or storm sewer system or [publicly owned] treatment works, the Department of Natural Resources shall make a "finding of affordability" on the costs to be incurred and the impact of any rate changes on ratepayers upon which to base such permits and decisions, to the extent allowable under this chapter and the Federal Water Pollution Control Act. This process is completed through a cost analysis for compliance. Permits that do not include new requirements may be deemed affordable.

☒ - The Department is required to determine "findings of affordability" because the permit applies to a combined or separate sanitary sewer system for a publically-owned treatment works.

**Cost Analysis for Compliance -** The Department has made a reasonable search for empirical data indicating the permit is affordable. The search consisted of a review of Department records that might contain economic data on the community, a review of information provided by the applicant as part of the application, and public comments received in response to public notices of this draft permit. If the empirical cost data was used by the permit writer, this data may consist of median household income, any other ongoing projects that the Department has knowledge, and other demographic financial information that the community provided as contemplated by Section 644. 145.3. See **Appendix – Cost Analysis for Compliance**

## Part IX – Administrative Requirements

On the basis of preliminary staff review and the application of applicable standards and regulations, the Department, as administrative agent for the Missouri Clean Water Commission, proposes to issue a permit(s) subject to certain effluent limitations, schedules, and special conditions contained herein and within the operating permit. The proposed determinations are tentative pending public comment.

**PERMIT SYNCHRONIZATION:**
The Department of Natural Resources is currently undergoing a synchronization process for operating permits. Permits are normally issued on a five-year term, but to achieve synchronization many permits will need to be issued for less than the full five years allowed by regulation. The intent is that all permits within a watershed will move through the Watershed Based Management (WBM) cycle together will all expire in the same fiscal year. This will allow further streamlining by placing multiple permits within a smaller geographic area on public notice simultaneously, thereby reducing repeated administrative efforts. This will also allow the Department to explore a watershed based permitting effort at some point in the future. Renewal applications must continue to be submitted within 180 days of expiration, however, in instances where effluent data from the previous renewal is less than 4 years old, that data may be re-submitted to meet the requirements of the renewal application. If the permit provides a schedule of compliance for meeting new water quality based effluent limits beyond the expiration date of the permit, the time remaining in the schedule of compliance will be allotted in the renewed permit. This permit will expire in the 2nd Quarter of calendar year 2020.

**PUBLIC NOTICE:**
The Department shall give public notice that a draft permit has been prepared and its issuance is pending. Additionally, public notice will be issued if a public hearing is to be held because of a significant degree of interest in and water quality concerns related to a draft permit. No public notice is required when a request for a permit modification or termination is denied; however, the requester and permittee must be notified of the denial in writing. The Department must issue public notice of a pending operating permit or of a new or reissued statewide general permit. The public comment period is the length of time not less than 30 days following the date of the public notice which interested persons may submit written comments about the proposed permit. For persons wanting to submit comments regarding this proposed operating permit, then please refer to the Public Notice page located at the front of this draft operating permit. The Public Notice page gives direction on how and where to submit appropriate comments.

☒ - The Public Notice period for this operating permit was from January 15, 2016 – February 16, 2016. Responses to the Public Notice of this operating permit did not warrant the modification of effluent limits and/or the terms and conditions of this permit. Comments were made addressing certain values used in the ammonia effluent limit calculations. It was also requested that the Antidegradation Review Applicability Review Sheet be added to the appendix.

**DATE OF FACT SHEET**: DECEMBER 16, 2015

**COMPLETED BY:**

**ANGELA FALLS, ENVIRONMENTAL SPECIALIST**
**MISSOURI DEPARTMENT OF NATURAL RESOURCES**
**WATER PROTECTION PROGRAM**
**OPERATING PERMITS SECTION - DOMESTIC WASTEWATER UNIT**
**(573) 751-1419**
**angela.falls@dnr.mo.gov**

# Appendices

## APPENDIX - CLASSIFICATION WORKSHEET:

| ITEM | POINTS POSSIBLE | POINTS ASSIGNED |
|---|---|---|
| Maximum Population Equivalent (P.E.) served (Max 10 pts.) | 1 pt./10,000 PE or major fraction thereof. | 1 |
| Maximum: 10 pt Design Flow (avg. day) or peak month; use greater (Max 10 pts.) | 1 pt. / MGD or major fraction thereof. | 1 |
| EFFLUENT DISCHARGE RECEIVING WATER SENSITIVITY: | | |
| Missouri or Mississippi River | 0 | - |
| All other stream discharges except to losing streams and stream reaches supporting whole body contact | 1 | - |
| Discharge to lake or reservoir outside of designated whole body contact recreational area | 2 | - |
| Discharge to losing stream, or stream, lake or reservoir area supporting whole body contact recreation | 3 | 3 |
| PRELIMINARY TREATMENT - Headworks | | |
| Screening and/or comminution | 3 | 3 |
| Grit removal | 3 | 3 |
| Plant pumping of main flow (lift station at the headworks) | 3 | 3 |
| PRIMARY TREATMENT | | |
| Primary clarifiers | 5 | - |
| Combined sedimentation/digestion | 5 | - |
| Chemical addition (except chlorine, enzymes) | 4 | - |
| REQUIRED LABORATORY CONTROL – performed by plant personnel (highest level only) | | |
| Push – button or visual methods for simple test such as pH, Settleable solids | 3 | - |
| Additional procedures such as DO, COD, BOD, titrations, solids, volatile content | 5 | - |
| More advanced determinations such as BOD seeding procedures, fecal coliform, nutrients, total oils, phenols, etc. | 7 | 7 |
| Highly sophisticated instrumentation, such as atomic absorption and gas chromatograph | 10 | - |
| ALTERNATIVE FATE OF EFFLUENT | | |
| Direct reuse or recycle of effluent | 6 | - |
| Land Disposal – low rate | 3 | - |
| High rate | 5 | - |
| Overland flow | 4 | - |
| Total from page **ONE (1)** | ---- | 19 |

**APPENDIX - CLASSIFICATION WORKSHEET (CONTINUED):**

| ITEM | POINTS POSSIBLE | POINTS ASSIGNED |
|---|---|---|
| VARIATION IN RAW WASTE (highest level only) (DMR exceedances and Design Flow exceedances) | | |
| Variation do not exceed those normally or typically expected | 0 | 0 |
| Recurring deviations or excessive variations of 100 to 200 % in strength and/or flow | 2 | - |
| Recurring deviations or excessive variations of more than 200 % in strength and/or flow | 4 | - |
| Raw wastes subject to toxic waste discharge | 6 | - |
| SECONDARY TREATMENT | | |
| Trickling filter and other fixed film media with secondary clarifiers | 10 | - |
| Activated sludge with secondary clarifiers (including extended aeration and oxidation ditches) | 15 | 15 |
| Stabilization ponds without aeration | 5 | - |
| Aerated lagoon | 8 | - |
| Advanced Waste Treatment Polishing Pond | 2 | - |
| Chemical/physical – without secondary | 15 | - |
| Chemical/physical – following secondary | 10 | - |
| Biological or chemical/biological | 12 | - |
| Carbon regeneration | 4 | - |
| DISINFECTION | | |
| Chlorination or comparable | 5 | - |
| Dechlorination | 2 | - |
| On-site generation of disinfectant (except UV light) | 5 | - |
| UV light | 4 | 4 |
| SOLIDS HANDLING - SLUDGE | | |
| Solids Handling Thickening | 5 | - |
| Anaerobic digestion | 10 | - |
| Aerobic digestion | 6 | 6 |
| Evaporative sludge drying | 2 | - |
| Mechanical dewatering | 8 | - |
| Solids reduction (incineration, wet oxidation) | 12 | - |
| Land application | 6 | 6 |
| Total from page **TWO (2)** | ---- | 31 |
| Total from page **ONE (1)** | --- | 19 |
| Grand Total | --- | 50 |

☐ - A: 71 points and greater
☐ - B: 51 points – 70 points
☒ - C: 26 points – 50 points
☐ - D: 0 points – 25 points

**APPENDIX – RPA RESULTS:**

| Parameter | CMC* | RWC Acute* | CCC* | RWC Chronic* | n** | Range max/min | CV*** | MF | RP Yes/No |
|---|---|---|---|---|---|---|---|---|---|
| Total Ammonia as Nitrogen (Summer) mg/L | 8.1 | 161.54 | 2.2 | 159.65 | 30.00 | 22.6/0.032 | 3.27 | 7.16 | YES |
| Total Ammonia as Nitrogen (Winter) mg/L | 8.1 | 2.31 | 3.1 | 2.28 | 29.00 | 0.92/0.022 | 0.83 | 2.51 | NO |
| Total Ammonia as Nitrogen (Summer) mg/L *(future)* | 5.6 | 161.54 | 1.0 | 159.65 | 30.00 | 22.6/0.032 | 3.27 | 7.16 | YES |
| Total Ammonia as Nitrogen (Winter) mg/L *(future)* | 8.1 | 2.31 | 1.9 | 2.28 | 29.00 | 0.92/0.022 | 0.83 | 2.51 | YES |
| Copper, Total Recoverable | 22.0 | 0.10 | 14.1 | 0.09 | 56.00 | 0.05/0.0005 | 0.90 | 2.02 | NO |
| Selenium, Total Recoverable | NA | NA | 5.0 | 0.01 | 56.00 | 0.011/0.0033 | 0.10 | 1.10 | NO |

N/A – Not Applicable
* - Units are (µg/L) unless otherwise noted.
** - If the number of samples is 10 or greater, then the CV value must be used in the WQBEL for the applicable constituent. If the number of samples is < 10, then the default CV value must be used in the WQBEL for the applicable constituent.
*** - Coefficient of Variation (CV) is calculated by dividing the Standard Deviation of the sample set by the Mean of the same sample set.

RWC – Receiving Water Concentration. It is the concentration of a toxicant or the parameter toxicity in the receiving water after mixing (if applicable).
n – Is the number of samples.
MF – Multiplying Factor. 99% Confidence Level and 99% Probability Basis.
RP – Reasonable Potential. It is where an effluent is projected or calculated to cause an excursion above a water quality standard based on a number of factors including, as a minimum, the four factors listed in 40 CFR 122.44(d)(1)(ii).

Reasonable Potential Analysis is conducted as per (TSD, EPA/505/2-90-001, Section 3.3.2). A more detailed version including calculations of this RPA is available upon request.

**APPENDIX – FACILITY LAYOUT:**

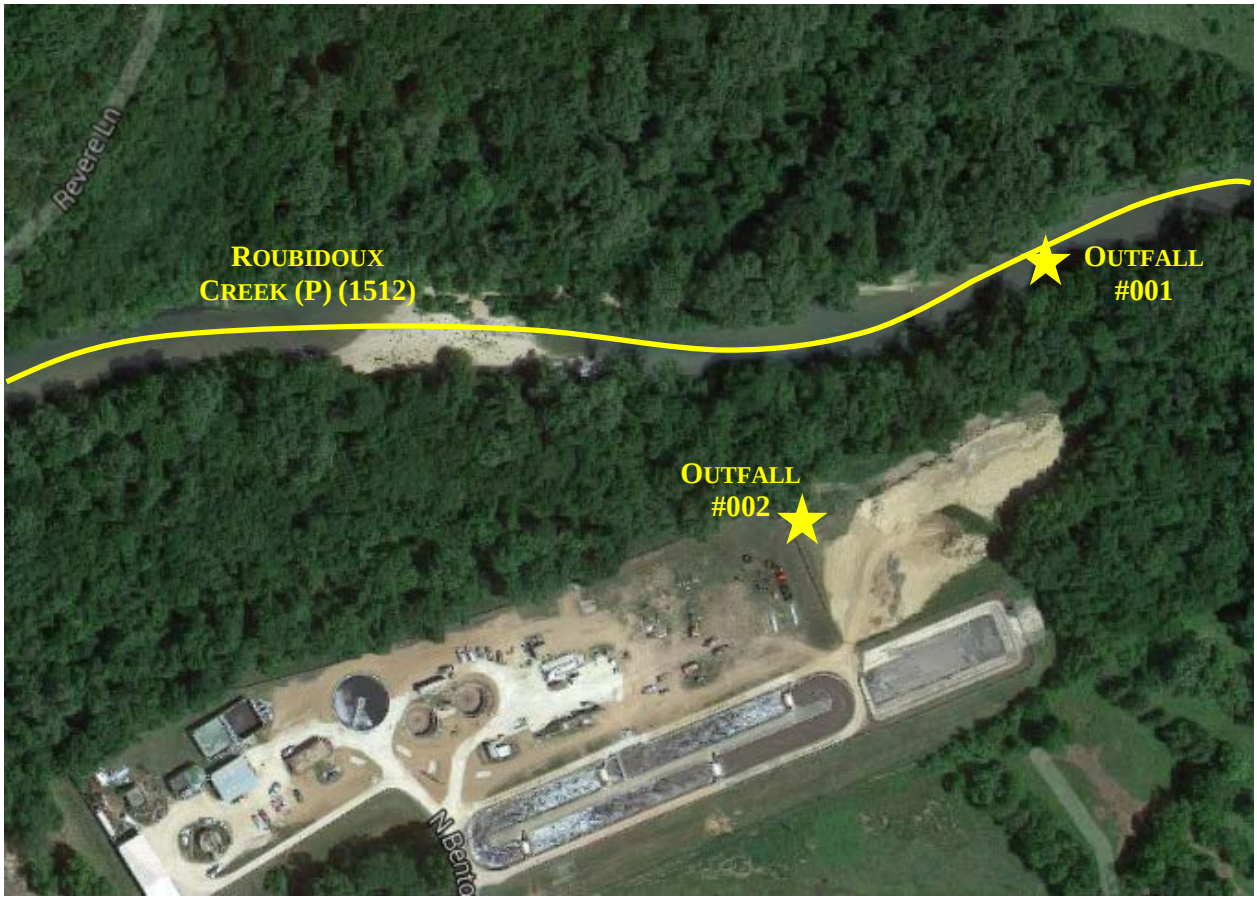

**APPENDIX – COST ANALYSIS FOR COMPLIANCE:**

**Missouri Department of Natural Resources**
**Water Protection Program**
**Cost Analysis for Compliance**
**(In accordance with RSMo 644.145)**

**Waynesville WWTF, Permit Renewal**
**City of Waynesville**
**Missouri State Operating Permit #MO-0094161**

Section 644.145 RSMo requires the Department of Natural Resources (DNR) to make a "finding of affordability" when "issuing permits under" or "enforcing provisions of" state or federal clean water laws "pertaining to any portion of a combined or separate sanitary sewer system for publicly-owned treatment works."

The Department is required to issue a permit with final effluent limits in accordance with 644.051.1.(1) RSMo, 644.051.1.(2) RSMo, and the Clean Water Act. The practical result of this analysis will be to allow longer compliance schedules to mitigate adverse impact to distressed populations resulting from the costs of upgrading the wastewater treatment facility.

This cost analysis is based on data available to the Department as provided by the permittee and data obtained from readily available sources. For the most accurate analysis, it is essential that the permittee provides the Department with current information about the City's financial and socioeconomic situation. The financial questionnaire available to permittees on the DNR website (http://dnr.mo.gov/forms/780-2511-f.pdf) should have been submitted with the permit renewal application. If it was not received with the renewal application, the Department sent a request to complete it with the welcome letter.

**Facility Description:** Screening / grit removal / screw pumps / oxidation ditch / flow equalization basin / UV disinfection / aerobic sludge digestion / sludge is land applied.

| | |
|---|---|
| Residential Connections: | 1,916 |
| Commercial Connections: | 170 |
| Industrial Connections: | 0 |
| Total Connections for this facility: | 2,086 |

## New Permit Requirements:

The permit requires compliance with the following new requirements:

- Total Phosphorus and Total Nitrogen quarterly effluent monitoring
- Total Phosphorus and Total Nitrogen quarterly upstream monitoring
- Total Hardness downstream monitoring
- Chronic WET test once per permit cycle
- Stormwater Pollution Prevention Plan (SWPPP) development and implementation

## Anticipated Costs Associated with Complying with the New Requirements:

The breakdown of estimated costs for these new sampling requirements is as follows: phosphorus and nitrogen monitoring in the effluent and instream is $800 annually, hardness is $80 annually, and chronic WET test is $1,550 per test or $310 per year over the permit cycle. The department estimates the cost to develop and implement a SWPPP to be $10,000 over a five year period or $2,000 annually. This covers an employee earning $20/hour working 1,000 hours. The total cost estimated for new permit requirements is $3,190 annually. This cost, if financed through user fees, might cost each household an extra $0.13[1] per month. A community sets their user rates based on several factors. The percentage of the current user rate that is available to cover new debt is unknown to the Department.

## (1) A community's financial capability and ability to raise or secure necessary funding;

Due to the minimal cost associated with this new permit requirement, the Department anticipates the City of Waynesville has the means to raise $3,190 annually.

**(2) Affordability of pollution control options for the individuals or households at or below the median household income level of the community;**

The total cost estimated for the new permit requirements is $3,190 annually. This cost, if financed through user fees, might cost each household an extra $0.13 per month. This would make the additional cost per household as a percent of median household income (MHI) 0.003%[2] based on the State's MHI of $49,078. Due to the minimal cost associated with this new requirement, the Department anticipates an extremely low to no rate increase will be necessary that could impact individuals or households of the community.

**(3) An evaluation of the overall costs and environmental benefits of the control technologies;**

**Nutrient Monitoring**
Nutrients are mineral compounds that are required for organisms to grow and thrive. Of the six (6) elemental macronutrients, Nitrogen and Phosphorus are generally not readily available and limit growth of organisms. Excess nitrogen and phosphorus will cause a shift in the ecosystem's food web. Once excess nitrogen and phosphorous are introduced into a waterbody, some species' populations will dramatically increase, while other populations will not be able to sustain life. Competition and productivity are two factors in which nutrients can alter aquatic ecosystems and the designated uses of a waterbody. For example, designated uses, such as drinking water sources and recreational uses become impaired when algal blooms take over a waterbody. These blooms can cause foul tastes and odors in the drinking water, unsightly appearance, and fish mortality in the waterbody. Some algae also produce toxins that may cause serious adverse health conditions such as liver damage, tumor promotion, paralysis, and kidney damage. The monitoring requirements for Nitrogen and Phosphorus have been added to the permit to provide data regarding the health of the receiving stream's aquatic life. A healthy ecosystem is beneficial as it provides reduced impacts on human and aquatic health as well as recreational opportunities.

**(4) Inclusion of ongoing costs of operating and maintaining the existing wastewater collection and treatment system, including payments on outstanding debts for wastewater collection and treatment systems when calculating projected rates:**

The community reported their outstanding debt for their current wastewater collection and treatment systems to be $4,557,602. The community reported that each user pays $17.60 each month, which is used toward payments on the current outstanding debt.

**(5) An inclusion of ways to reduce economic impacts on distressed populations in the community, including but not limited to low and fixed income populations. This requirement includes but is not limited to:**

(a) Allowing adequate time in implementation schedules to mitigate potential adverse impacts on distressed populations resulting from the costs of the improvements and taking into consideration local community economic considerations.
(b) Allowing for reasonable accommodations for regulated entities when inflexible standards and fines would impose a disproportionate financial hardship in light of the environmental benefits to be gained.

**Socioeconomic Data[3-6]:**

| Potentially Distressed Populations – City of Waynesville | |
|---|---|
| Unemployment | 6.6% |
| Adjusted Median Household Income (MHI)* | $57,132 |
| Percent Change in MHI (1990-2012) | +38.5% |
| Percent Population Growth/Decline (1990-2012) | +42.0% |
| Change in Median Age in Years (1990-2012) | +34.4 |
| Percent of Households in Poverty | 9.5% |
| Percent of Households Relying on Food Stamps | 10.2% |

* The State's average MHI of $49,078 is used in this analysis

**(6) An assessment of other community investments and operating costs relating to environmental improvements and public health protection;**

The community did not report any other investments relating to environmental improvements.

**(7) An assessment of factors set forth in the United States Environmental Protection Agency's guidance, including but not limited to the "Combined Sewer Overflow Guidance for Financial Capability Assessment and Schedule Development" that may ease the cost burdens of implementing wet weather control plans, including but not limited to small system considerations, the attainability of water quality standards, and the development of wet weather standards;**

The new sampling requirements associated with this permit will not impose a financial burden on the community, nor will the new requirements require the City of Waynesville to seek funding from an outside source.

## (8) An assessment of any other relevant local community economic condition.

The community did not report any other relevant local economic conditions.

## Conclusion and Finding

As a result of new regulations, the Department is proposing modifications to the current operating permit that may require the permittee to increase monitoring. The Department identified the actions for which cost analysis for compliance is required under Section 644.145 RSMo.

The Department estimates the cost for new permit requirements is $3,190 per year. Should these additional costs be financed through user fees, it may require user fees 0.003% of the community's MHI.

The Department considered the eight (8) criteria presented in subsection 644.145.3 when evaluating the cost associated with the relevant actions. Taking into consideration these criteria, this analysis examined whether the above referenced permit modifications affects the ability of an individual customer or household to pay a utility bill without undue hardship or unreasonable sacrifice in the essential lifestyle or spending patterns of the individual or household. As a result of reviewing the above criteria, the Department hereby finds that the action described above may result in a low burden with regard to the community's overall financial capability and a low financial impact for most individual customers/households; therefore, the new permit requirements are affordable.

**References:**

1. (($3,190/2,086 connections)/12 months) = $0.13
2. ($0.13/($49,078/12))*100 = 0.003%
3. Unemployment data was obtained from Missouri Department of Economic Development (July 2014) – http://www.missourieconomy.org/pdfs/urel1407.pdf
4. Median Household Income data from American Community Survey – Median income in the past 12 months – http://factfinder2.census.gov/faces/tableservices/jsf/pages/productview.xhtml?fpt=table
5. Population trend data was obtained from online at: 2012 Census Bureau Population Data - http://factfinder2.census.gov/faces/tableservices/jsf/pages/productview.xhtml?fpt=table, 2000 Census Bureau Population Data - http://www.census.gov/popest/data/cities/totals/2009/tables/SUB-EST2009-04-29.xls, 1990 Census Bureau Population Data - http://www.census.gov/prod/cen1990/cp1/cp-1-27.pdf
6. Poverty data – American Community Survey- http://factfinder2.census.gov/faces/nav/jsf/pages/searchresults.xhtml?refresh=t

**APPENDIX – ANTIDEGRADATION REVIEW APPLICABILITY REVIEW SHEET:**

**Missouri Department of Natural Resources**
**Water Protection Program**
**Water Pollution Control Branch**
**NPDES Permits and Engineering Section**

# Antidegradation Review Applicability Review Sheet

## FACILITY INFORMATION

FACILITY NAME: Waynesville WWTF PERMIT #: MO-0094161

EDU*: Ozark/Gasconade 8-DIGIT HUC: 10290201 COUNTY: Pulaski
*Ecological Drainage Unit

LEGAL DESCRIPTION: SW¼, NE¼, Sec. 24, T36N, R12W LATITUDE/LONGITUDE: 3750073/-09211491

## OUTFALL CHARACTERISTICS

| OUTFALL | DESIGN FLOW (MGD) | TREATMENT TYPE | EFFLUENT TYPE |
|---|---|---|---|
| 001 | 1.25 | Oxidation Ditch / UV Disinfection | Municipal |

## RECEIVING WATERBODY INFORMATION

WATERBODY NAME: Roubidoux Creek CLASS: P

## PROJECT INFORMATION

DESCRIPTION: Upgrade of the existing facility and replacement of some existing equipment.

PROPOSAL: Install new fine screen, equalization basin, clarifier, and return and waste activated sludge pumping equipment, switch to ultraviolet disinfection from chlorination, and replace existing grit chamber blowers, secondary treatment process equipment, oxidation ditch rotors, and electrical appurtenances.

DISCUSSION: The design flow will not change as no increase in design flow is proposed.

DETERMINATION: Facility is not subject to an Antidegradation Review as this proposed project is an upgrade and is not considered a new or expanding facility.

Reviewer: Keith Forck
Date: January 7, 2010
Approver: John Rustige

# STANDARD CONDITIONS FOR NPDES PERMITS
# ISSUED BY
# THE MISSOURI DEPARTMENT OF NATURAL RESOURCES
# MISSOURI CLEAN WATER COMMISSION
# REVISED
# AUGUST 1, 2014

These Standard Conditions incorporate permit conditions as required by 40 CFR 122.41 or other applicable state statutes or regulations. These minimum conditions apply unless superseded by requirements specified in the permit.

## Part I – General Conditions
## Section A – Sampling, Monitoring, and Recording

1. **Sampling Requirements.**
   a. Samples and measurements taken for the purpose of monitoring shall be representative of the monitored activity.
   b. All samples shall be taken at the outfall(s) or Missouri Department of Natural Resources (Department) approved sampling location(s), and unless specified, before the effluent joins or is diluted by any other body of water or substance.

2. **Monitoring Requirements**.
   a. Records of monitoring information shall include:
      i. The date, exact place, and time of sampling or measurements;
      ii. The individual(s) who performed the sampling or measurements;
      iii. The date(s) analyses were performed;
      iv. The individual(s) who performed the analyses;
      v. The analytical techniques or methods used; and
      vi. The results of such analyses.
   b. If the permittee monitors any pollutant more frequently than required by the permit at the location specified in the permit using test procedures approved under 40 CFR Part 136, or another method required for an industry-specific waste stream under 40 CFR subchapters N or O, the results of such monitoring shall be included in the calculation and reported to the Department with the discharge monitoring report data (DMR) submitted to the Department pursuant to Section B, paragraph 7.

3. **Sample and Monitoring Calculations.** Calculations for all sample and monitoring results which require averaging of measurements shall utilize an arithmetic mean unless otherwise specified in the permit.

4. **Test Procedures**. The analytical and sampling methods used shall conform to the reference methods listed in 10 CSR 20-7.015 unless alternates are approved by the Department. The facility shall use sufficiently sensitive analytical methods for detecting, identifying, and measuring the concentrations of pollutants. The facility shall ensure that the selected methods are able to quantify the presence of pollutants in a given discharge at concentrations that are low enough to determine compliance with Water Quality Standards in 10 CSR 20-7.031 or effluent limitations unless provisions in the permit allow for other alternatives. A method is "sufficiently sensitive" when; 1) the method minimum level is at or below the level of the applicable water quality criterion for the pollutant or, 2) the method minimum level is above the applicable water quality criterion, but the amount of pollutant in a facility's discharge is high enough that the method detects and quantifies the level of pollutant in the discharge, or 3) the method has the lowest minimum level of the analytical methods approved under 10 CSR 20-7.015. These methods are also required for parameters that are listed as monitoring only, as the data collected may be used to determine if limitations need to be established. A permittee is responsible for working with their contractors to ensure that the analysis performed is sufficiently sensitive.

5. **Record Retention.** Except for records of monitoring information required by the permit related to the permittee's sewage sludge use and disposal activities, which shall be retained for a period of at least five (5) years (or longer as required by 40 CFR part 503), the permittee shall retain records of all monitoring information, including all calibration and maintenance records and all original strip chart recordings for continuous monitoring instrumentation, copies of all reports required by the permit, and records of all data used to complete the application for the permit, for a period of at least three (3) years from the date of the sample, measurement, report or application. This period may be extended by request of the Department at any time.

6. **Illegal Activities.**
   a. The Federal Clean Water Act provides that any person who falsifies, tampers with, or knowingly renders inaccurate any monitoring device or method required to be maintained under the permit shall, upon conviction, be punished by a fine of not more than $10,000, or by imprisonment for not more than two (2) years, or both. If a conviction of a person is for a violation committed after a first conviction of such person under this paragraph, punishment is a fine of not more than $20,000 per day of violation, or by imprisonment of not more than four (4) years, or both.
   b. The Missouri Clean Water Law provides that any person or who falsifies, tampers with, or knowingly renders inaccurate any monitoring device or method required to be maintained pursuant to sections 644.006 to 644.141 shall, upon conviction, be punished by a fine of not more than $10,000, or by imprisonment for not more than six (6) months, or by both. Second and successive convictions for violation under this paragraph by any person shall be punished by a fine of not more than $50,000 per day of violation, or by imprisonment for not more than two (2) years, or both.

## Section B – Reporting Requirements

1. **Planned Changes.**
   a. The permittee shall give notice to the Department as soon as possible of any planned physical alterations or additions to the permitted facility when:
      i. The alteration or addition to a permitted facility may meet one of the criteria for determining whether a facility is a new source in 40 CFR 122.29(b); or
      ii. The alteration or addition could significantly change the nature or increase the quantity of pollutants discharged. This notification applies to pollutants which are subject neither to effluent limitations in the permit, nor to notification requirements under 40 CFR 122.42;
      iii. The alteration or addition results in a significant change in the permittee's sludge use or disposal practices, and such alteration, addition, or change may justify the application of permit conditions that are different from or absent in the existing permit, including notification of additional use or disposal sites not reported during the permit application process or not reported pursuant to an approved land application plan;
      iv. Any facility expansions, production increases, or process modifications which will result in a new or substantially different discharge or sludge characteristics must be reported to the Department 60 days before the facility or process modification begins. Notification may be accomplished by application for a new permit. If the discharge does not violate effluent limitations specified in the permit, the facility is to submit a notice to the Department of the changed discharge at least 30 days before such changes. The Department may require a construction permit and/or permit modification as a result of the proposed changes at the facility.

2. **Non-compliance Reporting.**
   a. The permittee shall report any noncompliance which may endanger health or the environment. Relevant information shall be provided orally or via the current electronic method approved by the Department, within 24 hours from the time the permittee becomes aware of the circumstances, and shall be reported to the appropriate Regional Office during normal business hours or the Environmental Emergency Response hotline at 573-634-2436 outside of normal business hours. A written submission shall also be provided within five (5) business days of the time the permittee becomes aware of the circumstances. The written submission shall contain a description of the noncompliance and its cause; the period of noncompliance, including exact dates and times, and if the noncompliance has not been corrected, the anticipated time it is expected to continue; and steps taken or planned to reduce, eliminate, and prevent reoccurrence of the noncompliance.

b. The following shall be included as information which must be reported within 24 hours under this paragraph.
   i. Any unanticipated bypass which exceeds any effluent limitation in the permit.
   ii. Any upset which exceeds any effluent limitation in the permit.
   iii. Violation of a maximum daily discharge limitation for any of the pollutants listed by the Department in the permit required to be reported within 24 hours.
c. The Department may waive the written report on a case-by-case basis for reports under paragraph 2. b. of this section if the oral report has been received within 24 hours.

3. **Anticipated Noncompliance**. The permittee shall give advance notice to the Department of any planned changes in the permitted facility or activity which may result in noncompliance with permit requirements. The notice shall be submitted to the Department 60 days prior to such changes or activity.

4. **Compliance Schedules.** Reports of compliance or noncompliance with, or any progress reports on, interim and final requirements contained in any compliance schedule of the permit shall be submitted no later than 14 days following each schedule date. The report shall provide an explanation for the instance of noncompliance and a proposed schedule or anticipated date, for achieving compliance with the compliance schedule requirement.

5. **Other Noncompliance.** The permittee shall report all instances of noncompliance not reported under paragraphs 2, 3, and 6 of this section, at the time monitoring reports are submitted. The reports shall contain the information listed in paragraph 2. a. of this section.

6. **Other Information**. Where the permittee becomes aware that it failed to submit any relevant facts in a permit application, or submitted incorrect information in a permit application or in any report to the Department, it shall promptly submit such facts or information.

7. **Discharge Monitoring Reports.**
   a. Monitoring results shall be reported at the intervals specified in the permit.
   b. Monitoring results must be reported to the Department via the current method approved by the Department, unless the permittee has been granted a waiver from using the method. If the permittee has been granted a waiver, the permittee must use forms provided by the Department.
   c. Monitoring results shall be reported to the Department no later than the 28th day of the month following the end of the reporting period.

## Section C – Bypass/Upset Requirements

1. **Definitions.**
   a. *Bypass*: the intentional diversion of waste streams from any portion of a treatment facility, except in the case of blending.
   b. *Severe Property Damage*: substantial physical damage to property, damage to the treatment facilities which causes them to become inoperable, or substantial and permanent loss of natural resources which can reasonably be expected to occur in the absence of a bypass. Severe property damage does not mean economic loss caused by delays in production.
   c. *Upset*: an exceptional incident in which there is unintentional and temporary noncompliance with technology based permit effluent limitations because of factors beyond the reasonable control of the permittee. An upset does not include noncompliance to the extent caused by operational error, improperly designed treatment facilities, inadequate treatment facilities, lack of preventive maintenance, or careless or improper operation.

2. **Bypass Requirements.**
   a. Bypass not exceeding limitations. The permittee may allow any bypass to occur which does not cause effluent limitations to be exceeded, but only if it also is for essential maintenance to assure efficient operation. These bypasses are not subject to the provisions of paragraphs 2. b. and 2. c. of this section.
   b. Notice.
      i. Anticipated bypass. If the permittee knows in advance of the need for a bypass, it shall submit prior notice, if possible at least 10 days before the date of the bypass.
      ii. Unanticipated bypass. The permittee shall submit notice of an unanticipated bypass as required in Section B – Reporting Requirements, paragraph 5 (24-hour notice).
   c. Prohibition of bypass.
      i. Bypass is prohibited, and the Department may take enforcement action against a permittee for bypass, unless:
         1. Bypass was unavoidable to prevent loss of life, personal injury, or severe property damage;
         2. There were no feasible alternatives to the bypass, such as the use of auxiliary treatment facilities, retention of untreated wastes, or maintenance during normal periods of equipment downtime. This condition is not satisfied if adequate back-up equipment should have been installed in the exercise of reasonable engineering judgment to prevent a bypass which occurred during normal periods of equipment downtime or preventive maintenance; and
         3. The permittee submitted notices as required under paragraph 2. b. of this section.
      ii. The Department may approve an anticipated bypass, after considering its adverse effects, if the Department determines that it will meet the three (3) conditions listed above in paragraph 2. c. i. of this section.

3. **Upset Requirements.**
   a. Effect of an upset. An upset constitutes an affirmative defense to an action brought for noncompliance with such technology based permit effluent limitations if the requirements of paragraph 3. b. of this section are met. No determination made during administrative review of claims that noncompliance was caused by upset, and before an action for noncompliance, is final administrative action subject to judicial review.
   b. Conditions necessary for a demonstration of upset. A permittee who wishes to establish the affirmative defense of upset shall demonstrate, through properly signed, contemporaneous operating logs, or other relevant evidence that:
      i. An upset occurred and that the permittee can identify the cause(s) of the upset;
      ii. The permitted facility was at the time being properly operated; and
      iii. The permittee submitted notice of the upset as required in Section B – Reporting Requirements, paragraph 2. b. ii. (24-hour notice).
      iv. The permittee complied with any remedial measures required under Section D – Administrative Requirements, paragraph 4.
   c. Burden of proof. In any enforcement proceeding, the permittee seeking to establish the occurrence of an upset has the burden of proof.

## Section D – Administrative Requirements

1. **Duty to Comply.** The permittee must comply with all conditions of this permit. Any permit noncompliance constitutes a violation of the Missouri Clean Water Law and Federal Clean Water Act and is grounds for enforcement action; for permit termination, revocation and reissuance, or modification; or denial of a permit renewal application.
   a. The permittee shall comply with effluent standards or prohibitions established under section 307(a) of the Federal Clean Water Act for toxic pollutants and with standards for sewage sludge use or disposal established under section 405(d) of the CWA within the time provided in the regulations that establish these standards or prohibitions or standards for sewage sludge use or disposal, even if the permit has not yet been modified to incorporate the requirement.
   b. The Federal Clean Water Act provides that any person who violates section 301, 302, 306, 307, 308, 318 or 405 of the Act, or any permit condition or limitation implementing any such sections in a permit issued under section 402, or any requirement imposed in a pretreatment program approved under sections 402(a)(3) or 402(b)(8) of the Act, is subject to a civil penalty not to exceed $25,000 per day for each violation. The Federal Clean Water Act provides that any person who negligently violates sections 301, 302, 306, 307, 308, 318, or 405 of the Act, or any condition or limitation implementing any of such sections in a permit issued under section 402 of the Act, or any requirement

imposed in a pretreatment program approved under section 402(a)(3) or 402(b)(8) of the Act, is subject to criminal penalties of $2,500 to $25,000 per day of violation, or imprisonment of not more than one (1) year, or both. In the case of a second or subsequent conviction for a negligent violation, a person shall be subject to criminal penalties of not more than $50,000 per day of violation, or by imprisonment of not more than two (2) years, or both. Any person who knowingly violates such sections, or such conditions or limitations is subject to criminal penalties of $5,000 to $50,000 per day of violation, or imprisonment for not more than three (3) years, or both. In the case of a second or subsequent conviction for a knowing violation, a person shall be subject to criminal penalties of not more than $100,000 per day of violation, or imprisonment of not more than six (6) years, or both. Any person who knowingly violates section 301, 302, 303, 306, 307, 308, 318 or 405 of the Act, or any permit condition or limitation implementing any of such sections in a permit issued under section 402 of the Act, and who knows at that time that he thereby places another person in imminent danger of death or serious bodily injury, shall, upon conviction, be subject to a fine of not more than $250,000 or imprisonment of not more than 15 years, or both. In the case of a second or subsequent conviction for a knowing endangerment violation, a person shall be subject to a fine of not more than $500,000 or by imprisonment of not more than 30 years, or both. An organization, as defined in section 309(c)(3)(B)(iii) of the CWA, shall, upon conviction of violating the imminent danger provision, be subject to a fine of not more than $1,000,000 and can be fined up to $2,000,000 for second or subsequent convictions.

c. Any person may be assessed an administrative penalty by the EPA Director for violating section 301, 302, 306, 307, 308, 318 or 405 of this Act, or any permit condition or limitation implementing any of such sections in a permit issued under section 402 of this Act. Administrative penalties for Class I violations are not to exceed $10,000 per violation, with the maximum amount of any Class I penalty assessed not to exceed $25,000. Penalties for Class II violations are not to exceed $10,000 per day for each day during which the violation continues, with the maximum amount of any Class II penalty not to exceed $125,000.

d. It is unlawful for any person to cause or permit any discharge of water contaminants from any water contaminant or point source located in Missouri in violation of sections 644.006 to 644.141 of the Missouri Clean Water Law, or any standard, rule or regulation promulgated by the commission. In the event the commission or the director determines that any provision of sections 644.006 to 644.141 of the Missouri Clean Water Law or standard, rules, limitations or regulations promulgated pursuant thereto, or permits issued by, or any final abatement order, other order, or determination made by the commission or the director, or any filing requirement pursuant to sections 644.006 to 644.141 of the Missouri Clean Water Law or any other provision which this state is required to enforce pursuant to any federal water pollution control act, is being, was, or is in imminent danger of being violated, the commission or director may cause to have instituted a civil action in any court of competent jurisdiction for the injunctive relief to prevent any such violation or further violation or for the assessment of a penalty not to exceed $10,000 per day for each day, or part thereof, the violation occurred and continues to occur, or both, as the court deems proper. Any person who willfully or negligently commits any violation in this paragraph shall, upon conviction, be punished by a fine of not less than $2,500 nor more than $25,000 per day of violation, or by imprisonment for not more than one year, or both. Second and successive convictions for violation of the same provision of this paragraph by any person shall be punished by a fine of not more than $50,000 per day of violation, or by imprisonment for not more than two (2) years, or both.

2. **Duty to Reapply.**
   a. If the permittee wishes to continue an activity regulated by this permit after the expiration date of this permit, the permittee must apply for and obtain a new permit.
   b. A permittee with a currently effective site-specific permit shall submit an application for renewal at least 180 days before the expiration date of the existing permit, unless permission for a later date has been granted by the Department. (The Department shall not grant permission for applications to be submitted later than the expiration date of the existing permit.)
   c. A permittees with currently effective general permit shall submit an application for renewal at least 30 days before the existing permit expires, unless the permittee has been notified by the Department that an earlier application must be made. The Department may grant permission for a later submission date. (The Department shall not grant permission for applications to be submitted later than the expiration date of the existing permit.)

3. **Need to Halt or Reduce Activity Not a Defense.** It shall not be a defense for a permittee in an enforcement action that it would have been necessary to halt or reduce the permitted activity in order to maintain compliance with the conditions of this permit.

4. **Duty to Mitigate.** The permittee shall take all reasonable steps to minimize or prevent any discharge or sludge use or disposal in violation of this permit which has a reasonable likelihood of adversely affecting human health or the environment.

5. **Proper Operation and Maintenance**. The permittee shall at all times properly operate and maintain all facilities and systems of treatment and control (and related appurtenances) which are installed or used by the permittee to achieve compliance with the conditions of this permit. Proper operation and maintenance also includes adequate laboratory controls and appropriate quality assurance procedures. This provision requires the operation of back-up or auxiliary facilities or similar systems which are installed by a permittee only when the operation is necessary to achieve compliance with the conditions of the permit.

6. **Permit Actions.**
   a. Subject to compliance with statutory requirements of the Law and Regulations and applicable Court Order, this permit may be modified, suspended, or revoked in whole or in part during its term for cause including, but not limited to, the following:
      i. Violations of any terms or conditions of this permit or the law;
      ii. Having obtained this permit by misrepresentation or failure to disclose fully any relevant facts;
      iii. A change in any circumstances or conditions that requires either a temporary or permanent reduction or elimination of the authorized discharge; or
      iv. Any reason set forth in the Law or Regulations.
   b. The filing of a request by the permittee for a permit modification, revocation and reissuance, or termination, or a notification of planned changes or anticipated noncompliance does not stay any permit condition.

7. **Permit Transfer.**
   a. Subject to 10 CSR 20-6.010, an operating permit may be transferred upon submission to the Department of an application to transfer signed by the existing owner and the new owner, unless prohibited by the terms of the permit. Until such time the permit is officially transferred, the original permittee remains responsible for complying with the terms and conditions of the existing permit.
   b. The Department may require modification or revocation and reissuance of the permit to change the name of the permittee and incorporate such other requirements as may be necessary under the Missouri Clean Water Law or the Federal Clean Water Act.
   c. The Department, within 30 days of receipt of the application, shall notify the new permittee of its intent to revoke or reissue or transfer the permit.

8. **Toxic Pollutants.** The permittee shall comply with effluent standards or prohibitions established under section 307(a) of the Federal Clean Water Act for toxic pollutants and with standards for sewage sludge use or disposal established under section 405(d) of the Federal Clean Water Act within the time provided in the regulations that establish these standards or prohibitions or standards for sewage sludge use or disposal, even if the permit has not yet been modified to incorporate the requirement.

9. **Property Rights.** This permit does not convey any property rights of any sort, or any exclusive privilege.

10. **Duty to Provide Information.** The permittee shall furnish to the Department, within a reasonable time, any information which the Department may request to determine whether cause exists for modifying, revoking and reissuing, or terminating this permit or to determine compliance with this permit. The permittee shall also furnish to the Department upon request, copies of records required to be kept by this permit.

11. **Inspection and Entry.** The permittee shall allow the Department, or an authorized representative (including an authorized contractor acting as a representative of the Department), upon presentation of credentials and other documents as may be required by law, to:
    a. Enter upon the permittee's premises where a regulated facility or activity is located or conducted, or where records must be kept under the conditions of the permit;
    b. Have access to and copy, at reasonable times, any records that must be kept under the conditions of this permit;
    c. Inspect at reasonable times any facilities, equipment (including monitoring and control equipment), practices, or operations regulated or required under this permit; and
    d. Sample or monitor at reasonable times, for the purposes of assuring permit compliance or as otherwise authorized by the Federal Clean Water Act or Missouri Clean Water Law, any substances or parameters at any location.

12. **Closure of Treatment Facilities.**
    a. Persons who cease operation or plan to cease operation of waste, wastewater, and sludge handling and treatment facilities shall close the facilities in accordance with a closure plan approved by the Department.
    b. Operating Permits under 10 CSR 20-6.010 or under 10 CSR 20-6.015 are required until all waste, wastewater, and sludges have been disposed of in accordance with the closure plan approved by the Department and any disturbed areas have been properly stabilized. Disturbed areas will be considered stabilized when perennial vegetation, pavement, or structures using permanent materials cover all areas that have been disturbed. Vegetative cover, if used, shall be at least 70% plant density over 100% of the disturbed area.

13. **Signatory Requirement.**
    a. All permit applications, reports required by the permit, or information requested by the Department shall be signed and certified. (See 40 CFR 122.22 and 10 CSR 20-6.010)
    b. The Federal Clean Water Act provides that any person who knowingly makes any false statement, representation, or certification in any record or other document submitted or required to be maintained under this permit, including monitoring reports or reports of compliance or non-compliance shall, upon conviction, be punished by a fine of not more than $10,000 per violation, or by imprisonment for not more than six (6) months per violation, or by both.
    c. The Missouri Clean Water Law provides that any person who knowingly makes any false statement, representation or certification in any application, record, report, plan, or other document filed or required to be maintained pursuant to sections 644.006 to 644.141 shall, upon conviction, be punished by a fine of not more than ten thousand dollars, or by imprisonment for not more than six months, or by both.

14. **Severability.** The provisions of the permit are severable, and if any provision of the permit, or the application of any provision of the permit to any circumstance, is held invalid, the application of such provision to other circumstances, and the remainder of the permit, shall not be affected thereby.

STANDARD CONDITIONS FOR NPDES PERMITS
ISSUED BY
THE MISSOURI DEPARTMENT OF NATURAL RESOURCES
MISSOURI CLEAN WATER COMMISSION
REVISED
MAY 1, 2013

PART II - SPECIAL CONDITIONS – PUBLICLY OWNED TREATMENT WORKS
SECTION A – INDUSTRIAL USERS

**1. Definitions**

Definitions as set forth in the Missouri Clean Water Laws and approved by the Missouri Clean Water Commission shall apply to terms used herein.

Significant Industrial User (SIU). Except as provided in the *General Pretreatment Regulation* 10 CSR 20-6.100, the term Significant Industrial User means:

1. All Industrial Users subject to Categorical Pretreatment Standards; and
2. Any other Industrial User that: discharges an average of 25,000 gallons per day or more of process wastewater to the Publicly-Owned Treatment Works (POTW) (excluding sanitary, noncontact cooling and boiler blowdown wastewater); contributes a process wastestream which makes up 5 percent or more of the average dry weather hydraulic or organic capacity of the POTW treatment plant; or is designated as such by the Control Authority on the basis that the Industrial User has a reasonable potential for adversely affecting the POTW's or for violating any Pretreatment Standard or requirement.

Clean Water Act (CWA) is the the federal Clean Water Act of 1972, 33 U.S.C. § 1251 et seq. (2002).

**2. Identification of Industrial Discharges**

Pursuant to 40 CFR 122.44(j)(1), all POTWs shall identify, in terms of character and volume of pollutants, any Significant Industrial Users discharging to the POTW subject to Pretreatment Standards under section 307(b) of the CWA and 40 CFR 403.

**3. Application Information**

Applications for renewal or modification of this permit must contain the information about industrial discharges to the POTW pursuant to 40 CFR 122.21(j)(6)

**4. Notice to the Department**

Pursuant to 40 CFR 122.42(b), all POTWs must provide adequate notice of the following:

1. Any new introduction of pollutants into the POTW from an indirect discharger which would be subject to section 301 or 306 of CWA if it were directly discharging these pollutants; and
2. Any substantial change into the volume or character of pollutants being introduced into that POTW by a source introducing pollutants into the POTW at the time of issuance of the permit.
3. For purposes of this paragraph, adequate notice shall include information on:
   i. the quality and quantity of effluent introduced into the POTW, and
   ii. any anticipated impact of the change on the quantity or quality of effluent to be discharged from the POTW.

For POTWs without an approved pretreatment program, the notice of industrial discharges which was not included in the permit application shall be made as soon as practicable. For POTWs with an approved pretreatment program, notice is to be included in the annual pretreatment report required in the special conditions of this permit. Notice may be sent to:

Missouri Department of Natural Resources
Water Protection Program
Attn: Pretreatment Coordinator
P.O. Box 176
Jefferson City, MO 65102

# STANDARD CONDITIONS FOR NPDES PERMITS
# ISSUED BY
# THE MISSOURI DEPARTMENT OF NATURAL RESOURCES
# MISSOURI CLEAN WATER COMMISSION
# March 1, 2015

## PART III – SLUDGE AND BIOSOLIDS FROM DOMESTIC AND INDUSTRIAL WASTEWATER TREATMENT FACILITIES

### SECTION A – GENERAL REQUIREMENTS

1. This permit pertains to sludge requirements under the Missouri Clean Water Law and regulation for domestic wastewater and industrial process wastewater. This permit also incorporates applicable federal sludge disposal requirements under 40 CFR 503 for domestic wastewater. The Environmental Protection Agency (EPA) has principal authority for permitting and enforcement of the federal sludge regulations under 40 CFR 503 for domestic wastewater. EPA has reviewed and accepted these standard sludge conditions. EPA may choose to issue a separate sludge addendum to this permit or a separate federal sludge permit at their discretion to further address the federal requirements.
2. These PART III Standard Conditions apply only to sludge and biosolids generated at domestic wastewater treatment facilities, including public owned treatment works (POTW), privately owned facilities and sludge or biosolids generated at industrial facilities.
3. Sludge and Biosolids Use and Disposal Practices:
    a. The permittee is authorized to operate the sludge and biosolids treatment, storage, use, and disposal facilities listed in the facility description of this permit.
    b. The permittee shall not exceed the design sludge volume listed in the facility description and shall not use sludge disposal methods that are not listed in the facility description, without prior approval of the permitting authority.
    c. The permittee is authorized to operate the storage, treatment or generating sites listed in the Facility Description section of this permit.
4. Sludge Received from other Facilities:
    a. Permittees may accept domestic wastewater sludge from other facilities including septic tank pumpings from residential sources as long as the design sludge volume is not exceeded and the treatment facility performance is not impaired.
    b. The permittee shall obtain a signed statement from the sludge generator or hauler that certifies the type and source of the sludge
5. These permit requirements do not supersede nor remove liability for compliance with county and other local ordinances.
6. These permit requirements do not supersede nor remove liability for compliance with other environmental regulations such as odor emissions under the Missouri Air Pollution Control Law and regulations.
7. This permit may (after due process) be modified, or alternatively revoked and reissued, to comply with any applicable sludge disposal standard or limitation issued or approved under Section 405(d) of the Clean Water Act or under Chapter 644 RSMo.
8. In addition to STANDARD CONDITIONS, the Department may include sludge limitations in the special conditions portion or other sections of a site specific permit.
9. Alternate Limits in the Site Specific Permit.
   Where deemed appropriate, the Department may require an individual site specific permit in order to authorize alternate limitations:
    a. A site specific permit must be obtained for each operating location, including application sites.
    b. To request a site specific permit, an individual permit application, permit fee, and supporting documents shall be submitted for each operating location. This shall include a detailed sludge/biosolids management plan or engineering report.
10. Exceptions to these Standard Conditions may be authorized on a case-by-case basis by the Department, as follows:
    a. The Department will prepare a permit modification and follow permit notice provisions as applicable under 10 CSR 20-6.020, 40 CFR 124.10, and 40 CFR 501.15(a)(2)(ix)(E). This includes notification of the owner of the property located adjacent to each land application site, where appropriate.
    b. Exceptions cannot be granted where prohibited by the federal sludge regulations under 40 CFR 503.

## SECTION B – DEFINITIONS

1. Best Management Practices include agronomic loading rates, soil conservation practices and other site restrictions.
2. Biosolids means organic fertilizer or soil amendment produced by the treatment of domestic wastewater sludge.
3. Biosolids land application facility is a facility where biosolids are spread onto the land at agronomic rates for production of food or fiber. The facility includes any structures necessary to store the biosolids until soil, weather, and crop conditions are favorable for land application.
4. Class A biosolids means a material that has met the Class A pathogen reduction requirements or equivalent treatment by a Process to Further Reduce Pathogens (PFRP) in accordance with 40 CFR 503.
5. Class B biosolids means a material that has met the Class B pathogen reduction requirements or equivalent treatment by a Process to Significantly Reduce Pathogens (PFRP) in accordance with 40 CFR 503.
6. Domestic wastewater means wastewater originating from the sanitary conveniences of residences, commercial buildings, factories and institutions; or co-mingled sanitary and industrial wastewater processed by a (POTW) or a privately owned facility.
7. Industrial wastewater means any wastewater, also known as process water, not defined as domestic wastewater. Per 40 CFR Part 122, process water means any water which, during manufacturing or processing, comes into direct contact with or results from the production or use of any raw material, intermediate product, finished product, byproduct, or waste product.
8. Mechanical treatment plants are wastewater treatment facilities that use mechanical devices to treat wastewater, including septic tanks, sand filters, extended aeration, activated sludge, contact stabilization, trickling filters, rotating biological discs, and other similar facilities. It does not include wastewater treatment lagoons and constructed wetlands for wastewater treatment.
9. Operating location as defined in 10 CSR 20-2.010 is all contiguous lands owned, operated or controlled by one (1) person or by two (2) or more persons jointly or as tenants in common.
10. Plant Available Nitrogen (PAN) is the nitrogen that will be available to plants during the growing seasons after biosolids application.
11. Public contact site is land with a high potential for contact by the public. This includes, but is not limited to, public parks, ball fields, cemeteries, plant nurseries, turf farms, and golf courses.
12. Sludge is the solid, semisolid, or liquid residue removed during the treatment of wastewater. Sludge includes septage removed from septic tanks or equivalent facilities. Sludge does not include carbon coal byproducts (CCBs)
13. Sludge lagoon is part of a mechanical wastewater treatment facility. A sludge lagoon is an earthen basin that receives sludge that has been removed from a wastewater treatment facility. It does not include a wastewater treatment lagoon or sludge treatment units that are not a part of a mechanical wastewater treatment facility.
14. Septage is the material pumped from residential septic tanks and similar treatment works (with a design population of less than 150 people). The standard for biosolids from septage is different from other sludges.

## SECTION C – MECHANICAL WASTEWATER TREATMENT FACILITIES

1. Sludge shall be routinely removed from wastewater treatment facilities and handled according to the permit facility description and sludge conditions of this permit.
2. The permittee shall operate the facility so that there is no sludge discharged to waters of the state.
3. Mechanical treatment plants shall have separate sludge storage compartments in accordance with 10 CSR 20, Chapter 8. Failure to remove sludge from these storage compartments on the required design schedule is a violation of this permit.

## SECTION D – SLUDGE DISPOSED AT OTHER TREATMENT FACILITY OR CONTRACT HAULER

1. This section applies to permittees that haul sludge to another treatment facility for disposal or use contract haulers to remove and dispose of sludge.
2. Permittees that use contract haulers are responsible for compliance with all the terms of this permit including final disposal, unless the hauler has a separate permit for sludge or biosolids disposal issued by the Department; or the hauler transports the sludge to another permitted treatment facility.
3. Haulers who land apply septage must obtain a state permit.
4. Testing of sludge, other than total solids content, is not required if sludge is hauled to a municipal wastewater treatment facility or other permitted wastewater treatment facility, unless it is required by the accepting facility.

## SECTION E – INCINERATION OF SLUDGE

1. Sludge incineration facilities shall comply with the requirements of 40 CFR 503 Subpart E; air pollution control regulations under 10 CSR 10; and solid waste management regulations under 10 CSR 80.
2. Permittee may be authorized under the facility description of this permit to store incineration ash in lagoons or ash ponds. This permit does not authorize the disposal of incineration ash. Incineration ash shall be disposed in accordance with 10 CSR 80; or if the ash is determined to be hazardous with 10 CSR 25.
3. In addition to normal sludge monitoring, incineration facilities shall report the following as part of the annual report, quantity of sludge incinerated, quantity of ash generated, quantity of ash stored, and ash used or disposal method, quantity, and location. Permittee shall also provide the name of the disposal facility and the applicable permit number.

## SECTION F – SURFACE DISPOSAL SITES AND SLUDGE LAGOONS

1. Surface disposal sites of domestic facilities shall comply with the requirements in 40 CFR 503 Subpart C; air pollution control regulations under 10 CSR 10; and solid waste management regulations under 10 CSR 80.
2. Sludge storage lagoons are temporary facilities and are not required to obtain a permit as a solid waste management facility under 10 CSR 80. In order to maintain sludge storage lagoons as storage facilities, accumulated sludge must be removed routinely, but not less than once every two years unless an alternate schedule is approved in the permit. The amount of sludge removed will be dependent on sludge generation and accumulation in the facility. Enough sludge must be removed to maintain adequate storage capacity in the facility.
    a. In order to avoid damage to the lagoon seal during cleaning, the permittee may leave a layer of sludge on the bottom of the lagoon, upon prior approval of the Department; or
    b. Permittee shall close the lagoon in accordance with Section H.

## SECTION G – LAND APPLICATION

1. The permittee shall not land apply sludge or biosolids unless land application is authorized in the facility description or the special conditions of the issued NPDES permit.
2. Land application sites within a 20 miles radius of the wastewater treatment facility are authorized under this permit when biosolids are applied for beneficial use in accordance with these standard conditions unless otherwise specified in a site specific permit. If the permittee's land application site is greater than a 20 mile radius of the wastewater treatment facility, approval must be granted from the Department.
3. Land application shall not adversely affect a threatened or endangered species or its designated critical habitat.
4. Biosolids shall not be applied unless authorized in this permit or exempted under 10 CSR 20, Chapter 6.
    a. This permit does not authorize the land application of domestic sludge except for when sludge meets the definition of biosolids.
    b. This permit authorizes "Class A or B" biosolids derived from domestic wastewater and/or process water sludge to be land applied onto grass land, crop land, timber or other similar agricultural or silviculture lands at rates suitable for beneficial use as organic fertilizer and soil conditioner.
5. Public Contact Sites:

    Permittees who wish to apply Class A biosolids to public contact sites must obtain approval from the Department after two years of proper operation with acceptable testing documentation that shows the biosolids meet Class A criteria. A shorter length of testing will be allowed with prior approval from the Department. Authorization for land applications must be provided in the special conditions section of this permit or in a separate site specific permit.
    a. After Class B biosolids have been land applied, public access must be restricted for 12 months.
    b. Class B biosolids are only land applied to root crops, home gardens or vegetable crops whose edible parts will not be for human consumption.
6. Agricultural and Silvicultural Sites:

    Septage – Based on Water Quality guide 422 (WQ422) published by the University of Missouri
    a. Haulers that land apply septage must obtain a state permit
    b. Do not apply more than 30,000 gallons of septage per acre per year.
    c. Septage tanks are designed to retain sludge for one to three years which will allow for a larger reduction in pathogens and vectors, as compared to other mechanical type treatment facilities.
    d. To meet Class B sludge requirements, maintain septage at 12 pH for at least thirty (30) minutes before land application. 50 pounds of hydrated lime shall be added to each 1,000 gallons of septage in order to meet pathogen and vector stabilization for septage biosolids applied to crops, pastures or timberland.
    e. Lime is to be added to the pump truck and not directly to the septic tanks, as lime would harm the beneficial bacteria of the septic tank.

Biosolids - Based on Water Quality guide 423, 424, and 425 (WQ423, WQ424, WQ425) published by the University of Missouri;

a. Biosolids shall be monitored to determine the quality for regulated pollutants

b. The number of samples taken is directly related to the amount of sludge produced by the facility (See Section I of these Standard Conditions). Report as dry weight unless otherwise specified in the site specific permit. Samples should be taken only during land application periods. When necessary, it is permissible to mix biosolids with lower concentrations of biosolids as well as other suitable Department approved material to reach the maximum concentration of pollutants allowed.

c. Table 1 gives the maximum concentration allowable to protect water quality standards

**TABLE 1**

| Biosolids ceiling concentration [1] | |
|---|---|
| Pollutant | Milligrams per kilogram dry weight |
| Arsenic | 75 |
| Cadmium | 85 |
| Copper | 4,300 |
| Lead | 840 |
| Mercury | 57 |
| Molybdenum | 75 |
| Nickel | 420 |
| Selenium | 100 |
| Zinc | 7,500 |

[1] Land application is not allowed if the sludge concentration exceeds the maximum limits for any of these pollutants

d. The low metal concentration biosolids has reduced requirements because of its higher quality and can safely be applied for 100 years or longer at typical agronomic loading rates. (See Table 2)

**TABLE 2**

| Biosolids Low Metal Concentration [1] | |
|---|---|
| Pollutant | Milligrams per kilogram dry weight |
| Arsenic | 41 |
| Cadmium | 39 |
| Copper | 1,500 |
| Lead | 300 |
| Mercury | 17 |
| Nickel | 420 |
| Selenium | 36 |
| Zinc | 2,800 |

[1] You may apply low metal biosolids without tracking cumulative metal limits, provided the cumulative application of biosolids does not exceed 500 dry tons per acre.

e. Each pollutant in Table 3 has an annual and a total cumulative loading limit, based on the allowable pounds per acre for various soil categories.

**TABLE 3**

| Pollutant | CEC 15+ | | CEC 5 to 15 | | CEC 0 to 5 | |
|---|---|---|---|---|---|---|
| | Annual | Total [1] | Annual | Total [1] | Annual | Total [1] |
| Arsenic | 1.8 | 36.0 | 1.8 | 36.0 | 1.8 | 36.0 |
| Cadmium | 1.7 | 35.0 | 0.9 | 9.0 | 0.4 | 4.5 |
| Copper | 66.0 | 1,335.0 | 25.0 | 250.0 | 12.0 | 125.0 |
| Lead | 13.0 | 267.0 | 13.0 | 267.0 | 13.0 | 133.0 |
| Mercury | 0.7 | 15.0 | 0.7 | 15.0 | 0.7 | 15.0 |
| Nickel | 19.0 | 347.0 | 19.0 | 250.0 | 12.0 | 125.0 |
| Selenium | 4.5 | 89.0 | 4.5 | 44.0 | 1.6 | 16.0 |
| Zinc | 124.0 | 2,492.0 | 50.0 | 500.0 | 25.0 | 250.0 |

[1] Total cumulative loading limits for soils with equal or greater than 6.0 pH (salt based test) or 6.5 pH (water based test)

**TABLE 4** - Guidelines for land application of other trace substances [1]

| Cumulative Loading | |
|---|---|
| Pollutant | Pounds per acre |
| Aluminum | 4,000[2] |
| Beryllium | 100 |
| Cobalt | 50 |
| Fluoride | 800 |
| Manganese | 500 |
| Silver | 200 |
| Tin | 1,000 |
| Dioxin | (10 ppt in soil)[3] |
| Other | [4] |

[1] Design of land treatment systems for Industrial Waste, 1979. Michael Ray Overcash, North Carolina State University and Land Treatment of Municipal Wastewater, EPA 1981.)

[2] This applies for a soil with a pH between 6.0 and 7.0 (salt based test) or a pH between 6.5 to 7.5 (water based test). Case-by-case review is required for higher pH soils.

[3] Total Dioxin Toxicity Equivalents (TEQ) in soils, based on a risk assessment under 40 CFR 744, May 1998.

[4] Case by case review. Concentrations in sludge should not exceed the 95th percentile of the National Sewage Sludge Survey, EPA, January 2009.

Best Management Practices – Based on Water Quality guide 426 (WQ426) published by the University of Missouri

a. Use best management practices when applying biosolids.
b. Biosolids cannot discharge from the land application site
c. Biosolid application is subject to the Missouri Department of Agriculture State Milk Board concerning grazing restrictions of lactating dairy cattle.
d. Biosolid application must be in accordance with section 4 of the Endangered Species Act.
e. Do not apply more than the agronomic rate of nitrogen needed.
f. The applicator must document the Plant Available Nitrogen (PAN) loadings, available nitrogen in the soil, and crop removal when either of the following occurs: 1) When biosolids are greater than 50,000 mg/kg TN; or 2) When biosolids are land applied at an application rate greater than two dry tons per acre per year.
    i. PAN can be determined as follows and is in accordance with WQ426
    (Nitrate + nitrite nitrogen) + (organic nitrogen x 0.2) + (ammonia nitrogen x volatilization factor[1]).
    [1] Volatilization factor is 0.7 for surface application and 1 for subsurface application.
g. Buffer zones are as follows:
    i. 300 feet of a water supply well, sinkhole, lake, pond, water supply reservoir or water supply intake in a stream;
    ii. 300 feet of a losing stream, no discharge stream, stream stretches designated for whole body contact recreation, wild and scenic rivers, Ozark National Scenic Riverways or outstanding state resource waters as listed in the Water Quality Standards, 10 CSR 20-7.031;
    iii. 150 feet if dwellings;
    iv. 100 feet of wetlands or permanent flowing streams;
    v. 50 feet of a property line or other waters of the state, including intermittent flowing streams.
h. Slope limitation for application sites are as follows;
    i. A slope 0 to 6 percent has no rate limitation
    ii. Applied to a slope 7 to 12 percent, the applicator may apply biosolids when soil conservation practices are used to meet the minimum erosion levels
    iii. Slopes > 12 percent, apply biosolids only when grass is vegetated and maintained with at least 80 percent ground cover at a rate of two dry tons per acre per year or less.
i. No biosolids may be land applied in an area that it is reasonably certain that pollutants will be transported into waters of the state.
j. Do not apply biosolids to sites with soil that is snow covered, frozen or saturated with liquid without prior approval by the Department.
k. Biosolids / sludge applicators must keep detailed records up to five years.

## SECTION H – CLOSURE REQUIREMENTS

1. This section applies to all wastewater facilities (mechanical, industrial, and lagoons) and sludge or biosolids storage and treatment facilities and incineration ash ponds. It does not apply to land application sites.
2. Permittees of a domestic wastewater facility who plan to cease operation must obtain Department approval of a closure plan which addresses proper removal and disposal of all residues, including sludge, biosolids. Mechanical plants, sludge lagoons, ash ponds and other storage structures must obtain approval of a closure plan from the Department. Permittee must maintain this permit until the facility is closed in accordance with the approved closure plan per 10 CSR 20 – 6. 010 and 10 CSR 20 – 6.015.
3. Residuals that are left in place during closure of a lagoon or earthen structure or ash pond shall not exceed the agricultural loading rates as follows:
    a. Residuals shall meet the monitoring and land application limits for agricultural rates as referenced in Section H of these standard conditions.
    b. If a wastewater treatment lagoon has been in operation for 15 years or more without sludge removal, the sludge in the lagoon qualifies as a Class B biosolids with respect to pathogens due to anaerobic digestion, and testing for fecal coliform is not required. For other lagoons, testing for fecal coliform is required to show compliance with Class B biosolids limitations. In order to reach Class B biosolids requirements, fecal coliform must be less than 2,000,000 colony forming units or 2,000,000 most probable number. All fecal samples must be presented as geometric mean per gram.
    c. The allowable nitrogen loading that may be left in the lagoon shall be based on the plant available nitrogen (PAN) loading. For a grass cover crop, the allowable PAN is 300 pounds/acre.
        i. PAN can be determined as follows:

        (Nitrate + nitrite nitrogen) + (organic nitrogen x 0.2) + (ammonia nitrogen x volatilization factor[1]).

        [1] Volatilization factor is 0.7 for surface application and 1 for subsurface application.
4. When closing a domestic wastewater treatment lagoon with a design treatment capacity equal or less than 150 persons, the residuals are considered "septage" under the similar treatment works definition. See Section B of these standard conditions. Under the septage category, residuals may be left in place as follows:
    a. Testing for metals or fecal coliform is not required
    b. If the wastewater treatment lagoon has been in use for less than 15 years, mix lime with the sludge at a rate of 50 pounds of hydrated lime per 1000 gallons (134 cubic feet) of sludge.
    c. The amount of sludge that may be left in the lagoon shall be based on the plant available nitrogen (PAN) loading. 100 dry tons/acre of sludge may be left in the basin without testing for nitrogen. If 100 dry tons/acre or more will be left in the lagoon, test for nitrogen and determine the PAN using the calculation above. Allowable PAN loading is 300 pounds/acre.
5. Residuals left within the domestic lagoon shall be mixed with soil on at least a 1 to 1 ratio, the lagoon berm shall be demolished, and the site shall be graded and contain ≥70% vegetative density over 100% of the site so as to avoid ponding of storm water and provide adequate surface water drainage without creating erosion.
6. Lagoons and/or earthen structure and/or ash pond closure activities shall obtain a storm water permit for land disturbance activities that equal or exceed one acre in accordance with 10 CSR 20-6.200
7. When closing a mechanical wastewater and/or industrial process wastewater plant; all sludge must be cleaned out and disposed of in accordance with the Department approved closure plan before the permit for the facility can be terminated.
    a. Land must be stabilized which includes any grading, alternate use or fate upon approval by the Department, remediation, or other work that exposes sediment to stormwater per 10 CSR 20-6.200. The site shall be graded and contain ≥70% vegetative density over 100% of the site, so as to avoid ponding of storm water and provide adequate surface water drainage without creating erosion.
    b. Per 10 CSR 20-6.015(4)(B)6, Hazardous Waste shall not be land applied or disposed during industrial and mechanical plant closures unless in accordance with Missouri Hazardous Waste Management Law and Regulations under 10 CSR 25.
    c. After demolition of the mechanical plant / industrial plant, the site must only contain clean fill defined in RSMo 260.200 (5) as uncontaminated soil, rock, sand, gravel, concrete, asphaltic concrete, cinderblocks, brick, minimal amounts of wood and metal, and inert solids as approved by rule or policy of the Department for fill or other beneficial use. Other solid wastes must be removed.
8. If sludge from the domestic lagoon or mechanical treatment plant exceeds agricultural rates under Section G and/or H, a landfill permit or solid waste disposal permit must be obtained if the permittee chooses to seek authorization for on-site sludge disposal under the Missouri Solid Waste Management Law and regulations per 10 CSR 80, and the permittee must comply with the surface disposal requirements under 40 CFR 503, Subpart C.

## SECTION I – MONITORING FREQUENCY

1. At a minimum, sludge or biosolids shall be tested for volume and percent total solids on a frequency that will accurately represent sludge quantities produced and disposed. Please see the table below.

**TABLE 5**

| Design Sludge Production (dry tons per year) | Monitoring Frequency (See Notes 1, 2, and 3) | | | |
|---|---|---|---|---|
| | Metals, Pathogens and Vectors | Nitrogen TKN [1] | Nitrogen PAN [2] | Priority Pollutants and TCLP [3] |
| 0 to 100 | 1 per year | 1 per year | 1 per month | 1 per year |
| 101 to 200 | biannual | biannual | 1 per month | 1 per year |
| 201 to 1,000 | quarterly | quarterly | 1 per month | 1 per year |
| 1,001 to 10,000 | 1 per month | 1 per month | 1 per week | --[4] |
| 10,001 + | 1 per week | 1 per week | 1 per day | --[4] |

[1] Test total Kjeldahl nitrogen, if biosolids application is 2 dry tons per acre per year or less.
[2] Calculate plant available nitrogen (PAN) when either of the following occurs: 1) when biosolids are greater than 50,000 mg/kg TN; or 2) when biosolids are land applied at an application rate greater than two dry tons per acre per year.
[3] Priority pollutants (40 CFR 122.21, Appendix D, Tables II and III) and toxicity characteristic leaching procedure (40 CFR 261.24) is required only for permit holders that must have a pre-treatment program.
[4] One sample for each 1,000 dry tons of sludge.

Note 1: Total solids: A grab sample of sludge shall be tested one per day during land application periods for percent total solids. This data shall be used to calculate the dry tons of sludge applied per acre.
Note 2: Total Phosphorus: Total phosphorus and total potassium shall be tested at the same monitoring frequency as metals.
Note 3: Table 5 is not applicable for incineration and permit holders that landfill their sludge.

2. If you own a wastewater treatment lagoon or sludge lagoon that is cleaned out once a year or less, you may choose to sample only when the sludge is removed or the lagoon is closed. Test one composite sample for each 100 dry tons of sludge or biosolids removed from the lagoon during the year within the lagoon at closing. Composite sample must represent various areas at one-foot depth.
3. Additional testing may be required in the special conditions or other sections of the permit. Permittees receiving industrial wastewater may be required to conduct additional testing upon request from the Department.
4. At this time, the Department recommends monitoring requirements shall be performed in accordance with, "POTW Sludge Sampling and Analysis Guidance Document," United States Environmental Protection Agency, August 1989, and the subsequent revisions.

## SECTION J – RECORD KEEPING AND REPORTING REQUIREMENTS

1. The permittee shall maintain records on file at the facility for at least five years for the items listed in these standard conditions and any additional items in the Special Conditions section of this permit. This shall include dates when the sludge facility is checked for proper operation, records of maintenance and repairs and other relevant information.
2. Reporting period
   a. By January 28th of each year, an annual report shall be submitted for the previous calendar year period for all mechanical wastewater treatment facilities, sludge lagoons, and sludge or biosolids disposal facilities.
   b. Permittees with wastewater treatment lagoons shall submit the above annual report only when sludge or biosolids are removed from the lagoon during the report period or when the lagoon is closed.
3. Report Forms. The annual report shall be submitted on report forms provided by the Department or equivalent forms approved by the Department.
4. Reports shall be submitted as follows:

   Major facilities (those serving 10,000 persons or 1 million gallons per day) shall report to both the Department and EPA. Other facilities need to report only to the Department. Reports shall be submitted to the addresses listed as follows:

   DNR regional office listed in your permit
   (see cover letter of permit)
   ATTN: Sludge Coordinator

   EPA Region VII
   Water Compliance Branch (WACM)
   Sludge Coordinator
   11201 Renner Blvd.
   Lenexa, KS 66219

5. Annual report contents. The annual report shall include the following:
    a. Sludge and biosolids testing performed. Include a copy or summary of all test results, even if not required by the permit.
    b. Sludge or biosolids quantity shall be reported as dry tons for quantity generated by the wastewater treatment facility, the quantity stored on site at the end of the year, and the quantity used or disposed.
    c. Gallons and % solids data used to calculate the dry ton amounts.
    d. Description of any unusual operating conditions.
    e. Final disposal method, dates, and location, and person responsible for hauling and disposal.
        i. This must include the name, address for the hauler and sludge facility. If hauled to a municipal wastewater treatment facility, sanitary landfill, or other approved treatment facility, give the name of that facility.
        ii. Include a description of the type of hauling equipment used and the capacity in tons, gallons, or cubic feet.
    f. Contract Hauler Activities:
    If contract hauler, provide a copy of a signed contract from the contractor. Permittee shall require the contractor to supply information required under this permit for which the contractor is responsible. The permittee shall submit a signed statement from the contractor that he has complied with the standards contained in this permit, unless the contract hauler has a separate sludge or biosolids use permit.
    g. Land Application Sites:
        i. Report the location of each application site, the annual and cumulative dry tons/acre for each site, and the landowners name and address. The location for each spreading site shall be given as a legal description for nearest ¼, ¼, Section, Township, Range, and county, or UTM coordinates. The facility shall report PAN when either of the following occurs: 1) When biosolids are greater than 50,000 mg/kg TN; or 2) when biosolids are land applied at an application rate greater than two dry tons per acre per year.
        ii. If the “Low Metals” criteria are exceeded, report the annual and cumulative pollutant loading rates in pounds per acre for each applicable pollutant, and report the percent of cumulative pollutant loading which has been reached at each site.
        iii. Report the method used for compliance with pathogen and vector attraction requirements.
        iv. Report soil test results for pH, CEC, and phosphorus. If none was tested during the year, report the last date when tested and results.

JUN 01 2015

MISSOURI DEPARTMENT OF NATURAL RESOURCES
WATER PROTECTION PROGRAM, WATER POLLUTION CONTROL BRANCH

# FORM B2 – APPLICATION FOR OPERATING PERMIT FOR FACILITIES THAT RECEIVE PRIMARILY DOMESTIC WASTE AND HAVE A DESIGN FLOW MORE THAN 100,000 GALLONS PER DAY

| FACILITY NAME | |
|---|---|
| Waynesville Wastewater Treatment Facility | |
| PERMIT NO. | COUNTY |
| Mo. - 0094161 | Pulaski |

## APPLICATION OVERVIEW

Form B2 has been developed in a modular format and consists of Parts A, B and C and a Supplemental Application Information (Parts D, E, F and G) packet. All applicants must complete Parts A, B and C. Some applicants must also complete parts of the Supplemental Application Information packet. The following items explain which parts of Form B2 you must complete. Submittal of an incomplete application may result in the application being returned.

## BASIC APPLICATION INFORMATION

A. Basic Application Information for all Applicants. All applicants must complete Part A.

B. Additional Application Information for all Applicants. All applicants must complete Part B.

C. Certification. All applicants must complete Part C.

## SUPPLEMENTAL APPLICATION INFORMATION

D. Expanded Effluent Testing Data. A treatment works that discharges effluent to surface water of the United States and meets one or more of the following criteria must complete *Part D - Expanded Effluent Testing Data*:

1. Has a design flow rate greater than or equal to 1 million gallons per day.
2. Is required to have or currently has a pretreatment program.
3. Is otherwise required by the permitting authority to provide the information.

E. Toxicity Testing Data. A treatment works that meets one or more of the following criteria must complete *Part E - Toxicity Testing Data*:

1. Has a design flow rate greater than or equal to 1 million gallons per day.
2. Is required to have or currently has a pretreatment program.
3. Is otherwise required by the permitting authority to provide the information.

F. Industrial User Discharges and Resource Conservation and Recovery Act / Comprehensive Environmental Response, Compensation and Liability Act Wastes. A treatment works that accepts process wastewater from any significant industrial users, also known as SIUs, or receives a Resource Conservation and Recovery Act or CERCLA wastes must complete *Part F - Industrial User Discharges and Resource Conservation and Recovery Act /CERCLA Wastes.*

SIUs are defined as:

1. All Categorical Industrial Users, or CIUs, subject to Categorical Pretreatment Standards under 40 Code of Federal Regulations 403.6 and 40 Code of Federal Regulations 403.6 and 40 CFR Chapter 1, Subchapter N.
2. Any other industrial user that meets one or more of the following:
   - i. Discharges an average of 25,000 gallons per day or more of process wastewater to the treatment works (with certain exclusions).
   - ii. Contributes a process waste stream that makes up five percent or more of the average dry weather hydraulic or organic capacity of the treatment plant.
   - iii. Is designated as an SIU by the control authority.
   - iv. Is otherwise required by the permitting authority to provide the information.

G. Combined Sewer Systems. A treatment works that has a combined sewer system must complete *Part G - Combined Sewer Systems.*

**ALL APPLICANTS MUST COMPLETE PARTS A, B and C**



SE Pulaski

MISSOURI DEPARTMENT OF NATURAL RESOURCES
WATER PROTECTION PROGRAM, WATER POLLUTION CONTROL BRANCH

AP21321

# FORM B2 – APPLICATION FOR AN OPERATING PERMIT FOR FACILITIES THAT RECEIVE PRIMARILY DOMESTIC WASTE AND HAVE A DESIGN FLOW MORE THAN 100,000 GALLONS PER DAY

| FOR AGENCY USE ONLY | |
|---|---|
| CHECK NUMBER | |
| DATE RECEIVED 6/1/15 | FEE SUBMITTED $ |

## PART A – BASIC APPLICATION INFORMATION

**1. THIS APPLICATION IS FOR:**

☐ An operating permit for a new or unpermitted facility. Construction Permit # _____
(Please include completed Antidegradation Review or request to conduct an Antidegradation Review, see instructions)
☒ An operating permit renewal: Permit #MO- 0094161 Expiration Date 2-16-2016
☐ An operating permit modification: Permit #MO-_____ Reason: _____

1.1 Is the appropriate fee included with the application (see instructions for appropriate fee)? ☐ YES ☐ NO

**2. FACILITY**

| NAME | | TELEPHONE NUMBER WITH AREA CODE | |
|---|---|---|---|
| Waynesville Wastewater Treatment Facility | | (573) 774-2552 | |
| ADDRESS (PHYSICAL) | CITY | STATE | ZIP |
| 405 Pine St. | Waynesville | Mo. | 65583 |

2.1 **LEGAL DESCRIPTION** (Facility Site): ¼ S/W ¼ N/E ¼ Sec. 24, T36N, R12W COUNTY Pulaski

2.2 UTM Coordinates Easting (X): 92° 11' 55" W Northing (Y): 37° 50' 03" N
*For Universal Transverse Mercator (UTM), Zone 15 North referenced to North American Datum 1983 (NAD83)*

2.3 Name of receiving stream: Roubidoux Creek

2.4 Number of Outfalls: 2 wastewater outfalls, stormwater outfalls, instream monitoring sites

**3. OWNER**

| NAME | E-MAIL ADDRESS | TELEPHONE NUMBER WITH AREA CODE | |
|---|---|---|---|
| City of Waynesville | wastewater@waynesvillemo.org | (573) 774-2552 | |
| ADDRESS | CITY | STATE | ZIP |
| 601 Historic Rt. 66 W | Waynesville | Mo. | 65583 |

3.1 Request review of draft permit prior to Public Notice? ☐ YES ☐ NO
3.2 Are you a Publically Owned Treatment Works (POTW)? ☒ YES ☐ NO
3.3 Are you a Privately Owned Treatment Facility? ☐ YES ☐ NO
3.4 Are you a Privately Owned Treatment Facility regulated by the Public Service Commission (PSC)? ☐ YES ☐ NO

**4. CONTINUING AUTHORITY: Permanent organization which will serve as the continuing authority for the operation, maintenance and modernization of the facility.**

| NAME | EMAIL ADDRESS | TELEPHONE WITH AREA CODE | |
|---|---|---|---|
| City of Waynesville | wastewater@waynesvillemo.org | (573) 774-2552 | |
| ADDRESS | CITY | STATE | ZIP |
| 601 Historic Rt. 66 | Waynesville | Mo. | 65583 |

If the Continuing Authority is different than the Owner, please include a copy of the contract agreement between the two parties and a description of the responsibilities of both parties within the agreement.

**5. OPERATOR**

| NAME | TITLE | CERTIFICATE NUMBER (IF APPLICABLE) |
|---|---|---|
| Terry Reeves | Operator | B-8945 |
| E-MAIL ADDRESS | TELEPHONE NUMBER WITH AREA CODE | |
| wastewater@waynesvillemo.org | (573) 774-2552 | |

**6. FACILITY CONTACT**

| NAME | TITLE | | |
|---|---|---|---|
| Terry Reeves | Operator | | |
| E-MAIL ADDRESS | TELEPHONE NUMBER WITH AREA CODE | | |
| wastewater@waynesvillemo.org | (573) 774-2552 | | |
| ADDRESS | CITY | STATE | ZIP CODE |
| 601 Historic Rt. 66 | Waynesville | Mo. | 65583 |

*CITY OF WAYNESVILLE, MISSOURI*

*WAYNESVILLE WASTEWATER TREATMENT FACILITY*
*PERMIT NO. MO-0094161*

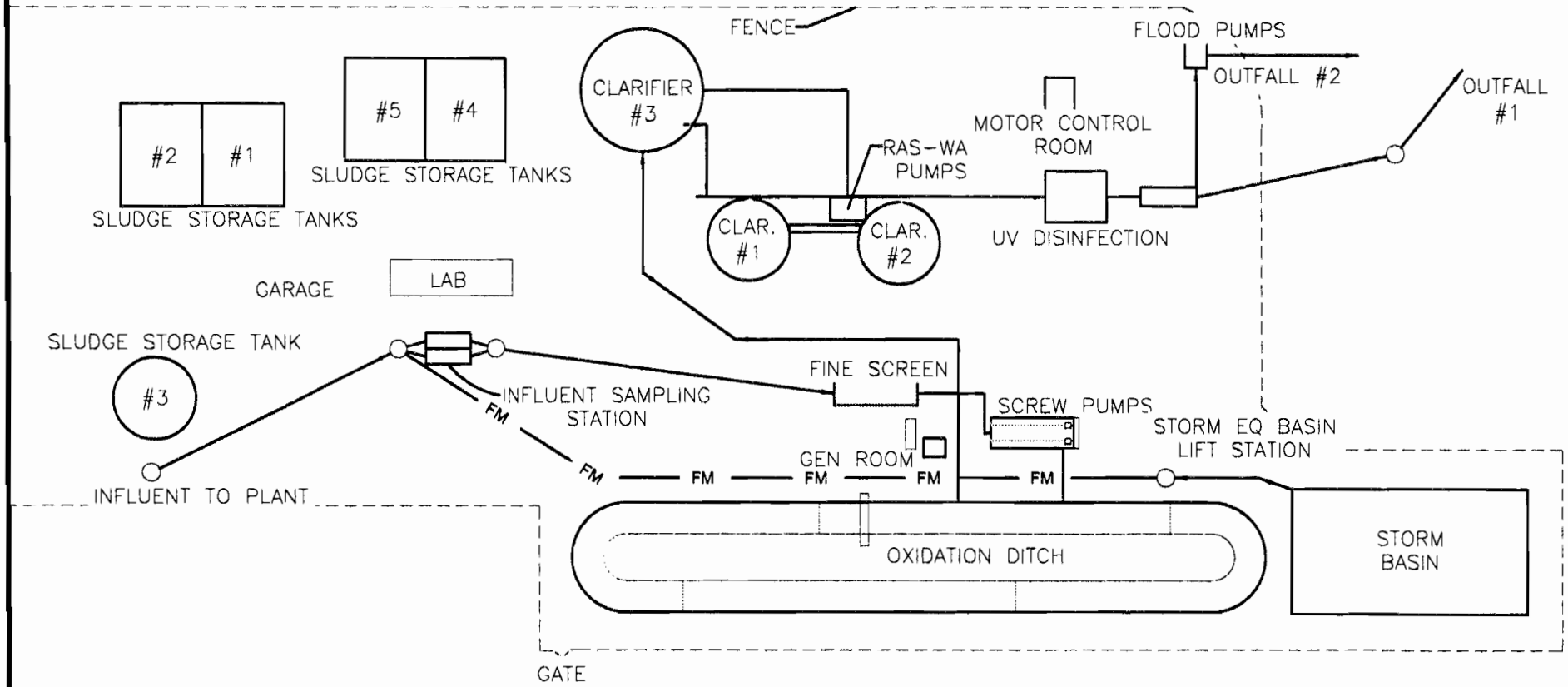


PINE ST.

WAYNESVILLE

| No | DATE | BY | REVISION |
|---|---|---|---|

JD-MC LLC
Engineering • Land Development
11222 Chicago Road
Devin, Missouri 65456
Phone: 573-526-1867 Fax: 573-759-3761

CITY OF WAYNESVILLE, MO
WAYNESVILLE WWTF
PERMIT NO. MO-0094161

PROCESS FLOW DIAGRAM SCHEMATIC

| DRAWN BY: | DRAWING SCALE: N.T.S. | DRAWING NO.: 7.1 |
|---|---|---|
| CHECKED BY: | DATE: | |

7.1

| FACILITY NAME | PERMIT NO. | OUTFALL NO. |
|---|---|---|
| Waynesville WWTF | MO-0094161 | 1 + 2 |

**PART A – BASIC APPLICATION INFORMATION**

**7. FACILITY INFORMATION**

**7.1 Process Flow Diagram or Schematic.** Provide a diagram showing the processes of the treatment plant. Show all of the treatment units, including disinfection (e.g. – Chlorination and Dechlorination), influents, and outfalls. Indicate any treatment process changes in the routing of wastewater during dry weather and peak wet weather. Include a brief narrative description of the diagram. Attach sheets as necessary.

See Drawing

*CITY OF WAYNESVILLE, MISSOURI*
*FACILITY INFORMATION*

*WAYNESVILLE WASTEWATER TREATMENT FACILITY*
*PERMIT NO. MO-0094161*

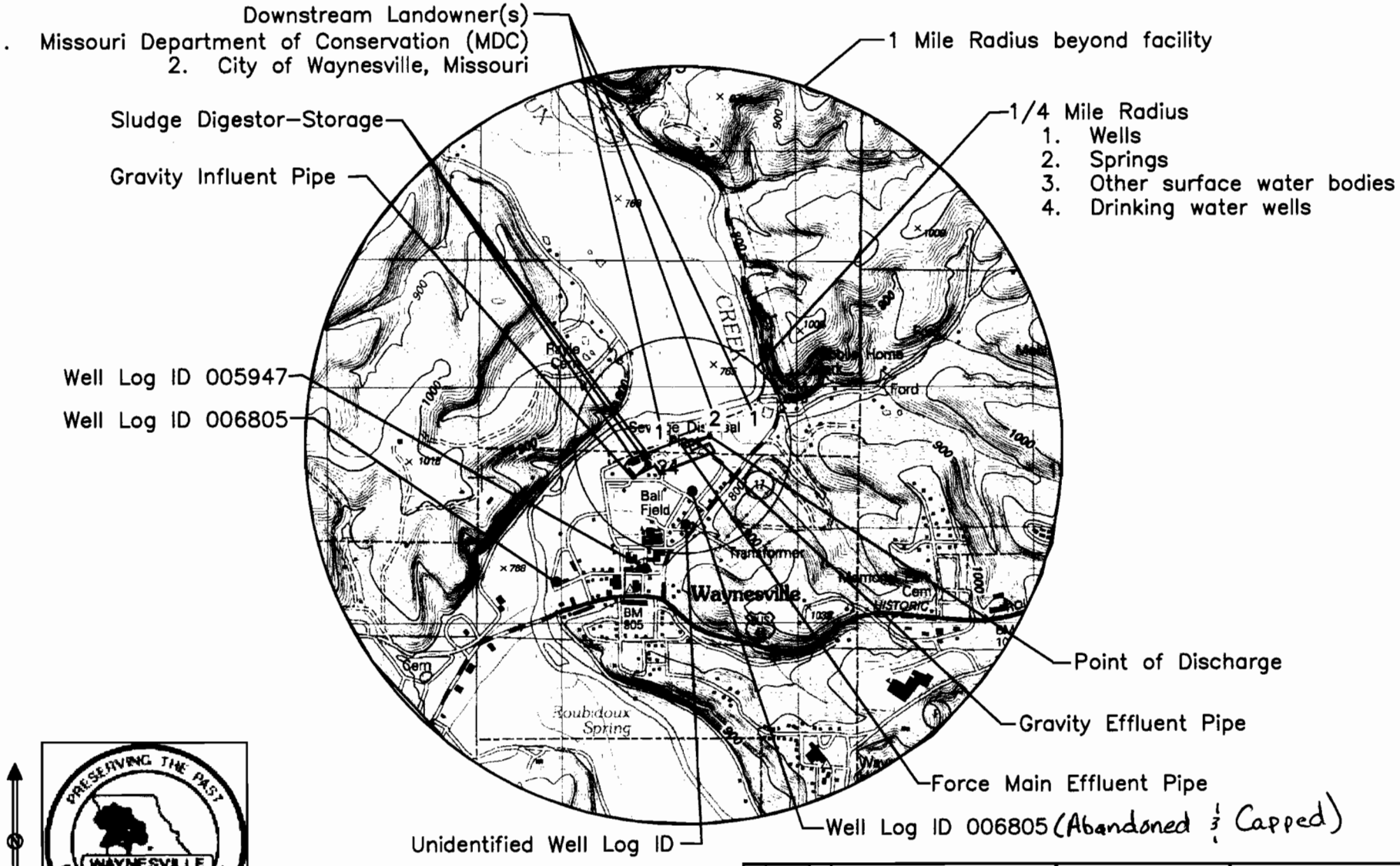


PRESERVING THE PAST
WAYNESVILLE
PLANNING FOR THE FUTURE

| No. | DATE | BY | REVISION |
|---|---|---|---|

JD-MC LLC
Engineering • Land Development
11222 Chicago Road
Dixon, Missouri 65459
Phone: 573.578.1867 Fax: 573.759.2781

CITY OF WAYNESVILLE, MO
WAYNESVILLE WWTF
PERMIT NO. MO-0094161

FACILITY INFORMATION

DRAWN BY: | DRAWING SCALE: N.T.S. | DRAWING NO.: 7.2
CHECKED BY: | DATE:

UNIVERSITY OF MISSOURI Extension

# Soil Test Report

## Field Crops

**Soil & Plant Testing Laboratory**
23 Mumford Hall, MU
Columbia, MO 65211
Phone: 573-882-0623
E-mail: SoilTestingServices@missouri.edu

**Soil Testing Laboratory**
P.O. Box 160
Portageville, MO 63873
Phone: 573-379-5431
E-mail: drstl@missouri.edu

**http://soiltest.psu.missouri.edu**

| FIELD INFORMATION | | | |
|---|---|---|---|
| Field ID | LAUGHLIN | Sample no. | 1 |
| Acres 45 | Last limed unknown | Irrigated | no |
| Last crop | | | |

Bill:Pulaski
FSA Copy: N

| | | | |
|---|---|---|---|
| Serial no. | S23025--1 | Lab no. | C1215067 |
| County | Pulaski | Region | 7 |
| Submitted | 6/25/2012 | Processed | 7/3/2012 |

Soil sample submitted by: Firm Outlet

This report is for:
CITY OF WAYNESVILLE
601 HISTORIC 66 W
WAYNESVILLE MO 65583

| SOIL TEST INFORMATION | | | RATING | | | | | |
|---|---|---|---|---|---|---|---|---|
| | | | Very low | Low | Medium | High | Very high | Excess |
| $pH_s$ | (salt pH) | 6.7 | ********** | | | | | |
| Phosphorus | (P) | 137 lbs/a | ********** | ********** | ********** | ********** | ********** | |
| Potassium | (K) | 414 lbs/a | ********** | ********** | ********** | ********** | | |
| Calcium | (Ca) | 3883 lbs/a | ********** | ********** | ********** | | | |
| Magnesium | (Mg) | 1000 lbs/a | ********** | ********** | ********** | ********** | | |
| Sulfur | ($SO_4$-S) | ppm | | | | | | |
| Zinc | (Zn) | ppm | | | | | | |
| Manganese | (Mn) | ppm | | | | | | |
| Iron | (Fe) | ppm | | | | | | |
| Copper | (Cu) | ppm | | | | | | |

| | | | | | |
|---|---|---|---|---|---|
| Organic matter | 4.8 % | Neutralizable acidity | 0.5 meq/100g | Cation exchange capacity | 14.9 meq/100g |
| pH in water | | Electrical conductivity | mmho/cm | Sodium (Na) | lb/a |
| Nitrate ($NO_3$-N) | Topsoil ppm | Subsoil ppm | Sampling depth | Top inches | Subsoil inches |

| Cropping options | Yield goal | NUTRIENT REQUIREMENTS Pounds per acre N | $P_2O_5$ | $K_2O$ | Zn | S |
|---|---|---|---|---|---|---|
| 16 CLOVER/CL-GRASS HAY | 3 T/A | 0 | 0 | 0 | | |
| 17 CLOVER/CL-GRASS PAST | 150 CD/A | 0 | 0 | 0 | | |
| | | | | | | |
| | | | | | | |

| LIMESTONE SUGGESTIONS | |
|---|---|
| Effective neutralizing material (ENM) | 0 |
| Effective magnesium (EMg) | 0 |

Comments:
The herbicide labels list restrictions based on soil pH in water. This sample has an estimated pH in water of 7.2 . Use this estimated pH in water as a guide. If you wish to have soil pH in water analyzed, contact your dealer or Extension specialist listed below.

If no P2O5 or no K2O is recommended retest annually to determine when maintenance fertilizer should be applied.

Regional Agronomy Specialist Ed Brown Phone (573) 369-2394 Signature Edward A. Brown

*White* - Farmer, *Yellow* - FSA, *Blue* - Firm, *Pink* - Extension MP 189 Revised 9/05, Reprinted 9/11 Columbia

UNIVERSITY OF MISSOURI Extension

# Soil Test Report

## Field Crops

**Soil & Plant Testing Laboratory**
23 Mumford Hall, MU
Columbia, MO 65211
Phone: 573-882-0623
E-mail: SoilTestingServices@missouri.edu

**Soil Testing Laboratory**
P.O. Box 160
Portageville, MO 63873
Phone: 573-379-5431
E-mail: drstl@missouri.edu

**http://soiltest.psu.missouri.edu**

| FIELD INFORMATION | | | |
|---|---|---|---|
| Field ID JIM | | Sample no. 2 | |
| Acres 45 | Last limed unknown | Irrigated no | |
| Last crop | | | |

Bill:Pulaski
FSA Copy: N

| | | | |
|---|---|---|---|
| Serial no. 523025-2 | | Lab no. C1215068 | |
| County Pulaski | | Region 7 | |
| Submitted 6/25/2012 | | Processed 7/3/201 | |

Soil sample submitted by: Firm Outlet

This report is for:
CITY OF WAYNESVILLE
601 HISTORIC 66 W
WAYNESVILLE MO 65583

| SOIL TEST INFORMATION | | | RATING | | | | | |
|---|---|---|---|---|---|---|---|---|
| | | | Very low | Low | Medium | High | Very high | Excess |
| $pH_s$ | (salt pH) | 5.6 | ********** | | | | | |
| Phosphorus | (P) | 136 lbs/a | ********** | ********** | ********** | ********** | ********** | ********** |
| Potassium | (K) | 388 lbs/a | ********** | ********** | ********** | ********** | ********** | ********** |
| Calcium | (Ca) | 2345 lbs/a | ********** | ********** | ********** | ********** | ********** | ********** |
| Magnesium | (Mg) | 530 lbs/a | ********** | ********** | ********** | ********** | ********** | ********** |
| Sulfur | ($SO_4$-S) | ppm | | | | | | |
| Zinc | (Zn) | ppm | | | | | | |
| Manganese | (Mn) | ppm | | | | | | |
| Iron | (Fe) | ppm | | | | | | |
| Copper | (Cu) | ppm | | | | | | |

| | | | | | |
|---|---|---|---|---|---|
| Organic matter | 4.6 % | Neutralizable acidity | 3.5 meq/100g | Cation exchange capacity | 12.1 meq/100g |
| pH in water | | Electrical conductivity | mmho/cm | Sodium (Na) | lb/a |
| Nitrate ($NO_3$-N) | Topsoil ppm | Subsoil ppm | Sampling depth Top inches | Subsoil | inches |

| Cropping options | Yield goal | NUTRIENT REQUIREMENTS Pounds per acre N | $P_2O_5$ | $K_2O$ | Zn | S |
|---|---|---|---|---|---|---|
| 16 CLOVER/CL-GRASS HAY | 3 T/A | 0 | 0 | 0 | | |
| 17 CLOVER/CL-GRASS PAST | 150 CD/A | 0 | 0 | 0 | | |
| | | | | | | |
| | | | | | | |

| LIMESTONE SUGGESTIONS ✓ | |
|---|---|
| Effective neutralizing material (ENM) | 990 |
| Effective magnesium (EMg) | 0 |

Comments:

Some herbicide labels list restrictions based on soil pH in water. This sample has an estimated pH in water of 6.1 . Use this estimated pH in water as a guide. If you wish to have soil pH in water analyzed, contact your dealer or Extension specialist listed below.

If no P2O5 or no K2O is recommended retest annually to determine when maintenance fertilizer should be applied.

To determine limestone needed in tons/acre, divide your ENM requirement by the guarantee of your limestone dealer.

Regional Agronomy Specialist Ed Brown Phone (573) 369-2394 Edward A. Brown

Signature Columbia

*White* - Farmer, *Yellow* - FSA, *Blue* - Firm, *Pink* - Extension

MP 189 Revised 9/05, Reprinted 9/11

University of Missouri, Lincoln University, U.S. Department of Agriculture & Local University Extension Councils cooperating

| FACILITY NAME | PERMIT NO. | OUTFALL NO. |
|---|---|---|
| Waynesville WWTF | MO-0094161 | 1 |

**PART A – BASIC APPLICATION INFORMATION**

**7. FACILITY INFORMATION (continued)**

**7.2 Topographic Map.** Attach to this application a topographic map of the area extending at least one mile beyond facility property boundaries. This map must show the outline of the facility and the following information.

a. The area surrounding the treatment plant, including all unit processes.
b. The location of the downstream landowner(s). (See Item 10.)
c. The major pipes or other structures through which wastewater enters the treatment works and the pipes or other structures through which treated wastewater is discharged from the treatment plant. Include outfalls from bypass piping, if applicable.
d. The actual point of discharge. See Attached Drawing
e. Wells, springs, other surface water bodies and drinking water wells that are: 1) within ¼ mile of the property boundaries of the treatment works, and 2) listed in public record or otherwise known to the applicant.
f. Any areas where the sewage sludge produced by the treatment works is stored, treated, or disposed.
g. If the treatment works receives waste that is classified as hazardous under the Resource Conservation and Recovery Act (RCRA) by truck, rail, or special pipe, show on the map where that hazardous waste enters the treatment works and where it is treated, stored, or disposed.

**7.3** Facility SIC Code: 4952 | Discharge SIC Code: 4952

**7.4** Number of people presently connected or population equivalent (P.E.): 6592 Design P.E. 12,500

**7.5** Connections to the facility:

Number of units presently connected:

Homes 2066 Trailers 40 Apartments 350 Other (including industrial) 167

Number of Commercial Establishments: ____

**7.6** Design Flow 1,250,000 GPD | Actual Flow 672,912 GPD

**7.7** Will discharge be continuous through the year? Yes ☒ No ☐

Discharge will occur during the following months: How many days of the week will discharge occur?

**7.8** Is industrial waste discharged to the facility? Yes ☐ No ☒

If yes, please describe the number and types of industries that discharge to your facility.

Refer to the APPLICATION OVERVIEW to determine whether additional information is needed for Part F.

**7.9** Does the facility accept or process leachate from landfills?: Yes ☐ No ☒

**7.10** Is wastewater land applied? Yes ☒ No ☐

If yes, is Form I attached? Yes ☐ No ☐

**7.11** Does the facility discharge to a losing stream or sinkhole? Yes ☐ No ☒

**7.12** Has a wasteload allocation study been completed for this facility? Yes ☒ No ☐

**8. LABORATORY CONTROL INFORMATION**

LABORATORY WORK CONDUCTED BY PLANT PERSONNEL

| | | |
|---|---|---|
| Lab work conducted outside of plant. | Yes ☒ | No ☐ |
| Push–button or visual methods for simple test such as pH, settleable solids. | Yes ☒ | No ☐ |
| Additional procedures such as Dissolved Oxygen, Chemical Oxygen Demand, Biological Oxygen Demand, titrations, solids, volatile content. | Yes ☒ | No ☐ |
| More advanced determinations such as BOD seeding procedures, fecal coliform, nutrients, total oils, phenols, etc. | Yes ☒ | No ☐ |
| Highly sophisticated instrumentation, such as atomic absorption and gas chromatograph. | Yes ☐ | No ☒ |

| FACILITY NAME | PERMIT NO. | OUTFALL NO. |
|---|---|---|
| Waynesville WWTF | MO- 0094161 | 1 |

**PART A – BASIC APPLICATION INFORMATION**

**9. SLUDGE HANDLING, USE AND DISPOSAL**

**9.1** Is the sludge a hazardous waste as defined by 10 CSR 25? Yes ☐ No ☒

**9.2** Sludge production (Including sludge received from others): Design Dry Tons/Year 250 Actual Dry Tons/Year 120

**9.3** Sludge storage provided: 83,000 Cubic feet; 120 Days of storage; 2.4 Average percent solids of sludge;

☐ No sludge storage is provided. ☐ Sludge is stored in lagoon.

**9.4** Type of storage:
☒ Holding Tank ☐ Building
☐ Basin ☐ Lagoon
☐ Concrete Pad ☐ Other (Please describe) _____

**9.5** Sludge Treatment:
☐ Anaerobic Digester ☒ Storage Tank ☐ Lime Stabilization ☐ Lagoon
☐ Aerobic Digester ☐ Air or Heat Drying ☐ Composting ☐ Other (Attach Description)

**9.6** Sludge use or disposal:
☒ Land Application ☐ Contract Hauler ☐ Hauled to Another Treatment Facility ☐ Solid Waste Landfill
☐ Surface Disposal (Sludge Disposal Lagoon, Sludge Held For More Than Two Years) ☐ Incineration
☐ Other (Attach Explanation Sheet) _____

**9.7** Person responsible for hauling sludge to disposal facility:
| By Applicant | By Others (complete below)

| NAME | | E-MAIL ADDRESS | |
|---|---|---|---|
| Terry Reeves | | wastewater@waynesvillemo.org | |
| ADDRESS | CITY | STATE | ZIP CODE |
| 601 Historic Rt 66 West | Waynesville | Mo. | 65583 |
| CONTACT PERSON | TELEPHONE WITH AREA CODE | PERMIT NO. | |
| Terry Reeves | (573) 774-2552 | MO- 0094161 | |

**9.8** Sludge use or disposal facility:
☐ By Applicant ☐ By Others (Please complete below)

| NAME | | E-MAIL ADDRESS | |
|---|---|---|---|
| Jim Laughlin | | | |
| ADDRESS | CITY | STATE | ZIP CODE |
| 510 Hospital Rd. | Waynesville | Mo. | 65583 |
| CONTACT PERSON | TELEPHONE WITH AREA CODE | PERMIT NO. | |
| Dave Laughlin | 1(573) 528-8924 | MO- 0094161 | |

**9.9** Does the sludge or biosolids disposal comply with Federal Sludge Regulation 40 CFR 503?
☒ Yes ☐ No (Please explain)

Land Applying meets Reg. 40 CFR 503

**END OF PART A**

| FACILITY NAME | PERMIT NO. | OUTFALL NO. |
|---|---|---|
| Waynesville WWTF | MO- 0094161 | 1 |

**PART B – ADDITIONAL APPLICATION INFORMATION**

**10. COLLECTION SYSTEM**

**10.1** Length of sanitary sewer collection system in miles
40

**10.2** Does significant infiltration occur in the collection system? ☒ Yes ☐ No
If yes, briefly explain any steps underway or planned to minimize inflow and infiltration:
City is currently completing Phase I of a bypass elimination plan created by a certified engineer. The city plans to continue with the elimination plan. The city is also encouraging the PCSD #1 to continue their I/I elimination plan as a portion of their system flows directly to the WWTF.

**11. BYPASSING**

Does any bypassing occur anywhere in the collection system or at the treatment facility? Yes ☒ No ☐
If yes, explain: SSO occurs in some manholes within the collection system. The city continues to work on the bypass elimination plan in order to eliminate these occurences.

**12. OPERATION AND MAINTENANCE PERFORMED BY CONTRACTOR(S)**

Are any operational or maintenance aspects (related to wastewater treatment and effluent quality) of the treatment works the responsibility of the contractor?
Yes ☐ No ☒
If Yes, list the name, address, telephone number and status of each contractor and describe the contractor's responsibilities. (Attach additional pages if necessary.)

| NAME | |
|---|---|
| MAILING ADDRESS | |
| TELEPHONE NUMBER WITH AREA CODE | EMAIL ADDRESS |
| RESPONSIBILITIES OF CONTRACTOR | |

**13. SCHEDULED IMPROVEMENTS AND SCHEDULES OF IMPLEMENTATION**

Provide information about any uncompleted implementation schedule or uncompleted plans for improvements that will affect the wastewater treatment, effluent quality, or design capacity of the treatment works. If the treatment works has several different implementation schedules or is planning several improvements, submit separate responses for each.

No scheduled improvements are currently expected for the WWTF. The city recently completed a plant upgrade to produce higher quality effluent.

| FACILITY NAME | PERMIT NO. | OUTFALL NO. |
|---|---|---|
| Waynesville WWTF | MO- 0094161 | 1 |

**PART B – ADDITIONAL APPLICATION INFORMATION**

**14. EFFLUENT TESTING DATA**

Applicants must provide effluent testing data for the following parameters. Provide the indicated effluent data **for each outfall through which effluent is discharged**. Do not include information of combined sewer overflows in this section. All information reported must be based on data collected through analysis conducted using 40 CFR Part 136 methods. In addition, this data must comply with QA/QC requirements of 40 CFR Part 136 and other appropriate QA/QC requirements for standard methods for analytes not addressed by 40 CFR Part 136. At a minimum, effluent testing data must be based on at least **three samples** and must be no more than four and one-half years apart.

Outfall Number

| PARAMETER | MAXIMUM DAILY VALUE | | AVERAGE DAILY VALUE | | |
|---|---|---|---|---|---|
| | Value | Units | Value | Units | Number of Samples |
| pH (Minimum) | 7.0 | S.U. | 7.34 | S.U. | 248 |
| pH (Maximum) | 7.75 | S.U. | 7.67 | S.U. | 248 |
| Flow Rate | 1.96 | MGD | .67 | MGD | 365 |

*For pH report a minimum and a maximum daily value

| POLLUTANT | | MAXIMUM DAILY DISCHARGE | | AVERAGE DAILY DISCHARGE | | | ANALYTICAL METHOD | ML/MDL |
|---|---|---|---|---|---|---|---|---|
| | | Conc. | Units | Conc. | Units | Number of Samples | | |
| Conventional and Nonconventional Compounds | | | | | | | | |
| BIOCHEMICAL OXYGEN DEMAND (Report One) | $BOD_5$ | 8.97 | mg/L | 3.12 | mg/L | 53 | SM 5210B 20th ED 1997 | |
| | $CBOD_5$ | | mg/L | | mg/L | | | |
| E. COLI | | 51.4 | #/100 mL | 18.11 | #/100 mL | 53 | SM 9221F 20th ED 1994 | |
| TOTAL SUSPENDED SOLIDS (TSS) | | 12.25 | mg/L | 4.71 | mg/L | 53 | SM 2540 B 20th ED 1997 | |
| AMMONIA (as N) | | .24 | mg/L | .049 | mg/L | 53 | SM 4500-$NH_3$ B-1997 | |
| CHLORINE* (TOTAL RESIDUAL, TRC) | | | mg/L | | mg/L | | | |
| DISSOLVED OXYGEN | | 8.3 | mg/L | 6.45 | mg/L | 248 | YSI Model 57 DO Meter Calib. Winkler Method | |
| OIL and GREASE | | 9.8 | mg/L | 6.49 | mg/L | 12 | SM 5520 B 20th ED 1997 | |
| OTHER | | | mg/L | | mg/L | | | |

*Report only if facility chlorinates

**END OF PART B**

| FACILITY NAME WAYNESVILLE WASTEWATER TREATMENT FACILITY | PERMIT NO. MO- 0094161 | OUTFALL NO. 1 |
|---|---|---|

**PART C – CERTIFICATION**

**15. CERTIFICATION**

All applicants must complete the Certification Section. This certification must be signed by an officer of the company or city official. All applicants must complete all applicable sections as explained in the Application Overview. By signing this certification statement, applicants confirm that they have reviewed the entire form and have completed all sections that apply to the facility for which this application is submitted.

**ALL APPLICANTS MUST COMPLETE THE FOLLOWING CERTIFICATION.**

I certify under penalty of law that this document and all attachments were prepared under my direction or supervision in accordance with a system designed to assure that qualified personnel properly gather and evaluate the information submitted. Based on my inquiry of the person or persons who manage the system or those persons directly responsible for gathering the information, the information is, to the best of my knowledge and belief, true, accurate and complete. I am aware that there are significant penalties for submitting false information, including the possibility of fine and imprisonment for knowing violations.

| PRINTED NAME | OFFICIAL TITLE (MUST BE AN OFFICER OF THE COMPANY OR CITY OFFICIAL) |
|---|---|
| Terry Reeves | PLANT OPERATOR MO CLASS B - 8945 |

SIGNATURE
Terry Reeves

TELEPHONE NUMBER WITH AREA CODE
573-774-2552

DATE SIGNED
5-27-2015

Upon request of the permitting authority, you must submit any other information necessary to assess wastewater treatment practices at the treatment works or identify appropriate permitting requirements.

Send Completed Form to:

Department of Natural Resources
Water Protection Program
ATTN: NPDES Permits and Engineering Section
P.O. Box 176
Jefferson City, MO 65102

**END OF PART C**
**REFER TO THE APPLICATION OVERVIEW TO DETERMINE WHICH PARTS OF FORM B2 YOU MUST COMPLETE.**

Do not complete the remainder of this application, unless at least one of the following statements applies to your facility:

1. Your facility design flow is equal to or greater than 1,000,000 gallons per day.
2. Your facility is a pretreatment treatment works.
3. Your facility is a combined sewer system.

Submittal of an incomplete application may result in the application being returned. Permit fees for returned applications shall be forfeited. Permit fees for applications being processed by the department that are withdrawn by the applicant shall be forfeited.

To whom it may concern:

Recently we've been working on renewing our permit. Unaware about the Expanded Effluent Testing. We've contacted the Permit Writer and he recommended us to go ahead and get the Expanded Effluent Testing done. We are in the process of waiting on our results. We will send the results as soon as we receive them. Now that we're aware of this test we shouldn't have this problem in the future. If you have any questions or recommendations please call 1(573) 774-2552.

Terry Reeves

Terry Reeves

| MAKE ADDITIONAL COPIES OF THIS FORM FOR EACH OUTFALL | | |
|---|---|---|
| FACILITY NAME | PERMIT NO. MO- | OUTFALL NO. |

**PART D – EXPANDED EFFLUENT TESTING DATA**

**16. EXPANDED EFFLUENT TESTING DATA**

Refer to the APPLICATION OVERVIEW to determine whether Part D applies to the treatment works.

If the treatment works has a design flow greater than or equal to 1 million gallons per day or it has (or is required to have) a pretreatment program, or is otherwise required by the permitting authority to provide the data, then provide effluent testing data for the following pollutants. Provide the indicated effluent testing information **for each outfall through which effluent is discharged.** Do not include information of combined sewer overflows in this section. All information reported must be based on data collected through analysis conducted using 40 CFR Part 136 methods. The facility shall use sufficiently sensitive analytical methods for detecting, identifying, and measuring the concentrations of pollutants. In addition, this data must comply with QA/QC requirements of 40 CFR Part 136 and other appropriate QA/QC requirements for standard methods for analytes not addressed by 40 CFR Part 136. Indicate in the blank rows provided below any data you may have on pollutants not specifically listed in this form. At a minimum, effluent testing data must be based on at least **three pollutant scans** and must be no more than four and one-half years apart.

Outfall Number (Complete Once for Each Outfall Discharging Effluent to Waters of the State.)

| POLLUTANT | MAXIMUM DAILY DISCHARGE | | | | AVERAGE DAILY DISCHARGE | | | | | ANALYTICAL METHOD | ML/MDL |
|---|---|---|---|---|---|---|---|---|---|---|---|
| | Conc. | Units | Mass | Units | Conc. | Units | Mass | Units | No. of Samples | | |
| **METALS (TOTAL RECOVERABLE), CYANIDE, PHENOLS AND HARDNESS** | | | | | | | | | | | |
| ANTIMONY | | | | | | | | | | | |
| ARSENIC | | | | | | | | | | | |
| BERYLLIUM | | | | | | | | | | | |
| CADMIUM | | | | | | | | | | | |
| CHROMIUM III | | | | | | | | | | | |
| CHROMIUM VI | | | | | | | | | | | |
| COPPER | | | | | | | | | | | |
| LEAD | | | | | | | | | | | |
| MERCURY | | | | | | | | | | | |
| NICKEL | | | | | | | | | | | |
| SELENIUM | | | | | | | | | | | |
| SILVER | | | | | | | | | | | |
| THALLIUM | | | | | | | | | | | |
| ZINC | | | | | | | | | | | |
| CYANIDE | | | | | | | | | | | |
| TOTAL PHENOLIC COMPOUNDS | | | | | | | | | | | |
| HARDNESS (as $CaCO_3$) | | | | | | | | | | | |
| **VOLATILE ORGANIC COMPOUNDS** | | | | | | | | | | | |
| ACROLEIN | | | | | | | | | | | |
| ACRYLONITRILE | | | | | | | | | | | |
| BENZENE | | | | | | | | | | | |
| BROMOFORM | | | | | | | | | | | |
| CARBON TETRACHLORIDE | | | | | | | | | | | |
| CHLOROBENZENE | | | | | | | | | | | |

| FACILITY NAME | PERMIT NO. MO- | OUTFALL NO. |
|---|---|---|

## PART D – EXPANDED EFFLUENT TESTING DATA

### 16. EXPANDED EFFLUENT TESTING DATA

Complete Once for Each Outfall Discharging Effluent to Waters of the State

| POLLUTANT | MAXIMUM DAILY DISCHARGE | | | | AVERAGE DAILY DISCHARGE | | | | | ANALYTICAL METHOD | ML/MDL |
|---|---|---|---|---|---|---|---|---|---|---|---|
| | Conc. | Units | Mass | Units | Conc. | Units | Mass | Units | No. of Samples | | |
| CHLORODIBROMO-METHANE | | | | | | | | | | | |
| CHLOROETHANE | | | | | | | | | | | |
| 2-CHLORO-ETHYLVINYL ETHER | | | | | | | | | | | |
| CHLOROFORM | | | | | | | | | | | |
| DICHLOROBROMO-METHANE | | | | | | | | | | | |
| 1,1-DICHLORO-ETHANE | | | | | | | | | | | |
| 1,2-DICHLORO-ETHANE | | | | | | | | | | | |
| TRANS-1,2-DICHLOROETHYLENE | | | | | | | | | | | |
| 1,1-DICHLORO-ETHYLENE | | | | | | | | | | | |
| 1,2-DICHLORO-PROPANE | | | | | | | | | | | |
| 1,3-DICHLORO-PROPYLENE | | | | | | | | | | | |
| ETHYLBENZENE | | | | | | | | | | | |
| METHYL BROMIDE | | | | | | | | | | | |
| METHYL CHLORIDE | | | | | | | | | | | |
| METHYLENE CHLORIDE | | | | | | | | | | | |
| 1,1,2,2-TETRA-CHLOROETHANE | | | | | | | | | | | |
| TETRACHLORO-ETHANE | | | | | | | | | | | |
| TOLUENE | | | | | | | | | | | |
| 1,1,1-TRICHLORO-ETHANE | | | | | | | | | | | |
| 1,1,2-TRICHLORO-ETHANE | | | | | | | | | | | |
| TRICHLORETHYLENE | | | | | | | | | | | |
| VINYL CHLORIDE | | | | | | | | | | | |
| **ACID-EXTRACTABLE COMPOUNDS** | | | | | | | | | | | |
| P-CHLORO-M-CRESOL | | | | | | | | | | | |
| 2-CHLOROPHENOL | | | | | | | | | | | |
| 2,4-DICHLOROPHENOL | | | | | | | | | | | |
| 2,4-DIMETHYLPHENOL | | | | | | | | | | | |
| 4,6-DINITRO-O-CRESOL | | | | | | | | | | | |
| 2,4-DINITROPHENOL | | | | | | | | | | | |
| 2-NITROPHENOL | | | | | | | | | | | |
| 4-NITROPHENOL | | | | | | | | | | | |

| FACILITY NAME | PERMIT NO. MO- | OUTFALL NO. |
|---|---|---|

## PART D – EXPANDED EFFLUENT TESTING DATA

### 16. EXPANDED EFFLUENT TESTING DATA

Complete Once for Each Outfall Discharging Effluent to Waters of the State.

| POLLUTANT | MAXIMUM DAILY DISCHARGE | | | | AVERAGE DAILY DISCHARGE | | | | | ANALYTICAL METHOD | ML/MDL |
|---|---|---|---|---|---|---|---|---|---|---|---|
| | Conc. | Units | Mass | Units | Conc. | Units | Mass | Units | No. of Samples | | |
| PENTACHLOROPHENOL | | | | | | | | | | | |
| PHENOL | | | | | | | | | | | |
| 2,4,6-TRICHLOROPHENOL | | | | | | | | | | | |
| **BASE-NEUTRAL COMPOUNDS** | | | | | | | | | | | |
| ACENAPHTHENE | | | | | | | | | | | |
| ACENAPHTHYLENE | | | | | | | | | | | |
| ANTHRACENE | | | | | | | | | | | |
| BENZIDINE | | | | | | | | | | | |
| BENZO(A)ANTHRACENE | | | | | | | | | | | |
| BENZO(A)PYRENE | | | | | | | | | | | |
| 3,4-BENZO-FLUORANTHENE | | | | | | | | | | | |
| BENZO(GH) PHERYLENE | | | | | | | | | | | |
| BENZO(K) FLUORANTHENE | | | | | | | | | | | |
| BIS (2-CHLOROTHOXY) METHANE | | | | | | | | | | | |
| BIS (2-CHLOROETHYL) – ETHER | | | | | | | | | | | |
| BIS (2-CHLOROISO-PROPYL) ETHER | | | | | | | | | | | |
| BIS (2-ETHYLHEXYL) PHTHALATE | | | | | | | | | | | |
| 4-BROMOPHENYL PHENYL ETHER | | | | | | | | | | | |
| BUTYL BENZYL PHTHALATE | | | | | | | | | | | |
| 2-CHLORONAPH-THALENE | | | | | | | | | | | |
| 4-CHLORPHENYL PHENYL ETHER | | | | | | | | | | | |
| CHRYSENE | | | | | | | | | | | |
| DI-N-BUTYL PHTHALATE | | | | | | | | | | | |
| DI-N-OCTYL PHTHALATE | | | | | | | | | | | |
| DIBENZO (A,H) ANTHRACENE | | | | | | | | | | | |
| 1,2-DICHLORO-BENZENE | | | | | | | | | | | |
| 1,3-DICHLORO-BENZENE | | | | | | | | | | | |
| 1,4-DICHLORO-BENZENE | | | | | | | | | | | |
| 3,3-DICHLORO-BENZIDINE | | | | | | | | | | | |
| DIETHYL PHTHALATE | | | | | | | | | | | |
| DIMETHYL PHTHALATE | | | | | | | | | | | |

| FACILITY NAME | PERMIT NO. MO- | OUTFALL NO. |
|---|---|---|

**PART D – EXPANDED EFFLUENT TESTING DATA**

**16. EXPANDED EFFLUENT TESTING DATA**

Complete Once for Each Outfall Discharging Effluent to Waters of the State.

| POLLUTANT | MAXIMUM DAILY DISCHARGE | | | | AVERAGE DAILY DISCHARGE | | | | | ANALYTICAL METHOD | ML/MDL |
|---|---|---|---|---|---|---|---|---|---|---|---|
| | Conc. | Units | Mass | Units | Conc. | Units | Mass | Units | No. of Samples | | |
| 2,4-DINITRO-TOLUENE | | | | | | | | | | | |
| 2,6-DINITRO-TOLUENE | | | | | | | | | | | |
| 1,2-DIPHENYL-HYDRAZINE | | | | | | | | | | | |
| FLUORANTHENE | | | | | | | | | | | |
| FLUORENE | | | | | | | | | | | |
| HEXACHLOROBENZENE | | | | | | | | | | | |
| HEXACHLOROBUTADIENE | | | | | | | | | | | |
| HEXACHLOROCYCLO-PENTADIENE | | | | | | | | | | | |
| HEXACHLOROETHANE | | | | | | | | | | | |
| INDENO (1,2,3-CD) PYRENE | | | | | | | | | | | |
| ISOPHORONE | | | | | | | | | | | |
| NAPHTHALENE | | | | | | | | | | | |
| NITROBENZENE | | | | | | | | | | | |
| N-NITROSODI-PROPYLAMINE | | | | | | | | | | | |
| N-NITROSODI-METHYLAMINE | | | | | | | | | | | |
| N-NITROSODI-PHENYLAMINE | | | | | | | | | | | |
| PHENANTHRENE | | | | | | | | | | | |
| PYRENE | | | | | | | | | | | |
| 1,2,4-TRICHLOROBENZENE | | | | | | | | | | | |

Use this space (or a separate sheet) to provide information on other pollutants not specifically listed in this form.

| | | | | | | | | | | | |
|---|---|---|---|---|---|---|---|---|---|---|---|
| | | | | | | | | | | | |
| | | | | | | | | | | | |
| | | | | | | | | | | | |
| | | | | | | | | | | | |
| | | | | | | | | | | | |
| | | | | | | | | | | | |
| | | | | | | | | | | | |
| | | | | | | | | | | | |
| | | | | | | | | | | | |
| | | | | | | | | | | | |
| | | | | | | | | | | | |

**END OF PART D**

**REFER TO THE APPLICATION OVERVIEW TO DETERMINE WHICH OTHER PARTS OF FORM B2 YOU MUST COMPLETE.**

**MAKE ADDITIONAL COPIES OF THIS FORM FOR EACH OUTFALL**

| FACILITY NAME | PERMIT NO. | OUTFALL NO. |
|---|---|---|
| WAYNESVILLE WASTEWATER TREATMENT FACILITY | MO- 0094161 | 1 |

## PART E – TOXICITY TESTING DATA

### 17. TOXICITY TESTING DATA

Refer to the APPLICATION OVERVIEW to determine whether Part E applies to the treatment works.

Publicly owned treatment works, or POTWs, meeting one or more of the following criteria must provide the results of whole effluent toxicity tests for acute or chronic toxicity for each of the facility's discharge points.

A. POTWs with a design flow rate greater than or equal to 1 million gallons per day

B. POTWs with a pretreatment program (or those that are required to have one under 40 CFR Part 403)

C. POTWs required by the permitting authority to submit data for these parameters

- At a minimum, these results must include quarterly testing for a 12-month period within the past one year using multiple species (minimum of two species), or the results from four tests performed at least annually in the four and one-half years prior to the application, provided the results show no appreciable toxicity, and testing for acute or chronic toxicity, depending on the range of receiving water dilution. Do not include information about combined sewer overflows in this section. All information reported must be based on data collected through analysis conducted using 40 CFR Part 136 methods. In addition, this data must comply with QA/QC requirements of 40 CFR Part 136 and other appropriate QA/QC requirements for standard methods for analytes not addressed by 40 CFR Part 136.
- If EPA methods were not used, report the reason for using alternative methods. If test summaries are available that contain all of the information requested below, they may be submitted in place of Part E. If no biomonitoring data is required, do not complete Part E. Refer to the application overview for directions on which other sections of the form to complete.

Indicate the number of whole effluent toxicity tests conducted in the past four and one-half years: ____ chronic 4 acute

Complete the following chart **for the last three whole effluent toxicity tests.** Allow one column per test. Copy this page if more than three tests are being reported.

| | Most Recent | 2ND Most Recent | 3RD Most Recent |
|---|---|---|---|
| A. Test Information | CERIODAPHNIA DUBIA 24 HR STO METH 8712 \| PIMEPHALES PROMELAS STO METH 8921 | | |
| Test Method Number | EPA METH 2000 - 2002 → | → | |
| Final Report Number | 208-2014 STO METH 8921 | 8921 → | → |
| Outfall Number | 1 | 1 | 1 |
| Dates Sample Collected | 6-24-14 - 6-25-14 | 5-28-13 5-29-13 | 7-10-12 7-11-12 |
| Date Test Started | 6-24-16 | | |
| Duration | 48 HRS | 48 HRS | 48 HR |
| B. Toxicity Test Methods Followed | | | |
| Manual Title | STANDARD METHODS → | | |
| Edition Number and Year of Publication | 20TH 1998 → | | |
| Page Number(s) | 8-87 8-89 8-132 8-134 → | | |
| C. Sample collection method(s) used. For multiple grab samples, indicate the number of grab samples used | | | |
| 24-Hour Composite | ✓ | ✓ | ✓ |
| Grab | | | |
| D. Indicate where the sample was taken in relation to disinfection (Check all that apply for each) | | | |
| Before Disinfection | | | |
| After Disinfection | AFTER UV DISINFECTION | AFTER UV DISINFECTION | — |
| After Dechlorination | | | EFF AFTER DE CL/2 |
| E. Describe the point in the treatment process at which the sample was collected | | | |
| Sample Was Collected: | PAST UV DISINFECTION | PAST UV DISINFECTION | PAST DE CL/2 |
| F. Indicate whether the test was intended to assess chronic toxicity, acute toxicity, or both | | | |
| Chronic Toxicity | | | |
| Acute Toxicity | ✓ | ✓ | ✓ |
| G. Provide the type of test performed | | | |
| Static | ✓ | ✓ | ✓ |
| Static-renewal | — | | |
| Flow-through | — | | — |
| H. Source of dilution water. If laboratory water, specify type; if receiving water, specify source | | | |
| Laboratory Water | | — | — |
| Receiving Water | ROUBIDOUX | ROUBIDOUX CREEK | ROUBIDOUX CREEK |

| FACILITY NAME WAYNESVILLE WASTEWATER TREATMENT FACILITY | PERMIT NO. MO- 0094161 | OUTFALL NO. 1 |
|---|---|---|

**PART E – TOXICITY TESTING DATA**

**17. TOXICITY TESTING DATA (continued)**

| | Most Recent | 2ND Most Recent | 3RD Most Recent |
|---|---|---|---|
| I. Type of dilution water. If salt water, specify "natural" or type of artificial sea salts or brine used. | | | |
| Fresh Water | | | |
| Salt Water | | | |
| J. Percentage of effluent used for all concentrations in the test series | | | |
| | 100 % | 100 % | 100 % |
| | | | |
| | | | |
| K. Parameters measured during the test (State whether parameter meets test method specifications) | | | |
| pH | 7.21 | 7.44 | 6.40 |
| Salinity | | | |
| Temperature | 16.7 | 5.7 | 20.1 |
| Ammonia | <0.09 | <0.06 | 0.07 |
| Dissolved Oxygen | 8.15 | 8.40 | 8.45 |
| L. Test Results | | | |
| Acute: | | | |
| Percent Survival in 100% Effluent | 100 % | 100 % | 100 % |
| $LC_{50}$ | | | |
| 95% C.I. | | | |
| Control Percent Survival | | | |
| Other (Describe) | | | |
| Chronic: | | | |
| NOEC | | | |
| $IC_{25}$ | | | |
| Control Percent Survival | 100 % | 100 % | 100 % |
| Other (Describe) | | | |
| M. Quality Control/ Quality Assurance | | | |
| Is reference toxicant data available? | | | |
| Was reference toxicant test within acceptable bounds? | | | |
| What date was reference toxicant test run (MM/DD/YYYY)? | | | |
| Other (Describe) | | | |

Is the treatment works involved in a toxicity reduction evaluation? ☐ Yes ☒ No

If yes, describe:

If you have submitted biomonitoring test information, or information regarding the cause of toxicity, within the past four and one-half years, provide the dates the information was submitted to the permitting authority and a summary of the results.

Date Submitted (MM/DD/YYYY)

Summary of Results (See Instructions)

**END OF PART E**

**REFER TO THE APPLICATION OVERVIEW TO DETERMINE WHICH OTHER PARTS OF FORM B2 YOU MUST COMPLETE.**

**MAKE ADDITIONAL COPIES OF THIS FORM FOR EACH OUTFALL**

| FACILITY NAME | PERMIT NO. | OUTFALL NO. |
|---|---|---|
| | MO- | |

## PART F – INDUSTRIAL USER DISCHARGES AND RCRA/CERCLA WASTES

Refer to the APPLICATION OVERVIEW to determine whether Part F applies to the treatment works.

### 18. GENERAL INFORMATION

**18.1** Does the treatment works have, or is it subject to, an approved pretreatment program?

☐ Yes ☐ No

**18.2** Number of Significant Industrial Users (SIUs) and Categorical Industrial Users (CIUs). Provide the number of each of the following types of industrial users that discharge to the treatment works:

Number of non-categorical SIUs ____

Number of CIUs ____

### 19. INDUSTRIES CONTRIBUTING MORE THAN 5 PERCENT OF THE ACTUAL FLOW TO THE FACILITY OR OTHER SIGNIFICANT INDUSTRIAL USERS INFORMATION

Supply the following information for each SIU. If more than one SIU discharges to the treatment works, provide the information requested for each. Submit additional pages as necessary.

| NAME | | | |
|---|---|---|---|
| MAILING ADDRESS | CITY | STATE | ZIP |

**19.1** Describe all of the industrial processes that affect or contribute to the SIU's discharge

**19.2** Describe all of the principle processes and raw materials that affect or contribute to the SIU's discharge.

Principal Product(s):

Raw Material(s):

**19.3** Flow Rate

a. PROCESS WASTEWATER FLOW RATE. Indicate the average daily volume of process wastewater discharged into the collection system in gallons per day, or gpd, and whether the discharge is continuous or intermittent.

gpd ☐ Continuous ☐ Intermittent

b. NON-PROCESS WASTEWATER FLOW RATE. Indicate the average daily volume of non-process wastewater discharged into the collection system in gallons per day, or gpd, and whether the discharge is continuous or intermittent.

gpd ☐ Continuous ☐ Intermittent

**19.4** Pretreatment Standards. Indicate whether the SIU is subject to the following:

a. Local Limits ☐ Yes ☐ No

b. Categorical Pretreatment Standards ☐ Yes ☐ No

If subject to categorical pretreatment standards, which category and subcategory?

**19.5** Problems at the Treatment Works attributed to waste discharged by the SIU. Has the SIU caused or contributed to any problems (e.g., upsets, interference) at the treatment works in the past three years?

☐ Yes ☐ No

If Yes, describe each episode

| MAKE ADDITIONAL COPIES OF THIS FORM FOR EACH OUTFALL | | |
|---|---|---|
| FACILITY NAME | PERMIT NO.<br>MO- | OUTFALL NO. |

**PART F – INDUSTRIAL USER DISCHARGES AND RCRA/CERCLA WASTES**

**20. RCRA HAZARDOUS WASTE RECEIVED BY TRUCK, RAIL, OR DEDICATED PIPELINE**

**20.1** Does the treatment works receive or has it in the past three years received RCRA hazardous waste by truck, rail or dedicated pipe? ☐ Yes ☐ No

**20.2** Method by which RCRA waste is received. (Check all that apply)
☐ Truck ☐ Rail ☐ Dedicated Pipe

**20.3** Waste Description

| EPA Hazardous Waste Number | Amount (volume or mass) | Units |
|---|---|---|
| | | |
| | | |
| | | |

**21. CERCLA (SUPERFUND) WASTEWATER, RCRA REMEDIATION/CORRECTIVE ACTION WASTEWATER, AND OTHER REMEDIAL ACTIVITY WASTEWATER**

**21.1** Does the treatment works currently (or has it been notified that it will) receive waste from remedial activities?
☐ Yes ☐ No
Provide a list of sites and the requested information for each current and future site.

**21.2** Waste Origin. Describe the site and type of facility at which the CERCLA/RCRA/or other remedial waste originates (or is expected to originate in the next five years).

**21.3** List the hazardous constituents that are received (or are expected to be received). Included data on volume and concentration, if known. (Attach additional sheets if necessary)

**21.4** Waste Treatment

a. Is this waste treated (or will it be treated) prior to entering the treatment works?
☐ Yes ☐ No

If Yes, describe the treatment (provide information about the removal efficiency):

b. Is the discharge (or will the discharge be) continuous or intermittent?
☐ Continuous ☐ Intermittent

If intermittent, describe the discharge schedule:

**END OF PART F**

**REFER TO THE APPLICATION OVERVIEW TO DETERMINE WHICH OTHER PARTS OF FORM B2 YOU MUST COMPLETE.**

| MAKE ADDITIONAL COPIES OF THIS FORM FOR EACH OUTFALL | | |
|---|---|---|
| FACILITY NAME | PERMIT NO. MO- | OUTFALL NO. |

**PART G – COMBINED SEWER SYSTEMS**

Refer to the APPLICATION OVERVIEW to determine whether Part G applies to the treatment works.

**22. GENERAL INFORMATION**

**22.1 System Map.** Provide a map indicating the following: (May be included with basic application information.)

A. All CSO Discharges.
B. Sensitive Use Areas Potentially Affected by CSOs. (e.g., beaches, drinking water supplies, shellfish beds, sensitive aquatic ecosystems and Outstanding Natural Resource Waters.)
C. Waters that Support Threatened and Endangered Species Potentially Affected by CSOs.

**22.2 System Diagram.** Provide a diagram, either in the map provided above or on a separate drawing, of the Combined Sewer Collection System that includes the following information:

A. Locations of Major Sewer Trunk Lines, Both Combined and Separate Sanitary.
B. Locations of Points where Separate Sanitary Sewers Feed into the Combined Sewer System.
C. Locations of In-Line or Off-Line Storage Structures.
D. Locations of Flow-Regulating Devices.
E. Locations of Pump Stations.

**22.3** Percent of collection system that is combined sewer

**22.4** Population served by combined sewer collection system

**22.5** Name of any satellite community with combined sewer collection system

**23. CSO OUTFALLS. COMPLETE THE FOLLOWING ONCE FOR EACH CSO DISCHARGE POINT**

**23.1** Description of Outfall

a. Outfall Number
b. Location

c. Distance from Shore (if applicable) _____ ft
d. Depth Below Surface (if applicable) _____ ft
e. Which of the following were monitored during the last year for this CSO?

☐ Rainfall ☐ CSO Pollutant Concentrations ☐ CSO
☐ CSO Flow Volume ☐ Receiving Water Quality

f. How many storm events were monitored last year?

**23.2** CSO Events

a. Give the Number of CSO Events in the Last Year Events ☐ Actual ☐ Approximate
b. Give the Average Duration Per CSO Event
Hours ☐ Actual ☐ Approximate
c. Give the Average Volume Per CSO Event
Million Gallons ☐Actual ☐ Approximate
d. Give the minimum rainfall that caused a CSO event in the last year _____ inches of rainfall

**23.3** Description of Receiving Waters

a. Name of Receiving Water
b. Name of Watershed/River/Stream System
c. U.S. Soil Conservation Service 14-Digit Watershed Code (If Known)
d. Name of State Management/River Basin
e. U.S. Geological Survey 8- Digit Hydrologic Cataloging Unit Code (If Known)

**23.4** CSO Operations

Describe any known water quality impacts on the receiving water caused by this CSO (e.g., permanent or intermittent beach closings, permanent or intermittent shellfish bed closings, fish kills, fish advisories, other recreational loss, or violation of any applicable state water quality standard.)

**END OF PART G**

**REFER TO THE APPLICATION OVERVIEW TO DETERMINE WHICH OTHER PARTS OF FORM B2 YOU MUST COMPLETE.**

**INSTRUCTIONS FOR COMPLETING FORM B2**
**APPLICATION FOR OPERATING PERMIT FOR FACILITIES THAT RECEIVE PRIMARILY DOMESTIC WASTE AND HAVE A DESIGN FLOW MORE THAN 100,000 GALLONS PER DAY. Form 780-1805**
(Facilities less than or equal to 100,000 gallons per day of domestic waste must use Form B - 780-1512.)

PART A – BASIC APPLICATION INFORMATION

1. Check the appropriate box. **Do not check more than one item.** Operating permits refer to permits issued by the Department of Natural Resources, Water Protection Program. If an Antidegradation Review has not been conducted, please submit the application located at the following link to the Missouri Department of Natural Resources, Water Protection Program, P.O. Box 176, Jefferson City, MO 65102: dnr.mo.gov/forms/780-1893-f.pdf.

1.1 **Fees Information:**

**DOMESTIC OPERATING PERMIT FEES – PRIVATE**

Annual operating permit fees are based on flow.

| Annual fee/Design flow | Annual fee/Design flow | Annual fee/Design flow |
|---|---|---|
| $100.....<5,000 gpd | $375.....10,000-10,999 gpd | $650.....16,000-16,999 gpd |
| $150.....5,000-5,999 gpd | $400.....11,000-11,999 gpd | $800.....17,000-19,999 gpd |
| $175.....6,000-6,999 gpd | $450.....12,000-12,999 gpd | $1,000.....20,000-22,999 gpd |
| $200.....7,000-7,999 gpd | $500.....13,000-13,999 gpd | $2,000.....23,000-24,999 gpd |
| $225.....8,000-8,999 gpd | $550.....14,000-14,999 gpd | $2,500.....25,000-29,999 gpd |
| $250.....9,000-9,999 gpd | $600.....15,000-15,999 gpd | $3,000.....30,000 gpd -1 mgd |

New domestic wastewater treatment facilities must submit the annual fee with the original application.

**If the application is for a site-specific permit re-issuance, send no fees.** You will be invoiced separately by the department on the anniversary date of the original permit. Permit fees must be current for the department to reissue the operating permit. Late fees of two percent per month are charged and added to outstanding annual fees.

**PUBLIC SEWER SYSTEM OPERATING PERMIT FEES** (City, Public Sewer District, Public Water District, or other publicly owned treatment works). Annual fee is based on number of service connections. The table of fees is in 10 CSR 20-6.011 and is available at www.sos.mo.gov/adrules/csr/current/10csr/10c20-6a.pdf. New Public Sewer System facilities should not submit any fee as the department will invoice the permittee.

**OPERATING PERMIT MODIFICATIONS**, including transfers, are subject to the following fees:

a. Municipals - $200 each.
b. All others – $100 each.

Note: Facility name or address changes where owner, operator and continuing authority remain the same are not considered transfers.

2. Name of Facility – Include the name by which this facility is locally known. Example: Southwest Sewage Treatment Plant, Country Club Mobile Home Park, etc. Provide the street address or location of the facility. If the facility lacks a street name or route number, provide the names of the closest intersection, highway, country road, etc.

2.1 Self-explanatory.

2.2 Global Positioning System, or GPS, is a satellite-based navigation system. The department prefers that a GPS receiver is used and the displayed coordinates submitted. If access to a GPS receiver is not available, use a mapping system to approximate the coordinates; the department's mapping system is available at www.dnr.mo.gov/internetmapviewer/.

2.3-2.4 Self-explanatory.

3. Owner – Provide the legal name, mailing address, phone number, and e-mail address of the owner.

3.1 Prior to submitting a permit to public notice, the Department of Natural Resources shall provide the permit applicant 15 days to review the draft permit for nonsubstantive drafting errors. In the interest of expediting permit issuance, permit applicants may waive the opportunity to review draft permits prior to public notice.

3.2-3.4 Self-explanatory.

4. Continuing Authority – Provide information for the permanent organization which will serve as the continuing authority for the operation, maintenance, and modernization of the facility. The regulatory requirement regarding continuing authority is available at www.sos.mo.gov/adrules/csr/current/10csr/10c20-6a.pdf or contact the Department of Natural Resources Water Protection Program (see contact information below).

5. Operator – Provide the name, certificate number, title, mailing address, phone number, and e-mail address of the operator of the facility.

6. Provide the name, title, mailing address, work phone number, and e-mail address of a person who is thoroughly familiar with the operation of the facility and with the facts reported in this application and who can be contacted by the department.

7.1 **Process Flow Diagram Examples**

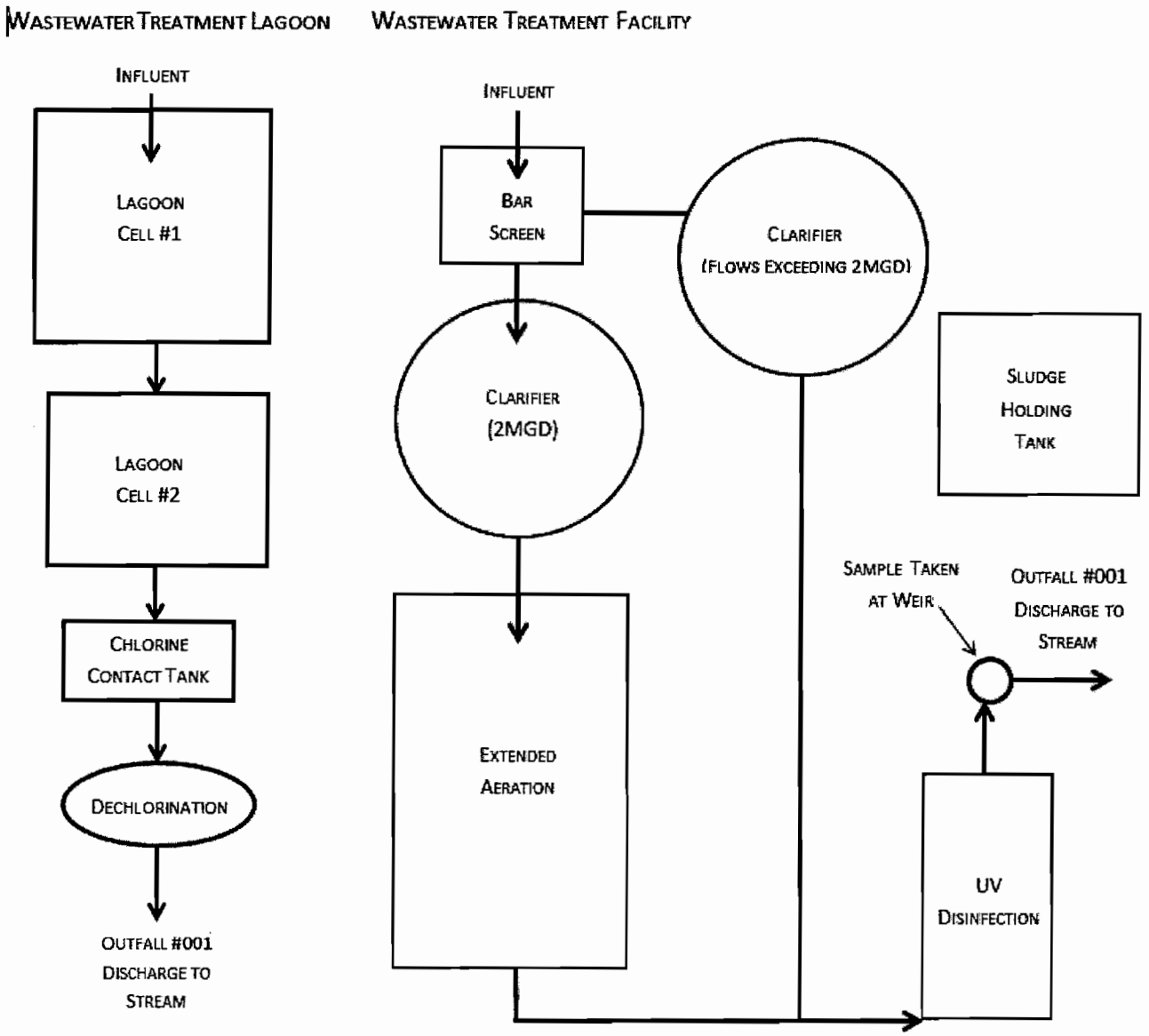


7.2 A topographic map is available on the web at www.dnr.mo.gov/internetmapviewer/ or from the Department of Natural Resources' Geological Survey in Rolla at 573-368-2125.

7.3 For Standard Industrial Codes visit www.osha.gov/pls/imis/sicsearch.html and for the North American Industry Classification System, visit www.census.gov/naics or contact the Department of Natural Resources Water Protection Program.

7.4-7.8 Self – explanatory.

7.9 If wastewater is land applied please submit form I: www.dnr.mo.gov/forms/780-1686-f.pdf.

7.10-8. Self-explanatory

9.1 A copy of 10 CSR 25 is available at www.sos.mo.gov/adrules/csr/current/10csr/10csr.asp#10-25.

9.2-9.9 Self – explanatory.

**INSTRUCTIONS FOR COMPLETING FORM B2**
**APPLICATION FOR OPERATING PERMIT FOR FACILITIES THAT RECEIVE PRIMARILY DOMESTIC WASTE AND HAVE A DESIGN FLOW MORE THAN 100,000 GALLONS PER DAY**
**(continued)**

PART B – ADDITIONAL APPLICATION INFORMATION
10.-14. Self-explanatory

PART C – CERTIFICATION
15. Signature – All applications must be signed as follows and the signatures must be original:
   a. For a corporation, by an officer having responsibility for the overall operation of the regulated facility or activity or for environmental matters.
   b. For a partnership or sole proprietorship, by a general partner or the proprietor.
   c. For a municipal, state, federal or other public facility, by either a principal executive officer or by an individual having overall responsibility for environmental matters at the facility.

PART D – EXPANDED EFFLUENT TESTING DATA
16. Self-explanatory. ML/MDL means minimum limit or minimum detection limit.

PART E – TOXICITY TESTING DATA
17. Self- explanatory.

PART F – INDUSTRIAL USER DISCHARGES AND RCRA/CERCLA WASTES
18. Federal regulations are available through the U.S. Government Printing Office at www.gpoaccess.gov/cfr/index.html.
18.1 Self – explanatory
18.2 A non-categorical significant industrial user is an industrial user that is not a CIU and meets one or more of the following:
   i. Discharges an average of 25,000 gallons per day or more of process wastewater to the treatment works (with certain exclusions).
   ii. Contributes a process waste stream that makes up five percent or more of the average dry weather hydraulic or organic capacity of the treatment plant.
   iii. Is designated as an SIU by the control authority.
19.-21.4 Self-explanatory.

PART G – COMBINED SEWER SYSTEMS
22.-23.4 Self-explanatory.

**Submittal of an incomplete application may result in the application being returned.**

This completed form and any attachments along with the applicable permit fees, should be submitted to:

Department of Natural Resources
Water Protection Program
ATTN: NPDES Permits and Engineering Section
P.O. Box 176
Jefferson City, MO 65102

If there are any questions concerning this form, contact the appropriate Department of Natural Resources regional office or the Water Protection Program at 573-751-6825. A map of the department's regional offices with addresses and phone numbers is available at www.dnr.mo.gov/regions/ro-map.pdf .