BRIDGETON LANDFILL

LANDFILL GAS CORRECTIVE ACTION PLAN UPDATE

Submitted Pursuant to Section 23 of Agreed Order
Case No. 13SL-CC01088, Effective May 13, 2013

Bridgeton Landfill, LLC
13570 St. Charles Rock Rd.
Bridgeton, MO 63044

Technical Contributors:

Civil & Environmental Consultants, Inc.
4848 Park 370, Suite F
Hazelwood, MO 63042

Weaver Boos Consultants
1000 N. College Ave., Suite D
Columbia, MO 65201

July 26, 2013

TABLE OF CONTENTS

1.0 INTRODUCTION 1
2.0 REVIEW OF CURRENT GAS MIGRATION CONTROL STATUS 2
3.0 RECENT GAS MIGRATION CONTROL EFFORTS 5
4.0 PROPOSED AND ONGOING GAS MIGRATION CONTROL EFFORTS 7
5.0 CONTINUED MONITORING AND REPORTING 9

TABLES

Table 1: Compliance Gas Monitoring Probe Data (11/21/12 – 7/5/13)
Table 2: Sentry Gas Monitoring Probe Data (11/21/12 – 7/5/13)
Table 3: Temporary Gas Monitoring Probe Data (11/21/12 – 7/5/13)
Table 4: Public Safety Gas Monitoring Probe Data (11/21/12 – 7/5/13)

APPENDICES

Appendix A – Gas Monitoring Probe Methane Level Graphs
Appendix B – GMP and TMP Boring Logs/Construction Logs
Appendix C – Bridgeton Landfill Infrastructure As-Built Drawing, July 2013

1.0 INTRODUCTION

On May 13, 2013, Bridgeton Landfill entered into an Agreed Order with the State of Missouri which requires actions to address what was called a subsurface smoldering event (SSE). Section 23 of the Agreed Order requires the preparation of an updated "Landfill Gas Corrective Action Plan" (CAP) and requests that the update consider SSE control measures.

Missouri Solid Waste Management Regulations require that subsurface landfill gas be controlled so that it does not exceed 2.5% (which is equal to 50% of the lower explosive limit, or LEL) in the ground at the facility property boundary. If this level is exceeded at the property boundary, the facility must implement enhanced monitoring and corrective measures. Corrective Action Plans are frequently used to present and communicate these measures.

Bridgeton Landfill has been monitoring for gas migration using permanent gas monitoring probes since 1998. Since that time, landfill gas Corrective Action Plans have been implemented, additional monitoring locations have been added, and many control features have been installed. These efforts have been previously documented and are incorporated by reference as background for this current work.

Lateral landfill gas migration is common at unlined municipal solid waste (MSW) landfills, and especially in quarry fill environments. Bridgeton Landfill has some areas where the property line is close to solid waste limits (near the edge of the quarry wall) and monitoring has detected methane near the property line in certain locations. In addition, the SSE that Bridgeton Landfill has been experiencing since 2010, and that intensified in 2012, has further challenged methane control in those areas.

The purpose of this document, as required by the Agreed Order, is to provide an update to the November 27, 2012 CAP that considers the SSE control measures. As such, this document includes monitoring data up to July 2013, reviews the status of gas migration control, presents recent (since the approved November 27, 2012 CAP) efforts to reduce methane migration, and discusses forward-going monitoring and reporting procedures. It is intended that this CAP supplements and/or supersedes the previous CAPs and agreements.

2.0 REVIEW OF CURRENT GAS MIGRATION CONTROL STATUS

The intensification of the SSE has created conditions that have made control of gas migration more challenging, including:

- Increased pressure within the landfill waste with pressure-gradient which forces gas outward;
- Increased liquid generation resulting in steam and saturated gas which effects collection efficiency, and
- Carefully controlled and reduced application of gas extraction well vacuum with efforts to minimize oxygen content in the gas well.

Detailed graphs showing methane concentrations for the past three years are included in Appendix A. Appendix B includes a list of the gas monitoring probes monitored at the Bridgeton Landfill along with the boring logs and/or construction logs for each probe. Please note, the gas monitoring probes has been referenced with different abbreviations and the table in Appendix B is included to provide clarity.

As can be seen on the graphs, there are several compliance point and sentry monitoring probe locations that have been historically elevated (GMP-01, GMP-04, GMP-05 GMP-06 and GMP-07), as well as elevated levels in new gas monitoring probes where monitoring began in October 2012 after the SSE intensified (GMP-5S, GMP-14S, GMP-14D). Temporary monitoring probes installed to determine the rate and extent of the methane migration in the vicinity of impacted probe GMP-01 (TMP-1S, TMP-2S, TMP-2M, TMP-2D, TMP-3S, TMP-3M, and TMP-3D) have also exhibited elevated levels of methane since installation.

Due to the additional gas monitoring probes, which initiated monitoring in October 2012 to better define the zone of migration on the eastern boundary of the landfill, GMP-04 through GMP-07 located closer to the landfill are typically monitored on a quarterly basis but are sentry probes and are no longer utilized as the compliance probes in accordance with Missouri Solid Waste Law and Rules. Tables 1 through 4 present the probe results for the monitoring period November 21, 2012 through July 5, 2013.

Along the southern boundary of the landfill, adjacent to Boenker Road, GMP-01 has continued to show elevated levels above the regulatory threshold. Corrective measures have not been effective to address the migration in this vicinity. Corrective actions taken to date have focused on methane migration within the soil overburden due to investigative action demonstrating shallow migration. However, after the installation of the interceptor trench, which was constructed to the soil/bedrock interface between the waste disposal area and impacted GMP-01, elevated levels continued to be exhibited in GMP-01. Due to the ineffectiveness of the perimeter gas wells (2005) and interceptor trench (2010) installed in the vicinity of GMP-01 to eliminate or reduce methane impacts, further investigation was deemed necessary under the conditions of the Settlement Agreement.

In order to effectively determine the zone of migration in the vicinity of GMP-01, temporary probes (TMP-1, TMP-2 and TMP-3) were installed as investigation probes to better define the zone of migration. In order to do this, each temporary probe were installed as nested probes with three monitored zones – shallow (S), middle (M) and deep (D). The shallow zone was screened within the soil overburden; the middle zone was screened through the uppermost weathered/fractured bedrock and the deep zone within the saturated bedrock. As presented in Appendix A, TMP-1 located west of GMP-01 is impacted with elevated methane levels within the soil overburden and weathered bedrock. TMP-2, located east of GMP-01, and TMP-3, located north of GMP-01, has observed elevated methane in each of the monitored zones. It is likely the observed elevated methane within the deep monitored zone observed in TMP-2 and TMP-3 are a result of diffusion transport due to these probes located less than 75 feet from the waste mass as well as the pressure-gradient force caused by the SSE as noted with increased relative pressure during monitoring of the probes.

As noted in the TMP boring logs, weathered bedrock was observed at lower elevations than the base of the interceptor trench. TMP-1, located west of GMP-1, the weathered bedrock was observed between 36 feet below ground surface (bgs) to 66.5 feet bgs. TMP-2, located east of GMP-1, the weathered bedrock was observed between 18 feet bgs to 47 feet bgs. TMP-3, located between the landfill and GMP-1, the weathered bedrock was observed between 31 feet bgs to 50 feet bgs. TMP-2, located between the landfill and GMP-1, the weathered bedrock was observed between 31 feet bgs to 50 feet bgs. Due to weathered bedrock observed at lower elevations than the base of the interceptor trench, it is likely methane continues to migrate through these weathered zones. Table 3 presents the temporary gas monitoring probe data.

The intensification of the SSE in 2012, resulting in increased pressure within the landfill, brought challenges associated within dewatering the interceptor trench located south of the waste boundary and maintaining sufficient vacuum on select gas extraction wells located within the south quarry. As a result, elevated levels of methane continue to be observed since October 2012.

Currently the public safety probes located across Boenker Road, on private property (GMP-09, GMP-10, GMP-11, and GMP-12) have no detectable levels of methane and have not observed elevated methane in two years (GMP-11). There is no evidence of methane migration onto adjacent properties at this time. Table 4 presents the gas monitoring probe data for the public safety probes.

Along the east property boundary, adjacent to the south quarry, elevated methane has been observed at two gas monitoring probe locations utilized for compliance: GMP-5S, GMP-14S, GMP-14D. The gas monitoring probes installed between August and September 2012 were installed as nested probes with two monitoring zones - shallow (S) and deep (D). The shallow zone was screened within the soil overburden; the deep zone was screened through the uppermost weathered bedrock to approximately 10 feet below the historic low water table.

The intent of these nested probes is to determine if methane migration is occurring at the property boundary as well as to ascertain the zone in which it is occurring. Similar to GMP-01, weathered bedrock was observed below the soil overburden at GMP-14 where GMP-14D is screened. The weathered bedrock is likely providing a zone of migration within the deeper zone, GMP-14D.

As described in Section 3.0, Bridgeton Landfill has performed recent improvements that should ultimately reduce landfill gas migration.

3.0 RECENT GAS MIGRATION CONTROL EFFORTS

Many recent additional measures have been recently undertaken that should ultimately reduce gas migration, including:

1. The SSE has impacted the facility's infrastructure designed to remove liquid efficiently from the waste mass which results in increased liquid in the force main and the gas conveyance system resulting in a reduction of their efficiency to remove landfill gas. Adding new gas extraction wells, replacing compromised gas extraction wells, and adding liquid pumps and extraction points will improve landfill gas collection and improve overall efficiency of the system. The following features have been installed per the November 27, 2012 CAP and in addition to the measures proposed in the CAP:

    - In November 2012 the Bridgeton Landfill installed 5 new trench wells, 5 new liquid sumps, and 7 new gas extraction wells.
    - During the January 1, 2013 through June 30, 2013 period the following additional extraction points were installed at the Bridgeton Landfill:
    - In February 2013 the Bridgeton Landfill installed 9 new gas extraction wells,
    - In March 2013 the Bridgeton Landfill installed 3 new gas extraction wells,
    - In April 2013 the Bridgeton Landfill installed 11 new gas extraction wells,
    - In May 2013 the Bridgeton Landfill installed 13 new gas extraction wells,

2. Addition of a 2,500 scfm utility flare in the southeastern portion of the disposal area in June 2013. This flare has improved vacuum distribution around the well field, especially in the southern and southeastern end where migration has been problematic.

3. Installation of 25 perimeter liquid sumps connected by perforated liquid/gas collection piping in May and June 2013. These were installed as part of the South Quarry capping project, and will allow collection of additional gas at the perimeter of the landfill, and

4. Placement of 32 acres of geomembrane cap and enhanced gas collection features which should be completed in August 2013. The cap will allow additional vacuum to be pulled from the cover integrity system consisting of a composite liner system which will reduce concern for oxygen intrusion. This should result in better long term gas capture and, in time, reduced gas pressure.

An updated as-built map that shows all of these features that were in place as of June 30, 2013 is included in Appendix C.

Due to the increased liquid generation and increased pressure within the landfill the improvements completed within the past nine months have not yet resulted in a reduction of methane observed within the gas monitoring probes. It is premature to evaluate the

effectiveness of the recent gas migration control efforts outlined in this section due to impacts associated with increased liquid generation and the continued dynamic movement and changes of the SSE in the South Quarry area.

4.0 PROPOSED AND ONGOING GAS MIGRATION CONTROL EFFORTS

The recent additional measures outlined in Section 3.0 are on-going efforts to improve landfill gas control at the Bridgeton Landfill. These upgrades should reduce pressure within the waste mass that may be contributing to the exceedances and in turn alleviate methane migration along the southern and eastern property boundaries. Improvements to the landfill are on-going and will continue until the SSE is controlled. Below are additional improvements that are being proposed or currently implemented:

1. The SSE has resulted in an increase in condensate generation. In order to improve liquid removal at the site a third party consultant has been contracted to evaluate the effectiveness of the existing force main. Due to the increased liquid movement within the force main pressure has built up within the system resulting in back pressure and reduced pump functionality. Pressure relief valves have been installed on numerous pneumatic pumps to address this issue. However, due to the increased liquid generation additional capacity within the force main is needed. As such, the preliminary design proposes utilizing the existing force main for management of liquid removed from the LCSs and a second separate force main for liquids removed from the remaining extraction points. The additional liquid force main will allow optimum operations of the pumps while providing increased available vacuum on the landfill gas collection system. This corrective action measure will be submitted to the MDNR in third quarter 2013 sealed by a Missouri Professional Engineer.

2. In order to improve liquid management once the liquids are removed from the disposal area the Bridgeton Landfill has contracted with a third party consulting firm for additional storage and pretreatment of the extracted liquid. During the second quarter 2013 the landfill installed a 316,000 gallon above ground liquid storage and treatment tank The preliminary treatment plant design includes incorporation of the existing 96,000 gallon tank located near Boenker Road, the newly installed 316,000 gallon tank, four-1,000,000 gallon tanks and a pretreatment facility. This will provide the landfill additional capacity to remove the liquid from the disposal area at a design capacity of 300,000 gallons per day. The treatment plant design will be submitted to the MDNR in third quarter 2013 sealed by a Missouri Professional Engineer.

3. The Bridgeton Landfill has submitted a Permit to Construct application to the St. Louis County Department of Health for the installation of two 4,000 scfm utility flares. These utility flares would replace the existing enclosed flares with a design flow of 3,500 scfm each. The replacement of the enclosed flares with the two 4,000 scfm utility flares coupled with the existing 3,500 scfm John Zink utility flare and the 2,500 scfm LFG Specialties utility flare will provide a combined design flow of the four utility flares of 14,000 scfm. Authorization to Construct is anticipated to be issued by the end of July 2013. The installation of the 4,000 scfm utility flares is anticipated to be completed shortly after permit issuance with operations of each unit by the end of third quarter

2013. Utility flares are better suited to handle the lower heating value gas at the Bridgeton Landfill resulting in less downtime of the control devices.

4. A natural gas line has been installed in the vicinity of the flare compound. It will be connected to the gas collection system if the lower heating value or hydrogen concentration drop below levels to effectively operate the landfill gas control devices.

5. The Bridgeton Landfill will be upgrading the landfill gas coolers at the east utility flare (2,500 scfm LFG Specialties) and at the flare compound in the near future. This improvement will result in additional vacuum available to the well field.

The improvements associated with the liquid conveyance system and the landfill gas control devices are essential to address methane migration at the facility. These efforts should result in a decrease in pressure within the landfill and improved landfill gas collection efficiencies within the south quarry. The liquid force main modification and the liquid treatment system will be submitted to the MDNR for review and approval. The landfill appreciates the continued support to address the SSE in a timely manner and appreciates an expedited review of these submittals.

Monitoring results of the nested gas and temporary monitoring probes have shown that methane is migrating through the weathered bedrock and additional controls are likely needed to address these exceedances. However, due to increased liquid generation associated with the SSE, the effectiveness of the recent improvements could not be determined. It is requested to further evaluate the zone of migration of the impacted gas monitoring and temporary monitoring probes with weekly water level readings and monitoring of the impacted probes to better delineate if methane is migrating through deeper zones. It is requested that this evaluation period be extended through the third quarter 2013. At that time a comprehensive corrective action plan will be submitted evaluating the impact of the recently-completed capping, other recent measures, and the proposed measures described above. During this period the landfill will continue to complete improvements to the liquid conveyance system in efforts to minimize liquids within the gas collection system.

5.0 CONTINUED MONITORING AND REPORTING

The Bridgeton Landfill will initiate weekly monitoring of all monitoring probes including the gas monitoring probes, sentry probes and temporary monitoring probes. The Bridgeton Landfill proposes that landfill gas corrective summary reports to be incorporated into the quarterly report and submitted by the 15th of each month following a calendar quarter. These reports will summarize all corrective action completed to address methane migration within the prior quarter and, if elevated levels persist, provide a corrective action plan to address the methane exceedances.

Bridgeton Landfill understands that the submittal of quarterly landfill gas corrective action summary reports and corrective action plans is at a higher frequency than outlined in Paragraph 4 of the January 17, 2011 Settlement Agreement between the MDNR and the Bridgeton Landfill but believes that incorporation in the quarterly report is valuable.

This section of the report will include at a minimum a review previous data, evaluate effectiveness of efforts made to control migration, and propose additional measures directed at eliminating detection levels in gas monitoring probes. As a regular procedure, these reports will be submitted by the 15th of each month following a calendar quarter.

Bridgeton Landfill will continue to take aggressive action to control the impacts of the SSE, evaluate corrective measures to address methane migration within the weathered bedrock and improve gas collection within the limits of waste. Any major new gas migration control features needed--particularly those located outside the limit of waste--would be designed and sealed by a Missouri professional engineer and submitted to the MDNR for comment and approval.

The MDNR will continue to provide ongoing review, comment, and approval of actions as it deems necessary. This reporting process will continue until Bridgeton Landfill demonstrates uninterrupted compliance with the MDNR's methane regulations (all compliance gas monitoring probes less than 2.5% methane) for a period of one year.

TABLES

TABLE 1 - GAS MONITORING PROBE DATA **Bridgeton Landfill, LLC**
11/21/2012 through 07/05/2013

POINT IDENTIFICATION	SAMPLE DATE - TIME	METHANE [CH_4] (%)	CARBON DIOXIDE [CO_2] (%)	OXYGEN [O_2] (%)	BALANCE [N_2] (%)	BAROMETROC PRESSURE (in. Hg)	CARBON MONOXIDE [CO] (ppm)	HYDROGEN SULFIDE [H_2S] (ppm)	RELATIVE PRESSURE (in. H2O)	COMMENT
BRGMP13D	11/21/2012 13:24	0.0	1.3	15.5	83.2	29.63	ND	ND	0.06	No Change
BRGMP13D	11/29/2012 11:07	0.0	4.9	14.8	80.3	29.61	ND	ND	0.04	No Change
BRGMP13D	12/6/2012 15:36	0.0	2.3	15.0	82.7	29.35	ND	ND	0	No Change
BRGMP13D	12/12/2012 15:13	0.0	2.2	14.7	83.1	29.63	ND	ND	0.02	No Change
BRGMP13D	12/18/2012 10:55	0.0	2.4	14.2	83.4	29.18	ND	ND	0.26	No Change
BRGMP13D	12/28/2012 14:59	0.0	2.9	15.1	82.0	29.32	ND	ND	0.03	No Change
BRGMP13D	1/4/2013 8:59	0.0	2.3	15.7	82.0	29.82	ND	ND	0.01	No Change
BRGMP13D	1/10/2013 13:36	0.0	2.4	14.9	82.7	29.45	ND	ND	0.19	No Change
BRGMP13D	1/18/2013 9:36	0.0	1.2	15.0	83.8	29.83	ND	ND	0.15	No Change
BRGMP13D	1/25/2013 10:36	0.0	4.2	14.6	81.2	29.59	ND	ND	-0.04	No Change
BRGMP13D	2/1/2013 9:57	0.0	2.9	17.6	79.5	29.74	ND	ND	0.11	No Change
BRGMP13D	2/6/2013 14:19	0.0	1.8	16.0	82.2	29.53	ND	ND	-0.03	No Change
BRGMP13D	2/15/2013 13:30	0.0	2.1	16.4	81.5	29.47	ND	ND	0.13	No Change
BRGMP13D	2/22/2013 10:48	0.0	3.6	17.0	79.4	29.16	ND	ND	0.03	No Change
BRGMP13D	2/28/2013 15:23	0.0	1.7	17.6	80.7	29.26	ND	ND	0	No Change
BRGMP13D	3/8/2013 12:25	0.0	1.8	18.6	79.6	29.72	ND	ND	-0.28	No Change
BRGMP13D	3/14/2013 10:37	0.0	1.1	17.3	81.6	29.51	ND	ND	0.13	No Change
BRGMP13D	3/21/2013 11:42	0.0	0.6	18.1	81.3	29.46	ND	ND	0	No Change
BRGMP13D	3/28/2013 13:39	0.0	0.8	17.3	81.9	29.81	ND	ND	0	No Change
BRGMP13D	4/4/2013 15:24	0.0	0.7	17.4	81.9	29.56	ND	ND	0	No Change
BRGMP13D	4/11/2013 10:47	0.0	0.6	18.5	80.9	29.06	ND	ND	0	No Change
BRGMP13D	5/3/2013 14:04	0.0	1.5	18.6	79.9	29.28	ND	ND	0.05	No Change
BRGMP13D	5/10/2013 11:05	0.0	0.8	19.4	79.8	29.42	0	202	0	No Change
BRGMP13D	5/17/2013 9:40	0.0	0.6	19.3	80.1	29.45	0	201	0	No Change
BRGMP13D	5/24/2013 15:24	0.0	0.5	19.2	80.3	29.80	0	32767	0	No Change
BRGMP13D	5/31/2013 10:20	0.0	0.5	19.7	79.8	29.35	0	205	0	No Change
BRGMP13D	6/7/2013 15:06	0.0	0.6	21.3	78.1	29.29	ND	ND	0	No Change
BRGMP13D	6/14/2013 14:49	0.0	0.9	19.3	79.8	29.48	ND	ND	0	No Change
BRGMP13D	6/21/2013 15:15	0.5	2.2	19.7	77.6	29.45	ND	ND	-0.23	No Change

TABLE 1 - GAS MONITORING PROBE DATA **Bridgeton Landfill, LLC**
11/21/2012 through 07/05/2013

POINT IDENTIFICATION	SAMPLE DATE - TIME	METHANE [CH_4] (%)	CARBON DIOXIDE [CO_2] (%)	OXYGEN [O_2] (%)	BALANCE [N_2] (%)	BAROMETROC PRESSURE (in. Hg)	CARBON MONOXIDE [CO] (ppm)	HYDROGEN SULFIDE [H_2S] (ppm)	RELATIVE PRESSURE (in. H2O)	COMMENT
BRGMP13D	6/27/2013 13:35	0.0	0.6	18.6	80.8	29.33	ND	ND	0	No Change
BRGMP13D	7/5/2013 15:09	0.0	0.5	16.4	83.1	29.49	ND	ND	0.04	No Change
BRGMP13S	11/21/2012 13:22	0.0	2.6	14.8	82.6	29.63	ND	ND	0	No Change
BRGMP13S	11/29/2012 11:06	0.0	7.1	14.1	78.8	29.61	ND	ND	-0.03	No Change
BRGMP13S	11/29/2012 11:06	0.0	6.6	14.2	79.2	29.61	ND	ND	-0.13	No Change
BRGMP13S	12/6/2012 15:34	0.0	4.4	14.7	80.9	29.35	ND	ND	0.01	No Change
BRGMP13S	12/12/2012 15:12	0.0	1.9	15.1	83.0	29.63	ND	ND	0	No Change
BRGMP13S	12/18/2012 10:54	0.0	4.6	14.6	80.8	29.18	ND	ND	-0.9	No Change
BRGMP13S	12/28/2012 14:57	0.0	5.7	15.3	79.0	29.32	ND	ND	-0.27	No Change
BRGMP13S	1/4/2013 8:56	0.0	4.5	16.3	79.2	29.81	ND	ND	0	No Change
BRGMP13S	1/10/2013 13:35	0.0	5.0	16.0	79.0	29.44	ND	ND	-0.34	No Change
BRGMP13S	1/18/2013 9:35	0.0	0.8	17.3	81.9	29.83	ND	ND	0.12	No Change
BRGMP13S	1/25/2013 10:35	0.0	8.6	14.4	77.0	29.59	ND	ND	0.07	No Change
BRGMP13S	2/1/2013 9:56	0.0	3.3	19.4	77.3	29.75	ND	ND	0.11	No Change
BRGMP13S	2/6/2013 14:18	0.0	2.7	17.2	80.1	29.53	ND	ND	-0.03	No Change
BRGMP13S	2/15/2013 13:29	0.1	2.7	18.8	78.4	29.46	ND	ND	0.11	No Change
BRGMP13S	2/22/2013 10:48	0.0	5.0	18.0	77.0	29.16	ND	ND	0.08	No Change
BRGMP13S	2/28/2013 15:22	0.0	3.3	19.7	77.0	29.26	ND	ND	0	No Change
BRGMP13S	3/8/2013 12:24	0.0	1.9	18.1	80.0	29.73	ND	ND	-0.01	No Change
BRGMP13S	3/14/2013 10:36	0.0	1.6	19.4	79.0	29.51	ND	ND	0.11	No Change
BRGMP13S	3/21/2013 11:41	0.0	1.3	18.7	80.0	29.46	ND	ND	0	No Change
BRGMP13S	3/28/2013 13:38	0.0	1.3	18.8	79.9	29.81	ND	ND	0	No Change
BRGMP13S	4/4/2013 15:23	0.0	1.2	18.7	80.1	29.55	ND	ND	0	No Change
BRGMP13S	4/11/2013 10:46	0.0	1.1	19.1	79.8	29.06	ND	ND	0	No Change
BRGMP13S	5/3/2013 14:03	0.0	3.8	18.5	77.7	29.27	ND	ND	0.07	No Change
BRGMP13S	5/10/2013 11:03	0.0	1.5	20.2	78.3	29.42	0	202	0.1	No Change
BRGMP13S	5/17/2013 9:39	0.0	1.2	19.6	79.2	29.45	0	201	0	No Change
BRGMP13S	5/24/2013 15:23	0.0	1.1	19.6	79.3	29.80	0	32767	0	No Change
BRGMP13S	5/31/2013 10:18	0.0	0.7	20.3	79.0	29.35	0	204	0	No Change

TABLE 1 - GAS MONITORING PROBE DATA **Bridgeton Landfill, LLC**
11/21/2012 through 07/05/2013

POINT IDENTIFICATION	SAMPLE DATE - TIME	METHANE [CH_4] (%)	CARBON DIOXIDE [CO_2] (%)	OXYGEN [O_2] (%)	BALANCE [N_2] (%)	BAROMETROC PRESSURE (in. Hg)	CARBON MONOXIDE [CO] (ppm)	HYDROGEN SULFIDE [H_2S] (ppm)	RELATIVE PRESSURE (in. H2O)	COMMENT
BRGMP13S	6/7/2013 15:05	0.0	1.0	21.3	77.7	29.29	ND	ND	0	No Change
BRGMP13S	6/14/2013 14:48	0.1	1.4	19.2	79.3	29.48	ND	ND	0	No Change
BRGMP13S	6/21/2013 15:14	0.0	2.2	19.5	78.3	29.45	ND	ND	-0.22	No Change
BRGMP13S	6/27/2013 13:34	0.0	0.7	18.4	80.9	29.33	ND	ND	0.08	No Change
BRGMP13S	7/5/2013 15:07	0.0	2.6	14.9	82.5	29.49	ND	ND	0	No Change
BRGMP14D	11/21/2012 13:34	2.1	12.1	15.9	69.9	29.63	ND	ND	0	No Change
BRGMP14D	11/29/2012 11:20	0.0	13.4	15.9	70.7	29.60	ND	ND	-0.04	No Change
BRGMP14D	12/6/2012 15:47	2.0	13.0	16.5	68.5	29.35	ND	ND	0	No Change
BRGMP14D	12/12/2012 15:21	1.6	10.8	16.7	70.9	29.63	ND	ND	0.01	No Change
BRGMP14D	12/18/2012 11:06	2.9	14.9	15.5	66.7	29.16	ND	ND	-1.12	No Change
BRGMP14D	12/28/2012 15:13	4.4	12.1	17.6	65.9	29.34	ND	ND	-0.33	No Change
BRGMP14D	1/4/2013 9:10	1.9	11.0	18.4	68.7	29.82	ND	ND	-0.02	No Change
BRGMP14D	1/10/2013 13:51	0.8	16.1	16.7	66.4	29.45	ND	ND	0.54	No Change
BRGMP14D	1/18/2013 9:45	0.5	18.4	15.9	65.2	29.83	ND	ND	0.11	No Change
BRGMP14D	1/25/2013 10:46	0.5	16.4	17.0	66.1	29.59	ND	ND	0.12	No Change
BRGMP14D	2/1/2013 10:04	0.9	16.4	18.7	64.0	29.75	ND	ND	0.11	No Change
BRGMP14D	2/6/2013 14:12	0.7	19.3	16.4	63.6	29.53	ND	ND	0	No Change
BRGMP14D	2/15/2013 13:38	0.7	18.3	17.4	63.6	29.47	ND	ND	0.17	No Change
BRGMP14D	2/22/2013 11:04	0.6	19.8	17.6	62.0	29.15	ND	ND	0.13	No Change
BRGMP14D	2/28/2013 15:32	0.7	18.3	17.7	63.3	29.25	ND	ND	0.01	No Change
BRGMP14D	3/8/2013 12:19	1.1	23.1	15.1	60.7	29.72	ND	ND	0.1	No Change
BRGMP14D	3/14/2013 10:30	1.9	26.3	15.3	56.5	29.51	ND	ND	0.14	No Change
BRGMP14D	3/21/2013 11:55	2.3	12.9	17.8	67.0	29.46	ND	ND	0.02	No Change
BRGMP14D	3/28/2013 13:50	14.6	33.0	10.8	41.6	29.80	ND	ND	0.01	No Change
BRGMP14D	4/4/2013 15:32	26.6	41.3	6.5	25.6	29.55	ND	ND	0.05	No Change
BRGMP14D	4/11/2013 10:59	27.5	38.2	6.8	27.5	29.07	ND	ND	0.25	No Change
BRGMP14D	5/3/2013 14:13	36.4	38.6	4.6	20.4	29.27	ND	ND	0.01	No Change
BRGMP14D	5/10/2013 11:15	39.5	40.5	3.6	16.4	29.43	0	207	0.33	No Change
BRGMP14D	5/17/2013 9:49	41.0	34.0	4.4	20.6	29.45	0	210	0.26	No Change

TABLE 1 - GAS MONITORING PROBE DATA **Bridgeton Landfill, LLC**
11/21/2012 through 07/05/2013

POINT IDENTIFICATION	SAMPLE DATE - TIME	METHANE [CH_4] (%)	CARBON DIOXIDE [CO_2] (%)	OXYGEN [O_2] (%)	BALANCE [N_2] (%)	BAROMETROC PRESSURE (in. Hg)	CARBON MONOXIDE [CO] (ppm)	HYDROGEN SULFIDE [H_2S] (ppm)	RELATIVE PRESSURE (in. H2O)	COMMENT
BRGMP14D	5/24/2013 15:35	41.8	35.8	4.4	18.0	29.80	0	32767	0.19	No Change
BRGMP14D	5/31/2013 10:30	38.7	34.4	4.7	22.2	29.36	0	218	0.07	No Change
BRGMP14D	6/7/2013 15:14	11.9	9.3	17.1	61.7	29.29	ND	ND	-1.55	No Change
BRGMP14D	6/14/2013 14:57	54.3	34.4	1.6	9.7	29.49	ND	ND	0.1	No Change
BRGMP14D	6/21/2013 15:23	54.3	35.6	0.5	9.6	29.45	ND	ND	-0.23	No Change
BRGMP14D	6/27/2013 13:46	51.8	32.7	1.6	13.9	29.33	ND	ND	0.07	No Change
BRGMP14D	7/5/2013 15:18	54.3	29.4	1.5	14.8	29.49	ND	ND	0.3	No Change
BRGMP14S	11/21/2012 13:31	3.6	14.9	14.1	67.4	29.63	ND	ND	0	No Change
BRGMP14S	11/29/2012 11:19	0.0	14.0	14.9	71.1	29.60	ND	ND	-0.05	No Change
BRGMP14S	12/6/2012 15:45	4.2	16.3	14.3	65.2	29.35	ND	ND	0.01	No Change
BRGMP14S	12/12/2012 15:20	4.7	11.6	15.1	68.6	29.63	ND	ND	0.05	No Change
BRGMP14S	12/18/2012 11:03	8.8	21.7	11.9	57.6	29.17	ND	ND	-0.64	No Change
BRGMP14S	12/28/2012 15:14	11.0	19.8	13.2	56.0	29.34	ND	ND	-0.21	No Change
BRGMP14S	1/4/2013 9:08	10.5	20.5	13.6	55.4	29.82	ND	ND	0	No Change
BRGMP14S	1/10/2013 13:50	6.2	21.8	13.3	58.7	29.45	ND	ND	-0.44	No Change
BRGMP14S	1/18/2013 9:43	8.1	27.6	11.4	52.9	29.84	ND	ND	-0.2	No Change
BRGMP14S	1/25/2013 10:45	5.6	16.2	15.1	63.1	29.59	ND	ND	0.1	No Change
BRGMP14S	2/1/2013 10:03	7.4	12.0	18.3	62.3	29.75	ND	ND	0.14	No Change
BRGMP14S	2/6/2013 14:11	6.1	12.7	16.0	65.2	29.53	ND	ND	-0.01	No Change
BRGMP14S	2/15/2013 13:36	4.5	7.9	18.5	69.1	29.47	ND	ND	0.17	No Change
BRGMP14S	2/22/2013 11:03	3.0	7.1	19.3	70.6	29.14	ND	ND	0.13	No Change
BRGMP14S	2/28/2013 15:29	2.4	5.5	19.7	72.4	29.26	ND	ND	0	No Change
BRGMP14S	3/8/2013 12:18	1.8	5.4	18.0	74.8	29.72	ND	ND	0.07	No Change
BRGMP14S	3/14/2013 10:29	3.1	8.5	18.2	70.2	29.51	ND	ND	0.12	No Change
BRGMP14S	3/21/2013 11:52	3.8	8.6	17.6	70.0	29.46	ND	ND	0	No Change
BRGMP14S	3/28/2013 13:47	2.7	6.6	18.4	72.3	29.80	ND	ND	0.09	No Change
BRGMP14S	4/4/2013 15:31	5.4	11.0	16.5	67.1	29.55	ND	ND	0	No Change
BRGMP14S	4/11/2013 10:57	3.2	7.6	17.8	71.4	29.06	ND	ND	-0.07	No Change
BRGMP14S	5/3/2013 14:11	2.2	2.2	19.1	76.5	29.27	ND	ND	0.04	No Change

TABLE 1 - GAS MONITORING PROBE DATA **Bridgeton Landfill, LLC**
11/21/2012 through 07/05/2013

POINT IDENTIFICATION	SAMPLE DATE - TIME	METHANE [CH_4] (%)	CARBON DIOXIDE [CO_2] (%)	OXYGEN [O_2] (%)	BALANCE [N_2] (%)	BAROMETROC PRESSURE (in. Hg)	CARBON MONOXIDE [CO] (ppm)	HYDROGEN SULFIDE [H_2S] (ppm)	RELATIVE PRESSURE (in. H2O)	COMMENT
BRGMP14S	5/10/2013 11:13	2.3	3.9	18.9	74.9	29.43	0	203	-0.02	No Change
BRGMP14S	5/17/2013 9:47	1.8	2.8	19.1	76.3	29.45	0	201	0.04	No Change
BRGMP14S	5/24/2013 15:33	1.7	2.5	19.3	76.5	29.80	0	32767	0.01	No Change
BRGMP14S	5/31/2013 10:27	1.5	2.2	19.3	77.0	29.36	0	206	0	No Change
BRGMP14S	6/7/2013 15:12	0.5	1.1	21.4	77.0	29.29	ND	ND	0	No Change
BRGMP14S	6/14/2013 14:55	0.8	1.4	19.6	78.2	29.49	ND	ND	0	No Change
BRGMP14S	6/21/2013 15:21	0.7	2.1	20.7	76.5	29.45	ND	ND	-0.18	No Change
BRGMP14S	6/27/2013 13:44	1.0	3.7	17.2	78.1	29.33	ND	ND	0.04	No Change
BRGMP14S	7/5/2013 15:16	0.7	3.0	15.5	80.8	29.49	ND	ND	0.01	No Change
BRGMP15D	11/21/2012 13:53	0.0	1.8	18.4	79.8	29.63	ND	ND	0.09	No Change
BRGMP15D	11/29/2012 11:32	0.0	2.0	19.3	78.7	29.60	ND	ND	-0.04	No Change
BRGMP15D	12/6/2012 16:06	0.0	3.0	19.1	77.9	29.36	ND	ND	0	No Change
BRGMP15D	12/12/2012 15:48	0.0	3.8	18.6	77.6	29.63	ND	ND	-0.02	No Change
BRGMP15D	12/18/2012 11:17	0.0	3.7	18.9	77.4	29.15	ND	ND	0.85	No Change
BRGMP15D	12/28/2012 15:33	0.0	4.8	17.8	77.4	29.34	ND	ND	0.11	No Change
BRGMP15D	1/4/2013 9:33	0.0	3.1	19.3	77.6	29.83	ND	ND	0.05	No Change
BRGMP15D	1/10/2013 14:05	0.0	4.1	18.4	77.5	29.45	ND	ND	-1.26	No Change
BRGMP15D	1/18/2013 10:00	0.0	4.1	18.5	77.4	29.83	ND	ND	0.77	No Change
BRGMP15D	1/25/2013 10:58	0.0	3.8	18.7	77.5	29.59	ND	ND	0.18	No Change
BRGMP15D	2/1/2013 10:18	0.0	4.2	20.2	75.6	29.74	ND	ND	0.15	No Change
BRGMP15D	2/6/2013 14:07	0.0	3.6	13.4	83.0	29.54	ND	ND	0.15	No Change
BRGMP15D	2/15/2013 13:50	0.0	3.7	15.4	80.9	29.47	ND	ND	0.2	No Change
BRGMP15D	2/22/2013 11:18	0.0	3.6	19.1	77.3	29.15	ND	ND	0.1	No Change
BRGMP15D	2/28/2013 15:52	0.0	3.6	19.8	76.6	29.24	ND	ND	0.04	No Change
BRGMP15D	3/8/2013 11:01	0.0	3.5	18.4	78.1	29.73	ND	ND	0.11	No Change
BRGMP15D	3/14/2013 10:22	0.0	3.1	18.7	78.2	29.53	ND	ND	0.24	No Change
BRGMP15D	3/21/2013 13:30	0.0	1.7	19.7	78.6	29.46	ND	ND	0.29	No Change
BRGMP15D	3/28/2013 14:16	0.0	2.9	18.4	78.7	29.78	ND	ND	0.83	No Change
BRGMP15D	4/4/2013 15:51	0.0	2.5	18.9	78.6	29.55	ND	ND	0	No Change

TABLE 1 - GAS MONITORING PROBE DATA **Bridgeton Landfill, LLC**
11/21/2012 through 07/05/2013

POINT IDENTIFICATION	SAMPLE DATE - TIME	METHANE [CH_4] (%)	CARBON DIOXIDE [CO_2] (%)	OXYGEN [O_2] (%)	BALANCE [N_2] (%)	BAROMETROC PRESSURE (in. Hg)	CARBON MONOXIDE [CO] (ppm)	HYDROGEN SULFIDE [H_2S] (ppm)	RELATIVE PRESSURE (in. H2O)	COMMENT
BRGMP15D	4/11/2013 11:26	0.0	2.4	19.2	78.4	29.08	ND	ND	-0.01	No Change
BRGMP15D	5/3/2013 15:06	0.0	1.0	21.2	77.8	29.25	ND	ND	0	No Change
BRGMP15D	5/10/2013 11:53	0.0	4.3	19.6	76.1	29.43	0	203	0.15	No Change
BRGMP15D	5/17/2013 11:04	0.0	3.8	19.8	76.4	29.50	0	205	0	No Change
BRGMP15D	5/24/2013 16:18	0.0	1.3	20.5	78.2	29.81	0	32767	0.01	No Change
BRGMP15D	5/31/2013 11:10	0.0	2.7	20.4	76.9	29.35	0	208	0	No Change
BRGMP15D	6/7/2013 15:33	0.0	1.3	21.8	76.9	29.29	ND	ND	0.06	No Change
BRGMP15D	6/14/2013 15:50	0.0	1.5	20.4	78.1	29.49	ND	ND	0	No Change
BRGMP15D	6/21/2013 15:44	0.0	1.3	21.6	77.1	29.43	ND	ND	0.02	No Change
BRGMP15D	6/27/2013 14:38	0.0	0.5	18.9	80.6	29.34	ND	ND	0.1	No Change
BRGMP15D	7/5/2013 16:04	0.0	0.7	17.3	82.0	29.49	ND	ND	0.07	No Change
BRGMP15S	11/21/2012 13:51	0.0	6.1	9.5	84.4	29.63	ND	ND	0	No Change
BRGMP15S	11/29/2012 11:31	0.0	2.8	16.0	81.2	29.59	ND	ND	-0.04	No Change
BRGMP15S	12/6/2012 16:05	0.0	4.5	11.4	84.1	29.36	ND	ND	0	No Change
BRGMP15S	12/12/2012 15:47	0.0	3.8	11.9	84.3	29.63	ND	ND	-0.09	No Change
BRGMP15S	12/18/2012 11:15	0.0	7.3	11.8	80.9	29.15	ND	ND	-0.51	No Change
BRGMP15S	12/28/2012 15:31	0.0	4.2	13.5	82.3	29.34	ND	ND	-0.12	No Change
BRGMP15S	1/4/2013 9:31	0.0	5.4	13.5	81.1	29.83	ND	ND	0	No Change
BRGMP15S	1/10/2013 14:04	0.0	3.7	14.3	82.0	29.45	ND	ND	-0.87	No Change
BRGMP15S	1/18/2013 9:58	0.0	3.5	15.1	81.4	29.83	ND	ND	-0.13	No Change
BRGMP15S	1/25/2013 10:57	0.0	2.3	15.2	82.5	29.59	ND	ND	0.08	No Change
BRGMP15S	2/1/2013 10:17	0.0	3.7	14.7	81.6	29.74	ND	ND	0.1	No Change
BRGMP15S	2/6/2013 14:07	0.0	2.6	13.4	84.0	29.54	ND	ND	-0.02	No Change
BRGMP15S	2/15/2013 13:50	0.0	3.1	15.5	81.4	29.47	ND	ND	0.13	No Change
BRGMP15S	2/22/2013 11:17	0.0	2.6	15.8	81.6	29.15	ND	ND	0.1	No Change
BRGMP15S	2/28/2013 15:51	0.0	3.8	13.8	82.4	29.24	ND	ND	0	No Change
BRGMP15S	3/8/2013 11:00	0.0	3.0	12.6	84.4	29.73	ND	ND	0.02	No Change
BRGMP15S	3/14/2013 10:21	0.0	3.5	14.2	82.3	29.53	ND	ND	0.22	No Change
BRGMP15S	3/21/2013 13:28	0.0	2.5	16.6	80.9	29.46	ND	ND	0.1	No Change

TABLE 1 - GAS MONITORING PROBE DATA **Bridgeton Landfill, LLC**
11/21/2012 through 07/05/2013

POINT IDENTIFICATION	SAMPLE DATE - TIME	METHANE [CH_4] (%)	CARBON DIOXIDE [CO_2] (%)	OXYGEN [O_2] (%)	BALANCE [N_2] (%)	BAROMETROC PRESSURE (in. Hg)	CARBON MONOXIDE [CO] (ppm)	HYDROGEN SULFIDE [H_2S] (ppm)	RELATIVE PRESSURE (in. H2O)	COMMENT
BRGMP15S	3/28/2013 14:15	0.0	2.9	16.5	80.6	29.79	ND	ND	0.28	No Change
BRGMP15S	4/4/2013 15:50	0.0	2.7	17.4	79.9	29.56	ND	ND	0	No Change
BRGMP15S	4/11/2013 11:25	0.0	2.4	18.1	79.5	29.08	ND	ND	1.46	No Change
BRGMP15S	5/3/2013 15:05	0.0	3.1	20.2	76.7	29.26	ND	ND	0	No Change
BRGMP15S	5/10/2013 11:52	0.0	5.3	14.2	80.5	29.43	0	203	0	No Change
BRGMP15S	5/17/2013 11:03	0.0	7.3	9.6	83.1	29.47	0	205	0	No Change
BRGMP15S	5/24/2013 16:17	0.0	4.0	9.6	86.4	29.80	0	32767	0.02	No Change
BRGMP15S	5/31/2013 11:08	0.0	1.7	10.1	88.2	29.36	0	208	0	No Change
BRGMP15S	6/7/2013 15:32	0.0	3.1	19.1	77.8	29.29	ND	ND	-0.03	No Change
BRGMP15S	6/14/2013 15:48	0.0	3.9	10.8	85.3	29.49	ND	ND	0.05	No Change
BRGMP15S	6/21/2013 15:43	0.0	4.1	13.5	82.4	29.43	ND	ND	-0.22	No Change
BRGMP15S	6/27/2013 14:37	0.0	2.3	11.7	86.0	29.35	ND	ND	0	No Change
BRGMP15S	7/5/2013 16:02	0.0	0.6	11.6	87.8	29.50	ND	ND	0	No Change
BRGMP16D	11/21/2012 14:02	0.0	8.8	9.4	81.8	29.63	ND	ND	-0.01	No Change
BRGMP16D	11/29/2012 11:48	0.0	8.1	9.4	82.5	29.59	ND	ND	0	No Change
BRGMP16D	12/6/2012 16:23	0.0	8.5	9.5	82.0	29.36	ND	ND	-0.02	No Change
BRGMP16D	12/12/2012 15:52	0.0	1.1	19.9	79.0	29.63	ND	ND	0.01	No Change
BRGMP16D	12/18/2012 11:46	0.0	7.1	11.7	81.2	29.15	ND	ND	-1.01	No Change
BRGMP16D	12/28/2012 15:44	0.0	7.9	10.9	81.2	29.35	ND	ND	0.88	No Change
BRGMP16D	1/4/2013 9:50	0.0	7.4	13.1	79.5	29.84	ND	ND	0	No Change
BRGMP16D	1/10/2013 14:19	0.0	7.1	12.4	80.5	29.45	ND	ND	-1.19	No Change
BRGMP16D	1/18/2013 10:12	0.0	4.9	16.8	78.3	29.83	ND	ND	-0.42	No Change
BRGMP16D	1/25/2013 11:28	0.0	3.6	18.0	78.4	29.59	ND	ND	0.04	No Change
BRGMP16D	2/1/2013 10:28	0.0	6.8	16.9	76.3	29.74	ND	ND	0.17	No Change
BRGMP16D	2/6/2013 13:50	0.0	4.9	17.3	77.8	29.55	ND	ND	0.33	No Change
BRGMP16D	2/15/2013 14:04	0.0	5.8	17.7	76.5	29.47	ND	ND	0.03	No Change
BRGMP16D	2/22/2013 11:47	0.0	5.1	17.6	77.3	29.18	ND	ND	-0.03	No Change
BRGMP16D	2/28/2013 16:02	0.0	4.0	19.3	76.7	29.24	ND	ND	0	No Change
BRGMP16D	3/8/2013 10:51	0.0	0.4	20.8	78.8	29.74	ND	ND	-3.22	No Change

TABLE 1 - GAS MONITORING PROBE DATA **Bridgeton Landfill, LLC**
11/21/2012 through 07/05/2013

POINT IDENTIFICATION	SAMPLE DATE - TIME	METHANE [CH_4] (%)	CARBON DIOXIDE [CO_2] (%)	OXYGEN [O_2] (%)	BALANCE [N_2] (%)	BAROMETROC PRESSURE (in. Hg)	CARBON MONOXIDE [CO] (ppm)	HYDROGEN SULFIDE [H_2S] (ppm)	RELATIVE PRESSURE (in. H2O)	COMMENT
BRGMP16D	3/14/2013 10:05	0.0	1.0	19.5	79.5	29.57	ND	ND	-2.55	No Change
BRGMP16D	3/21/2013 13:42	0.0	0.3	20.6	79.1	29.44	ND	ND	0.38	No Change
BRGMP16D	3/28/2013 14:23	0.0	7.5	11.5	81.0	29.79	ND	ND	0.46	No Change
BRGMP16D	4/4/2013 15:57	0.0	1.0	20.1	78.9	29.56	ND	ND	0	No Change
BRGMP16D	4/11/2013 12:01	0.0	1.3	19.7	79.0	29.09	ND	ND	-0.21	No Change
BRGMP16D	5/3/2013 15:02	0.0	3.4	20.1	76.5	29.26	ND	ND	0.03	No Change
BRGMP16D	5/10/2013 11:58	0.0	2.1	20.3	77.6	29.43	0	204	0	No Change
BRGMP16D	5/17/2013 11:00	0.0	0.9	20.1	79.0	29.47	0	203	0	No Change
BRGMP16D	5/24/2013 16:15	0.0	1.6	20.1	78.3	29.80	0	32767	0	No Change
BRGMP16D	5/31/2013 11:04	0.0	3.9	19.9	76.2	29.36	0	210	-0.02	No Change
BRGMP16D	6/7/2013 15:38	0.0	1.3	21.6	77.1	29.29	ND	ND	-0.22	No Change
BRGMP16D	6/14/2013 15:45	0.0	2.5	20.0	77.5	29.49	ND	ND	0.01	No Change
BRGMP16D	6/21/2013 15:48	0.0	1.6	21.2	77.2	29.43	ND	ND	-0.25	No Change
BRGMP16D	6/27/2013 14:33	0.0	1.1	18.4	80.5	29.35	ND	ND	0.08	No Change
BRGMP16D	7/5/2013 15:55	0.0	1.0	16.9	82.1	29.50	ND	ND	0	No Change
BRGMP16S	11/21/2012 14:00	0.0	7.9	9.3	82.8	29.62	ND	ND	0	No Change
BRGMP16S	11/29/2012 11:46	0.0	6.7	9.7	83.6	29.59	ND	ND	-0.03	No Change
BRGMP16S	12/6/2012 16:22	0.0	6.4	9.9	83.7	29.36	ND	ND	0.02	No Change
BRGMP16S	12/12/2012 15:51	0.0	1.9	19.7	78.4	29.63	ND	ND	0.01	No Change
BRGMP16S	12/18/2012 11:45	0.0	5.8	9.3	84.9	29.15	ND	ND	-1.32	No Change
BRGMP16S	12/28/2012 15:43	0.0	7.3	10.5	82.2	29.35	ND	ND	-1.35	No Change
BRGMP16S	1/4/2013 9:48	0.0	7.4	10.1	82.5	29.83	ND	ND	0	No Change
BRGMP16S	1/10/2013 14:18	0.0	6.9	9.9	83.2	29.45	ND	ND	-2.13	No Change
BRGMP16S	1/18/2013 10:10	0.0	6.8	10.0	83.2	29.83	ND	ND	-0.6	No Change
BRGMP16S	1/25/2013 11:26	0.0	6.6	9.8	83.6	29.59	ND	ND	0.04	No Change
BRGMP16S	2/1/2013 10:27	0.0	6.5	11.4	82.1	29.75	ND	ND	0.12	No Change
BRGMP16S	2/6/2013 13:50	0.0	3.2	12.3	84.5	29.55	ND	ND	0.06	No Change
BRGMP16S	2/15/2013 14:03	0.0	6.0	11.8	82.2	29.47	ND	ND	0.11	No Change
BRGMP16S	2/22/2013 11:46	0.0	6.5	10.6	82.9	29.18	ND	ND	0.05	No Change

TABLE 1 - GAS MONITORING PROBE DATA **Bridgeton Landfill, LLC**
11/21/2012 through 07/05/2013

POINT IDENTIFICATION	SAMPLE DATE - TIME	METHANE [CH_4] (%)	CARBON DIOXIDE [CO_2] (%)	OXYGEN [O_2] (%)	BALANCE [N_2] (%)	BAROMETROC PRESSURE (in. Hg)	CARBON MONOXIDE [CO] (ppm)	HYDROGEN SULFIDE [H_2S] (ppm)	RELATIVE PRESSURE (in. H2O)	COMMENT
BRGMP16S	2/28/2013 16:01	0.0	5.1	12.2	82.7	29.24	ND	ND	-0.01	No Change
BRGMP16S	3/8/2013 10:49	0.0	3.9	11.4	84.7	29.74	ND	ND	0.17	No Change
BRGMP16S	3/14/2013 10:04	0.0	7.3	11.2	81.5	29.55	ND	ND	0.13	No Change
BRGMP16S	3/21/2013 13:39	0.0	7.6	11.3	81.1	29.44	ND	ND	0.04	No Change
BRGMP16S	3/28/2013 14:22	0.0	2.9	18.9	78.2	29.79	ND	ND	3.33	No Change
BRGMP16S	4/4/2013 15:55	0.0	7.5	11.0	81.5	29.55	ND	ND	0.06	No Change
BRGMP16S	4/11/2013 12:00	0.0	8.0	10.9	81.1	29.09	ND	ND	0	No Change
BRGMP16S	5/3/2013 15:00	0.0	4.2	10.0	85.8	29.26	ND	ND	0.43	No Change
BRGMP16S	5/10/2013 11:57	0.0	5.8	10.1	84.1	29.43	0	203	-0.01	No Change
BRGMP16S	5/17/2013 10:59	0.0	6.5	9.8	83.7	29.47	0	204	0	No Change
BRGMP16S	5/24/2013 16:14	0.0	8.6	7.4	84.0	29.80	0	32767	0.18	No Change
BRGMP16S	5/31/2013 11:03	0.0	4.5	9.4	86.1	29.36	0	210	0	No Change
BRGMP16S	6/7/2013 15:36	0.0	7.2	7.7	85.1	29.29	ND	ND	-0.01	No Change
BRGMP16S	6/14/2013 15:44	0.0	6.7	9.5	83.8	29.49	ND	ND	0.04	No Change
BRGMP16S	6/21/2013 15:47	0.0	6.7	8.5	84.8	29.43	ND	ND	-0.13	No Change
BRGMP16S	6/27/2013 14:32	0.0	5.9	8.9	85.2	29.34	ND	ND	0	No Change
BRGMP16S	7/5/2013 15:53	0.0	5.2	6.8	88.0	29.49	ND	ND	-0.02	No Change
BRIGMP01	11/21/2012 10:56	52.2	29.8	3.1	14.9	29.72	ND	ND	0.05	No Change
BRIGMP01	11/29/2012 9:49	52.0	31.2	2.7	14.1	29.68	ND	ND	0	No Change
BRIGMP01	12/6/2012 14:02	53.4	32.7	2.1	11.8	29.40	ND	ND	0	No Change
BRIGMP01	12/12/2012 14:01	51.3	31.3	2.8	14.6	29.68	ND	ND	0.05	No Change
BRIGMP01	12/18/2012 9:34	52.5	32.2	2.3	13.0	29.21	ND	ND	0.01	No Change
BRIGMP01	12/28/2012 13:46	58.3	32.4	1.2	8.1	29.38	ND	ND	0.04	No Change
BRIGMP01	1/4/2013 10:19	60.3	37.6	0.5	1.6	29.87	ND	ND	0.02	No Change
BRIGMP01	1/10/2013 12:48	46.9	30.1	4.5	18.5	29.52	ND	ND	-2.25	No Change
BRIGMP01	1/18/2013 8:29	52.0	31.3	2.9	13.8	29.89	ND	ND	0.03	No Change
BRIGMP01	1/25/2013 9:32	50.2	29.1	4.1	16.6	29.62	ND	ND	0	No Change
BRIGMP01	2/1/2013 9:02	48.8	29.6	4.1	17.5	29.86	ND	ND	-3.06	No Change
BRIGMP01	2/6/2013 12:46	46.9	29.3	4.2	19.6	29.66	ND	ND	-0.02	No Change

TABLE 1 - GAS MONITORING PROBE DATA **Bridgeton Landfill, LLC**
11/21/2012 through 07/05/2013

POINT IDENTIFICATION	SAMPLE DATE - TIME	METHANE [CH_4] (%)	CARBON DIOXIDE [CO_2] (%)	OXYGEN [O_2] (%)	BALANCE [N_2] (%)	BAROMETROC PRESSURE (in. Hg)	CARBON MONOXIDE [CO] (ppm)	HYDROGEN SULFIDE [H_2S] (ppm)	RELATIVE PRESSURE (in. H2O)	COMMENT
BRIGMP01	2/15/2013 12:47	47.2	28.3	4.9	19.6	29.46	ND	ND	0.21	No Change
BRIGMP01	2/22/2013 9:49	46.7	28.6	4.3	20.4	29.27	ND	ND	-2.54	No Change
BRIGMP01	2/28/2013 14:24	60.2	34.6	1.1	4.1	29.34	ND	ND	0.76	No Change
BRIGMP01	3/8/2013 12:29	62.0	36.4	0.0	1.6	29.75	ND	ND	0.59	No Change
BRIGMP01	3/14/2013 10:41	62.6	37.3	0.0	0.1	29.54	ND	ND	1.32	No Change
BRIGMP01	3/21/2013 10:36	64.4	34.5	0.0	1.1	29.49	ND	ND	0.97	No Change
BRIGMP01	3/28/2013 10:51	64.7	33.9	0.1	1.3	29.89	ND	ND	1.29	No Change
BRIGMP01	4/4/2013 14:25	62.9	34.3	0.6	2.2	29.63	ND	ND	0.11	No Change
BRIGMP01	4/11/2013 9:00	61.4	36.6	0.1	1.9	29.11	ND	ND	0	No Change
BRIGMP01	5/3/2013 11:14	52.1	30.8	3.1	14.0	29.35	ND	ND	0.08	No Change
BRIGMP01	5/10/2013 9:36	47.6	30.8	3.7	17.9	29.44	0	210	0.01	No Change
BRIGMP01	5/17/2013 8:39	35.9	25.0	7.5	31.6	29.50	0	213	0	No Change
BRIGMP01	5/24/2013 14:10	62.4	37.5	0.0	0.1	29.92	0	32767	3.33	No Change
BRIGMP01	5/31/2013 9:28	49.4	31.7	3.0	15.9	29.40	0	215	0	No Change
BRIGMP01	6/7/2013 13:38	63.9	35.9	0.0	0.2	29.34	ND	ND	8.04	No Change
BRIGMP01	6/14/2013 13:56	61.6	37.7	0.0	0.7	29.51	ND	ND	7.17	No Change
BRIGMP01	6/21/2013 14:16	63.6	36.1	0.0	0.3	29.50	ND	ND	2.45	No Change
BRIGMP01	6/27/2013 9:38	60.4	36.4	0.0	3.2	29.33	ND	ND	8.33	No Change
BRIGMP01	7/5/2013 13:50	54.9	35.9	0.0	9.2	29.48	ND	ND	5.32	No Change
BRIGMP02	11/21/2012 14:20	45.9	21.8	5.3	27.0	29.62	ND	ND	0.08	No Change
BRIGMP02	11/29/2012 10:55	59.8	24.7	2.5	13.0	29.64	ND	ND	-10.9	No Change
BRIGMP02	12/6/2012 15:24	66.8	31.2	0.1	1.9	29.38	ND	ND	0.94	No Change
BRIGMP02	12/12/2012 14:45	0.0	2.4	19.6	78.0	29.65	ND	ND	-0.85	No Change
BRIGMP02	12/18/2012 10:23	62.6	32.5	0.0	4.9	29.19	ND	ND	2.61	No Change
BRIGMP02	12/28/2012 14:47	66.9	30.2	0.0	2.9	29.35	ND	ND	0.58	No Change
BRIGMP02	1/4/2013 8:44	32.1	20.4	6.9	40.6	29.83	ND	ND	-0.08	No Change
BRIGMP02	1/10/2013 13:29	57.6	31.3	0.2	10.9	29.48	ND	ND	-9.43	No Change
BRIGMP02	1/18/2013 9:17	50.3	29.8	0.3	19.6	29.86	ND	ND	-0.45	No Change
BRIGMP02	1/25/2013 10:14	55.4	28.4	1.2	15.0	29.61	ND	ND	-0.48	No Change

TABLE 1 - GAS MONITORING PROBE DATA **Bridgeton Landfill, LLC**
11/21/2012 through 07/05/2013

POINT IDENTIFICATION	SAMPLE DATE - TIME	METHANE [CH_4] (%)	CARBON DIOXIDE [CO_2] (%)	OXYGEN [O_2] (%)	BALANCE [N_2] (%)	BAROMETROC PRESSURE (in. Hg)	CARBON MONOXIDE [CO] (ppm)	HYDROGEN SULFIDE [H_2S] (ppm)	RELATIVE PRESSURE (in. H2O)	COMMENT
BRIGMP02	2/1/2013 9:43	59.9	13.3	7.3	19.5	29.79	ND	ND	-0.38	No Change
BRIGMP02	2/6/2013 13:28	69.2	26.3	0.2	4.3	29.57	ND	ND	2.47	No Change
BRIGMP02	2/15/2013 13:23	79.5	19.9	0.2	0.4	29.49	ND	ND	1.36	No Change
BRIGMP02	2/22/2013 10:36	75.3	17.9	0.4	6.4	29.20	ND	ND	0.08	No Change
BRIGMP02	2/28/2013 15:13	76.7	20.1	0.5	2.7	29.28	ND	ND	1.16	No Change
BRIGMP02	3/8/2013 12:58	74.5	20.0	0.3	5.2	29.72	ND	ND	3.3	No Change
BRIGMP02	3/14/2013 11:22	72.7	24.4	0.0	2.9	29.48	ND	ND	12	No Change
BRIGMP02	3/21/2013 11:32	74.5	24.2	0.0	1.3	29.48	ND	ND	6.92	No Change
BRIGMP02	3/28/2013 11:47	70.8	27.8	0.1	1.3	29.86	ND	ND	13.63	No Change
BRIGMP02	4/4/2013 15:11	69.0	29.0	0.2	1.8	29.60	ND	ND	22.73	No Change
BRIGMP02	4/11/2013 10:35	65.2	34.2	0.0	0.6	29.08	ND	ND	28.31	No Change
BRIGMP02	5/3/2013 11:49	59.8	38.3	0.0	1.9	29.31	ND	ND	50.98	No Change
BRIGMP02	5/10/2013 10:35	56.7	39.0	0.0	4.3	29.42	0	208	16.78	No Change
BRIGMP02	5/17/2013 9:31	71.1	27.9	0.0	1.0	29.48	0	213	18.07	No Change
BRIGMP02	5/24/2013 14:57	73.7	26.0	0.1	0.2	29.84	0	32767	36.8	No Change
BRIGMP02	5/31/2013 10:13	74.2	22.8	0.4	2.6	29.38	0	211	29.62	No Change
BRIGMP02	6/7/2013 14:40	62.2	33.5	0.0	4.3	29.31	ND	ND	16.27	No Change
BRIGMP02	6/14/2013 14:43	69.8	28.8	0.0	1.4	29.50	ND	ND	19.26	No Change
BRIGMP02	6/21/2013 15:08	68.2	27.7	0.0	4.1	29.47	ND	ND	48.41	No Change
BRIGMP02	6/27/2013 10:29	67.1	28.1	0.0	4.8	29.34	ND	ND	41.65	No Change
BRIGMP02	7/5/2013 13:45	58.7	35.3	0.0	6.0	29.47	ND	ND	6.16	No Change
BRIGMP03	11/21/2012 11:25	0.0	4.5	10.7	84.8	29.68	ND	ND	0	No Change
BRIGMP03	11/29/2012 10:41	0.0	2.4	12.9	84.7	29.63	ND	ND	-12.67	No Change
BRIGMP03	12/6/2012 15:29	0.0	4.4	12.1	83.5	29.36	ND	ND	0	No Change
BRIGMP03	12/12/2012 14:39	0.0	1.6	10.6	87.8	29.64	ND	ND	-0.01	No Change
BRIGMP03	12/18/2012 10:15	0.0	6.2	8.7	85.1	29.17	ND	ND	0.01	No Change
BRIGMP03	12/28/2012 14:37	0.0	3.3	12.8	83.9	29.35	ND	ND	0.01	No Change
BRIGMP03	1/4/2013 8:38	0.0	1.3	21.3	77.4	29.81	ND	ND	0	No Change
BRIGMP03	1/10/2013 13:24	0.0	5.1	10.8	84.1	29.46	ND	ND	0	No Change

TABLE 1 - GAS MONITORING PROBE DATA **Bridgeton Landfill, LLC**
11/21/2012 through 07/05/2013

POINT IDENTIFICATION	SAMPLE DATE - TIME	METHANE [CH_4] (%)	CARBON DIOXIDE [CO_2] (%)	OXYGEN [O_2] (%)	BALANCE [N_2] (%)	BAROMETROC PRESSURE (in. Hg)	CARBON MONOXIDE [CO] (ppm)	HYDROGEN SULFIDE [H_2S] (ppm)	RELATIVE PRESSURE (in. H2O)	COMMENT
BRIGMP03	1/18/2013 9:12	0.0	7.1	12.5	80.4	29.84	ND	ND	0.4	No Change
BRIGMP03	1/25/2013 10:09	0.0	4.1	13.6	82.3	29.60	ND	ND	0	No Change
BRIGMP03	2/1/2013 9:37	0.0	2.0	16.4	81.6	29.79	ND	ND	0.17	No Change
BRIGMP03	2/6/2013 13:24	0.0	2.5	15.6	81.9	29.57	ND	ND	-0.02	No Change
BRIGMP03	2/15/2013 13:17	0.0	2.2	15.9	81.9	29.48	ND	ND	0.1	No Change
BRIGMP03	2/22/2013 10:43	0.0	5.4	14.8	79.8	29.16	ND	ND	0.03	No Change
BRIGMP03	2/28/2013 15:18	0.0	5.4	13.8	80.8	29.26	ND	ND	0.02	No Change
BRIGMP03	3/8/2013 12:51	0.0	2.5	15.8	81.7	29.71	ND	ND	0	No Change
BRIGMP03	3/14/2013 11:17	0.0	3.8	16.4	79.8	29.48	ND	ND	0	No Change
BRIGMP03	3/21/2013 11:38	0.0	4.4	15.0	80.6	29.46	ND	ND	0	No Change
BRIGMP03	3/28/2013 13:30	0.0	3.9	15.6	80.5	29.82	ND	ND	0	No Change
BRIGMP03	4/4/2013 15:16	0.0	5.4	12.9	81.7	29.57	ND	ND	0	No Change
BRIGMP03	4/11/2013 10:42	0.0	6.5	12.1	81.4	29.06	ND	ND	0	No Change
BRIGMP03	5/3/2013 12:01	0.0	3.3	6.9	89.8	29.28	ND	ND	0.07	No Change
BRIGMP03	5/10/2013 10:29	0.0	4.8	5.5	89.7	29.41	0	205	0	No Change
BRIGMP03	5/17/2013 9:35	0.0	1.5	11.8	86.7	29.46	0	201	0	No Change
BRIGMP03	5/24/2013 15:06	0.0	4.0	8.9	87.1	29.80	0	32767	0	No Change
BRIGMP03	5/31/2013 10:10	0.0	0.8	11.8	87.4	29.36	0	205	-0.11	No Change
BRIGMP03	6/7/2013 14:33	0.0	2.4	11.7	85.9	29.30	ND	ND	0	No Change
BRIGMP03	6/14/2013 14:35	0.7	4.0	7.7	87.6	29.48	ND	ND	0	No Change
BRIGMP03	6/21/2013 14:54	0.9	4.7	7.3	87.1	29.46	ND	ND	-0.17	No Change
BRIGMP03	6/27/2013 13:31	0.0	0.8	18.5	80.7	29.33	ND	ND	0	No Change
BRIGMP03	7/5/2013 14:46	2.2	4.4	6.7	86.7	29.48	ND	ND	0.01	No Change
BRIGMP08	11/21/2012 14:13	0.0	5.5	15.0	79.5	29.60	ND	ND	0	No Change
BRIGMP08	11/29/2012 11:00	0.0	7.3	14.4	78.3	29.60	ND	ND	0.02	No Change
BRIGMP08	12/6/2012 16:40	0.0	5.0	15.4	79.6	29.34	ND	ND	0	No Change
BRIGMP08	12/12/2012 15:59	0.0	1.2	19.9	78.9	29.63	ND	ND	0.01	No Change
BRIGMP08	12/18/2012 10:45	0.0	7.9	14.5	77.6	29.17	ND	ND	0.05	No Change
BRIGMP08	12/28/2012 15:38	0.0	6.5	14.0	79.5	29.33	ND	ND	0.08	No Change

TABLE 1 - GAS MONITORING PROBE DATA **Bridgeton Landfill, LLC**
11/21/2012 through 07/05/2013

POINT IDENTIFICATION	SAMPLE DATE - TIME	METHANE [CH_4] (%)	CARBON DIOXIDE [CO_2] (%)	OXYGEN [O_2] (%)	BALANCE [N_2] (%)	BAROMETROC PRESSURE (in. Hg)	CARBON MONOXIDE [CO] (ppm)	HYDROGEN SULFIDE [H_2S] (ppm)	RELATIVE PRESSURE (in. H2O)	COMMENT
BRIGMP08	1/4/2013 10:03	0.0	4.7	16.3	79.0	29.82	ND	ND	-0.03	No Change
BRIGMP08	1/10/2013 14:12	0.0	4.9	15.6	79.5	29.44	ND	ND	0.01	No Change
BRIGMP08	1/18/2013 10:06	0.0	4.6	16.0	79.4	29.81	ND	ND	0.14	No Change
BRIGMP08	1/25/2013 11:23	0.0	4.6	14.3	81.1	29.58	ND	ND	0.05	No Change
BRIGMP08	2/1/2013 10:23	0.0	4.6	17.5	77.9	29.73	ND	ND	0.1	No Change
BRIGMP08	2/6/2013 13:38	0.0	7.9	13.7	78.4	29.53	ND	ND	0.05	No Change
BRIGMP08	2/15/2013 14:00	0.0	5.2	15.1	79.7	29.45	ND	ND	0.13	No Change
BRIGMP08	2/22/2013 11:25	0.0	5.5	13.8	80.7	29.14	ND	ND	0.12	No Change
BRIGMP08	2/28/2013 16:13	0.0	4.4	15.6	80.0	29.23	ND	ND	0	No Change
BRIGMP08	3/8/2013 10:40	0.0	3.0	13.9	83.1	29.73	ND	ND	0.03	No Change
BRIGMP08	3/14/2013 9:34	0.0	6.8	13.4	79.8	29.55	ND	ND	0.07	No Change
BRIGMP08	3/21/2013 13:52	0.0	7.6	13.1	79.3	29.43	ND	ND	0	No Change
BRIGMP08	3/28/2013 14:35	0.0	7.1	13.5	79.4	29.76	ND	ND	0	No Change
BRIGMP08	4/4/2013 16:06	0.0	7.2	13.1	79.7	29.55	ND	ND	0	No Change
BRIGMP08	4/11/2013 12:10	0.0	7.1	13.8	79.1	29.08	ND	ND	0	No Change
BRIGMP08	5/3/2013 14:32	0.0	2.9	14.7	82.4	29.25	ND	ND	0	No Change
BRIGMP08	5/10/2013 11:36	0.0	7.1	12.4	80.5	29.42	0	203	0	No Change
BRIGMP08	5/17/2013 10:38	0.0	5.1	14.6	80.3	29.46	0	203	0	No Change
BRIGMP08	5/24/2013 15:56	0.0	2.7	17.5	79.8	29.79	0	32767	0	No Change
BRIGMP08	5/31/2013 10:47	0.0	3.9	14.8	81.3	29.35	0	207	0	No Change
BRIGMP08	6/7/2013 15:26	0.0	7.0	13.3	79.7	29.28	ND	ND	-0.02	No Change
BRIGMP08	6/14/2013 15:14	0.0	3.1	15.5	81.4	29.47	ND	ND	0	No Change
BRIGMP08	6/21/2013 15:35	0.0	4.1	16.4	79.5	29.43	ND	ND	-0.16	No Change
BRIGMP08	6/27/2013 14:15	0.0	5.0	13.4	81.6	29.33	ND	ND	-0.01	No Change
BRIGMP08	7/5/2013 15:38	0.0	2.7	12.5	84.8	29.47	ND	ND	0	No Change
BRIGMP09	11/21/2012 11:08	0.0	0.7	20.6	78.7	29.72	ND	ND	0	No Change
BRIGMP09	11/29/2012 10:25	0.0	4.5	19.6	75.9	29.66	ND	ND	0.14	No Change
BRIGMP09	12/6/2012 14:55	0.0	1.9	20.2	77.9	29.40	ND	ND	0	No Change
BRIGMP09	12/12/2012 14:25	0.0	3.9	19.0	77.1	29.66	ND	ND	0.03	No Change

TABLE 1 - GAS MONITORING PROBE DATA **Bridgeton Landfill, LLC**
11/21/2012 through 07/05/2013

POINT IDENTIFICATION	SAMPLE DATE - TIME	METHANE [CH_4] (%)	CARBON DIOXIDE [CO_2] (%)	OXYGEN [O_2] (%)	BALANCE [N_2] (%)	BAROMETROC PRESSURE (in. Hg)	CARBON MONOXIDE [CO] (ppm)	HYDROGEN SULFIDE [H_2S] (ppm)	RELATIVE PRESSURE (in. H2O)	COMMENT
BRIGMP09	12/18/2012 10:00	0.0	4.8	19.5	75.7	29.20	ND	ND	0.29	No Change
BRIGMP09	12/28/2012 14:23	0.0	3.2	20.3	76.5	29.36	ND	ND	-2.72	No Change
BRIGMP09	1/4/2013 8:19	0.0	0.4	21.2	78.4	29.84	ND	ND	0	No Change
BRIGMP09	1/10/2013 13:11	0.0	5.7	17.1	77.2	29.51	ND	ND	3.15	No Change
BRIGMP09	1/18/2013 8:56	0.0	6.5	17.6	75.9	29.88	ND	ND	-53.55	No Change
BRIGMP09	1/25/2013 9:53	0.0	9.2	17.9	72.9	29.63	ND	ND	-1.83	No Change
BRIGMP09	2/1/2013 9:21	0.0	6.1	20.8	73.1	29.85	ND	ND	-5.34	No Change
BRIGMP09	2/6/2013 13:09	0.0	2.7	20.2	77.1	29.65	ND	ND	-0.71	No Change
BRIGMP09	2/15/2013 13:04	0.0	4.3	19.5	76.2	29.51	ND	ND	-6.73	No Change
BRIGMP09	2/22/2013 10:12	0.0	5.3	20.6	74.1	29.26	ND	ND	-0.04	No Change
BRIGMP09	2/28/2013 14:49	0.0	1.1	21.5	77.4	29.33	ND	ND	1.9	No Change
BRIGMP09	3/8/2013 12:36	0.0	0.7	20.2	79.1	29.77	ND	ND	-22.2	No Change
BRIGMP09	3/14/2013 11:01	0.0	5.7	18.9	75.4	29.53	ND	ND	-28.93	No Change
BRIGMP09	3/21/2013 11:09	0.0	1.3	20.6	78.1	29.51	ND	ND	-18.39	No Change
BRIGMP09	3/28/2013 11:19	0.0	0.1	21.1	78.8	29.89	ND	ND	-14.24	No Change
BRIGMP09	4/4/2013 14:50	0.0	0.4	19.4	80.2	29.62	ND	ND	0.07	No Change
BRIGMP09	4/11/2013 9:35	0.0	0.2	21.2	78.6	29.09	ND	ND	0.33	No Change
BRIGMP09	5/3/2013 11:33	0.0	1.9	21.0	77.1	29.34	ND	ND	-0.89	No Change
BRIGMP09	5/10/2013 10:12	0.0	0.8	20.8	78.4	29.44	0	203	-0.09	No Change
BRIGMP09	5/17/2013 9:06	0.0	0.5	20.8	78.7	29.50	0	200	0	No Change
BRIGMP09	5/24/2013 14:38	0.0	0.2	20.3	79.5	29.88	0	32767	-0.02	No Change
BRIGMP09	5/31/2013 9:55	0.0	0.3	20.5	79.2	29.39	0	201	-18.58	No Change
BRIGMP09	6/7/2013 14:17	0.0	1.8	22.1	76.1	29.34	ND	ND	-17.78	No Change
BRIGMP09	6/14/2013 14:17	0.0	0.1	20.4	79.5	29.52	ND	ND	0	No Change
BRIGMP09	6/21/2013 14:37	0.0	3.0	20.3	76.7	29.50	ND	ND	2.84	No Change
BRIGMP09	6/27/2013 10:06	0.0	0.3	18.8	80.9	29.36	ND	ND	0	No Change
BRIGMP09	7/5/2013 14:20	0.0	0.2	19.0	80.8	29.52	ND	ND	0.08	No Change
BRIGMP4D	11/21/2012 13:28	0.0	0.8	19.6	79.6	29.63	ND	ND	0	No Change
BRIGMP4D	11/29/2012 11:12	0.0	2.8	19.1	78.1	29.60	ND	ND	-0.03	No Change

TABLE 1 - GAS MONITORING PROBE DATA **Bridgeton Landfill, LLC**
11/21/2012 through 07/05/2013

POINT IDENTIFICATION	SAMPLE DATE - TIME	METHANE [CH_4] (%)	CARBON DIOXIDE [CO_2] (%)	OXYGEN [O_2] (%)	BALANCE [N_2] (%)	BAROMETROC PRESSURE (in. Hg)	CARBON MONOXIDE [CO] (ppm)	HYDROGEN SULFIDE [H_2S] (ppm)	RELATIVE PRESSURE (in. H2O)	COMMENT
BRIGMP4D	12/6/2012 15:42	0.0	1.1	20.1	78.8	29.35	ND	ND	0	No Change
BRIGMP4D	12/12/2012 15:17	0.0	2.2	19.1	78.7	29.63	ND	ND	0.02	No Change
BRIGMP4D	12/18/2012 10:59	0.0	2.5	19.1	78.4	29.17	ND	ND	-0.48	No Change
BRIGMP4D	12/28/2012 15:09	0.0	1.6	20.4	78.0	29.34	ND	ND	-0.55	No Change
BRIGMP4D	1/4/2013 9:04	0.0	1.8	20.3	77.9	29.81	ND	ND	-0.01	No Change
BRIGMP4D	1/10/2013 13:46	0.0	1.2	20.5	78.3	29.44	ND	ND	-0.96	No Change
BRIGMP4D	1/18/2013 9:40	0.0	1.9	19.6	78.5	29.83	ND	ND	0.2	No Change
BRIGMP4D	1/25/2013 10:41	0.0	2.6	20.0	77.4	29.59	ND	ND	0.21	No Change
BRIGMP4D	2/1/2013 10:01	0.0	2.3	21.9	75.8	29.74	ND	ND	0.15	No Change
BRIGMP4D	2/6/2013 14:16	0.0	4.7	18.6	76.7	29.53	ND	ND	-0.01	No Change
BRIGMP4D	2/15/2013 13:34	0.0	2.1	20.7	77.2	29.47	ND	ND	0.12	No Change
BRIGMP4D	2/22/2013 10:52	0.0	2.5	21.4	76.1	29.17	ND	ND	-6.83	No Change
BRIGMP4D	2/28/2013 15:27	0.0	2.4	20.9	76.7	29.26	ND	ND	0	No Change
BRIGMP4D	3/8/2013 12:22	0.0	2.8	19.5	77.7	29.73	ND	ND	-0.1	No Change
BRIGMP4D	3/14/2013 10:34	0.0	1.2	21.1	77.7	29.51	ND	ND	0.17	No Change
BRIGMP4D	3/21/2013 11:48	0.0	0.8	20.3	78.9	29.46	ND	ND	0.13	No Change
BRIGMP4D	3/28/2013 13:43	0.0	1.0	20.6	78.4	29.81	ND	ND	0.1	No Change
BRIGMP4D	4/4/2013 15:28	0.0	1.0	20.4	78.6	29.55	ND	ND	0.05	No Change
BRIGMP4D	4/11/2013 10:51	0.0	1.0	20.5	78.5	29.06	ND	ND	0.18	No Change
BRIGMP4D	5/3/2013 14:07	0.0	1.5	20.5	78.0	29.27	ND	ND	0.05	No Change
BRIGMP4D	5/10/2013 11:09	0.0	1.1	20.8	78.1	29.43	0	202	0	No Change
BRIGMP4D	5/17/2013 9:44	0.0	0.9	20.6	78.5	29.45	0	200	0.11	No Change
BRIGMP4D	5/24/2013 15:28	0.0	0.7	20.6	78.7	29.80	0	32767	0.13	No Change
BRIGMP4D	5/31/2013 10:24	0.0	1.3	20.5	78.2	29.36	0	206	0.04	No Change
BRIGMP4D	6/7/2013 15:10	0.0	1.0	21.9	77.1	29.29	ND	ND	0.08	No Change
BRIGMP4D	6/14/2013 14:53	0.0	1.1	20.3	78.6	29.49	ND	ND	-0.06	No Change
BRIGMP4D	6/21/2013 15:19	0.0	1.4	21.4	77.2	29.45	ND	ND	-0.24	No Change
BRIGMP4D	6/27/2013 13:40	0.0	1.3	18.9	79.8	29.33	ND	ND	0.06	No Change
BRIGMP4D	7/5/2013 15:13	0.0	1.4	16.5	82.1	29.49	ND	ND	0	No Change

TABLE 1 - GAS MONITORING PROBE DATA **Bridgeton Landfill, LLC**
11/21/2012 through 07/05/2013

POINT IDENTIFICATION	SAMPLE DATE - TIME	METHANE [CH_4] (%)	CARBON DIOXIDE [CO_2] (%)	OXYGEN [O_2] (%)	BALANCE [N_2] (%)	BAROMETROC PRESSURE (in. Hg)	CARBON MONOXIDE [CO] (ppm)	HYDROGEN SULFIDE [H_2S] (ppm)	RELATIVE PRESSURE (in. H2O)	COMMENT
BRIGMP4S	11/21/2012 13:27	0.0	2.1	17.2	80.7	29.63	ND	ND	0	No Change
BRIGMP4S	11/29/2012 11:11	0.0	2.7	16.4	80.9	29.60	ND	ND	-0.02	No Change
BRIGMP4S	12/6/2012 15:40	0.0	2.6	16.4	81.0	29.35	ND	ND	0	No Change
BRIGMP4S	12/12/2012 15:16	0.0	1.7	15.0	83.3	29.63	ND	ND	0	No Change
BRIGMP4S	12/18/2012 10:58	0.0	2.8	14.7	82.5	29.17	ND	ND	-0.19	No Change
BRIGMP4S	12/28/2012 15:07	0.0	3.4	15.2	81.4	29.33	ND	ND	-0.13	No Change
BRIGMP4S	1/4/2013 9:02	0.0	3.3	15.8	80.9	29.82	ND	ND	0	No Change
BRIGMP4S	1/10/2013 13:44	0.0	2.9	14.9	82.2	29.44	ND	ND	-0.33	No Change
BRIGMP4S	1/18/2013 9:39	0.0	2.1	14.6	83.3	29.83	ND	ND	-0.27	No Change
BRIGMP4S	1/25/2013 10:39	0.0	3.2	15.0	81.8	29.59	ND	ND	0.08	No Change
BRIGMP4S	2/1/2013 10:00	0.0	2.3	17.3	80.4	29.75	ND	ND	0.1	No Change
BRIGMP4S	2/6/2013 14:15	0.0	9.6	14.4	76.0	29.53	ND	ND	-0.04	No Change
BRIGMP4S	2/15/2013 13:33	0.0	1.9	16.6	81.5	29.47	ND	ND	0.13	No Change
BRIGMP4S	2/22/2013 10:51	0.0	3.1	15.7	81.2	29.15	ND	ND	0.11	No Change
BRIGMP4S	2/28/2013 15:26	0.0	2.6	15.7	81.7	29.26	ND	ND	0.01	No Change
BRIGMP4S	3/8/2013 12:22	0.0	4.6	15.7	79.7	29.73	ND	ND	-0.03	No Change
BRIGMP4S	3/14/2013 10:33	0.9	2.9	18.2	78.0		ND	ND	0.13	No Change
BRIGMP4S	3/21/2013 11:47	0.5	2.3	18.5	78.7	29.46	ND	ND	0	No Change
BRIGMP4S	3/28/2013 13:42	0.7	2.8	18.9	77.6	29.81	ND	ND	0.18	No Change
BRIGMP4S	4/4/2013 15:26	0.4	2.9	18.9	77.8	29.56	ND	ND	0.01	No Change
BRIGMP4S	4/11/2013 10:50	0.2	2.8	19.0	78.0	29.06	ND	ND	0.04	No Change
BRIGMP4S	5/3/2013 14:06	0.0	1.0	19.6	79.4	29.27	ND	ND	0	No Change
BRIGMP4S	5/10/2013 11:08	0.3	1.7	19.9	78.1	29.43	0	202	0.01	No Change
BRIGMP4S	5/17/2013 9:43	0.7	1.7	19.3	78.3	29.45	0	201	0	No Change
BRIGMP4S	5/24/2013 15:26	1.7	2.4	18.7	77.2	29.80	0	32767	0.02	No Change
BRIGMP4S	5/31/2013 10:23	1.4	2.7	18.5	77.4	29.36	0	206	0	No Change
BRIGMP4S	6/7/2013 15:09	0.7	1.6	20.9	76.8	29.29	ND	ND	0.13	No Change
BRIGMP4S	6/14/2013 14:52	1.2	1.6	18.4	78.8	29.49	ND	ND	0	No Change
BRIGMP4S	6/21/2013 15:18	1.4	2.6	18.8	77.2	29.45	ND	ND	0.01	No Change

TABLE 1 - GAS MONITORING PROBE DATA **Bridgeton Landfill, LLC**
11/21/2012 through 07/05/2013

POINT IDENTIFICATION	SAMPLE DATE - TIME	METHANE [CH_4] (%)	CARBON DIOXIDE [CO_2] (%)	OXYGEN [O_2] (%)	BALANCE [N_2] (%)	BAROMETROC PRESSURE (in. Hg)	CARBON MONOXIDE [CO] (ppm)	HYDROGEN SULFIDE [H_2S] (ppm)	RELATIVE PRESSURE (in. H2O)	COMMENT
BRIGMP4S	6/27/2013 13:39	2.2	2.8	16.4	78.6	29.33	ND	ND	0	No Change
BRIGMP4S	7/5/2013 15:12	1.7	1.9	14.9	81.5	29.49	ND	ND	0	No Change
BRIGMP5D	11/21/2012 13:39	0.2	3.7	18.7	77.4	29.62	ND	ND	0.25	No Change
BRIGMP5D	11/29/2012 11:26	0.0	15.9	14.8	69.3	29.59	ND	ND	0.21	No Change
BRIGMP5D	12/6/2012 15:52	0.0	6.5	18.4	75.1	29.35	ND	ND	-0.05	No Change
BRIGMP5D	12/12/2012 15:27	0.0	2.7	19.0	78.3	29.64	ND	ND	0.04	No Change
BRIGMP5D	12/18/2012 11:12	0.0	13.5	15.1	71.4	29.14	ND	ND	-1.05	No Change
BRIGMP5D	12/28/2012 15:21	0.0	9.2	17.2	73.6	29.33	ND	ND	-0.01	No Change
BRIGMP5D	1/4/2013 9:17	0.0	6.6	18.6	74.8	29.81	ND	ND	0	No Change
BRIGMP5D	1/10/2013 13:56	0.0	13.3	15.8	70.9	29.44	ND	ND	-0.86	No Change
BRIGMP5D	1/18/2013 9:50	0.0	15.3	13.9	70.8	29.82	ND	ND	0.08	No Change
BRIGMP5D	1/25/2013 10:50	0.0	5.3	19.3	75.4	29.58	ND	ND	0.04	No Change
BRIGMP5D	2/1/2013 10:10	0.0	9.9	19.2	70.9	29.74	ND	ND	0.04	No Change
BRIGMP5D	2/6/2013 14:00	0.0	6.6	18.4	75.0	29.52	ND	ND	0.02	No Change
BRIGMP5D	2/15/2013 13:42	0.0	8.0	18.9	73.1	29.47	ND	ND	0.09	No Change
BRIGMP5D	2/22/2013 11:08	0.0	8.1	19.1	72.8	29.14	ND	ND	0.01	No Change
BRIGMP5D	2/28/2013 15:38	0.0	7.8	19.1	73.1	29.24	ND	ND	0	No Change
BRIGMP5D	3/8/2013 11:11	0.0	6.2	19.2	74.6	29.72	ND	ND	0.05	No Change
BRIGMP5D	3/14/2013 10:11	0.0	2.2	20.2	77.6	29.54	ND	ND	0.09	No Change
BRIGMP5D	3/21/2013 13:16	0.0	1.0	20.5	78.5	29.46	ND	ND	0.01	No Change
BRIGMP5D	3/28/2013 13:56	0.0	1.5	20.6	77.9	29.79	ND	ND	0.03	No Change
BRIGMP5D	4/4/2013 15:38	0.0	1.8	20.7	77.5	29.55	ND	ND	0	No Change
BRIGMP5D	4/11/2013 11:06	0.0	2.4	20.4	77.2	29.07	ND	ND	-0.01	No Change
BRIGMP5D	5/3/2013 14:19	0.0	3.9	20.5	75.6	29.26	ND	ND	0	No Change
BRIGMP5D	5/10/2013 11:22	0.0	3.3	20.6	76.1	29.41	0	202	0	No Change
BRIGMP5D	5/17/2013 9:55	0.0	3.1	20.3	76.6	29.44	0	200	0	No Change
BRIGMP5D	5/24/2013 15:41	0.1	2.4	20.3	77.2	29.79	0	32767	0.03	No Change
BRIGMP5D	5/31/2013 10:35	0.0	2.5	20.5	77.0	29.35	0	205	0	No Change
BRIGMP5D	6/7/2013 15:18	0.0	2.1	21.8	76.1	29.29	ND	ND	-0.03	No Change

TABLE 1 - GAS MONITORING PROBE DATA **Bridgeton Landfill, LLC**
11/21/2012 through 07/05/2013

POINT IDENTIFICATION	SAMPLE DATE - TIME	METHANE [CH_4] (%)	CARBON DIOXIDE [CO_2] (%)	OXYGEN [O_2] (%)	BALANCE [N_2] (%)	BAROMETROC PRESSURE (in. Hg)	CARBON MONOXIDE [CO] (ppm)	HYDROGEN SULFIDE [H_2S] (ppm)	RELATIVE PRESSURE (in. H2O)	COMMENT
BRIGMP5D	6/14/2013 15:02	0.0	2.5	19.9	77.6	29.48	ND	ND	0.01	No Change
BRIGMP5D	6/21/2013 15:26	0.0	2.6	21.3	76.1	29.44	ND	ND	-0.19	No Change
BRIGMP5D	6/27/2013 13:51	0.0	2.6	18.6	78.8	29.33	ND	ND	0	No Change
BRIGMP5D	7/5/2013 15:25	0.0	1.7	16.4	81.9	29.49	ND	ND	0.06	No Change
BRIGMP5S	11/21/2012 13:37	7.8	33.1	8.5	50.6	29.63	ND	ND	-0.01	No Change
BRIGMP5S	11/29/2012 11:25	2.5	39.7	7.0	50.8	29.59	ND	ND	-0.06	No Change
BRIGMP5S	12/6/2012 15:51	9.9	38.0	7.8	44.3	29.35	ND	ND	0	No Change
BRIGMP5S	12/12/2012 15:26	1.3	5.7	18.2	74.8	29.62	ND	ND	0.06	No Change
BRIGMP5S	12/18/2012 11:10	14.0	44.6	5.9	35.5	29.15	ND	ND	0.22	No Change
BRIGMP5S	12/28/2012 15:19	18.7	51.0	3.0	27.3	29.33	ND	ND	0	No Change
BRIGMP5S	1/4/2013 9:15	20.4	56.1	3.0	20.5	29.81	ND	ND	0	No Change
BRIGMP5S	1/10/2013 13:55	14.5	60.0	3.1	22.4	29.45	ND	ND	-0.43	No Change
BRIGMP5S	1/18/2013 9:49	14.9	58.3	3.0	23.8	29.82	ND	ND	-0.71	No Change
BRIGMP5S	1/25/2013 10:49	14.8	45.0	6.9	33.3	29.59	ND	ND	0.03	No Change
BRIGMP5S	2/1/2013 10:08	21.1	56.0	3.3	19.6	29.75	ND	ND	0.09	No Change
BRIGMP5S	2/6/2013 13:59	17.4	46.3	5.9	30.4	29.52	ND	ND	0.06	No Change
BRIGMP5S	2/15/2013 13:41	13.3	33.7	10.1	42.9	29.47	ND	ND	0.12	No Change
BRIGMP5S	2/22/2013 11:07	14.1	34.2	10.3	41.4	29.14	ND	ND	0.1	No Change
BRIGMP5S	2/28/2013 15:36	20.0	51.1	4.3	24.6	29.24	ND	ND	0.01	No Change
BRIGMP5S	3/8/2013 11:10	16.1	40.5	7.1	36.3	29.72	ND	ND	0.03	No Change
BRIGMP5S	3/14/2013 10:10	12.4	33.8	10.0	43.8	29.54	ND	ND	0.15	No Change
BRIGMP5S	3/21/2013 13:14	4.7	13.5	16.3	65.5	29.46	ND	ND	0	No Change
BRIGMP5S	3/28/2013 13:54	7.3	21.8	14.3	56.6	29.79	ND	ND	0.03	No Change
BRIGMP5S	4/4/2013 15:36	4.4	15.7	16.3	63.6	29.55	ND	ND	0	No Change
BRIGMP5S	4/11/2013 11:05	1.9	8.4	18.7	71.0	29.07	ND	ND	0.01	No Change
BRIGMP5S	5/3/2013 14:18	0.8	7.1	19.6	72.5	29.26	ND	ND	0	No Change
BRIGMP5S	5/10/2013 11:21	0.5	5.5	20.0	74.0	29.43	0	203	0.02	No Change
BRIGMP5S	5/17/2013 9:53	0.4	4.5	20.0	75.1	29.44	0	203	0	No Change
BRIGMP5S	5/24/2013 15:38	0.4	3.2	20.2	76.2	29.79	0	32767	0	No Change

TABLE 1 - GAS MONITORING PROBE DATA **Bridgeton Landfill, LLC**
11/21/2012 through 07/05/2013

POINT IDENTIFICATION	SAMPLE DATE - TIME	METHANE [CH_4] (%)	CARBON DIOXIDE [CO_2] (%)	OXYGEN [O_2] (%)	BALANCE [N_2] (%)	BAROMETROC PRESSURE (in. Hg)	CARBON MONOXIDE [CO] (ppm)	HYDROGEN SULFIDE [H_2S] (ppm)	RELATIVE PRESSURE (in. H2O)	COMMENT
BRIGMP5S	5/31/2013 10:33	0.2	3.0	20.4	76.4	29.36	0	207	0	No Change
BRIGMP5S	6/7/2013 15:17	0.0	3.0	21.5	75.5	29.29	ND	ND	-0.06	No Change
BRIGMP5S	6/14/2013 15:01	0.1	2.2	20.0	77.7	29.49	ND	ND	0	No Change
BRIGMP5S	6/21/2013 15:25	0.0	3.5	20.8	75.7	29.44	ND	ND	-0.17	No Change
BRIGMP5S	6/27/2013 13:50	0.0	2.4	18.7	78.9	29.33	ND	ND	0	No Change
BRIGMP5S	7/5/2013 15:24	0.0	1.2	16.6	82.2	29.49	ND	ND	0	No Change
BRIGMP6D	11/21/2012 13:47	0.0	0.7	19.3	80.0	29.63	ND	ND	0	No Change
BRIGMP6D	11/29/2012 11:39	0.0	3.3	17.5	79.2	29.59	ND	ND	0.03	No Change
BRIGMP6D	12/6/2012 16:00	0.0	1.9	19.7	78.4	29.36	ND	ND	-0.01	No Change
BRIGMP6D	12/12/2012 15:32	0.0	1.7	19.1	79.2	29.63	ND	ND	0.03	No Change
BRIGMP6D	12/18/2012 11:24	0.0	1.4	19.7	78.9	29.16	ND	ND	-0.23	No Change
BRIGMP6D	12/28/2012 15:27	0.0	1.9	20.2	77.9	29.35	ND	ND	0.06	No Change
BRIGMP6D	1/4/2013 9:23	0.0	2.2	19.9	77.9	29.83	ND	ND	0	No Change
BRIGMP6D	1/10/2013 14:00	0.0	2.7	19.8	77.5	29.45	ND	ND	0.11	No Change
BRIGMP6D	1/18/2013 9:54	0.0	3.5	19.2	77.3	29.84	ND	ND	0.11	No Change
BRIGMP6D	1/25/2013 10:54	0.0	1.9	20.2	77.9	29.59	ND	ND	0.13	No Change
BRIGMP6D	2/1/2013 10:13	0.0	3.8	19.0	77.2	29.75	ND	ND	0.09	No Change
BRIGMP6D	2/6/2013 14:03	0.0	1.6	20.1	78.3	29.54	ND	ND	0.03	No Change
BRIGMP6D	2/15/2013 13:46	0.0	1.9	21.1	77.0	29.48	ND	ND	0.12	No Change
BRIGMP6D	2/22/2013 11:12	0.0	2.2	20.8	77.0	29.15	ND	ND	0.11	No Change
BRIGMP6D	2/28/2013 15:42	0.0	1.7	21.0	77.3	29.25	ND	ND	0.01	No Change
BRIGMP6D	3/8/2013 11:08	0.0	2.1	20.3	77.6	29.73	ND	ND	0.09	No Change
BRIGMP6D	3/14/2013 10:16	0.0	1.6	20.6	77.8	29.54	ND	ND	0.21	No Change
BRIGMP6D	3/21/2013 13:21	0.0	1.3	20.3	78.4	29.47	ND	ND	0.07	No Change
BRIGMP6D	3/28/2013 14:02	0.0	1.8	20.1	78.1	29.80	ND	ND	0.07	No Change
BRIGMP6D	4/4/2013 15:42	0.0	1.6	20.3	78.1	29.56	ND	ND	0	No Change
BRIGMP6D	4/11/2013 11:16	0.0	1.2	20.5	78.3	29.08	ND	ND	0	No Change
BRIGMP6D	5/3/2013 14:26	0.0	0.8	21.1	78.1	29.27	ND	ND	0	No Change
BRIGMP6D	5/10/2013 11:28	0.0	0.7	21.0	78.3	29.43	0	202	-0.04	No Change

TABLE 1 - GAS MONITORING PROBE DATA **Bridgeton Landfill, LLC**
11/21/2012 through 07/05/2013

POINT IDENTIFICATION	SAMPLE DATE - TIME	METHANE [CH_4] (%)	CARBON DIOXIDE [CO_2] (%)	OXYGEN [O_2] (%)	BALANCE [N_2] (%)	BAROMETROC PRESSURE (in. Hg)	CARBON MONOXIDE [CO] (ppm)	HYDROGEN SULFIDE [H_2S] (ppm)	RELATIVE PRESSURE (in. H2O)	COMMENT
BRIGMP6D	5/17/2013 10:03	0.0	0.4	20.9	78.7	29.46	0	199	0	No Change
BRIGMP6D	5/24/2013 15:49	0.0	0.4	20.9	78.7	29.80	0	32767	0.06	No Change
BRIGMP6D	5/31/2013 10:41	0.0	0.5	21.0	78.5	29.36	0	205	0	No Change
BRIGMP6D	6/7/2013 15:21	0.0	0.6	22.3	77.1	29.30	ND	ND	0	No Change
BRIGMP6D	6/14/2013 15:07	0.0	0.4	20.5	79.1	29.49	ND	ND	0	No Change
BRIGMP6D	6/21/2013 15:29	0.0	0.8	21.6	77.6	29.45	ND	ND	-0.15	No Change
BRIGMP6D	6/27/2013 14:04	0.0	0.5	19.2	80.3	29.33	ND	ND	0.04	No Change
BRIGMP6D	7/5/2013 15:31	0.0	0.9	16.5	82.6	29.49	ND	ND	0.06	No Change
BRIGMP6S	11/21/2012 13:45	0.0	0.5	17.8	81.7	29.63	ND	ND	0	No Change
BRIGMP6S	11/29/2012 11:37	0.0	1.6	18.8	79.6	29.59	ND	ND	-0.07	No Change
BRIGMP6S	12/6/2012 15:58	0.0	2.9	15.8	81.3	29.36	ND	ND	-0.01	No Change
BRIGMP6S	12/12/2012 15:31	0.0	2.0	15.9	82.1	29.64	ND	ND	0.01	No Change
BRIGMP6S	12/18/2012 11:22	0.0	2.4	15.8	81.8	29.16	ND	ND	-0.1	No Change
BRIGMP6S	12/28/2012 15:25	0.0	5.3	15.8	78.9	29.34	ND	ND	-0.06	No Change
BRIGMP6S	1/4/2013 9:22	0.0	4.0	16.7	79.3	29.82	ND	ND	0	No Change
BRIGMP6S	1/10/2013 13:59	0.0	4.9	16.6	78.5	29.45	ND	ND	0.09	No Change
BRIGMP6S	1/18/2013 9:53	0.0	6.2	15.5	78.3	29.84	ND	ND	-1.08	No Change
BRIGMP6S	1/25/2013 10:53	0.0	2.9	17.1	80.0	29.59	ND	ND	0.08	No Change
BRIGMP6S	2/1/2013 10:12	0.0	4.4	18.4	77.2	29.75	ND	ND	0.11	No Change
BRIGMP6S	2/6/2013 14:02	0.0	2.7	16.7	80.6	29.54	ND	ND	0	No Change
BRIGMP6S	2/15/2013 13:45	0.0	2.6	18.0	79.4	29.48	ND	ND	0.21	No Change
BRIGMP6S	2/22/2013 11:11	0.0	2.5	18.2	79.3	29.16	ND	ND	0.1	No Change
BRIGMP6S	2/28/2013 15:41	0.1	2.2	18.5	79.2	29.25	ND	ND	0	No Change
BRIGMP6S	3/8/2013 11:07	0.0	3.4	14.5	82.1	29.74	ND	ND	0.11	No Change
BRIGMP6S	3/14/2013 10:15	0.0	1.4	17.8	80.8	29.54	ND	ND	0.1	No Change
BRIGMP6S	3/21/2013 13:20	0.0	0.9	17.9	81.2	29.47	ND	ND	0.02	No Change
BRIGMP6S	3/28/2013 14:00	0.2	1.7	14.7	83.4	29.80	ND	ND	0	No Change
BRIGMP6S	4/4/2013 15:41	0.2	1.5	15.9	82.4	29.55	ND	ND	0	No Change
BRIGMP6S	4/11/2013 11:14	0.1	0.6	19.0	80.3	29.07	ND	ND	0.01	No Change

TABLE 1 - GAS MONITORING PROBE DATA **Bridgeton Landfill, LLC**
11/21/2012 through 07/05/2013

POINT IDENTIFICATION	SAMPLE DATE - TIME	METHANE [CH_4] (%)	CARBON DIOXIDE [CO_2] (%)	OXYGEN [O_2] (%)	BALANCE [N_2] (%)	BAROMETROC PRESSURE (in. Hg)	CARBON MONOXIDE [CO] (ppm)	HYDROGEN SULFIDE [H_2S] (ppm)	RELATIVE PRESSURE (in. H2O)	COMMENT
BRIGMP6S	5/3/2013 14:25	0.0	1.0	19.4	79.6	29.27	ND	ND	0	No Change
BRIGMP6S	5/10/2013 11:27	0.1	0.8	18.4	80.7	29.41	0	202	0.01	No Change
BRIGMP6S	5/17/2013 10:02	0.0	0.5	19.4	80.1	29.45	0	200	0	No Change
BRIGMP6S	5/24/2013 15:47	0.0	0.5	18.3	81.2	29.79	0	32767	0	No Change
BRIGMP6S	5/31/2013 10:40	0.0	0.6	19.0	80.4	29.35	0	206	0	No Change
BRIGMP6S	6/7/2013 15:20	0.0	1.3	18.5	80.2	29.30	ND	ND	-0.03	No Change
BRIGMP6S	6/14/2013 15:06	0.0	0.6	20.5	78.9	29.48	ND	ND	0.03	No Change
BRIGMP6S	6/21/2013 15:29	0.0	1.4	17.1	81.5	29.45	ND	ND	-0.18	No Change
BRIGMP6S	6/27/2013 14:03	0.0	1.6	18.9	79.5	29.33	ND	ND	0	No Change
BRIGMP6S	7/5/2013 15:30	0.0	1.8	13.0	85.2	29.49	ND	ND	0.04	No Change
BRIGMP7D	11/21/2012 14:09	0.0	0.8	19.5	79.7	29.61	ND	ND	0	No Change
BRIGMP7D	11/29/2012 11:53	0.0	1.6	19.7	78.7	29.57	ND	ND	2.11	No Change
BRIGMP7D	12/6/2012 16:32	0.0	2.5	19.5	78.0	29.35	ND	ND	0	No Change
BRIGMP7D	12/12/2012 15:57	0.0	3.1	19.1	77.8	29.63	ND	ND	0.01	No Change
BRIGMP7D	12/18/2012 11:52	0.0	2.9	19.1	78.0	29.14	ND	ND	0.02	No Change
BRIGMP7D	12/28/2012 15:50	0.0	1.8	20.0	78.2	29.34	ND	ND	0.06	No Change
BRIGMP7D	1/4/2013 9:56	0.0	0.8	20.8	78.4	29.83	ND	ND	0	No Change
BRIGMP7D	1/10/2013 14:25	0.0	0.7	20.3	79.0	29.45	ND	ND	-0.13	No Change
BRIGMP7D	1/18/2013 10:17	0.0	2.8	19.2	78.0	29.82	ND	ND	0.11	No Change
BRIGMP7D	1/25/2013 11:34	0.0	3.4	17.2	79.4	29.58	ND	ND	0.06	No Change
BRIGMP7D	2/1/2013 10:33	0.0	3.3	20.9	75.8	29.73	ND	ND	0.1	No Change
BRIGMP7D	2/6/2013 13:43	0.0	3.1	20.1	76.8	29.54	ND	ND	0.02	No Change
BRIGMP7D	2/15/2013 14:08	0.0	4.0	11.3	84.7	29.47	ND	ND	0.05	No Change
BRIGMP7D	2/22/2013 11:34	0.0	3.3	17.9	78.8	29.16	ND	ND	0.1	No Change
BRIGMP7D	2/28/2013 16:08	0.0	2.3	20.8	76.9	29.23	ND	ND	0.01	No Change
BRIGMP7D	3/8/2013 10:45	0.0	0.6	20.7	78.7	29.74	ND	ND	0.1	No Change
BRIGMP7D	3/14/2013 9:40	0.0	0.6	21.1	78.3	29.57	ND	ND	0.05	No Change
BRIGMP7D	3/21/2013 13:47	0.0	0.4	21.4	78.2	29.43	ND	ND	0.04	No Change
BRIGMP7D	3/28/2013 14:30	0.0	0.8	20.7	78.5	29.78	ND	ND	0.01	No Change

TABLE 1 - GAS MONITORING PROBE DATA **Bridgeton Landfill, LLC**
11/21/2012 through 07/05/2013

POINT IDENTIFICATION	SAMPLE DATE - TIME	METHANE [CH_4] (%)	CARBON DIOXIDE [CO_2] (%)	OXYGEN [O_2] (%)	BALANCE [N_2] (%)	BAROMETROC PRESSURE (in. Hg)	CARBON MONOXIDE [CO] (ppm)	HYDROGEN SULFIDE [H_2S] (ppm)	RELATIVE PRESSURE (in. H2O)	COMMENT
BRIGMP7D	4/4/2013 16:02	0.0	0.9	20.5	78.6	29.55	ND	ND	0	No Change
BRIGMP7D	4/11/2013 12:06	0.0	0.8	20.4	78.8	29.09	ND	ND	0	No Change
BRIGMP7D	5/3/2013 14:56	0.0	2.5	19.9	77.6	29.26	ND	ND	0	No Change
BRIGMP7D	5/10/2013 12:03	0.0	1.1	20.6	78.3	29.43	0	204	0	No Change
BRIGMP7D	5/17/2013 11:12	0.0	1.2	20.4	78.4	29.46	0	202	0	No Change
BRIGMP7D	5/24/2013 16:24	0.0	1.2	20.3	78.5	29.80	0	32767	0	No Change
BRIGMP7D	5/31/2013 11:15	0.0	1.5	20.5	78.0	29.36	0	208	0	No Change
BRIGMP7D	6/7/2013 15:42	0.0	1.0	21.8	77.2	29.29	ND	ND	-0.03	No Change
BRIGMP7D	6/14/2013 15:55	0.0	1.2	20.1	78.7	29.47	ND	ND	0.02	No Change
BRIGMP7D	6/21/2013 15:53	0.0	0.9	21.8	77.3	29.42	ND	ND	-0.21	No Change
BRIGMP7D	6/27/2013 14:47	0.0	1.4	18.6	80.0	29.34	ND	ND	0	No Change
BRIGMP7D	7/5/2013 16:14	0.0	1.2	17.3	81.5	29.48	ND	ND	0	No Change
BRIGMP7S	11/21/2012 14:07	0.0	0.5	20.0	79.5	29.61	ND	ND	0.01	No Change
BRIGMP7S	11/29/2012 11:52	0.0	4.1	18.5	77.4	29.57	ND	ND	-0.07	No Change
BRIGMP7S	12/6/2012 16:30	0.0	4.0	15.5	80.5	29.35	ND	ND	0	No Change
BRIGMP7S	12/12/2012 15:56	0.0	1.8	9.8	88.4	29.63	ND	ND	0.02	No Change
BRIGMP7S	12/18/2012 11:50	0.0	6.3	6.8	86.9	29.13	ND	ND	-0.01	No Change
BRIGMP7S	12/28/2012 15:49	0.0	3.7	19.0	77.3	29.34	ND	ND	-0.6	No Change
BRIGMP7S	1/4/2013 9:54	0.0	3.7	19.3	77.0	29.83	ND	ND	0	No Change
BRIGMP7S	1/10/2013 14:24	0.0	1.9	19.1	79.0	29.45	ND	ND	-0.81	No Change
BRIGMP7S	1/18/2013 10:16	0.0	4.1	13.2	82.7	29.82	ND	ND	0.15	No Change
BRIGMP7S	1/25/2013 11:33	0.0	3.1	10.5	86.4	29.58	ND	ND	0.05	No Change
BRIGMP7S	2/1/2013 10:32	0.0	4.4	9.2	86.4	29.74	ND	ND	0.29	No Change
BRIGMP7S	2/6/2013 13:42	0.0	6.9	8.5	84.6	29.54	ND	ND	0.43	No Change
BRIGMP7S	2/15/2013 14:07	0.0	4.0	8.2	87.8	29.47	ND	ND	0.03	No Change
BRIGMP7S	2/22/2013 11:33	0.0	5.7	7.7	86.6	29.15	ND	ND	0.05	No Change
BRIGMP7S	2/28/2013 16:07	0.0	3.4	6.9	89.7	29.23	ND	ND	0.19	No Change
BRIGMP7S	3/8/2013 10:43	0.0	5.0	5.9	89.1	29.74	ND	ND	0.03	No Change
BRIGMP7S	3/14/2013 9:38	0.0	3.8	6.7	89.5	29.57	ND	ND	-0.18	No Change

TABLE 1 - GAS MONITORING PROBE DATA
11/21/2012 through 07/05/2013

Bridgeton Landfill, LLC

POINT IDENTIFICATION	SAMPLE DATE - TIME	METHANE [CH_4] (%)	CARBON DIOXIDE [CO_2] (%)	OXYGEN [O_2] (%)	BALANCE [N_2] (%)	BAROMETROC PRESSURE (in. Hg)	CARBON MONOXIDE [CO] (ppm)	HYDROGEN SULFIDE [H_2S] (ppm)	RELATIVE PRESSURE (in. H2O)	COMMENT
BRIGMP7S	3/21/2013 13:46	0.0	3.8	4.7	91.5	29.44	ND	ND	0.41	No Change
BRIGMP7S	3/28/2013 14:29	0.0	3.9	4.4	91.7	29.77	ND	ND	5.47	No Change
BRIGMP7S	4/4/2013 16:00	0.0	3.8	4.3	91.9	29.55	ND	ND	1.16	No Change
BRIGMP7S	4/11/2013 12:05	0.0	4.0	5.4	90.6	29.10	ND	ND	9.2	No Change
BRIGMP7S	5/3/2013 14:55	0.0	3.2	8.2	88.6	29.25	ND	ND	7.54	No Change
BRIGMP7S	5/10/2013 12:02	0.0	1.6	12.5	85.9	29.43	0	204	-3.78	No Change
BRIGMP7S	5/17/2013 11:10	0.0	2.8	6.7	90.5	29.46	0	206	-0.01	No Change
BRIGMP7S	5/24/2013 16:23	0.0	2.0	9.8	88.2	29.79	0	32767	-1.01	No Change
BRIGMP7S	5/31/2013 11:14	0.0	2.5	3.8	93.7	29.35	0	211	7.27	No Change
BRIGMP7S	6/7/2013 15:42	0.0	1.2	14.0	84.8	29.29	ND	ND	-0.76	No Change
BRIGMP7S	6/14/2013 15:53	0.0	1.9	4.6	93.5	29.48	ND	ND	0.04	No Change
BRIGMP7S	6/21/2013 15:52	0.0	1.0	16.4	82.6	29.42	ND	ND	-0.77	No Change
BRIGMP7S	6/27/2013 14:45	0.0	4.0	2.4	93.6	29.34	ND	ND	4.64	No Change
BRIGMP7S	7/5/2013 16:12	0.0	1.2	11.1	87.7	29.49	ND	ND	-2.93	No Change

TABLE 2 - SENTRY GAS MONITORING PROBE DATA **Bridgeton Landfill, LLC**

09/13/2012 through 01/18/2013

POINT IDENTIFICATION	SAMPLE DATE - TIME	METHANE [CH_4] (%)	CARBON DIOXIDE [CO_2] (%)	OXYGEN [O_2] (%)	BALANCE [N_2] (%)	BAROMETROC PRESSURE (in. Hg)	CARBON MONOXIDE [CO] (ppm)	HYDROGEN SULFIDE [H_2S] (ppm)	RELATIVE PRESSURE (in. H2O)	COMMENT
BRIGMP04	9/13/2012 15:26	21.1	77.0	0.0	1.9	29.57	ND	ND	88.90	No Change
BRIGMP04	12/18/2012 12:13	19.3	71.4	0.0	9.3	29.12	ND	ND	0.00	No Change
BRIGMP04	1/18/2013 10:37	19.9	71.5	0.0	8.6	29.81	ND	ND	97.68	No Change
BRIGMP05	9/13/2012 15:20	5.3	21.2	11.9	61.6	29.57	ND	ND	0.11	No Change
BRIGMP05	12/18/2012 12:07	64.5	15.4	0.0	20.1	29.12	ND	ND	1.06	No Change
BRIGMP05	1/18/2013 10:32	58.2	16.5	0.0	25.3	29.80	ND	ND	1.53	No Change
BRIGMP06	9/13/2012 15:07	11.9	72.9	2.2	13.0	29.58	ND	ND	0.08	No Change
BRIGMP06	12/18/2012 12:00	19.7	73.9	0.0	6.4	29.13	ND	ND	0.23	No Change
BRIGMP06	1/18/2013 10:25	10.4	82.2	0.0	7.4	29.82	ND	ND	0.18	No Change
BRIGMP07	9/13/2012 15:14	0.5	8.2	13.5	77.8	29.56	ND	ND	0.00	No Change
BRIGMP07	12/18/2012 11:56	0.0	19.3	8.8	71.9	29.13	ND	ND	0.04	No Change
BRIGMP07	1/18/2013 10:21	0.0	8.9	15.7	75.4	29.82	ND	ND	0.20	No Change

TABLE 3 - TEMPORARY GAS MONITORING PROBE DATA **Bridgeton Landfill, LLC**
11/21/2012 through 07/05/2013

POINT IDENTIFICATION	SAMPLE DATE - TIME	METHANE [CH_4] (%)	CARBON DIOXIDE [CO_2] (%)	OXYGEN [O_2] (%)	BALANCE [N_2] (%)	BAROMETROC PRESSURE (in. Hg)	CARBON MONOXIDE [CO] (ppm)	HYDROGEN SULFIDE [H_2S] (ppm)	RELATIVE PRESSURE (in. H2O)	COMMENT
BRITMP1D	11/21/2012 11:04	0.1	0.9	20.5	78.5	29.72	ND	ND	0.01	No Change
BRITMP1D	11/29/2012 9:58	0.0	1.2	20.4	78.4	29.68	ND	ND	-28.52	No Change
BRITMP1D	12/6/2012 14:14	0.0	1.0	20.4	78.6	29.39	ND	ND	0.00	No Change
BRITMP1D	12/12/2012 14:07	0.0	1.2	19.6	79.2	29.68	ND	ND	0.30	No Change
BRITMP1D	12/18/2012 9:39	0.0	2.0	20.1	77.9	29.21	ND	ND	0.92	No Change
BRITMP1D	12/28/2012 13:53	0.0	1.3	19.9	78.8	29.38	ND	ND	0.14	No Change
BRITMP1D	1/4/2013 8:16	0.4	0.8	20.8	78.0	29.84	ND	ND	-0.10	No Change
BRITMP1D	1/10/2013 12:54	0.5	1.2	20.0	78.3	29.54	ND	ND	-32.90	No Change
BRITMP1D	1/18/2013 8:35	0.0	1.3	20.5	78.2	29.89	ND	ND	-0.52	No Change
BRITMP1D	1/25/2013 9:38	0.0	1.3	20.4	78.3	29.62	ND	ND	-0.86	No Change
BRITMP1D	2/1/2013 9:07	0.0	1.2	21.7	77.1	29.87	ND	ND	0.87	No Change
BRITMP1D	2/6/2013 12:54	0.5	2.0	20.3	77.2	29.66	ND	ND	0.24	No Change
BRITMP1D	2/15/2013 12:52	0.0	0.6	20.5	78.9	29.48	ND	ND	1.42	No Change
BRITMP1D	2/22/2013 9:54	0.0	0.3	21.3	78.4	29.29	ND	ND	0.97	No Change
BRITMP1D	2/28/2013 14:46	0.0	0.3	22.1	77.6	29.32	ND	ND	1.47	No Change
BRITMP1D	3/8/2013 12:34	0.0	0.3	21.1	78.6	29.76	ND	ND	0.85	No Change
BRITMP1D	3/14/2013 10:45	0.0	0.5	21.4	78.1	29.54	ND	ND	0.36	No Change
BRITMP1D	3/21/2013 10:43	0.0	0.2	21.4	78.4	29.49	ND	ND	0.76	No Change
BRITMP1D	3/28/2013 10:57	0.0	0.2	20.5	79.3	29.89	ND	ND	1.51	No Change
BRITMP1D	4/4/2013 14:31	0.0	0.2	20.9	78.9	29.62	ND	ND	0.28	No Change
BRITMP1D	4/11/2013 9:07	0.0	0.2	21.2	78.6	29.10	ND	ND	1.23	No Change
BRITMP1D	5/3/2013 11:18	0.4	2.1	20.4	77.1	29.35	ND	ND	1.14	No Change
BRITMP1D	5/10/2013 9:44	0.2	0.5	21.0	78.3	29.44	0	202	1.84	No Change
BRITMP1D	5/17/2013 8:48	0.2	0.5	20.9	78.4	29.49	0	200	0.34	No Change
BRITMP1D	5/24/2013 14:17	0.2	0.4	20.5	78.9	29.90	0	32,767	1.86	No Change
BRITMP1D	5/31/2013 9:52	0.0	0.3	20.7	79.0	29.39	0	201	1.79	No Change
BRITMP1D	6/7/2013 13:44	0.0	0.2	22.3	77.5	29.34	ND	ND	0.81	No Change
BRITMP1D	6/14/2013 14:14	0.3	0.5	20.2	79.0	29.51	ND	ND	1.67	No Change
BRITMP1D	6/21/2013 14:21	0.1	0.5	22.2	77.2	29.50	ND	ND	1.63	No Change

TABLE 3 - TEMPORARY GAS MONITORING PROBE DATA **Bridgeton Landfill, LLC**
11/21/2012 through 07/05/2013

POINT IDENTIFICATION	SAMPLE DATE - TIME	METHANE [CH_4] (%)	CARBON DIOXIDE [CO_2] (%)	OXYGEN [O_2] (%)	BALANCE [N_2] (%)	BAROMETROC PRESSURE (in. Hg)	CARBON MONOXIDE [CO] (ppm)	HYDROGEN SULFIDE [H_2S] (ppm)	RELATIVE PRESSURE (in. H2O)	COMMENT
BRITMP1D	6/27/2013 10:01	0.2	0.4	19.1	80.3	29.34	ND	ND	1.70	No Change
BRITMP1D	7/5/2013 14:17	0.0	0.3	19.0	80.7	29.51	ND	ND	0.21	No Change
BRITMP1M	11/21/2012 11:01	0.3	2.0	20.2	77.5	29.72	ND	ND	0.01	No Change
BRITMP1M	11/29/2012 9:59	0.0	1.5	20.3	78.2	29.68	ND	ND	-126.69	No Change
BRITMP1M	12/6/2012 14:12	0.2	1.8	20.1	77.9	29.39	ND	ND	0.58	No Change
BRITMP1M	12/12/2012 14:05	0.4	3.5	18.8	77.3	29.67	ND	ND	0.68	No Change
BRITMP1M	12/18/2012 9:38	0.4	3.8	19.5	76.3	29.21	ND	ND	0.03	No Change
BRITMP1M	12/28/2012 13:51	0.4	3.8	18.9	76.9	29.38	ND	ND	-0.15	No Change
BRITMP1M	1/4/2013 8:13	0.6	2.2	20.5	76.7	29.84	ND	ND	-0.12	No Change
BRITMP1M	1/10/2013 12:53	0.7	3.1	19.3	76.9	29.54	ND	ND	-47.05	No Change
BRITMP1M	1/18/2013 8:33	0.6	2.8	19.9	76.7	29.89	ND	ND	-1.00	No Change
BRITMP1M	1/25/2013 9:36	0.6	4.2	19.4	75.8	29.62	ND	ND	-0.15	No Change
BRITMP1M	2/1/2013 9:06	0.3	2.6	21.0	76.1	29.86	ND	ND	-14.28	No Change
BRITMP1M	2/6/2013 12:53	0.6	3.3	19.7	76.4	29.65	ND	ND	-0.06	No Change
BRITMP1M	2/15/2013 12:50	0.0	1.4	20.2	78.4	29.48	ND	ND	0.13	No Change
BRITMP1M	2/22/2013 9:53	0.1	0.9	20.9	78.1	29.29	ND	ND	-0.03	No Change
BRITMP1M	2/28/2013 14:44	0.1	0.8	22.1	77.0	29.32	ND	ND	0.00	No Change
BRITMP1M	3/8/2013 12:33	0.0	0.9	21.0	78.1	29.75	ND	ND	-0.01	No Change
BRITMP1M	3/14/2013 10:44	0.0	1.9	20.2	77.9	29.54	ND	ND	0.09	No Change
BRITMP1M	3/21/2013 10:41	0.2	0.4	21.3	78.1	29.49	ND	ND	0.03	No Change
BRITMP1M	3/28/2013 10:56	0.0	0.2	20.5	79.3	29.88	ND	ND	0.09	No Change
BRITMP1M	4/4/2013 14:29	0.0	0.2	20.9	78.9	29.62	ND	ND	0.00	No Change
BRITMP1M	4/11/2013 9:04	0.2	0.4	21.0	78.4	29.10	ND	ND	0.04	No Change
BRITMP1M	5/3/2013 11:17	0.3	4.7	19.8	75.2	29.35	ND	ND	0.02	No Change
BRITMP1M	5/10/2013 9:42	0.0	0.6	21.0	78.4	29.44	0	202	0.00	No Change
BRITMP1M	5/17/2013 8:46	0.0	0.4	21.0	78.6	29.50	0	200	0.00	No Change
BRITMP1M	5/24/2013 14:16	0.0	0.4	20.6	79.0	29.91	0	32,767	0.00	No Change
BRITMP1M	5/31/2013 9:50	0.0	0.4	20.7	78.9	29.39	0	201	0.00	No Change
BRITMP1M	6/7/2013 13:43	0.1	0.7	22.1	77.1	29.34	ND	ND	0.00	No Change

TABLE 3 - TEMPORARY GAS MONITORING PROBE DATA **Bridgeton Landfill, LLC**
11/21/2012 through 07/05/2013

POINT IDENTIFICATION	SAMPLE DATE - TIME	METHANE [CH_4] (%)	CARBON DIOXIDE [CO_2] (%)	OXYGEN [O_2] (%)	BALANCE [N_2] (%)	BAROMETROC PRESSURE (in. Hg)	CARBON MONOXIDE [CO] (ppm)	HYDROGEN SULFIDE [H_2S] (ppm)	RELATIVE PRESSURE (in. H2O)	COMMENT
BRITMP1M	6/14/2013 14:13	0.0	0.7	20.3	79.0	29.51	ND	ND	0.00	No Change
BRITMP1M	6/21/2013 14:20	0.0	0.5	22.4	77.1	29.50	ND	ND	-0.07	No Change
BRITMP1M	6/27/2013 9:59	0.0	0.5	19.4	80.1	29.34	ND	ND	0.00	No Change
BRITMP1M	7/5/2013 14:14	0.0	0.7	18.9	80.4	29.51	ND	ND	0.00	No Change
BRITMP1S	11/21/2012 10:58	39.7	18.6	2.0	39.7	29.72	ND	ND	0.06	No Change
BRITMP1S	11/29/2012 9:53	43.3	19.0	1.6	36.1	29.68	ND	ND	-0.16	No Change
BRITMP1S	12/6/2012 14:09	48.7	18.2	2.0	31.1	29.39	ND	ND	0.11	No Change
BRITMP1S	12/12/2012 14:03	50.6	20.6	1.4	27.4	29.68	ND	ND	0.13	No Change
BRITMP1S	12/18/2012 9:36	52.0	25.6	0.5	21.9	29.21	ND	ND	-14.45	No Change
BRITMP1S	12/28/2012 13:49	62.3	20.5	0.2	17.0	29.38	ND	ND	-4.80	No Change
BRITMP1S	1/4/2013 8:10	63.3	20.1	1.0	15.6	29.84	ND	ND	0.00	No Change
BRITMP1S	1/10/2013 12:51	64.3	22.5	0.6	12.6	29.54	ND	ND	-0.02	No Change
BRITMP1S	1/18/2013 8:31	65.5	22.4	0.3	11.8	29.89	ND	ND	-4.64	No Change
BRITMP1S	1/25/2013 9:34	68.1	23.0	0.5	8.4	29.63	ND	ND	0.00	No Change
BRITMP1S	2/1/2013 9:05	49.0	12.9	6.7	31.4	29.87	ND	ND	-5.82	No Change
BRITMP1S	2/6/2013 12:52	49.5	14.2	5.5	30.8	29.66	ND	ND	0.27	No Change
BRITMP1S	2/15/2013 12:49	49.5	14.8	4.7	31.0	29.47	ND	ND	0.33	No Change
BRITMP1S	2/22/2013 9:51	34.4	11.0	8.8	45.8	29.29	ND	ND	-0.12	No Change
BRITMP1S	2/28/2013 14:42	52.2	17.9	2.8	27.1	29.33	ND	ND	0.00	No Change
BRITMP1S	3/8/2013 12:31	54.5	19.8	0.4	25.3	29.75	ND	ND	0.00	No Change
BRITMP1S	3/14/2013 10:43	53.5	20.5	0.0	26.0	29.54	ND	ND	0.11	No Change
BRITMP1S	3/21/2013 10:40	52.9	18.4	1.7	27.0	29.49	ND	ND	0.01	No Change
BRITMP1S	3/28/2013 10:54	58.2	20.6	0.0	21.2	29.89	ND	ND	0.25	No Change
BRITMP1S	4/4/2013 14:26	61.7	26.6	0.2	11.5	29.63	ND	ND	0.28	No Change
BRITMP1S	4/11/2013 9:02	56.6	32.5	0.0	10.9	29.10	ND	ND	0.59	No Change
BRITMP1S	5/3/2013 11:16	56.4	40.3	0.0	3.3	29.36	ND	ND	2.81	No Change
BRITMP1S	5/10/2013 9:39	51.0	45.4	0.0	3.6	29.44	0	207	0.23	No Change
BRITMP1S	5/17/2013 8:42	50.3	41.1	0.2	8.4	29.50	0	208	0.06	No Change
BRITMP1S	5/24/2013 14:13	50.4	42.6	0.0	7.0	29.91	0	32,767	0.16	No Change

TABLE 3 - TEMPORARY GAS MONITORING PROBE DATA **Bridgeton Landfill, LLC**
11/21/2012 through 07/05/2013

POINT IDENTIFICATION	SAMPLE DATE - TIME	METHANE [CH_4] (%)	CARBON DIOXIDE [CO_2] (%)	OXYGEN [O_2] (%)	BALANCE [N_2] (%)	BAROMETROC PRESSURE (in. Hg)	CARBON MONOXIDE [CO] (ppm)	HYDROGEN SULFIDE [H_2S] (ppm)	RELATIVE PRESSURE (in. H2O)	COMMENT
BRITMP1S	5/31/2013 9:46	49.3	40.1	0.1	10.5	29.39	0	213	0.19	No Change
BRITMP1S	6/7/2013 13:41	49.2	41.2	0.3	9.3	29.34	ND	ND	0.00	No Change
BRITMP1S	6/14/2013 14:12	48.3	37.6	0.1	14.0	29.51	ND	ND	0.05	No Change
BRITMP1S	6/21/2013 14:18	50.6	38.1	0.0	11.3	29.50	ND	ND	0.05	No Change
BRITMP1S	6/27/2013 9:56	47.8	43.2	0.0	9.0	29.34	ND	ND	0.37	No Change
BRITMP1S	7/5/2013 14:11	47.0	41.3	0.2	11.5	29.51	ND	ND	0.13	No Change
BRITMP2D	11/21/2012 10:46	69.1	29.7	0.0	1.2	29.73	ND	ND	51.22	No Change
BRITMP2D	11/29/2012 10:16	63.7	30.8	0.0	5.5	29.67	ND	ND	87.73	No Change
BRITMP2D	12/6/2012 14:30	67.1	30.5	0.0	2.4	29.38	ND	ND	46.43	No Change
BRITMP2D	12/12/2012 14:19	62.2	33.5	0.0	4.3	29.66	ND	ND	13.29	No Change
BRITMP2D	12/18/2012 9:56	61.6	33.5	0.0	4.9	29.20	ND	ND	-1.12	No Change
BRITMP2D	12/28/2012 14:18	66.1	32.1	0.0	1.8	29.36	ND	ND	22.43	No Change
BRITMP2D	1/4/2013 7:56	63.9	32.1	0.6	3.4	29.84	ND	ND	1.29	No Change
BRITMP2D	1/10/2013 13:06	62.3	35.7	0.0	2.0	29.51	ND	ND	31.45	No Change
BRITMP2D	1/18/2013 8:51	46.9	40.2	0.0	12.9	29.87	ND	ND	34.73	No Change
BRITMP2D	1/25/2013 9:50	58.5	36.7	0.0	4.8	29.62	ND	ND	75.00	No Change
BRITMP2D	2/1/2013 9:17	16.1	14.3	15.5	54.1	29.85	ND	ND	0.03	No Change
BRITMP2D	2/6/2013 13:04	17.8	13.1	14.5	54.6	29.65	ND	ND	0.07	No Change
BRITMP2D	2/15/2013 13:01	11.1	10.6	16.3	62.0	29.50	ND	ND	0.16	No Change
BRITMP2D	2/22/2013 10:07	18.9	17.6	13.6	49.9	29.26	ND	ND	0.15	No Change
BRITMP2D	2/28/2013 14:39	13.1	10.5	16.9	59.5	29.33	ND	ND	0.15	No Change
BRITMP2D	3/8/2013 13:03	33.4	25.6	7.7	33.3	29.73	ND	ND	-0.18	No Change
BRITMP2D	3/14/2013 10:58	12.8	11.2	16.0	60.0	29.53	ND	ND	0.29	No Change
BRITMP2D	3/21/2013 11:04	8.6	5.7	18.0	67.7	29.50	ND	ND	0.15	No Change
BRITMP2D	3/28/2013 11:12	17.0	11.2	14.7	57.1	29.88	ND	ND	0.61	No Change
BRITMP2D	4/4/2013 14:45	20.9	14.3	12.7	52.1	29.61	ND	ND	0.21	No Change
BRITMP2D	4/11/2013 9:28	17.2	12.3	14.9	55.6	29.10	ND	ND	0.22	No Change
BRITMP2D	5/3/2013 11:28	3.1	4.8	19.6	72.5	29.33	ND	ND	0.63	No Change
BRITMP2D	5/10/2013 10:06	1.1	2.7	20.2	76.0	29.43	0	203	0.29	No Change

TABLE 3 - TEMPORARY GAS MONITORING PROBE DATA **Bridgeton Landfill, LLC**
11/21/2012 through 07/05/2013

POINT IDENTIFICATION	SAMPLE DATE - TIME	METHANE [CH_4] (%)	CARBON DIOXIDE [CO_2] (%)	OXYGEN [O_2] (%)	BALANCE [N_2] (%)	BAROMETROC PRESSURE (in. Hg)	CARBON MONOXIDE [CO] (ppm)	HYDROGEN SULFIDE [H_2S] (ppm)	RELATIVE PRESSURE (in. H2O)	COMMENT
BRITMP2D	5/17/2013 9:02	7.1	5.3	18.3	69.3	29.49	0	201	0.25	No Change
BRITMP2D	5/24/2013 14:33	4.1	3.3	19.0	73.6	29.88	0	32,767	0.57	No Change
BRITMP2D	5/31/2013 9:43	9.5	8.8	16.8	64.9	29.39	0	203	0.36	No Change
BRITMP2D	6/7/2013 14:13	6.4	5.6	19.5	68.5	29.33	ND	ND	0.24	No Change
BRITMP2D	6/14/2013 14:07	26.7	22.7	9.5	41.1	29.51	ND	ND	0.76	No Change
BRITMP2D	6/21/2013 14:34	17.3	13.7	14.0	55.0	29.49	ND	ND	0.48	No Change
BRITMP2D	6/27/2013 9:51	20.4	16.8	11.6	51.2	29.33	ND	ND	0.24	No Change
BRITMP2D	7/5/2013 14:05	12.6	10.4	14.3	62.7	29.50	ND	ND	0.08	No Change
BRITMP2M	11/21/2012 10:43	14.4	12.2	7.3	66.1	29.73	ND	ND	-0.08	No Change
BRITMP2M	11/29/2012 10:13	16.7	19.9	3.2	60.2	29.67	ND	ND	-0.18	No Change
BRITMP2M	12/6/2012 14:28	10.1	16.4	5.7	67.8	29.38	ND	ND	-0.10	No Change
BRITMP2M	12/12/2012 14:18	5.4	9.0	10.2	75.4	29.67	ND	ND	-0.12	No Change
BRITMP2M	12/18/2012 9:55	19.2	17.3	6.7	56.8	29.20	ND	ND	0.44	No Change
BRITMP2M	12/28/2012 14:10	30.3	23.6	2.5	43.6	29.37	ND	ND	-0.25	No Change
BRITMP2M	1/4/2013 7:54	40.9	27.2	2.2	29.7	29.84	ND	ND	-0.12	No Change
BRITMP2M	1/10/2013 13:05	37.1	31.5	1.8	29.6	29.51	ND	ND	-0.25	No Change
BRITMP2M	1/18/2013 8:48	35.2	33.8	1.6	29.4	29.87	ND	ND	0.00	No Change
BRITMP2M	1/25/2013 9:48	29.3	31.3	1.7	37.7	29.62	ND	ND	-0.43	No Change
BRITMP2M	2/1/2013 9:16	1.9	2.2	21.4	74.5	29.85	ND	ND	0.03	No Change
BRITMP2M	2/6/2013 13:03	1.0	2.5	20.4	76.1	29.65	ND	ND	-0.01	No Change
BRITMP2M	2/15/2013 13:00	8.7	10.1	16.6	64.6	29.49	ND	ND	0.14	No Change
BRITMP2M	2/22/2013 10:05	2.6	5.8	20.3	71.3	29.26	ND	ND	0.02	No Change
BRITMP2M	2/28/2013 14:36	2.7	3.8	20.6	72.9	29.33	ND	ND	0.00	No Change
BRITMP2M	3/8/2013 13:03	16.2	10.5	14.7	58.6	29.72	ND	ND	0.01	No Change
BRITMP2M	3/14/2013 10:56	8.4	3.4	18.8	69.4	29.53	ND	ND	0.15	No Change
BRITMP2M	3/21/2013 11:02	14.2	2.1	17.3	66.4	29.50	ND	ND	0.03	No Change
BRITMP2M	3/28/2013 11:09	15.1	3.4	16.4	65.1	29.88	ND	ND	0.00	No Change
BRITMP2M	4/4/2013 14:43	19.3	11.7	13.4	55.6	29.61	ND	ND	0.00	No Change
BRITMP2M	4/11/2013 9:25	8.6	5.2	18.4	67.8	29.10	ND	ND	0.01	No Change

TABLE 3 - TEMPORARY GAS MONITORING PROBE DATA **Bridgeton Landfill, LLC**
11/21/2012 through 07/05/2013

POINT IDENTIFICATION	SAMPLE DATE - TIME	METHANE [CH_4] (%)	CARBON DIOXIDE [CO_2] (%)	OXYGEN [O_2] (%)	BALANCE [N_2] (%)	BAROMETROC PRESSURE (in. Hg)	CARBON MONOXIDE [CO] (ppm)	HYDROGEN SULFIDE [H_2S] (ppm)	RELATIVE PRESSURE (in. H2O)	COMMENT
BRITMP2M	5/3/2013 11:27	14.0	16.5	13.8	55.7	29.33	ND	ND	-0.08	No Change
BRITMP2M	5/10/2013 10:05	10.1	5.5	17.0	67.4	29.43	0	204	0.00	No Change
BRITMP2M	5/17/2013 9:00	9.3	5.0	17.8	67.9	29.49	0	202	0.07	No Change
BRITMP2M	5/24/2013 14:30	8.4	5.6	17.6	68.4	29.88	0	32,767	0.00	No Change
BRITMP2M	5/31/2013 9:40	4.8	4.1	18.9	72.2	29.38	0	202	0.61	No Change
BRITMP2M	6/7/2013 14:12	5.5	6.4	19.3	68.8	29.33	ND	ND	0.00	No Change
BRITMP2M	6/14/2013 14:05	11.0	10.8	15.7	62.5	29.50	ND	ND	0.81	No Change
BRITMP2M	6/21/2013 14:32	2.1	2.1	20.6	75.2	29.49	ND	ND	0.05	No Change
BRITMP2M	6/27/2013 9:49	7.5	8.6	16.3	67.6	29.33	ND	ND	0.11	No Change
BRITMP2M	7/5/2013 14:02	6.8	6.7	16.0	70.5	29.49	ND	ND	0.05	No Change
BRITMP2S	11/21/2012 10:41	0.0	0.3	20.1	79.6	29.73	ND	ND	-0.01	No Change
BRITMP2S	11/29/2012 10:11	0.0	2.8	20.3	76.9	29.67	ND	ND	-0.14	No Change
BRITMP2S	12/6/2012 14:26	0.0	1.5	20.3	78.2	29.38	ND	ND	-0.01	No Change
BRITMP2S	12/12/2012 14:16	0.0	0.9	19.6	79.5	29.67	ND	ND	-0.12	No Change
BRITMP2S	12/18/2012 9:53	0.0	1.5	18.1	80.4	29.20	ND	ND	0.19	No Change
BRITMP2S	12/28/2012 14:06	0.0	2.3	19.5	78.2	29.37	ND	ND	-0.29	No Change
BRITMP2S	1/4/2013 7:52	0.0	0.2	20.5	79.3	29.84	ND	ND	-0.03	No Change
BRITMP2S	1/10/2013 13:04	0.0	1.7	20.1	78.2	29.51	ND	ND	-1.02	No Change
BRITMP2S	1/18/2013 8:47	0.0	5.8	8.3	85.9	29.87	ND	ND	0.01	No Change
BRITMP2S	1/25/2013 9:47	0.0	3.4	18.3	78.3	29.62	ND	ND	-1.01	No Change
BRITMP2S	2/1/2013 9:15	0.0	3.2	22.2	74.6	29.86	ND	ND	0.02	No Change
BRITMP2S	2/6/2013 13:01	0.0	1.0	21.0	78.0	29.65	ND	ND	-0.20	No Change
BRITMP2S	2/15/2013 12:59	0.0	2.0	20.4	77.6	29.49	ND	ND	0.14	No Change
BRITMP2S	2/22/2013 10:03	0.5	5.2	20.4	73.9	29.27	ND	ND	-0.06	No Change
BRITMP2S	2/28/2013 14:33	0.0	1.9	18.2	79.9	29.33	ND	ND	0.02	No Change
BRITMP2S	3/8/2013 13:01	0.2	1.7	20.6	77.5	29.72	ND	ND	-0.05	No Change
BRITMP2S	3/14/2013 10:54	0.0	0.3	21.4	78.3	29.53	ND	ND	0.15	No Change
BRITMP2S	3/21/2013 11:00	43.6	2.5	0.2	53.7	29.49	ND	ND	0.07	No Change
BRITMP2S	3/28/2013 11:07	49.3	43.8	0.6	6.3	29.88	ND	ND	0.10	No Change

TABLE 3 - TEMPORARY GAS MONITORING PROBE DATA **Bridgeton Landfill, LLC**
11/21/2012 through 07/05/2013

POINT IDENTIFICATION	SAMPLE DATE - TIME	METHANE [CH_4] (%)	CARBON DIOXIDE [CO_2] (%)	OXYGEN [O_2] (%)	BALANCE [N_2] (%)	BAROMETROC PRESSURE (in. Hg)	CARBON MONOXIDE [CO] (ppm)	HYDROGEN SULFIDE [H_2S] (ppm)	RELATIVE PRESSURE (in. H2O)	COMMENT
BRITMP2S	4/4/2013 14:42	16.4	23.5	12.0	48.1	29.61	ND	ND	0.00	No Change
BRITMP2S	4/11/2013 9:22	38.1	61.8	0.0	0.1	29.10	ND	ND	0.29	No Change
BRITMP2S	5/3/2013 11:26	36.0	60.5	0.0	3.5	29.34	ND	ND	0.45	No Change
BRITMP2S	5/10/2013 10:01	29.3	41.2	4.5	25.0	29.43	0	207	0.00	No Change
BRITMP2S	5/17/2013 8:57	19.9	36.0	6.2	37.9	29.48	0	205	0.00	No Change
BRITMP2S	5/24/2013 14:27	15.2	32.6	5.8	46.4	29.89	0	32,767	-0.02	No Change
BRITMP2S	5/31/2013 9:37	11.5	31.6	5.6	51.3	29.38	0	208	0.00	No Change
BRITMP2S	6/7/2013 14:10	12.5	27.1	8.7	51.7	29.33	ND	ND	0.01	No Change
BRITMP2S	6/14/2013 14:03	21.1	33.1	5.4	40.4	29.50	ND	ND	0.00	No Change
BRITMP2S	6/21/2013 14:28	21.4	32.7	6.0	39.9	29.49	ND	ND	0.05	No Change
BRITMP2S	6/27/2013 9:46	20.2	33.0	5.9	40.9	29.33	ND	ND	0.01	No Change
BRITMP2S	7/5/2013 13:59	27.6	40.1	4.8	27.5	29.49	ND	ND	0.00	No Change
BRITMP3D	11/21/2012 10:53	0.4	4.0	19.6	76.0	29.72	ND	ND	0.00	No Change
BRITMP3D	11/29/2012 10:08	0.0	3.6	20.2	76.2	29.67	ND	ND	0.03	No Change
BRITMP3D	12/6/2012 14:23	0.2	3.1	19.9	76.8	29.39	ND	ND	0.00	No Change
BRITMP3D	12/12/2012 14:13	0.0	2.7	19.2	78.1	29.67	ND	ND	0.05	No Change
BRITMP3D	12/18/2012 9:48	0.0	3.6	19.9	76.5	29.21	ND	ND	-0.60	No Change
BRITMP3D	12/28/2012 14:02	0.0	3.3	19.9	76.8	29.37	ND	ND	-1.78	No Change
BRITMP3D	1/4/2013 8:05	0.2	3.0	20.4	76.4	29.83	ND	ND	-0.17	No Change
BRITMP3D	1/10/2013 13:01	0.0	4.0	19.8	76.2	29.52	ND	ND	-0.06	No Change
BRITMP3D	1/18/2013 8:44	0.3	9.1	18.3	72.3	29.88	ND	ND	-0.96	No Change
BRITMP3D	1/25/2013 9:44	0.0	7.9	19.0	73.1	29.62	ND	ND	-0.22	No Change
BRITMP3D	2/1/2013 9:12	0.2	8.5	20.0	71.3	29.86	ND	ND	-0.13	No Change
BRITMP3D	2/6/2013 12:59	0.4	7.1	19.0	73.5	29.65	ND	ND	-0.07	No Change
BRITMP3D	2/15/2013 12:57	0.2	3.8	19.7	76.3	29.49	ND	ND	-0.08	No Change
BRITMP3D	2/22/2013 10:00	0.0	4.9	20.7	74.4	29.27	ND	ND	-0.32	No Change
BRITMP3D	2/28/2013 14:31	0.4	5.0	20.6	74.0	29.33	ND	ND	-0.36	No Change
BRITMP3D	3/8/2013 13:08	0.4	5.0	20.0	74.6	29.73	ND	ND	-0.17	No Change
BRITMP3D	3/14/2013 10:51	0.2	3.6	20.6	75.6	29.54	ND	ND	-0.20	No Change

TABLE 3 - TEMPORARY GAS MONITORING PROBE DATA **Bridgeton Landfill, LLC**
11/21/2012 through 07/05/2013

POINT IDENTIFICATION	SAMPLE DATE - TIME	METHANE [CH_4] (%)	CARBON DIOXIDE [CO_2] (%)	OXYGEN [O_2] (%)	BALANCE [N_2] (%)	BAROMETROC PRESSURE (in. Hg)	CARBON MONOXIDE [CO] (ppm)	HYDROGEN SULFIDE [H_2S] (ppm)	RELATIVE PRESSURE (in. H2O)	COMMENT
BRITMP3D	3/21/2013 10:56	0.1	0.3	21.0	78.6	29.50	ND	ND	-0.10	No Change
BRITMP3D	3/28/2013 11:03	0.7	3.8	19.1	76.4	29.88	ND	ND	-0.23	No Change
BRITMP3D	4/4/2013 14:38	1.7	4.1	19.0	75.2	29.62	ND	ND	-0.13	No Change
BRITMP3D	4/11/2013 9:19	1.7	4.1	19.9	74.3	29.10	ND	ND	-1.53	No Change
BRITMP3D	5/3/2013 11:22	11.7	16.4	14.7	57.2	29.35	ND	ND	-5.24	No Change
BRITMP3D	5/10/2013 9:52	23.5	10.8	13.2	52.5	29.43	0	205	0.42	No Change
BRITMP3D	5/17/2013 8:54	24.7	12.3	12.5	50.5	29.49	0	206	0.00	No Change
BRITMP3D	5/24/2013 14:23	28.7	13.4	11.2	46.7	29.89	0	32,767	-1.22	No Change
BRITMP3D	5/31/2013 9:33	27.6	15.4	11.1	45.9	29.39	0	208	-1.47	No Change
BRITMP3D	6/7/2013 14:08	4.3	2.5	20.9	72.3	29.33	ND	ND	0.46	No Change
BRITMP3D	6/14/2013 14:00	57.1	40.3	0.2	2.4	29.50	ND	ND	-2.71	No Change
BRITMP3D	6/21/2013 14:26	54.8	43.0	0.0	2.2	29.50	ND	ND	5.89	No Change
BRITMP3D	6/27/2013 9:42	54.3	42.6	0.0	3.1	29.33	ND	ND	-0.80	No Change
BRITMP3D	7/5/2013 13:56	52.3	39.7	0.4	7.6	29.49	ND	ND	1.52	No Change
BRITMP3M	11/21/2012 10:51	51.8	42.7	0.0	5.5	29.72	ND	ND	3.10	No Change
BRITMP3M	11/29/2012 10:05	39.7	41.0	2.7	16.6	29.67	ND	ND	3.04	No Change
BRITMP3M	12/6/2012 14:21	48.3	45.7	0.2	5.8	29.39	ND	ND	0.00	No Change
BRITMP3M	12/12/2012 14:11	46.7	45.4	0.4	7.5	29.67	ND	ND	5.49	No Change
BRITMP3M	12/18/2012 9:45	34.1	37.7	4.7	23.5	29.21	ND	ND	3.54	No Change
BRITMP3M	12/28/2012 13:59	47.4	44.5	0.1	8.0	29.37	ND	ND	10.57	No Change
BRITMP3M	1/4/2013 8:02	47.1	46.6	0.5	5.8	29.83	ND	ND	0.22	No Change
BRITMP3M	1/10/2013 12:59	52.8	45.3	0.6	1.3	29.52	ND	ND	13.12	No Change
BRITMP3M	1/18/2013 8:42	48.1	47.0	0.2	4.7	29.88	ND	ND	0.48	No Change
BRITMP3M	1/25/2013 9:43	47.3	45.6	0.0	7.1	29.62	ND	ND	15.23	No Change
BRITMP3M	2/1/2013 9:11	38.3	38.4	4.2	19.1	29.86	ND	ND	-37.08	No Change
BRITMP3M	2/6/2013 12:57	46.6	43.8	1.5	8.1	29.65	ND	ND	0.43	No Change
BRITMP3M	2/15/2013 12:55	48.6	43.7	1.1	6.6	29.49	ND	ND	0.60	No Change
BRITMP3M	2/22/2013 9:58	42.0	41.7	2.6	13.7	29.27	ND	ND	-4.87	No Change
BRITMP3M	2/28/2013 14:29	42.6	40.2	3.3	13.9	29.33	ND	ND	0.08	No Change

TABLE 3 - TEMPORARY GAS MONITORING PROBE DATA **Bridgeton Landfill, LLC**
11/21/2012 through 07/05/2013

POINT IDENTIFICATION	SAMPLE DATE - TIME	METHANE [CH_4] (%)	CARBON DIOXIDE [CO_2] (%)	OXYGEN [O_2] (%)	BALANCE [N_2] (%)	BAROMETROC PRESSURE (in. Hg)	CARBON MONOXIDE [CO] (ppm)	HYDROGEN SULFIDE [H_2S] (ppm)	RELATIVE PRESSURE (in. H2O)	COMMENT
BRITMP3M	3/8/2013 13:07	47.1	43.5	1.1	8.3	29.73	ND	ND	0.43	No Change
BRITMP3M	3/14/2013 10:50	44.5	40.8	2.5	12.2	29.54	ND	ND	0.37	No Change
BRITMP3M	3/21/2013 10:54	20.2	18.0	12.6	49.2	29.50	ND	ND	0.12	No Change
BRITMP3M	3/28/2013 11:01	49.2	37.2	1.8	11.8	29.89	ND	ND	0.56	No Change
BRITMP3M	4/4/2013 14:35	48.5	37.0	2.3	12.2	29.62	ND	ND	0.87	No Change
BRITMP3M	4/11/2013 9:17	61.1	38.8	0.0	0.1	29.11	ND	ND	79.04	No Change
BRITMP3M	5/3/2013 11:21	62.2	37.1	0.0	0.7	29.35	ND	ND	139.63	No Change
BRITMP3M	5/10/2013 9:48	56.9	41.9	0.0	1.2	29.44	0	207	98.33	No Change
BRITMP3M	5/17/2013 8:52	58.9	39.4	1.6	0.1	29.49	0	208	170.48	No Change
BRITMP3M	5/24/2013 14:21	58.4	40.9	0.0	0.7	29.89	0	32,767	147.72	No Change
BRITMP3M	5/31/2013 9:32	50.9	43.2	0.0	5.9	29.39	0	213	133.95	No Change
BRITMP3M	6/7/2013 13:53	49.5	46.0	0.0	4.5	29.34	ND	ND	127.30	No Change
BRITMP3M	6/14/2013 13:59	53.6	45.6	0.0	0.8	29.51	ND	ND	183.86	No Change
BRITMP3M	6/21/2013 14:25	52.0	47.4	0.0	0.6	29.50	ND	ND	-0.09	No Change
BRITMP3M	6/21/2013 14:26	54.8	43.0	0.0	2.2	29.50	ND	ND	5.89	No Change
BRITMP3M	6/27/2013 9:41	49.8	46.2	0.0	4.0	29.33	ND	ND	127.47	No Change
BRITMP3M	7/5/2013 13:54	50.8	43.3	0.1	5.8	29.49	ND	ND	14.54	No Change
BRITMP3S	11/21/2012 10:49	57.5	20.6	3.2	18.7	29.72	ND	ND	0.00	No Change
BRITMP3S	11/29/2012 10:03	54.4	19.4	3.3	22.9	29.67	ND	ND	-0.07	No Change
BRITMP3S	12/6/2012 14:19	55.8	20.8	3.4	20.0	29.39	ND	ND	0.00	No Change
BRITMP3S	12/12/2012 14:09	51.5	18.5	4.3	25.7	29.67	ND	ND	0.03	No Change
BRITMP3S	12/18/2012 9:43	51.2	20.9	3.6	24.3	29.21	ND	ND	-9.89	No Change
BRITMP3S	12/28/2012 13:57	53.1	21.7	3.3	21.9	29.38	ND	ND	-0.25	No Change
BRITMP3S	1/4/2013 7:59	49.8	23.0	4.2	23.0	29.83	ND	ND	0.00	No Change
BRITMP3S	1/10/2013 12:58	6.8	4.7	18.1	70.4	29.53	ND	ND	0.00	No Change
BRITMP3S	1/18/2013 8:38	0.0	0.5	21.1	78.4	29.88	ND	ND	0.04	No Change
BRITMP3S	1/25/2013 9:41	31.8	11.8	6.8	49.6	29.62	ND	ND	0.00	No Change
BRITMP3S	2/1/2013 9:10	7.9	1.5	18.6	72.0	29.87	ND	ND	-9.55	No Change
BRITMP3S	2/6/2013 12:56	5.2	1.5	19.1	74.2	29.66	ND	ND	-0.03	No Change

TABLE 3 - TEMPORARY GAS MONITORING PROBE DATA
11/21/2012 through 07/05/2013

Bridgeton Landfill, LLC

POINT IDENTIFICATION	SAMPLE DATE - TIME	METHANE [CH_4] (%)	CARBON DIOXIDE [CO_2] (%)	OXYGEN [O_2] (%)	BALANCE [N_2] (%)	BAROMETROC PRESSURE (in. Hg)	CARBON MONOXIDE [CO] (ppm)	HYDROGEN SULFIDE [H_2S] (ppm)	RELATIVE PRESSURE (in. H2O)	COMMENT
BRITMP3S	2/15/2013 12:54	39.3	11.3	5.1	44.3	29.49	ND	ND	0.17	No Change
BRITMP3S	2/22/2013 9:57	50.4	14.3	2.2	33.1	29.28	ND	ND	0.05	No Change
BRITMP3S	2/28/2013 14:27	60.3	11.7	1.6	26.4	29.33	ND	ND	0.08	No Change
BRITMP3S	3/8/2013 13:06	66.8	14.6	0.4	18.2	29.73	ND	ND	0.10	No Change
BRITMP3S	3/14/2013 10:48	55.7	18.0	4.1	22.2	29.54	ND	ND	0.27	No Change
BRITMP3S	3/21/2013 10:52	65.5	13.8	3.0	17.7	29.49	ND	ND	0.43	No Change
BRITMP3S	3/28/2013 11:00	72.3	11.2	2.4	14.1	29.89	ND	ND	0.38	No Change
BRITMP3S	4/4/2013 14:34	65.2	18.8	2.8	13.2	29.62	ND	ND	0.25	No Change
BRITMP3S	4/11/2013 9:13	60.8	38.8	0.0	0.4	29.10	ND	ND	25.13	No Change
BRITMP3S	5/3/2013 11:21	64.2	35.4	0.0	0.4	29.36	ND	ND	33.86	No Change
BRITMP3S	5/10/2013 9:47	60.4	38.2	0.0	1.4	29.44	0	206	10.80	No Change
BRITMP3S	5/17/2013 8:51	59.9	39.3	0.0	0.8	29.49	0	206	20.80	No Change
BRITMP3S	5/24/2013 14:20	59.1	40.3	0.0	0.6	29.90	0	32,767	28.05	No Change
BRITMP3S	5/31/2013 9:31	56.7	41.5	0.0	1.8	29.39	0	213	17.76	No Change
BRITMP3S	6/7/2013 13:47	56.9	41.3	0.0	1.8	29.34	ND	ND	10.70	No Change
BRITMP3S	6/14/2013 13:58	54.3	45.6	0.0	0.1	29.51	ND	ND	25.76	No Change
BRITMP3S	6/21/2013 14:24	51.3	45.2	0.0	3.5	29.50	ND	ND	14.83	No Change
BRITMP3S	6/27/2013 9:40	50.3	46.5	0.0	3.2	29.33	ND	ND	19.37	No Change
BRITMP3S	7/5/2013 13:52	48.3	46.3	0.0	5.4	29.49	ND	ND	26.48	No Change

TABLE 4 - PUBLIC SAFETY GAS MONITORING PROBE DATA **Bridgeton Landfill, LLC**
11/21/2012 through 07/05/2013

POINT IDENTIFICATION	SAMPLE DATE - TIME	METHANE [CH_4] (%)	CARBON DIOXIDE [CO_2] (%)	OXYGEN [O_2] (%)	BALANCE [N_2] (%)	BAROMETROC PRESSURE (in. Hg)	CARBON MONOXIDE [CO] (ppm)	HYDROGEN SULFIDE [H_2S] (ppm)	RELATIVE PRESSURE (in. H2O)	COMMENT
BRIGMP10	11/21/2012 11:11	0.0	0.5	20.4	79.1	29.71	ND	ND	0.00	No Change
BRIGMP10	11/29/2012 10:28	0.0	2.7	19.6	77.7	29.66	ND	ND	-19.94	No Change
BRIGMP10	12/6/2012 14:59	0.0	1.2	20.1	78.7	29.39	ND	ND	0.00	No Change
BRIGMP10	12/12/2012 14:29	0.0	2.1	19.6	78.3	29.66	ND	ND	0.00	No Change
BRIGMP10	12/18/2012 10:03	0.0	3.0	17.5	79.5	29.19	ND	ND	0.66	No Change
BRIGMP10	12/28/2012 14:26	0.0	2.1	19.1	78.8	29.35	ND	ND	0.16	No Change
BRIGMP10	1/4/2013 8:22	0.0	0.5	17.9	81.6	29.84	ND	ND	0.00	No Change
BRIGMP10	1/10/2013 13:13	0.0	4.3	18.3	77.4	29.50	ND	ND	1.34	No Change
BRIGMP10	1/18/2013 8:59	0.0	3.6	19.3	77.1	29.87	ND	ND	0.10	No Change
BRIGMP10	1/25/2013 9:56	0.0	5.6	18.9	75.5	29.62	ND	ND	0.00	No Change
BRIGMP10	2/1/2013 9:23	0.0	5.1	20.3	74.6	29.83	ND	ND	0.06	No Change
BRIGMP10	2/6/2013 13:12	0.0	1.6	18.9	79.5	29.63	ND	ND	-10.69	No Change
BRIGMP10	2/15/2013 13:07	0.0	2.3	13.4	84.3	29.50	ND	ND	-4.83	No Change
BRIGMP10	2/22/2013 10:17	0.0	3.7	13.4	82.9	29.23	ND	ND	-3.39	No Change
BRIGMP10	2/28/2013 14:52	0.0	1.7	11.6	86.7	29.31	ND	ND	-1.30	No Change
BRIGMP10	3/8/2013 12:39	0.0	1.6	11.2	87.2	29.75	ND	ND	-7.91	No Change
BRIGMP10	3/14/2013 11:04	0.0	2.9	11.7	85.4	29.52	ND	ND	-3.92	No Change
BRIGMP10	3/21/2013 11:12	0.0	0.3	15.4	84.3	29.50	ND	ND	-5.15	No Change
BRIGMP10	3/28/2013 11:24	0.0	0.4	10.9	88.7	29.88	ND	ND	-32.32	No Change
BRIGMP10	4/4/2013 14:53	0.0	0.3	19.0	80.7	29.62	ND	ND	-5.06	No Change
BRIGMP10	4/11/2013 9:38	0.0	0.5	19.0	80.5	29.10	ND	ND	-1.12	No Change
BRIGMP10	5/3/2013 11:37	0.0	0.8	21.3	77.9	29.33	ND	ND	0.37	No Change
BRIGMP10	5/10/2013 10:15	0.0	0.7	15.2	84.1	29.45	0	204	-1.58	No Change
BRIGMP10	5/17/2013 9:09	0.0	0.4	20.5	79.1	29.49	0	199	-8.77	No Change
BRIGMP10	5/24/2013 14:41	0.0	0.3	19.9	79.8	29.86	0	32,767	1.37	No Change
BRIGMP10	5/31/2013 9:58	0.0	0.4	18.8	80.8	29.39	0	202	-0.12	No Change
BRIGMP10	6/7/2013 14:20	0.0	0.6	22.5	76.9	29.33	ND	ND	-5.34	No Change
BRIGMP10	6/14/2013 14:20	0.0	0.3	17.4	82.3	29.51	ND	ND	-2.01	No Change
BRIGMP10	6/21/2013 14:39	0.0	1.4	19.5	79.1	29.49	ND	ND	0.05	No Change

TABLE 4 - PUBLIC SAFETY GAS MONITORING PROBE DATA **Bridgeton Landfill, LLC**
11/21/2012 through 07/05/2013

POINT IDENTIFICATION	SAMPLE DATE - TIME	METHANE [CH_4] (%)	CARBON DIOXIDE [CO_2] (%)	OXYGEN [O_2] (%)	BALANCE [N_2] (%)	BAROMETROC PRESSURE (in. Hg)	CARBON MONOXIDE [CO] (ppm)	HYDROGEN SULFIDE [H_2S] (ppm)	RELATIVE PRESSURE (in. H2O)	COMMENT
BRIGMP10	6/27/2013 10:09	0.0	0.2	17.6	82.2	29.34	ND	ND	0.35	No Change
BRIGMP10	7/5/2013 14:24	0.0	0.2	18.0	81.8	29.51	ND	ND	-4.74	No Change
BRIGMP11	11/21/2012 11:19	0.0	1.3	20.2	78.5	29.71	ND	ND	-0.01	No Change
BRIGMP11	11/29/2012 10:35	0.0	1.0	19.8	79.2	29.66	ND	ND	-45.78	No Change
BRIGMP11	12/6/2012 15:05	0.0	2.0	19.6	78.4	29.39	ND	ND	0.00	No Change
BRIGMP11	12/12/2012 14:37	0.0	0.4	20.1	79.5	29.64	ND	ND	-0.01	No Change
BRIGMP11	12/18/2012 10:10	0.0	1.6	19.9	78.5	29.20	ND	ND	-0.01	No Change
BRIGMP11	12/28/2012 14:32	0.0	1.9	19.5	78.6	29.36	ND	ND	-5.23	No Change
BRIGMP11	1/4/2013 8:32	0.0	1.7	20.7	77.6	29.84	ND	ND	0.00	No Change
BRIGMP11	1/10/2013 13:19	0.0	2.5	18.8	78.7	29.49	ND	ND	-16.76	No Change
BRIGMP11	1/18/2013 9:06	0.0	3.6	18.2	78.2	29.87	ND	ND	-5.25	No Change
BRIGMP11	1/25/2013 10:04	0.0	2.1	19.9	78.0	29.62	ND	ND	-19.37	No Change
BRIGMP11	2/1/2013 9:31	0.0	1.9	21.6	76.5	29.82	ND	ND	-3.75	No Change
BRIGMP11	2/6/2013 13:18	0.0	1.7	20.3	78.0	29.60	ND	ND	-19.60	No Change
BRIGMP11	2/15/2013 13:13	0.0	1.3	20.2	78.5	29.50	ND	ND	-6.90	No Change
BRIGMP11	2/22/2013 10:26	0.0	2.4	20.1	77.5	29.22	ND	ND	1.30	No Change
BRIGMP11	2/28/2013 15:00	0.0	2.4	20.0	77.6	29.30	ND	ND	-12.86	No Change
BRIGMP11	3/8/2013 12:46	0.0	1.6	20.6	77.8	29.74	ND	ND	-21.87	No Change
BRIGMP11	3/14/2013 11:10	0.0	1.9	20.9	77.2	29.51	ND	ND	-17.38	No Change
BRIGMP11	3/21/2013 11:21	0.0	0.6	20.6	78.8	29.49	ND	ND	-1.53	No Change
BRIGMP11	3/28/2013 11:34	0.0	1.6	17.6	80.8	29.88	ND	ND	0.00	No Change
BRIGMP11	4/4/2013 14:59	0.0	1.3	17.4	81.3	29.60	ND	ND	-22.18	No Change
BRIGMP11	4/11/2013 9:43	0.0	0.6	19.0	80.4	29.08	ND	ND	-24.12	No Change
BRIGMP11	5/3/2013 11:43	0.0	1.4	20.4	78.2	29.31	ND	ND	0.75	No Change
BRIGMP11	5/10/2013 10:24	0.0	1.1	19.5	79.4	29.43	0	203	0.08	No Change
BRIGMP11	5/17/2013 9:17	0.0	0.1	20.3	79.6	29.49	0	199	-18.73	No Change
BRIGMP11	5/24/2013 14:49	0.0	0.7	20.4	78.9	29.86	0	32,767	0.11	No Change
BRIGMP11	5/31/2013 10:05	0.0	1.0	19.4	79.6	29.38	0	204	-5.48	No Change
BRIGMP11	6/7/2013 14:25	0.0	1.0	22.0	77.0	29.32	ND	ND	-1.20	No Change

TABLE 4 - PUBLIC SAFETY GAS MONITORING PROBE DATA **Bridgeton Landfill, LLC**
11/21/2012 through 07/05/2013

POINT IDENTIFICATION	SAMPLE DATE - TIME	METHANE [CH_4] (%)	CARBON DIOXIDE [CO_2] (%)	OXYGEN [O_2] (%)	BALANCE [N_2] (%)	BAROMETROC PRESSURE (in. Hg)	CARBON MONOXIDE [CO] (ppm)	HYDROGEN SULFIDE [H_2S] (ppm)	RELATIVE PRESSURE (in. H2O)	COMMENT
BRIGMP11	6/14/2013 14:27	0.0	0.6	19.9	79.5	29.51	ND	ND	-22.68	No Change
BRIGMP11	6/21/2013 14:47	0.0	0.9	18.8	80.3	29.49	ND	ND	-3.23	No Change
BRIGMP11	6/27/2013 10:19	0.0	0.3	19.1	80.6	29.34	ND	ND	0.73	No Change
BRIGMP11	7/5/2013 14:33	0.0	0.4	19.0	80.6	29.50	ND	ND	-1.45	No Change
BRIGMP12	11/21/2012 11:22	0.0	1.1	20.3	78.6	29.70	ND	ND	0.00	No Change
BRIGMP12	11/29/2012 10:50	0.0	4.1	18.1	77.8	29.64	ND	ND	-10.33	No Change
BRIGMP12	12/6/2012 15:08	0.0	1.6	20.0	78.4	29.39	ND	ND	0.00	No Change
BRIGMP12	12/12/2012 14:38	0.0	0.2	20.1	79.7	29.64	ND	ND	-0.01	No Change
BRIGMP12	12/18/2012 10:12	0.0	2.0	19.5	78.5	29.19	ND	ND	0.90	No Change
BRIGMP12	12/28/2012 14:34	0.0	2.5	19.3	78.2	29.36	ND	ND	-2.48	No Change
BRIGMP12	1/4/2013 8:34	0.0	1.7	20.2	78.1	29.84	ND	ND	0.00	No Change
BRIGMP12	1/10/2013 13:21	0.0	2.9	19.4	77.7	29.49	ND	ND	-6.28	No Change
BRIGMP12	1/18/2013 9:10	0.0	1.7	19.7	78.6	29.86	ND	ND	-11.36	No Change
BRIGMP12	1/25/2013 10:06	0.0	2.7	19.5	77.8	29.62	ND	ND	-7.91	No Change
BRIGMP12	2/1/2013 9:34	0.0	1.8	22.7	75.5	29.81	ND	ND	0.07	No Change
BRIGMP12	2/6/2013 13:23	0.0	1.6	20.5	77.9	29.59	ND	ND	-1.10	No Change
BRIGMP12	2/15/2013 13:15	0.0	2.1	20.1	77.8	29.49	ND	ND	-7.07	No Change
BRIGMP12	2/22/2013 10:30	0.0	2.6	20.9	76.5	29.21	ND	ND	-9.96	No Change
BRIGMP12	2/28/2013 15:04	0.0	1.9	21.5	76.6	29.29	ND	ND	-4.33	No Change
BRIGMP12	3/8/2013 12:48	0.0	1.2	20.6	78.2	29.73	ND	ND	-8.24	No Change
BRIGMP12	3/14/2013 11:13	0.0	1.0	20.2	78.8	29.50	ND	ND	-4.95	No Change
BRIGMP12	3/21/2013 11:24	0.0	0.3	20.6	79.1	29.49	ND	ND	-0.76	No Change
BRIGMP12	3/28/2013 11:36	0.0	0.1	20.6	79.3	29.87	ND	ND	-0.01	No Change
BRIGMP12	4/4/2013 15:01	0.0	0.5	17.2	82.3	29.60	ND	ND	-4.47	No Change
BRIGMP12	4/11/2013 9:47	0.0	0.1	21.1	78.8	29.08	ND	ND	-0.60	No Change
BRIGMP12	5/3/2013 11:46	0.0	0.8	21.1	78.1	29.32	ND	ND	-0.05	No Change
BRIGMP12	5/10/2013 10:26	0.0	0.8	20.9	78.3	29.43	0	203	0.73	No Change
BRIGMP12	5/17/2013 9:22	0.0	0.6	20.7	78.7	29.48	0	199	-0.01	No Change
BRIGMP12	5/24/2013 14:51	0.0	0.3	20.8	78.9	29.86	0	32,767	0.59	No Change

TABLE 4 - PUBLIC SAFETY GAS MONITORING PROBE DATA **Bridgeton Landfill, LLC**
11/21/2012 through 07/05/2013

POINT IDENTIFICATION	SAMPLE DATE - TIME	METHANE [CH_4] (%)	CARBON DIOXIDE [CO_2] (%)	OXYGEN [O_2] (%)	BALANCE [N_2] (%)	BAROMETROC PRESSURE (in. Hg)	CARBON MONOXIDE [CO] (ppm)	HYDROGEN SULFIDE [H_2S] (ppm)	RELATIVE PRESSURE (in. H2O)	COMMENT
BRIGMP12	5/31/2013 10:07	0.0	0.8	20.6	78.6	29.39	0	203	-5.83	No Change
BRIGMP12	6/7/2013 14:29	0.0	0.8	22.2	77.0	29.32	ND	ND	2.34	No Change
BRIGMP12	6/14/2013 14:29	0.0	0.6	19.9	79.5	29.51	ND	ND	-3.61	No Change
BRIGMP12	6/21/2013 14:50	0.0	1.0	18.9	80.1	29.48	ND	ND	0.89	No Change
BRIGMP12	6/27/2013 10:25	0.0	0.2	19.2	80.6	29.34	ND	ND	2.20	No Change
BRIGMP12	7/5/2013 14:41	0.0	0.5	18.9	80.6	29.50	ND	ND	0.03	No Change
PZ2040SS	11/21/2012 11:16	0.0	0.5	20.5	79.0	29.71	ND	ND	0.00	No Change
PZ2040SS	11/29/2012 10:33	0.0	1.2	20.1	78.7	29.65	ND	ND	-27.83	No Change
PZ2040SS	12/6/2012 15:03	0.0	0.8	20.2	79.0	29.39	ND	ND	0.00	No Change
PZ2040SS	12/12/2012 14:35	0.0	0.5	20.1	79.4	29.66	ND	ND	0.00	No Change
PZ2040SS	12/18/2012 10:07	0.0	1.6	20.0	78.4	29.19	ND	ND	0.27	No Change
PZ2040SS	12/28/2012 14:30	0.0	1.7	19.8	78.5	29.35	ND	ND	-15.13	No Change
PZ2040SS	1/4/2013 8:29	0.0	1.0	21.7	77.3	29.84	ND	ND	0.00	No Change
PZ2040SS	1/10/2013 13:17	0.0	2.5	19.3	78.2	29.49	ND	ND	-17.62	No Change
PZ2040SS	1/18/2013 9:03	0.0	2.3	19.4	78.3	29.87	ND	ND	-2.84	No Change
PZ2040SS	1/25/2013 10:00	0.0	2.5	19.5	78.0	29.62	ND	ND	-20.34	No Change
PZ2040SS	2/1/2013 9:28	0.0	2.6	21.7	75.7	29.80	ND	ND	-20.57	No Change
PZ2040SS	2/6/2013 13:16	0.0	1.9	19.5	78.6	29.60	ND	ND	-18.16	No Change
PZ2040SS	2/15/2013 13:11	0.0	1.6	19.5	78.9	29.49	ND	ND	-2.12	No Change
PZ2040SS	2/22/2013 10:23	0.0	2.7	19.3	78.0	29.22	ND	ND	-8.82	No Change
PZ2040SS	2/28/2013 14:57	0.0	2.5	19.3	78.2	29.30	ND	ND	-12.77	No Change
PZ2040SS	3/14/2013 11:07	0.0	2.3	18.1	79.6	29.51	ND	ND	-17.09	No Change
PZ2040SS	3/21/2013 11:18	0.0	0.6	19.6	79.8	29.49	ND	ND	-12.41	No Change
PZ2040SS	3/28/2013 11:30	0.0	1.5	17.5	81.0	29.88	ND	ND	-15.49	No Change
PZ2040SS	4/4/2013 14:57	0.0	1.2	17.4	81.4	29.60	ND	ND	-9.03	No Change
PZ2040SS	4/11/2013 10:31	0.0	0.3	20.5	79.2	29.09	ND	ND	-0.01	No Change
PZ2040SS	5/3/2013 11:41	0.0	1.2	19.6	79.2	29.31	ND	ND	0.48	No Change
PZ2040SS	5/10/2013 10:21	0.0	1.1	19.6	79.3	29.43	0	203	0.00	No Change
PZ2040SS	5/17/2013 9:14	0.0	0.7	19.9	79.4	29.49	0	200	0.00	No Change

TABLE 4 - PUBLIC SAFETY GAS MONITORING PROBE DATA **Bridgeton Landfill, LLC**
11/21/2012 through 07/05/2013

POINT IDENTIFICATION	SAMPLE DATE - TIME	METHANE [CH_4] (%)	CARBON DIOXIDE [CO_2] (%)	OXYGEN [O_2] (%)	BALANCE [N_2] (%)	BAROMETROC PRESSURE (in. Hg)	CARBON MONOXIDE [CO] (ppm)	HYDROGEN SULFIDE [H_2S] (ppm)	RELATIVE PRESSURE (in. H2O)	COMMENT
PZ2040SS	5/24/2013 14:47	0.0	0.8	19.9	79.3	29.86	0	32,767	-1.23	No Change
PZ2040SS	5/31/2013 10:03	0.0	0.7	19.9	79.4	29.38	0	203	-3.12	No Change
PZ2040SS	6/7/2013 14:50	0.0	2.2	21.3	76.5	29.31	ND	ND	-2.18	No Change
PZ2040SS	6/14/2013 14:24	0.0	0.5	20.0	79.5	29.51	ND	ND	-0.03	No Change
PZ2040SS	6/21/2013 14:43	0.0	0.6	21.5	77.9	29.49	ND	ND	-0.13	No Change
PZ2040SS	6/27/2013 10:14	0.0	0.4	18.8	80.8	29.34	ND	ND	0.01	No Change
PZ2040SS	7/5/2013 14:27	0.0	0.3	19.1	80.6	29.51	ND	ND	0.02	No Change
PZ204ASS	11/21/2012 11:14	0.0	0.4	20.9	78.7	29.71	ND	ND	0.00	No Change
PZ204ASS	11/29/2012 10:31	0.0	1.8	20.1	78.1	29.66	ND	ND	0.46	No Change
PZ204ASS	12/6/2012 15:02	0.0	0.9	20.1	79.0	29.39	ND	ND	0.00	No Change
PZ204ASS	12/12/2012 14:33	0.0	1.3	19.8	78.9	29.66	ND	ND	0.00	No Change
PZ204ASS	12/18/2012 10:06	0.0	2.0	19.6	78.4	29.19	ND	ND	0.44	No Change
PZ204ASS	12/28/2012 14:28	0.0	1.6	19.6	78.8	29.35	ND	ND	-0.19	No Change
PZ204ASS	1/4/2013 8:26	0.0	0.9	20.1	79.0	29.84	ND	ND	0.00	No Change
PZ204ASS	1/10/2013 13:15	0.0	3.0	18.6	78.4	29.49	ND	ND	-15.58	No Change
PZ204ASS	1/18/2013 9:01	0.0	4.0	20.1	75.9	29.87	ND	ND	0.83	No Change
PZ204ASS	1/25/2013 9:59	0.0	2.6	19.1	78.3	29.62	ND	ND	-12.70	No Change
PZ204ASS	2/1/2013 9:26	0.0	4.6	22.3	73.1	29.82	ND	ND	0.03	No Change
PZ204ASS	2/6/2013 13:15	0.0	1.4	18.4	80.2	29.61	ND	ND	-2.05	No Change
PZ204ASS	2/15/2013 13:09	0.0	1.4	19.0	79.6	29.49	ND	ND	-6.52	No Change
PZ204ASS	2/22/2013 10:20	0.0	2.6	18.1	79.3	29.23	ND	ND	-15.97	No Change
PZ204ASS	2/28/2013 14:55	0.0	2.3	18.2	79.5	29.30	ND	ND	-16.01	No Change
PZ204ASS	3/8/2013 12:41	0.0	2.0	17.2	80.8	29.75	ND	ND	-21.40	No Change
PZ204ASS	3/8/2013 12:43	0.0	2.1	17.9	80.0	29.75	ND	ND	-15.79	No Change
PZ204ASS	3/14/2013 11:06	0.0	3.9	16.9	79.2	29.51	ND	ND	-19.03	No Change
PZ204ASS	3/21/2013 11:16	0.0	0.9	20.3	78.8	29.49	ND	ND	-20.71	No Change
PZ204ASS	3/28/2013 11:27	0.0	5.0	16.7	78.3	29.87	ND	ND	-16.00	No Change
PZ204ASS	4/4/2013 14:55	0.0	2.8	18.6	78.6	29.61	ND	ND	0.26	No Change
PZ204ASS	4/11/2013 10:28	0.0	2.5	18.8	78.7	29.08	ND	ND	0.00	No Change

TABLE 4 - PUBLIC SAFETY GAS MONITORING PROBE DATA
11/21/2012 through 07/05/2013

Bridgeton Landfill, LLC

POINT IDENTIFICATION	SAMPLE DATE - TIME	METHANE [CH_4] (%)	CARBON DIOXIDE [CO_2] (%)	OXYGEN [O_2] (%)	BALANCE [N_2] (%)	BAROMETROC PRESSURE (in. Hg)	CARBON MONOXIDE [CO] (ppm)	HYDROGEN SULFIDE [H_2S] (ppm)	RELATIVE PRESSURE (in. H2O)	COMMENT
PZ204ASS	5/3/2013 11:39	0.0	0.6	20.1	79.3	29.32	ND	ND	-0.07	No Change
PZ204ASS	5/10/2013 10:19	0.0	0.8	20.2	79.0	29.43	0	203	0.29	No Change
PZ204ASS	5/17/2013 9:12	0.0	0.5	20.6	78.9	29.49	0	199	0.00	No Change
PZ204ASS	5/24/2013 14:44	0.0	0.4	20.3	79.3	29.85	0	32,767	0.00	No Change
PZ204ASS	5/31/2013 10:01	0.0	0.6	20.5	78.9	29.39	0	203	0.00	No Change
PZ204ASS	6/7/2013 14:49	0.0	3.4	21.1	75.5	29.31	ND	ND	-1.78	No Change
PZ204ASS	6/14/2013 14:22	0.0	0.4	20.2	79.4	29.51	ND	ND	0.00	No Change
PZ204ASS	6/21/2013 14:41	0.0	0.8	21.3	77.9	29.49	ND	ND	-0.13	No Change
PZ204ASS	6/27/2013 10:12	0.0	0.3	18.9	80.8	29.34	ND	ND	0.00	No Change
PZ204ASS	7/5/2013 14:26	0.0	0.2	19.1	80.7	29.51	ND	ND	0.03	No Change

APPENDIX A

GAS MONITORING PROBE METHANE LEVEL GRAPHS

APPENDIX B

GMP AND TMP BORING LOGS / CONSTRUCTION LOGS

Bridgeton Landfill
Landfill Gas Monitoring Probes
July 2013

ID	CSV ID	POINT NAME	Ref Boring/installation Record	Type	Current Monitoring Frequency
GMP-01	BRIGMP01	MP01	GMP-01	Compliance probe	weekly
GMP-02	BRIGMP02	MP02	GMP-02	Compliance probe	weekly
GMP-03	BRIGMP03	MP03	GMP-03	Compliance probe	weekly
GMP-04	BRIGMP04	MP04	GMP-04	Sentry probe	quarterly
GMP-05	BRIGMP05	MP05	GMP-05	Sentry probe	quarterly
GMP-06	BRIGMP06	MP06	PZ-201-SS	Sentry probe	quarterly
GMP-07	BRIGMP07	MP07	PZ-200-SS	Sentry probe	quarterly
GMP-08	BRIGMP08	MP08	GMP-08	Compliance probe	quarterly
GMP-09	BRIGMP09	MP09	GMP-09	Public Safety Probe	weekly
GMP-10	BRIGMP10	MP10	GMP-10	Public Safety Probe	weekly
GMP-11	BRIGMP11	MP11	GMP-11	Public Safety Probe	weekly
GMP-12	BRIGMP12	MP12	GMP-12	Public Safety Probe	weekly
GMP-4S	BRIGMP4S	BRIGMP4S	GMP-04	Compliance nested probe	weekly
GMP-4D	BRIGMP4D	BRIGMP4D	GMP-04	Compliance nested probe	weekly
GMP-5S	BRIGMP5S	BRIGMP5S	GMP-05	Compliance nested probe	weekly
GMP-5D	BRIGMP5D	BRIGMP5D	GMP-05	Compliance nested probe	weekly
GMP-6S	BRIGMP6S	BRIGMP6S	GMP-06	Compliance nested probe	weekly
GMP-6D	BRIGMP6D	BRIGMP6D	GMP-06	Compliance nested probe	weekly
GMP-7S	BRIGMP7S	BRIGMP7S	GMP-07	Compliance nested probe	weekly
GMP-7D	BRIGMP7D	BRIGMP7D	GMP-07	Compliance nested probe	weekly
GMP-13S	BRGMP13S	BRGMP13S	GMP-13	Compliance nested probe	weekly
GMP-13D	BRGMP13D	BRGMP13D	GMP-13	Compliance nested probe	weekly
GMP-14S	BRGMP14S	BRGMP14S	GMP-14	Compliance nested probe	weekly
GMP-14D	BRGMP14D	BRGMP14D	GMP-14	Compliance nested probe	weekly
GMP-15S	BRGMP15S	BRGMP15S	GMP-15	Compliance nested probe	weekly
GMP-15D	BRGMP15D	BRGMP15D	GMP-15	Compliance nested probe	weekly
GMP-16S	BRGMP16S	BRGMP16S	GMP-16	Compliance nested probe	weekly
GMP-16D	BRGMP16D	BRGMP16D	GMP-16	Compliance nested probe	weekly
TMP-1S	BRITMP1S	BRITMP1S	TMP-01	Investigative nested probe	weekly
TMP-1M	BRITMP1M	BRITMP1M	TMP-01	Investigative nested probe	weekly
TMP-1D	BRITMP1D	BRITMP1D	TMP-01	Investigative nested probe	weekly
TMP-2S	BRITMP2S	BRITMP2S	TMP-02	Investigative nested probe	weekly
TMP-2M	BRITMP2M	BRITMP2M	TMP-02	Investigative nested probe	weekly
TMP-2D	BRITMP2D	BRITMP2D	TMP-02	Investigative nested probe	weekly
TMP-3S	BRITMP3S	BRITMP3S	TMP-03	Investigative nested probe	weekly
TMP-3M	BRITMP3M	BRITMP3M	TMP-03	Investigative nested probe	weekly
TMP-3D	BRITMP3D	BRITMP3D	TMP-03	Investigative nested probe	weekly
PZ-204-SS	PZ2040SS	4OSS	PZ-204-SS	Public Safety Probe	weekly
PZ-204-ASS	PZ204ASS	4ASS	PZ-204-ASS	Public Safety Probe	weekly

GMP-1
As Built Diagram

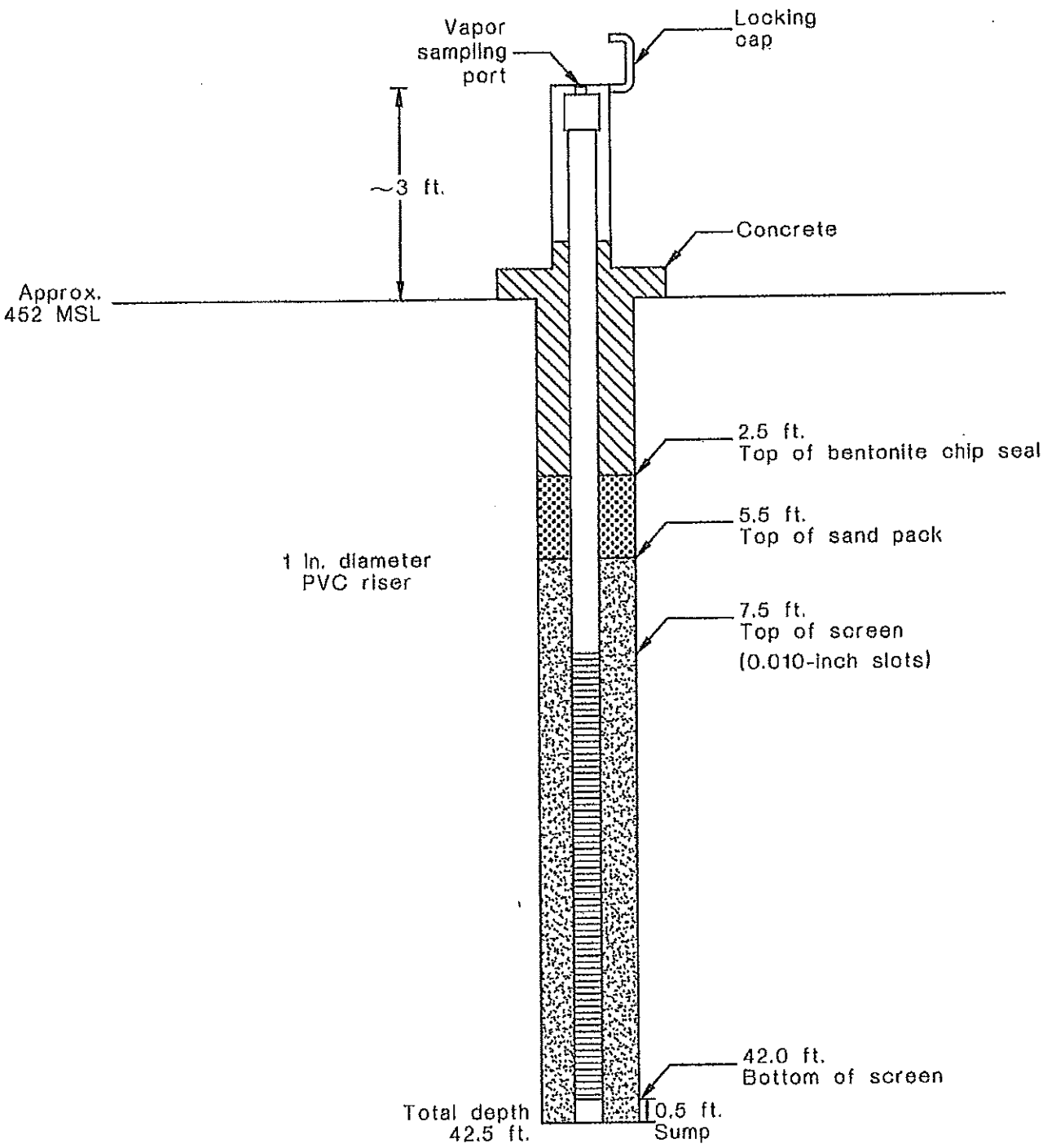

(Not to Scale)

All depths relative to ground surface

2206S-BL
GMP
GMP-1

GMP-01

MISSOURI DEPARTMENT OF NATURAL RESOURCES
DIVISION OF GEOLOGY AND LAND SURVEY

MONITORING WELL CERTIFICATION RECORD

OFFICE USE ONLY	
REF. NO. 146363	DATE RECEIVED
C.R. NO.	CHECK NO.
STATE WELL NUMBER	TRANSMITTAL NO.
CHECKED BY	ROUTE
APPROVED BY	ENTERED Ph 1 Ph 2 Ph 3

INFORMATION SUPPLIED BY MONITORING WELL CONTRACTOR

SITE/FACILITY NAME: Bridgeton Landfill Authority
WELL NUMBER: GMP-1
SITE ADDRESS: 13570 St. Charles Rock Rd
CITY: Bridgeton
STATE: Mo
ZIP CODE: 63042
OWNER NAME: Same
TELEPHONE: 314 739 1999
OWNER ADDRESS:
CITY:
STATE:
ZIP CODE:

VARIANCE ISSUED: ☑ YES ☐ NO
DATE ISSUED: 10-23-97
VARIANCE NUMBER: V 833

DESCRIBE LOCATION OF THE WELL SO WE WOULD BE ABLE TO VISIT IT: South Side of Landfill off St. Charles Rock Rd

LOCATION OF WELL SHOW LOCATION IN SECTION PLAT
COUNTY: St. Louis
SURFACE ELEVATION: ≈478'
SMALLEST ¼ ___ ¼ ___ ¼ ___ ¼ LARGEST ¼
SEC. ___ TWN. ___ N,RNG. ___ E OR W
LAT. 92. 26. 54" LONG. 38. 46. 12.

MONITORING WELL INSTALLATION CONTRACTOR'S NAME: Layne-Western
PERMIT NUMBER: 00128L.WPM
DRILLING CONTRACTOR'S NAME: Layne-Western
PERMIT NUMBER: 00128L.WPM

WELL CONSTRUCTION INFORMATION

TYPE OF WELL: ☐ MONITORING WELL ☐ PIEZOMETER ☑ OTHER Gas Probe
TYPE OF POTENTIAL SITE: ☐ HAZARDOUS MATERIAL ☑ LANDFILL ☐ OTHER ☐ L.U.S.T.
MONITORING FOR: (CHECK ALL THAT APPLY) ☐ V.O.C. ☐ METALS ☐ PETROLEUM PRODUCT ☑ OTHER GAS ONLY

PROTECTIVE CASING DETAILS (IF USED): LENGTH 5 FT. DIAMETER OF CASING 6 IN. WEIGHT OR SDR # 40 DIAMETER AND DEPTH OF DRILL HOLE 2.5 IN. 2 FT. JOINTS ☐ MECHANICAL ☐ THREADED ☑ WELDED ☐ OTHER MATERIAL ☐ STEEL ☑ THERMO PLASTIC ☐ FLUORO POLYMER TYPE LOCKING CAP? ☑ YES ☐ NO

CAP VENTED ☐ YES ☑ NO WEEP HOLE? ☑ YES ☐ NO
CASING GROUT DETAILS: MATERIAL ☐ CEMENT ☑ CONCRETE ☐ OTHER
DEPTH FROM THE SURFACE TO THE BOTTOM OF THE CASING GROUT SEAL: 3' FT.
TYPE OF SURFACE COMPLETION: ☑ ABOVE GROUND ☐ FLUSH MOUNT
DESCRIBE HOW THE FLUSH MOUNT WAS CONSTRUCTED: N/A

CENTRALIZER USED ON RISER ☑ NO ☐ YES LOCATED AT
MATERIAL ☐ STAINLESS STEEL ☐ OTHER

RISER PIPE DETAILS: LENGTH 13 FT. DIAMETER OF RISER PIPE 1 IN. WEIGHT OR SDR # 80 DIAMETER OF DRILL HOLE 6 IN. JOINTS ☐ MECHANICAL ☐ THREADED ☐ WELDED ☐ OTHER MATERIAL ☑ STEEL ☑ THERMO PLASTIC ☐ FLUORO POLYMER ☐ OTHER

ANNULAR SEAL: ☐ CEMENT SLURRY ☑ BENTONITE SLURRY ☐ NON SLURRY BENTONITE TYPE: ☐ CEMENT/BENTONITE SLURRY BAGS OF CEMENT USED ___ % BENTONITE USED ___ WATER USED/BAG ___ GAL.
BENTONITE SEAL: MATERIAL BENTONITE ☐ SLURRY ☑ CHIPS ☐ GRANULAR ☐ PELLETS LENGTH OF SEAL 3 BENTONITE SEAL INSTALLED IN ☑ UNSATURATED ZONE ☐ SATURATED ZONE

PRIMARY FILTER PACK: TYPE ☐ SAND ☐ MANUFACTURED ☐ NATURAL GRAIN SIZE 20/40 LENGTH OF FILTER PACK 37 FT. METHOD OF INSTALLATION Tremie

SECONDARY FILTER PACK: TYPE ☐ SAND ☐ MANUFACTURED ☑ NONE GRAIN SIZE — LENGTH OF FILTER PACK — FT. METHOD OF INSTALLATION —

WELL SCREEN: LENGTH OF SCREEN 35 FT. DIAMETER 1 IN. SLOT SIZE 10 WEIGHT OR SDR # 80 MATERIAL ☑ PLASTIC ☐ STEEL ☐ FLUORO POLYMER

SUMP DETAILS: LENGTH OF SUMP N/A DIAMETER OF SUMP — MATERIAL ☐ PVC ☐ STEEL ☐ FLUORO POLYMER ☐ OTHER

BACK FILL: WAS THE WELL BACK FILLED? ☐ YES ☑ NO MATERIAL USED — LENGTH OF BACK FILLED BORE HOLE —

STATIC WATER LEVEL 24 FEET FROM MEASURING POINT
DATE OF STATIC WATER LEVEL 11-4-97
MEASURING POINT FOR STATIC WATER LEVEL IS ☐ TOP OF RISER PIPE ☑ OTHER Ground
ELEVATION OF MEASURING POINT ≈478

MULTIPLE CASED WELLS: SUBMIT ADDITIONAL AS BUILT DIAGRAM SHOWING WELL CONSTRUCTION DETAILS INCLUDING TYPE AND SIZE OF ALL CASING, HOLE DIAMETERS, AND GROUT USED.
DRILLING EQUIPMENT ☑ AIR ROTARY ☐ AUGER TYPE ☐ REVERSE ROTARY ☐ OTHER

Information in this column to be supplied in the Feet from Surface column	FEET FROM SURFACE	FORMATION DESCRIPTION
Depth to bottom of Protective Casing Seal:	2.5	0-25 Clay
Depth to Base of Annular Seal:	2.5	25-42 Limestone
Depth to Base of Bentonite Seal:	2.5	
Depth to Top of Primary Filter Pack:	5.5	
Depth to Top of the Screen:	7.5	
Depth to Bottom of the Screen:	42.5	
Total Depth:	42.5	
DATE WELL DRILLING WAS COMPLETED	11-4-97	

I HEREBY CERTIFY THAT THE MONITORING WELL HEREIN DESCRIBED WAS CONSTRUCTED IN ACCORDANCE WITH THE DEPARTMENT OF NATURAL RESOURCES REQUIREMENTS FOR THE CONSTRUCTION OF MONITORING WELLS.

SIGNATURE PRIMARY CONTRACTOR/PERMIT # [illegible] DATE 11/23/98 SIGNATURE DRILLER/PERMIT # [illegible] DATE 1-22-98

MO 780-1415 (7-95) DISTRIBUTION: WHITE/DIVISION CANARY/MONITORING WELL CONTRACTOR PINK/OWNER
MAIL WHITE COPY TO: DEPARTMENT OF NATURAL RESOURCES, P.O. BOX 250, ROLLA, MO 65402
ENCLOSE $35 PER MONITORING WELL FOR THE CERTIFICATION FEE (RETURN ENVELOPE ENCLOSED)

GMP-2
As Built Diagram

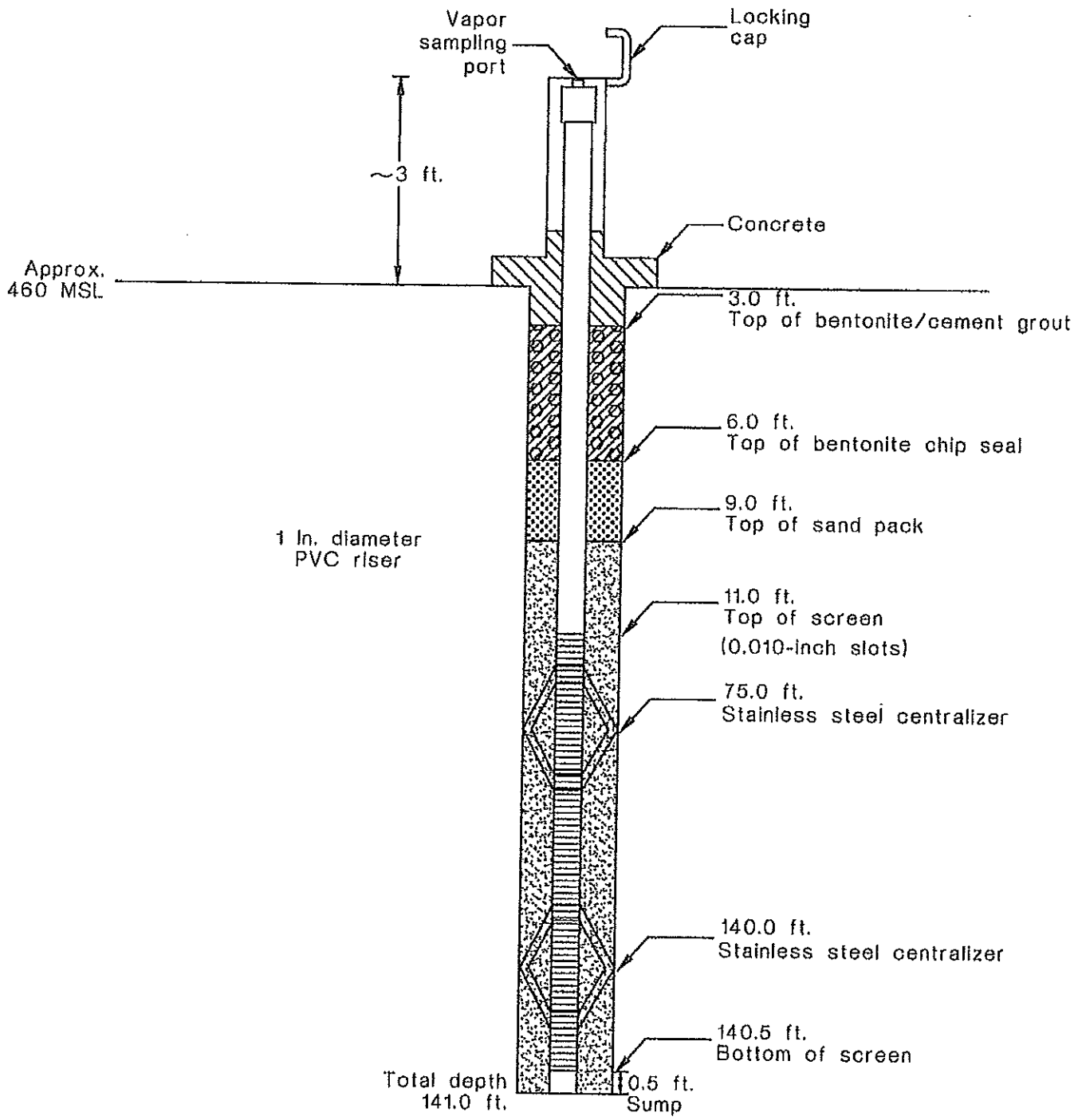

(Not to Scale)

All depths relative to ground surface

2206S-BL
GMP
GMP-2

GMP-02

MISSOURI DEPARTMENT OF NATURAL RESOURCES
DIVISION OF GEOLOGY AND LAND SURVEY

MONITORING WELL CERTIFICATION RECORD

OFFICE USE ONLY	DATE RECEIVED
REF. NO. 162335	
O.R. NO.	CHECK NO.
STATE WELL NUMBER	TRANSMITTAL NO.
CHECKED BY	ROUTE
APPROVED BY	ENTERED Ph 1 Ph 2 Ph 3

INFORMATION SUPPLIED BY MONITORING WELL CONTRACTOR

SITE/FACILITY NAME: Bridgeton Landfill Authority
WELL NUMBER: GMP-2
SITE ADDRESS: 13570 St. Charles Rock Rd
CITY: Bridgeton
STATE: MO
ZIP CODE: 63042
OWNER NAME: Same
TELEPHONE: 314 739-1919
OWNER ADDRESS:
CITY:
STATE:
ZIP CODE:

VARIANCE ISSUED: ☐ YES ☐ NO
DATE ISSUED: 10-23-97
VARIANCE NUMBER: V833

DESCRIBE LOCATION OF THE WELL SO WE WOULD BE ABLE TO VISIT IT:
Old St Charles Rock Road at South end of Landfill through rear gate. And 200'±

LOCATION OF WELL
SHOW LOCATION IN SECTION PLAT
COUNTY: St Louis
SURFACE ELEVATION: ±416
SMALLEST ¼ ___ ¼ ___ ¼ ___ ¼ LARGEST ¼
SEC. ___ TWN. ___ N,RNG. ___ E OR W
LAT. 92 . 26 34 . LONG 38 . 46 . 12 .

MONITORING WELL INSTALLATION CONTRACTOR'S NAME: Layne-Western
PERMIT NUMBER: 001261 WPM
DRILLING CONTRACTOR'S NAME: Layne-Western
PERMIT NUMBER: 001261 WPM

WELL CONSTRUCTION INFORMATION

TYPE OF WELL: ☐ MONITORING WELL ☐ PIEZOMETER ☐ OTHER Gas Probe
TYPE OF POTENTIAL SITE: ☐ HAZARDOUS MATERIAL ☑ LANDFILL ☐ OTHER ☐ L.U.S.T.
MONITORING FOR: (CHECK ALL THAT APPLY) ☐ V.O.C. ☐ METALS ☐ PETROLEUM PRODUCT ☐ OTHER Gas ONLY

PROTECTIVE CASING DETAILS (IF USED): LENGTH 5 FT. DIAMETER OF CASING 6 IN. WEIGHT OR SDR # 40 DIAMETER AND DEPTH OF DRILL HOLE 8.5 IN. 5.5 FT. JOINTS ☐ THREADED ☐ MECHANICAL ☑ WELDED ☐ OTHER MATERIAL ☐ THERMO PLASTIC ☐ STEEL ☐ FLUORO POLYMER TYPE LOCKING CAP? ☐ YES ☐ NO

CAP VENTED ☐ YES ☑ NO
WEEP HOLE? ☐ YES ☐ NO
CASING GROUT DETAILS: MATERIAL ☐ CEMENT ☐ CONCRETE ☐ OTHER
DEPTH FROM THE SURFACE TO THE BOTTOM OF THE CASING GROUT SEAL: 3 FT.
TYPE OF SURFACE COMPLETION: ☐ ABOVE GROUND ☐ FLUSH MOUNT
DESCRIBE HOW THE FLUSH MOUNT WAS CONSTRUCTED: N/A

CENTRALIZER USED ON RISER ☐ NO ☐ YES LOCATED AT 75' : 140'
MATERIAL ☐ STAINLESS STEEL ☐ OTHER

RISER PIPE DETAILS: LENGTH 12 FT. DIAMETER OF RISER PIPE 1 IN. WEIGHT OR SDR # 80 DIAMETER OF DRILL HOLE 6 IN. JOINTS ☐ THREADED ☐ MECHANICAL ☐ WELDED ☐ OTHER MATERIAL ☐ THERMO PLASTIC ☐ STEEL ☐ FLUORO POLYMER ☐ OTHER

ANNULAR SEAL: ☐ CEMENT SLURRY ☑ BENTONITE SLURRY ☐ NON SLURRY BENTONITE TYPE: ☐ CEMENT/BENTONITE SLURRY BAGS OF CEMENT USED ___ % BENTONITE USED ___ WATER USED/BAG ___ GAL.
BENTONITE SEAL: MATERIAL BENTONITE ☐ SLURRY ☑ CHIPS ☐ GRANULAR ☐ PELLETS LENGTH OF SEAL 3 BENTONITE SEAL INSTALLED IN ☐ UNSATURATED ZONE ☐ SATURATED ZONE

PRIMARY FILTER PACK: TYPE ☐ SAND ☐ MANUFACTURED ☐ NATURAL GRAIN SIZE 20/40 LENGTH OF FILTER PACK 132 FT. METHOD OF INSTALLATION Tremie

SECONDARY FILTER PACK: TYPE ☐ SAND ☐ MANUFACTURED ☑ NONE GRAIN SIZE — LENGTH OF FILTER PACK — FT. METHOD OF INSTALLATION —

WELL SCREEN: LENGTH OF SCREEN 130 FT. DIAMETER 1 IN. SLOT SIZE 10 WEIGHT OR SDR # 80 MATERIAL ☐ PLASTIC ☐ STEEL ☐ FLUORO POLYMER

SUMP DETAILS: LENGTH OF SUMP N/A DIAMETER OF SUMP — MATERIAL ☐ PVC ☐ STEEL ☐ FLUORO POLYMER ☐ OTHER

BACK FILL: WAS THE WELL BACK FILLED? ☐ YES ☑ NO MATERIAL USED — LENGTH OF BACK FILLED BORE HOLE —

STATIC WATER LEVEL 60 FEET FROM MEASURING POINT
DATE OF STATIC WATER LEVEL 11-5-97
MEASURING POINT FOR STATIC WATER LEVEL IS ☐ TOP OF RISER PIPE ☑ OTHER Ground
ELEVATION OF MEASURING POINT ±416
MULTIPLE CASED WELLS: SUBMIT ADDITIONAL AS BUILT DIAGRAM SHOWING WELL CONSTRUCTION DETAILS INCLUDING TYPE AND SIZE OF ALL CASING, HOLE DIAMETERS, AND GROUT USED.
DRILLING EQUIPMENT: ☑ AIR ROTARY ☐ AUGER TYPE ☐ REVERSE ROTARY ☐ OTHER

	FEET FROM SURFACE	FORMATION DESCRIPTION
Information in this column to be supplied in the Feet from Surface column		
Depth to bottom of Protective Casing Seal:	3	0-13 Clay
Depth to Base of Annular Seal:	6	3-141 Ls/Shale
Depth to Base of Bentonite Seal:	9	with Chert
Depth to Top of Primary Filter Pack:	9	
Depth to Top of the Screen:	11	
Depth to Bottom of the Screen:	141	
Total Depth:	141	
DATE WELL DRILLING WAS COMPLETED	11-3-97	

I HEREBY CERTIFY THAT THE MONITORING WELL HEREIN DESCRIBED WAS CONSTRUCTED IN ACCORDANCE WITH THE DEPARTMENT OF NATURAL RESOURCES REQUIREMENTS FOR THE CONSTRUCTION OF MONITORING WELLS.

SIGNATURE PRIMARY CONTRACTOR/PERMIT # 0221141M DATE 11/23/98 SIGNATURE DRILLER/PERMIT # Craig Stanley DATE 11-3-97

MO 780-1415 (7-95)
DISTRIBUTION: WHITE/DIVISION CANARY/MONITORING WELL CONTRACTOR PINK/OWNER
MAIL WHITE COPY TO: DEPARTMENT OF NATURAL RESOURCES, P.O. BOX 250, ROLLA, MO 65402
ENCLOSE $35 PER MONITORING WELL FOR THE CERTIFICATION FEE WITHIN 60 DAYS AFTER WELL COMPLETION

GMP-3
As Built Diagram

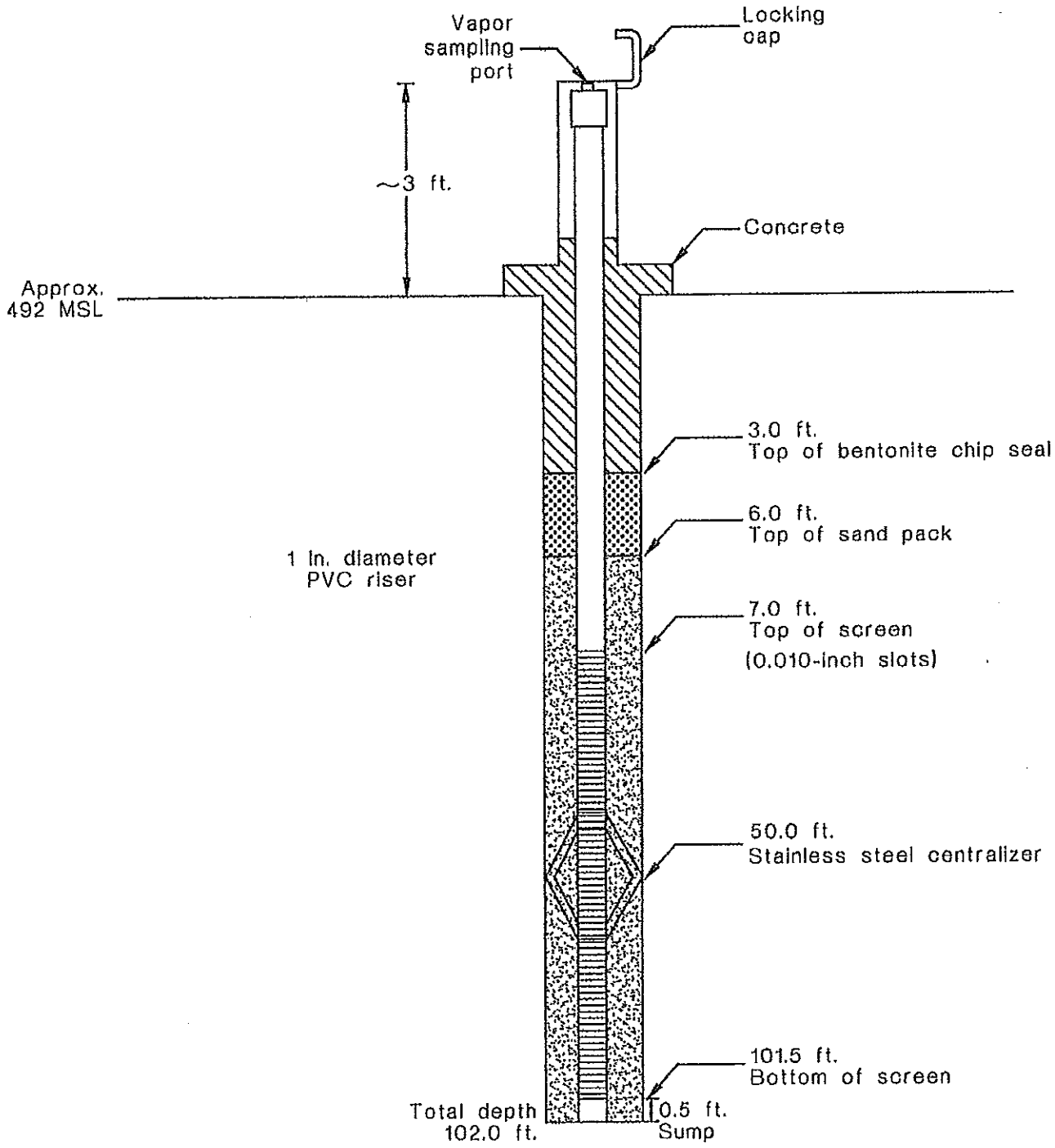

(Not to Scale)

All depths relative to ground surface

2206S-BL
GMP
GMP-3

GMP-03

MISSOURI DEPARTMENT OF NATURAL RESOURCES
DIVISION OF GEOLOGY AND LAND SURVEY

MONITORING WELL CERTIFICATION RECORD

OFFICE USE ONLY	DATE RECEIVED
REF. NO. 145157	
C.R. NO.	CHECK NO.
STATE WELL NUMBER	TRANSMITTAL NO.
CHECKED BY	ROUTE
APPROVED BY	ENTERED Ph 1 Ph 2 Ph 3

INFORMATION SUPPLIED BY MONITORING WELL CONTRACTOR

SITE/FACILITY NAME: Bridgeton Landfill Authority
WELL NUMBER: GMP-3

SITE ADDRESS: 13570 St. Charles Rock Rd. | CITY: Bridgeton | STATE: MO | ZIP CODE: 63042

OWNER NAME: Same | TELEPHONE: 314 739 1919

OWNER ADDRESS: | CITY: | STATE: | ZIP CODE:

VARIANCE ISSUED: ☑ YES ☐ NO | DATE ISSUED: 10-23-97 | VARIANCE NUMBER: V 833

DESCRIBE LOCATION OF THE WELL SO WE WOULD BE ABLE TO VISIT IT: Southeast Corner of the Landfill off Old St. Charles Rock Road

LOCATION OF WELL SHOW LOCATION IN SECTION PLAT | COUNTY: St. Louis | SURFACE ELEVATION: ± 478

SMALLEST ¼ ___ ¼ ___ ¼ ___ ¼ LARGEST ¼

SEC. ___ TWN. ___ N.RNG. ___ E OR W

LAT. 92. 26. 34. LONG. 38. 46. 12.

MONITORING WELL INSTALLATION CONTRACTOR'S NAME: Layne-Western | PERMIT NUMBER: 001261 WPM

DRILLING CONTRACTOR'S NAME: Layne-Western | PERMIT NUMBER: 001261 WPM

WELL CONSTRUCTION INFORMATION

TYPE OF WELL: ☐ MONITORING WELL ☐ PIEZOMETER ☑ OTHER Gas Probe

TYPE OF POTENTIAL SITE: ☐ HAZARDOUS MATERIAL ☑ LANDFILL ☐ OTHER ☐ L.U.S.T.

MONITORING FOR (CHECK ALL THAT APPLY): ☐ V.O.C. ☐ METALS ☐ PETROLEUM PRODUCT ☑ OTHER GAS ONLY

PROTECTIVE CASING DETAILS (IF USED): LENGTH 5 FT. | DIAMETER OF CASING 6 IN. | WEIGHT OR SDR # 40 | DIAMETER AND DEPTH OF DRILL HOLE 2.5 x 2 IN FT. | JOINTS ☐ THREADED ☐ MECHANICAL ☑ WELDED ☐ OTHER | MATERIAL ☐ THERMO PLASTIC ☑ STEEL ☐ FLUORO POLYMER TYPE | LOCKING CAP? ☑ YES ☐ NO

CAP VENTED ☐ YES ☑ NO | WEEP HOLE? ☑ YES ☐ NO

CASING GROUT DETAILS: MATERIAL ☐ CEMENT ☑ CONCRETE ☐ OTHER | DEPTH FROM THE SURFACE TO THE BOTTOM OF THE CASING GROUT SEAL 3 FT. | TYPE OF SURFACE COMPLETION ☑ ABOVE GROUND ☐ FLUSH MOUNT | DESCRIBE HOW THE FLUSH MOUNT WAS CONSTRUCTED: N/A

CENTRALIZER USED ON RISER ☐ NO ☑ YES LOCATED AT ± 50' | MATERIAL ☑ STAINLESS STEEL ☐ OTHER

RISER PIPE DETAILS: LENGTH 9½ 12 FT. | DIAMETER OF RISER PIPE 1 IN. | WEIGHT OR SDR # 80 | DIAMETER OF DRILL HOLE 6 IN. | JOINTS ☑ THREADED ☐ MECHANICAL ☐ WELDED ☐ OTHER | MATERIAL ☐ THERMO PLASTIC ☐ STEEL ☐ FLUORO POLYMER ☐ OTHER

ANNULAR SEAL: ☐ CEMENT SLURRY ☑ BENTONITE SLURRY ☐ NON SLURRY BENTONITE TYPE: ☐ CEMENT/BENTONITE SLURRY BAGS OF CEMENT USED ___ % BENTONITE USED ___ WATER USED/BAG ___ GAL.

BENTONITE SEAL: MATERIAL BENTONITE ☐ SLURRY ☑ CHIPS ☐ GRANULAR ☐ PELLETS | LENGTH OF SEAL 3 | BENTONITE SEAL INSTALLED IN ☑ UNSATURATED ZONE ☐ SATURATED ZONE

PRIMARY FILTER PACK: TYPE ☑ SAND ☐ MANUFACTURED ☐ NATURAL | GRAIN SIZE 2/40 | LENGTH OF FILTER PACK 96 FT. | METHOD OF INSTALLATION Tremie

SECONDARY FILTER PACK: TYPE ☐ SAND ☐ MANUFACTURED ☑ NONE | GRAIN SIZE — | LENGTH OF FILTER PACK — FT. | METHOD OF INSTALLATION —

WELL SCREEN: LENGTH OF SCREEN 95 FT. | DIAMETER 1 IN. | SLOT SIZE 10 | WEIGHT OR SDR # 80 | MATERIAL ☑ PLASTIC ☐ STEEL ☐ FLUORO POLYMER

SUMP DETAILS: LENGTH OF SUMP N/A | DIAMETER OF SUMP | MATERIAL ☐ PVC ☐ STEEL ☐ FLUORO POLYMER ☐ OTHER

BACK FILL: WAS THE WELL BACK FILLED? ☐ YES ☑ NO | MATERIAL USED — | LENGTH OF BACK FILLED BORE HOLE —

STATIC WATER LEVEL 33 FEET FROM MEASURING POINT | DATE OF STATIC WATER LEVEL 11/10/97

MEASURING POINT FOR STATIC WATER LEVEL IS: ☐ TOP OF RISER PIPE ☑ OTHER Ground | ELEVATION OF MEASURING POINT N/A

MULTIPLE CASED WELLS: SUBMIT ADDITIONAL AS BUILT DIAGRAM SHOWING WELL CONSTRUCTION DETAILS INCLUDING TYPE AND SIZE OF ALL CASING, HOLE DIAMETERS, AND GROUT USED.

DRILLING EQUIPMENT: ☑ AIR ROTARY ☐ AUGER TYPE ☐ REVERSE ROTARY ☐ OTHER

	FEET FROM SURFACE	FORMATION DESCRIPTION
Depth to bottom of Protective Casing Seal	3	0-35 Clay w/sand
Depth to Base of Annular Seal	3	35-42 Ls/shale
Depth to Base of Bentonite Seal	6	with Chert
Depth to Top of Primary Filter Pack	6	
Depth to Top of the Screen	7	
Depth to Bottom of the Screen	102	
Total Depth	102	
DATE WELL DRILLING WAS COMPLETED	11/10/97	

I HEREBY CERTIFY THAT THE MONITORING WELL HEREIN DESCRIBED WAS CONSTRUCTED IN ACCORDANCE WITH THE DEPARTMENT OF NATURAL RESOURCES REQUIREMENTS FOR THE CONSTRUCTION OF MONITORING WELLS.

SIGNATURE PRIMARY CONTRACTOR/PERMIT # [illegible] 001261 WPM | DATE 1/23/98 | SIGNATURE DRILLER/PERMIT # Craig Skowlen | DATE 1-22-98

MO 780-1415 (7-95)

DISTRIBUTION: WHITE/DIVISION CANARY/MONITORING WELL CONTRACTOR PINK/OWNER
MAIL WHITE COPY TO: DEPARTMENT OF NATURAL RESOURCES, P.O. BOX 250, ROLLA, MO 65402
ENCLOSE $35 PER MONITORING WELL FOR THE CERTIFICATION FEE WITHIN 60 DAYS AFTER WELL COMPLETION

RECYCLED PAPER

GMP-4S AND GMP-4D

AQUATERRA
Environmental Solutions, Inc.

13 Executive Dr. Suite 1 Fairview Heights IL 62208

LOG OF BORING NO: **GMP-4**

SHEET NUMBER 1 of 2

CLIENT:	Republic Services, Inc.
PROJECT NAME:	Bridgeton Landfill
PROJECT NUMBER:	4788.10
PROJECT LOCATION:	Maryland Heights, MO
BORING LOCATION:	N: 1066895 E: 515160
AES PROJECT NO:	4788.10
AES GEOLOGIST:	T.Pool, C. Joyce
START DATE	08/31/12 FINISH DATE 09/04/12
START TIME	FINISH TIME

DRILLING CONTRACTOR:	Roberts Environmental Drilling
DRILLER:	Patrick
DRILLING RIG:	Track Mounted CME-75
DRILLING METHOD:	8" ID HSA, 8" Air Rorary
SAMPLING METHOD:	Split Spoon, Cuttings
BORING DIAMETER:	10"/6"
WELL DIAMETER:	2x2"
WELL COMPLETION:	Stick-Up
SURFACE ELEVATION	484.2
TOC ELEVATION:	S-487.2'; D-487.21'
WATER LEVEL:	-
WATER ELEVATION:	-
DATE:	-

WELL CONSTRUCTION DETAILS		
MATERIAL:	PVC	PVC
CASING DIAMETER:	2"	2"
WELL TOTAL DEPTH:	70'	43'
SCREEN LENGTH:	20	35'
RISER LENGTH:	53	15'
TOP OF SCREEN:	49	7.6'
BOTTOM OF SCREEN:	69'	42.8'
SCREEN SLOT:	0.010 IN	0.010 IN
TOP OF FILTER PACK:	45	6'
TOP OF SEAL:	43	3'
TYPE OF SEAL:	3/8" Bentonite Chips	→
TYPE OF FILTER PACK:	12/20 Sand	GMP-4D / GMP-4S

SAMPLE NUMBER	SAMPLE TYPE	BLOW COUNT	RECOVERY (FT)	DEPTH IN FEET	USCS CLASS	SOIL DESCRIPTION AND DRILLING CONDITIONS
HSA-1				2, 4	SC	Top 2" roots and vegetation Medium brown (5yr4/4), fine SAND with lean CLAY, moist
SS-1	SS		2.0	6	SC	
HSA-2	CU			8	SC	Moderate brown (2yr3/4) very fine clayey SAND, moist
SS-2	SS		2.0	10, 12	SC	
HSA-3	CU			14	CL	Moderate brown (5yr4/4) fine sandy CLAY, moist
SS-3	SS		2.0	16	CL	
HSA-4	CU			18	CL	Color grades to dark yellow brown, slightly coarser (10yr5/4)
SS-4	SS		2.0	20, 22	CL	Moderate yellow bronw (10yr5/4) fine sandy lean CLAY, moist
HSA-5	CU			24	CL	Color grades to pale Brown (5yr5/2)
SS-5	SS		2.0	26	SC	Grayish red (10yr4/2) clayey fine SAND, wet
HSA-6	CU			28	SC	
SS-6	SS		2.0	30, 32	SC	Light olive gray (5y5/2)
HSA-7	CU			34	SC	
HSA-8	CU			36, 38, 40	SC	Saturated so no samples taken

NOTES AND WELL CONSTRUCTION

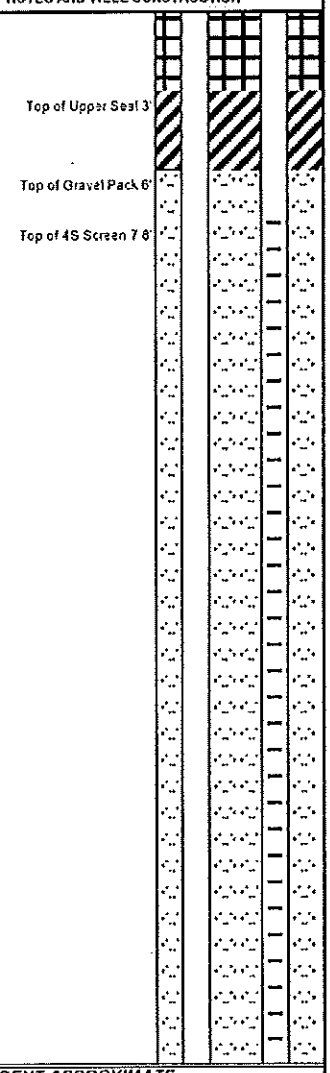

LEGEND:

SS - Split Spoon	*PID - Photoionization Detector*
CU -Cuttings Sample	*PP - Pocket Penetrometer*
ST - Shelby Tube	*HSA - Hollow Stem Augers*
	AR - Air Rotary
HA - Hand Auger	
WB - Wash Bore	
RB - Rock Bit	
NX - Rock Core	

THE STRATIFICATION LINES REPRESENT APPROXIMATE BOUNDARY LINES BETWEEN SOIL AND ROCK TYPES: IN-SITU, THE TRANSITION MAY BE GRADUAL.

GMP-4S AND
GMP-4D

AQUATERRA
Environmental Solutions, Inc.
13 Executive Dr. Suite 1 Fairview Heights IL 62208

LOG OF BORING NO	**GMP-4**
SHEET NUMBER	2 of 2
GEOLOGIST:	T.Pool, C. Joyce
DATE:	08/31/12
PROJECT NUMBER	4788.1
CLIENT:	Republic Services, Inc.
PROJECT NAME:	Bridgeton Landfill

SAMPLE NUMBER	SAMPLE TYPE	BLOW COUNT	RECOVERY (FT)	DEPTH IN FEET	USCS CLASS	SOIL DESCRIPTION AND DRILLING CONDITIONS	NOTES:
HSA-9	CU			42, 44	SC		Bottom of 4S Screen 42.8'; Top of Lower Seal 43'
AR	CU			46, 48, 50, 52, 54, 56, 58, 60, 62, 64, 66, 68, 70	SH	Bedrock @45 Very dark red (SR2.5) clayey SHALE, dry Light black in gray mottles (5b7/1) Red brown SHALE, wet Band of gray shale, wet Red brown SHALE, wet	Top of Gravel Pack 45'; Top of 4D Screen 49'; Bottom of 4D Screen 69'
				72, 74, 76, 78, 80, 82, 84, 86, 88, 90		Boring Terminated @ 70.0'	

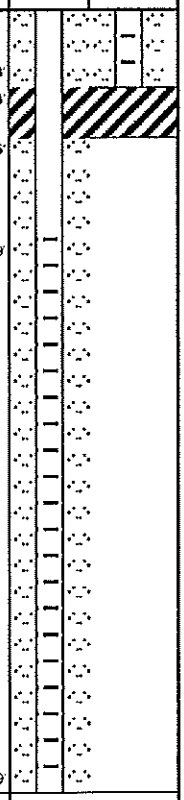

LEGEND:
SS - Split Spoon
CS - 5 foot CME Sampler
ST - Shelby Tube
PID - Photoionization Detector
PP - Pocket Penetrometer
HSA - Hollow Stem Augers
AR - Air Rotary
HA - Hand Auger
WB - Wash Bore
RB - Rock Bit
NX - Rock Core

THE STRATIFICATION LINES REPRESENT APPROXIMATE BOUNDARY LINES BETWEEN SOIL AND ROCK TYPES: IN-SITU, THE TRANSITION MAY BE GRADUAL.

GMP-5S AND GMP-5D

AQUATERRA
Environmental Solutions, Inc.

13 Executive Dr. Suite 1 Fairview Heights IL 62208

LOG OF BORING NO.: **GMP-5**

SHEET NUMBER 1 of 2

CLIENT:	Republic Services, Inc.
PROJECT NAME:	Bridgeton Landfill
PROJECT NUMBER:	4788.10
PROJECT LOCATION:	Maryland Heights, MO
BORING LOCATION:	N: 1067135 E: 517115
AES PROJECT NO.	4788.10
AES GEOLOGIST:	T.Pool
START DATE	09/05/12 FINISH DATE 09/06/12
START TIME	FINISH TIME

DRILLING CONTRACTOR:	Roberts Environmental Drilling
DRILLER:	Patrick
DRILLING RIG:	Track Mounted CME-75
DRILLING METHOD:	8" ID HSA, 6" Air Rorary
SAMPLING METHOD:	Split Spoon, Cuttings
BORING DIAMETER:	10"/6"
WELL DIAMETER:	2x2"
WELL COMPLETION:	Stick-Up
SURFACE ELEVATION:	486.2
TOC ELEVATION:	S-489; D-489.01
WATER LEVEL:	-
WATER ELEVATION:	-
DATE:	-

WELL CONSTRUCTION DETAILS		
MATERIAL:	PVC	PVC
CASING DIAMETER:	2"	2"
WELL TOTAL DEPTH:	32'	45'
SCREEN LENGTH:	33'	35'
RISER LENGTH:	54.5'	13.5'
TOP OF SCREEN:	51.5'	10.5'
BOTTOM OF SCREEN:	71.5'	45.5'
SCREEN SLOT:	0.010 IN	0.010 IN
TOP OF FILTER PACK:	45'	9.5'
TOP OF SEAL:	46'	3'
TYPE OF SEAL:	3/8" Bentonite Chips	→
TYPE OF FILTER PACK:	12/20 Sand GMP-5D	GMP-5S

SAMPLE NUMBER	SAMPLE TYPE	BLOW COUNT	RECOVERY (FT)	DEPTH IN FEET	USCS CLASS	SOIL DESCRIPTION AND DRILLING CONDITIONS
HSA-1				2, 4	CL	Gravel and brown silty CLAY, dry
					ML	Brown clayey SILT, dry
SS-1	SS		2.0	6	CL	Brown silty CLAY, dry
HSA-2	CU			8		
SS-2	SS		2.0	10		Brown silty CLAY, dry
HSA-3	CU			12, 14		
SS-3	SS		0.0	16		Tan to light gray silty CLAY, moist
HSA-4	CU			18		
SS-4	SS		2.0	20		Tan to light gray silty CLAY, wet
HSA-5	CU			22, 24		
SS-5	SS		2.0	26		Dark grey silty CLAY, wet
HSA-6	CU			28		
SS-6	SS		2.0	30	SM	Gray silty fine SAND with clay horizons, saturated
HSA-7	CU			32, 34		
HSA-8	CU			36, 38, 40	ML	Gray, sandy, clayey SILT, wet

NOTES AND WELL CONSTRUCTION

Top of Upper Seal 3'

Top of Gravel Pack 9.8'

Top of SS Screen 10.8'

LEGEND:

SS - Split Spoon
CU - Cuttings Sample
ST - Shelby Tube
PID - Photoionization Detector
PP - Pocket Penetrometer
HSA - Hollow Stem Augers
AR - Air Rotary
HA - Hand Auger
WB - Wash Bore
RB - Rock Bit
NX - Rock Core

THE STRATIFICATION LINES REPRESENT APPROXIMATE BOUNDARY LINES BETWEEN SOIL AND ROCK TYPES: IN-SITU, THE TRANSITION MAY BE GRADUAL.

GMP-5S AND GMP-5D

AQUATERRA

Environmental Solutions, Inc.

13 Executive Dr. Suite 1 Fairview Heights IL 62208

LOG OF BORING NO.:	GMP-5
SHEET NUMBER	2 of 2
GEOLOGIST:	T.Pool
DATE:	09/05/12
PROJECT NUMBER:	4788.1
CLIENT:	Republic Services, Inc.
PROJECT NAME:	Bridgeton Landfill

SAMPLE NUMBER	SAMPLE TYPE	BLOW COUNT	RECOVERY (FT)	DEPTH IN FEET	USCS CLASS	SOIL DESCRIPTION AND DRILLING CONDITIONS	NOTES:
HSA-9	CU			42, 44	SP	Gray fine-medium SAND trace gravel, saturated	
				46		Gray fine-medium SAND with clay, saturated	Bottom of 5S Screen 45.8
				48	CL	Orange red silty CLAY with shale fragments, wet	Top of Lower Seal 46
				50	SH	Bit Refusal/ Bedrock @ 48'	Top of Gravel Pack 48'
						Orange brown SHALE, wet	
AR	CU			52, 54, 56, 58, 60, 62, 64, 66, 68, 70, 72, 74, 76, 78, 80, 82	LMS	Gray weathered LMS interbedded with orange brown shale, wet	Top of 5D Screen 51.8
						Competent LIMESTONE begins from cuttings	
						Gray LIMESTONE, dry	
						Gray LIMESTONE, wet	Bottom of 5D Screen 81.8'
				84, 86, 88, 90		Boring Terminated @ 82.0'	

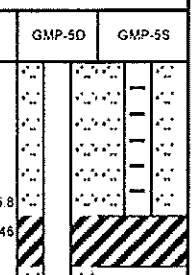

LEGEND:

SS - Split Spoon	PID - Photoionization Detecto	HA - Hand Auger
CS - 5 foot CME Sampler	PP - Pocket Penetrometer	WB - Wash Bore
ST - Shelby Tube	HSA - Hollow Stem Augers	RB - Rock Bit
	AR - Air Rotary	NX - Rock Core

THE STRATIFICATION LINES REPRESENT APPROXIMATE BOUNDARY LINES BETWEEN SOIL AND ROCK TYPES: IN-SITU, THE TRANSITION MAY BE GRADUAL.

GMP-6S AND GMP-6D

AQUATERRA
Environmental Solutions, Inc.

13 Executive Dr. Suite 1 Fairview Heights IL 62208

LOG OF BORING NO: **GMP-6**

SHEET NUMBER 1 of 2

CLIENT:	Republic Services, Inc.
PROJECT NAME:	Bridgeton Landfill
PROJECT NUMBER:	4788.10
PROJECT LOCATION:	Maryland Heights, MO
BORING LOCATION:	N: 1067308 E: 517573
AES PROJECT NO:	4788.10
AES GEOLOGIST:	T.Pool
START DATE	09/06/12 FINISH DATE 09/07/12
START TIME	FINISH TIME

DRILLING CONTRACTOR:	Roberts Environmental Drilling
DRILLER:	Patrick
DRILLING RIG:	Track Mounted CME-75
DRILLING METHOD:	8" ID HSA, 6" Air Rorary
SAMPLING METHOD:	Split Spoon, Cuttings
BORING DIAMETER:	10"/6"
WELL DIAMETER:	2x2"
WELL COMPLETION:	Stick-Up
SURFACE ELEVATION:	476.3
TOC ELEVATION:	S-478.867; D-478.94
WATER LEVEL:	-
WATER ELEVATION:	-
DATE:	-

WELL CONSTRUCTION DETAILS		
MATERIAL:	PVC	PVC
CASING DIAMETER:	2"	2"
WELL TOTAL DEPTH:	70'	26
SCREEN LENGTH:	40'	15'
RISER LENGTH:	32.7	13.6
TOP OF SCREEN:	29.8'	10.8'
BOTTOM OF SCREEN:	69.8'	25.8'
SCREEN SLOT:	0.010 IN	0.010 IN
TOP OF FILTER PACK:	28'	9'
TOP OF SEAL:	25'	3'
TYPE OF SEAL:	3.8" Bentonite Chips	→
TYPE OF FILTER PACK:	12/20 Sand GVP-6D	GVP-6S

SAMPLE NUMBER	SAMPLE TYPE	BLOW COUNT	RECOVERY (FT)	DEPTH IN FEET	USCS CLASS	SOIL DESCRIPTION AND DRILLING CONDITIONS
HSA-1				2, 4	ML	Grass on surface Brown clayey SILT, dry
SS-1	SS		2.0	6	CL	Brown silty CLAY, dry
HSA-2	CU			8, 10		
SS-2	SS		2.0	12	ML	Gray mottled brown clayey SILT, moist
HSA-3	CU			14		
SS-3	SS		0.0	16		Brown sandy clayey SILT, wet
HSA-4	CU			18, 20		
SS-4	SS		2.0	22	SM	Brown silty fine SAND, saturated
HSA-5	CU			24		
SS-5	SS		2.0	26	SP	Brown fine-medium SAND, saturated Gray CLAY, wet
HSA-6	CU			28		Bit refusal @ 28.0'
AR	CU			30, 32, 34, 36	LMS	Gray weathered Limestone with sand in cuttings,
				38, 40	CL	Gray CLAY, wet (Possible CLAY filled void)

NOTES AND WELL CONSTRUCTION

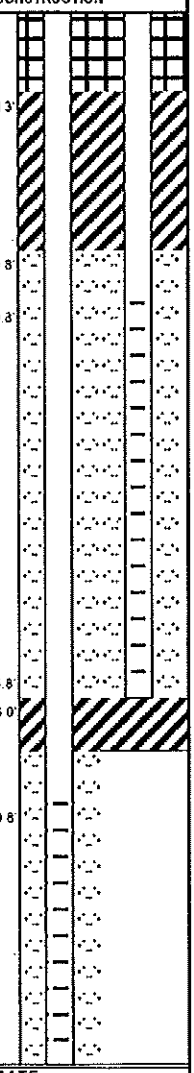

LEGEND:

SS - Split Spoon	*PID - Photoionization Detecto*	*HA - Hand Auger*	
CU -Cuttings Sample	*PP - Pocket Penetrometer*	*WB - Wash Bore*	
ST - Shelby Tube	*HSA - Hollow Stem Augers*	*RB - Rock Bit*	
	AR - Air Rotary	*NX - Rock Core*	

THE STRATIFICATION LINES REPRESENT APPROXIMATE BOUNDARY LINES BETWEEN SOIL AND ROCK TYPES: IN-SITU, THE TRANSITION MAY BE GRADUAL.

GMP-6S AND GMP-6D

AQUATERRA
Environmental Solutions, Inc.
13 Executive Dr. Suite 1 Fairview Heights IL 62208

LOG OF BORING NO: **GMP-6** SHEET NUMBER 2 of 2

GEOLOGIST: T.Pool
CLIENT: Republic Services, Inc.
DATE: 09/06/12
PROJECT NAME: Bridgeton Landfill
PROJECT NUMBER: 4788.1

SAMPLE NUMBER	SAMPLE TYPE	BLOW COUNT	RECOVERY (FT)	DEPTH IN FEET	USCS CLASS	SOIL DESCRIPTION AND DRILLING CONDITIONS	NOTES:	GMP-6D	GMP-6S
				42		Gray weathered LIMESTONE, sand in cuttings, Gray			
				44					
				46					
				48					
				50					
				52					
				54					
				56					
AR	CU			58	LMS				
				60		GMP-6S AND GMP-6D			
				62		GMP-6S AND GMP-6D			
				64					
				66					
				68					
				70			Bottom of 6D Screen 69.8		
				72			Boring fell in 6.0' before casing was installed		
				74					
				76		Boring Terminated @ 76.0'			
				78					
				80					
				82					
				84					
				86					
				88					
				90					

LEGEND:
SS - Split Spoon
CS - 5 foot CME Sampler
ST - Shelby Tube
PID - Photoionization Detecto
PP - Pocket Penetrometer
HSA - Hollow Stem Augers
AR - Air Rotary
HA - Hand Auger
WB - Wash Bore
RB - Rock Bit
NX - Rock Core

THE STRATIFICATION LINES REPRESENT APPROXIMATE BOUNDARY LINES BETWEEN SOIL AND ROCK TYPES: IN-SITU, THE TRANSITION MAY BE GRADUAL.

GMP-7S AND GMP-7D

AQUATERRA
Environmental Solutions, Inc.
13 Executive Dr. Suite 1 Fairview Heights IL 62208

LOG OF BORING NO: **GMP-7**

SHEET NUMBER 1 of 2

CLIENT:	Republic Services, Inc.
PROJECT NAME:	Bridgeton Landfill
PROJECT NUMBER:	4788.10
PROJECT LOCATION:	Maryland Heights, MO
BORING LOCATION:	N: 1068503 E: 517249
AES PROJECT NO:	4788.10
AES GEOLOGIST:	T.Pool
START DATE	09/12/12 FINISH DATE 09/12/12
START TIME	FINISH TIME

DRILLING CONTRACTOR:	Roberts Environmental Drilling
DRILLER:	Patrick
DRILLING RIG:	Track Mounted CME-75
DRILLING METHOD:	8" ID HSA, 6" Air Rorary
SAMPLING METHOD:	Split Spoon, Cuttings
BORING DIAMETER:	10"/6"
WELL DIAMETER:	2x2"
WELL COMPLETION:	Stick-Up
SURFACE ELEVATION:	480.7
TOC ELEVATION:	S-483.5; D-483.56
WATER LEVEL:	-
WATER ELEVATION:	-
DATE:	-

WELL CONSTRUCTION DETAILS

MATERIAL:	PVC	PVC
CASING DIAMETER:	2"	2"
WELL TOTAL DEPTH:	115'	32'
SCREEN LENGTH:	80'	25'
RISER LENGTH:	32.9'	9.8'
TOP OF SCREEN:	37.8'	6.8'
BOTTOM OF SCREEN:	117.8'	31.8'
SCREEN SLOT:	0.010 IN	0.010 IN
TOP OF FILTER PACK:	34'	5.8'
TOP OF SEAL:	32'	3'
TYPE OF SEAL:	3/8" Bentonite Chips	→
TYPE OF FILTER PACK:	12/20 Silica	GMP-7D / GMP-7S

SAMPLE NUMBER	SAMPLE TYPE	BLOW COUNT	RECOVERY (FT)	DEPTH IN FEET	USCS CLASS	SOIL DESCRIPTION AND DRILLING CONDITIONS
HSA-1				2, 4	CL	Grass on surface
SS-1	SS		2.0	6		Brown silty CLAY, dry
HSA-2	CU			8		
SS-2	SS		2.0	10	SP	Brown fine SAND, dry
HSA-3	CU			12, 14	ML	Brown clayey SILT, moist
SS-3	SS		2.0	16	CL	Brown silty CLAY, moist
HSA-4	CU			18		
SS-4	SS		2.0	20	ML	Light brown mottled gray clayey SILT, moist
HSA-5	CU			22, 24		
SS-5	SS		2.0	26		Gray clayey sandy SILT, moist
HSA-6	CU			28		
SS-6	SS		2.0	30	SM	Gray clayey silty SAND, wet
HSA-7	CU			32, 34	SP	Gray fine-medium SAND, saturated ROUGH DRILLING 33.0'-35.0'
AR	CU			36, 38, 40	LMS	Bit refusal/Bedrock at 34.5' Gray Weathered LIMESTONE with shale and sand, dry

NOTES AND WELL CONSTRUCTION

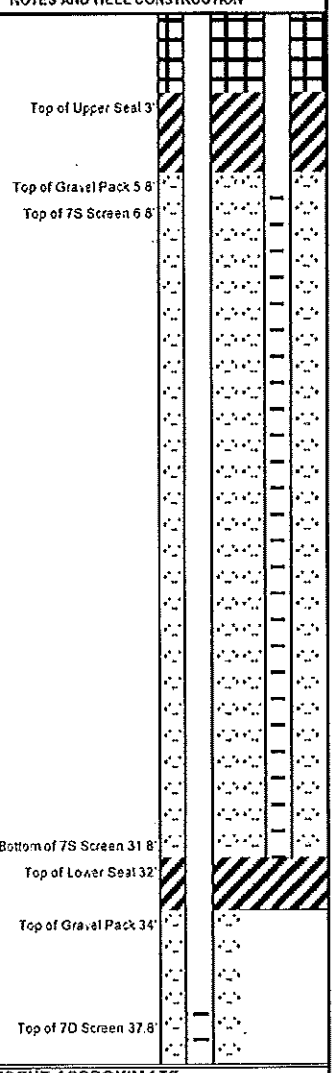

LEGEND:
SS - Split Spoon
CU -Cuttings Sample
ST - Shelby Tube
PID - Photoionization Detector
PP - Pocket Penetrometer
HSA - Hollow Stem Augers
AR - Air Rotary
HA - Hand Auger
WB - Wash Bore
RB - Rock Bit
NX - Rock Core

THE STRATIFICATION LINES REPRESENT APPROXIMATE BOUNDARY LINES BETWEEN SOIL AND ROCK TYPES: IN-SITU, THE TRANSITION MAY BE GRADUAL.

GMP-7S AND 7D

AQUATERRA
Environmental Solutions, Inc.
13 Executive Dr. Suite 1 Fairview Heights IL 62208

LOG OF BORING NO:	GMP-7	SHEET NUMBER	2 of 2
GEOLOGIST:	T.Pool		
CLIENT:	Republic Services, Inc.	DATE:	09/12/12
PROJECT NAME:	Bridgeton Landfill	PROJECT NUMBER:	4788.1

SAMPLE NUMBER	SAMPLE TYPE	BLOW COUNT	RECOVERY (FT)	DEPTH IN FEET	USCS CLASS	SOIL DESCRIPTION AND DRILLING CONDITIONS	NOTES:	GMP-7D	GMP-7S
						Gray Weathered LIMESTONE with shale and sand, dry			
				42		Limestone becomes saturated			
				44					
				46					
				48					
				50					
				52					
				54					
				56					
				58	LMS				
				60					
				62					
				64		Weathered Limestone ends, dry			
AR	CU			66					
				68					
				70		Gray LIMESTONE, dry			
				72					
				74					
				76					
				78					
				80					
				82					
				84					
				90		Gray LIMESTONE, wet till end of boring at 118'			
				100					
				118		Boring Terminated @ 118'	Bottom of 7D Screen 117.8'		

LEGEND:
SS - Split Spoon
CS - 5 foot CME Sampler
ST - Shelby Tube
PID - Photoionization Detector
PP - Pocket Penetrometer
HSA - Hollow Stem Augers
HA - Hand Auger
WB - Wash Bore
RB - Rock Bit
NX - Rock Core

THE STRATIFICATION LINES REPRESENT APPROXIMATE BOUNDARY LINES BETWEEN SOIL AND ROCK TYPES: IN-SITU, THE TRANSITION MAY BE GRADUAL.

GMP-8
As Built Diagram

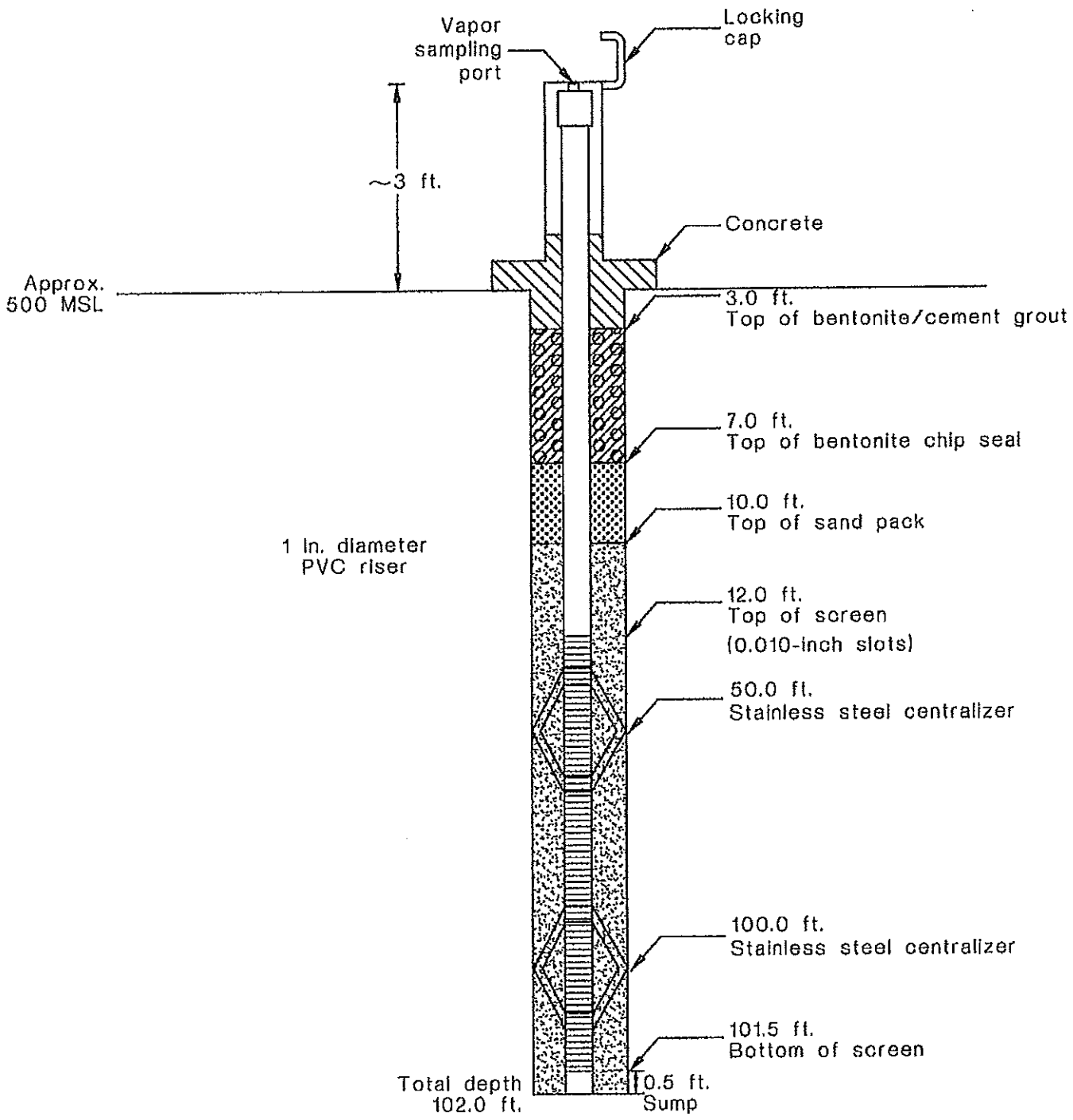

(Not to Scale)

All depths relative to ground surface

2206S-BL
GMP
GMP-8

GMP-08

MISSOURI DEPARTMENT OF NATURAL RESOURCES
DIVISION OF GEOLOGY AND LAND SURVEY

MONITORING WELL CERTIFICATION RECORD

OFFICE USE ONLY	DATE RECEIVED
REF. NO. 161716	
C.R. NO.	CHECK NO.
STATE WELL NUMBER	TRANSMITTAL NO.
CHECKED BY	ROUTE
APPROVED BY	ENTERED Ph 1 Ph 2 Ph 3

INFORMATION SUPPLIED BY MONITORING WELL CONTRACTOR

SITE/FACILITY NAME: Bridgeton Landfill Authority
WELL NUMBER: GMP-8

SITE ADDRESS: 13570 St. Charles Rock Rd
CITY: Bridgeton
STATE: Mo
ZIP CODE: 63042

OWNER NAME: Same
TELEPHONE: 314 737 1919

OWNER ADDRESS:
CITY:
STATE:
ZIP CODE:

VARIANCE ISSUED: ☑ YES ☐ NO
DATE ISSUED: 10-23-97
VARIANCE NUMBER: V 833

DESCRIBE LOCATION OF THE WELL SO WE WOULD BE ABLE TO VISIT IT:
The Northeast corner of the Landfill located on St. Charles Rock Rd & Tremont Rd

LOCATION OF WELL
SHOW LOCATION IN SECTION PLAT
COUNTY: St. Louis
SURFACE ELEVATION: 473
SMALLEST ¼ ___ ¼ ___ ¼ ___ ¼ LARGEST ¼
SEC. ___ TWN. ___ N.RNG. ___ E OR W
LAT. 38 . 36 . 34 . LONG. 90 . 46 . 12 .

MONITORING WELL INSTALLATION CONTRACTOR'S NAME: Layne Western — PERMIT NUMBER: 001261 WPM
DRILLING CONTRACTOR'S NAME: Layne Western — PERMIT NUMBER: 001261 WPM

WELL CONSTRUCTION INFORMATION

TYPE OF WELL: ☐ MONITORING WELL ☐ PIEZOMETER ☑ OTHER Gas probe
TYPE OF POTENTIAL SITE: ☐ HAZARDOUS MATERIAL ☑ LANDFILL ☐ OTHER ☐ L.U.S.T.
MONITORING FOR: (CHECK ALL THAT APPLY) ☐ V.O.C. ☐ METALS ☐ PETROLEUM PRODUCT ☐ OTHER Gas ONLY

PROTECTIVE CASING DETAILS (IF USED): LENGTH 5 FT. DIAMETER OF CASING 6 IN. WEIGHT OR SDR # 40 DIAMETER AND DEPTH OF DRILL HOLE 2.5 IN. FT. JOINTS ☐ THREADED ☐ MECHANICAL ☐ WELDED ☐ OTHER MATERIAL ☐ THERMO PLASTIC ☑ STEEL ☐ FLUORO POLYMER TYPE LOCKING CAP? ☑ YES ☐ NO

CAP VENTED ☐ YES ☑ NO
WEEP HOLE? ☑ YES ☐ NO
CASING GROUT DETAILS: MATERIAL ☐ CEMENT ☑ CONCRETE ☐ OTHER
DEPTH FROM THE SURFACE TO THE BOTTOM OF THE CASING GROUT SEAL: 3 FT.
TYPE OF SURFACE COMPLETION: ☐ ABOVE GROUND ☐ FLUSH MOUNT
DESCRIBE HOW THE FLUSH MOUNT WAS CONSTRUCTED: N/A

CENTRALIZER USED ON RISER: ☐ NO ☑ YES LOCATED AT 100 . 50
MATERIAL: ☑ STAINLESS STEEL ☐ OTHER

RISER PIPE DETAILS: LENGTH 14 FT. DIAMETER OF RISER PIPE 1 IN. WEIGHT OR SDR # 80 DIAMETER OF DRILL HOLE 6 IN. JOINTS ☑ THREADED ☐ MECHANICAL ☐ WELDED ☐ OTHER MATERIAL ☑ THERMO PLASTIC ☐ STEEL ☐ FLUORO POLYMER ☐ OTHER

ANNULAR SEAL: ☐ CEMENT SLURRY ☑ BENTONITE SLURRY ☐ NON SLURRY BENTONITE TYPE: ☐ CEMENT/BENTONITE SLURRY BAGS OF CEMENT USED ___ % BENTONITE USED ___ WATER USED/BAG ___ GAL.
BENTONITE SEAL: MATERIAL BENTONITE ☐ SLURRY ☑ CHIPS ☐ GRANULAR ☐ PELLETS
LENGTH OF SEAL: 3'
BENTONITE SEAL INSTALLED IN: ☑ UNSATURATED ZONE ☐ SATURATED ZONE

	TYPE	GRAIN SIZE	LENGTH OF FILTER PACK	METHOD OF INSTALLATION	Information in this column to be supplied in the Feet from Surface column	FEET FROM SURFACE	FORMATION DESCRIPTION
PRIMARY FILTER PACK	☑ SAND ☐ MANUFACTURED ☐ NATURAL	20/40	92 FT.	Tremie			
SECONDARY FILTER PACK	☐ SAND ☐ MANUFACTURED ☑ NONE	—	FT.		Depth to bottom of Protective Casing Seal:	3	0-10 Clay w/ sand
WELL SCREEN	LENGTH OF SCREEN 90 FT.	DIAMETER 1 IN.	SLOT SIZE 10	WEIGHT OR SDR # 80 MATERIAL ☑ PLASTIC ☐ STEEL ☐ FLUORO POLYMER	Depth to Base of Annular Seal:	7	40-102 Limestone
SUMP DETAILS	LENGTH OF SUMP N/A	DIAMETER OF SUMP —	MATERIAL ☐ PVC ☐ STEEL ☐ FLUORO POLYMER ☐ OTHER		Depth to Base of Bentonite Seal:	10	w/ Chips
BACK FILL	WAS THE WELL BACK FILLED? ☐ YES ☑ NO	MATERIAL USED —	LENGTH OF BACK FILLED BORE HOLE —		Depth to Top of Primary Filter Pack:	10	
					Depth to Top of the Screen:	12	
					Depth to Bottom of the Screen:	102	
					Total Depth:	102	

STATIC WATER LEVEL 20 FEET FROM MEASURING POINT
DATE OF STATIC WATER LEVEL 11-14-97
MEASURING POINT FOR STATIC WATER LEVEL IS ☐ TOP OF RISER PIPE ☑ OTHER Ground
ELEVATION OF MEASURING POINT 473

MULTIPLE CASED WELLS: SUBMIT ADDITIONAL AS BUILT DIAGRAM SHOWING WELL CONSTRUCTION DETAILS INCLUDING TYPE AND SIZE OF ALL CASING, HOLE DIAMETERS, AND GROUT USED.
DRILLING EQUIPMENT: ☑ AIR ROTARY ☐ AUGER TYPE ☐ REVERSE ROTARY ☐ OTHER
DATE WELL DRILLING WAS COMPLETED 10-21-97

I HEREBY CERTIFY THAT THE MONITORING WELL HEREIN DESCRIBED WAS CONSTRUCTED IN ACCORDANCE WITH THE DEPARTMENT OF NATURAL RESOURCES REQUIREMENTS FOR THE CONSTRUCTION OF MONITORING WELLS.

SIGNATURE PRIMARY CONTRACTOR/PERMIT # 001261 WPM — DATE 1/23/98
SIGNATURE DRILLER/TERMITE — DATE 11/22/98

MO 780-1415 (7-95)
DISTRIBUTION: WHITE/DIVISION CANARY/MONITORING WELL CONTRACTOR PINK/OWNER
MAIL WHITE COPY TO: DEPARTMENT OF NATURAL RESOURCES, P.O. BOX 250, ROLLA, MO 65402
ENCLOSE $35 PER MONITORING WELL FOR THE CERTIFICATION FEE WITHIN 60 DAYS AFTER WELL COMPLETION
RECYCLE PAPER

GMP-13S & GMP-13D

AQUATERRA
Environmental Solutions, Inc.
13 Executive Dr. Suite 1 Fairview Heights IL 62208

LOG OF BORING NO.: **GMP-13**

SHEET NUMBER 1 of 2

CLIENT:	Republic Services, Inc.
PROJECT NAME:	Bridgeton Landfill
PROJECT NUMBER:	4788.10
ROJECT LOCATION:	Maryland Heights, MO
BORING LOCATION:	N: 1066434 E: 516379
AES PROJECT NO:	4788.10
AES GEOLOGIST:	C. Joyce
START DATE	08/30/12 FINISH DATE 09/12/12
START TIME	FINISH TIME

DRILLING CONTRACTOR:	Roberts Environmental Drilling
DRILLER:	Patrick
DRILLING RIG:	Track Mounted CME-75
DRILLING METHOD:	8" HAS, 6" Air Rorary
SAMPLING METHOD:	Split Spoon, Cuttings
BORING DIAMETER:	8"/6"
WELL DIAMETER:	2x2"
WELL COMPLETION:	Stick-Up
SURFACE ELEVATION:	483.2
TOC ELEVATION:	S-485.981; D-486.027
WATER LEVEL:	-
WATER ELEVATION:	-
DATE:	-

WELL CONSTRUCTION DETAILS		
MATERIAL:	PVC	PVC
DIAMETER:	2"	2"
WELL TOTAL DEPTH:	69'	45'
SCREEN LENGTH:	20'	40'
RISER LENGTH:	52.9'	7.8'
TOP OF SCREEN:	48.9'	4.8'
BOTTOM OF SCREEN:	68.9'	44.8'
SCREEN SLOT:	0.010 IN	0.010 IN
TOP OF FILTER PACK:	45'	3.8'
TOP OF SEAL:	45'	2.8'
TYPE OF SEAL:	3-8' Bentonite Chips	
TYPE OF FILTER PACK:	12/20 Sand	GMP-13D / GMP-13S

SAMPLE NUMBER	SAMPLE TYPE	BLOW COUNT	RECOVERY (FT)	DEPTH IN FEET	USCS CLASS	SOIL DESCRIPTION AND DRILLING CONDITIONS
HSA-1				2, 4	SM	Top 1" Roots and Veg. Fine Clayey, SILT, Dark Reddish Brown (10yr3/4), moist
SS-1	SS		2.0	6	CL	Fine Sandy Fat CLAY, Mod Brown (5yr4/4), moist
HSA-2	CU			8, 10		
SS-2	SS		2.0	12		Fine sandy Fat CLAY, Mod Brown (syr4/4), moist
HSA-3	CU			14		
SS-3	SS		2.0	16	SM	Silty Sand, Light Olive Gray (5y5/2) moist-wet with iron oxide Staining light brown (5yr5/6) medium mottled pattern
HSA-4	CU			18, 20		
SS-4	SS		2.0	22	ML	Light brown mottled gray clayey SILT, moist
HSA-5	CU			24		Color grades to moderate yellow/brown (10yr5/4)
SS-5	SS		2.0	26		
HSA-6	CU			28, 30		
SS-6	SS		2.0	32		
HSA-7	CU			34		
HSA-8	CU			36	GC	Clayey GRAVEL, Anugular to sub angular, dark yellow-orange, wet
				38, 40	SM	Clayey Silty SAND, Fine and Medium grained, Dark Yellow Brown (10yr4/2)

NOTES AND WELL CONSTRUCTION

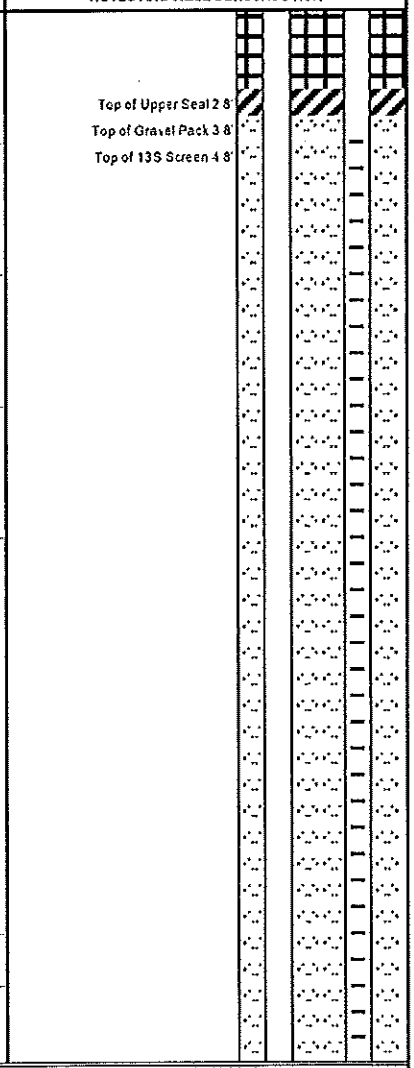

LEGEND:
SS - Split Spoon
CU -Cuttings Sample
ST - Shelby Tube
PID - Photoionization Detecto
PP - Pocket Penetrometer
HSA - Hollow Stem Augers
AR - Air Rotary
HA - Hand Auger
WB - Wash Bore
RB - Rock Bit
NX - Rock Core

THE STRATIFICATION LINES REPRESENT APPROXIMATE BOUNDARY LINES BETWEEN SOIL AND ROCK TYPES: IN-SITU, THE TRANSITION MAY BE GRADUAL.

GMP-13S &
GMP-13D

AQUATERRA

Environmental Solutions, Inc.

13 Executive Dr. Suite 1 Fairview Heights IL 62208

LOG OF BORING NO	**GMP-13**	SHEET NUMBER	2 of 2
GEOLOGIST:	C. Joyce		
CLIENT:	Republic Services, Inc.	DATE:	08/30/12
PROJECT NAME:	Bridgeton Landfill	PROJECT NUMBER:	4788.1

SAMPLE NUMBER	SAMPLE TYPE	BLOW COUNT	RECOVERY (FT)	DEPTH IN FEET	USCS CLASS	SOIL DESCRIPTION AND DRILLING CONDITIONS	NOTES:
				42, 44, 46, 48, 50, 52, 54, 56, 58, 60, 62, 64, 66, 68		Grading to Weathered Clayey SHALE, Thin slaty, Lt. Olive gray. (5y5/2)	Bottom of 13S Screen 44.8'
						Silt to Shale with fine sandy banding, Pale Red (10r6/2), pale Brown (syr5/2) Gray, Light Red (5r4/2), light Bluish gray (5b7/1), Dry Hard	Top of Lower Seal 45'
							Top of Gravel Pack 48'
						Silty SHALE, moderate red (5rs14), Dry	Top of 13D Screen 49'
AR	CU				SH	Layered with pale brown (5yr5/2) and medium bluish gray (5b5/1), saturated in fractures within unit	
						Silty SHALE, medium dark gray (NH), Dry	Bottom of 13D Screen 69'
				70, 72, 74, 76, 78, 80, 82, 84, 90, 100, 118		Boring Terminated @ 69.0'	

GMP-13D | GMP-13S

LEGEND:

SS - Split Spoon
CS - 5 foot CME Sampler
ST - Shelby Tube
PID - Photoionization Detector
PP - Pocket Penetrometer
HSA - Hollow Stem Augers
AR - Air Rotary
HA - Hand Auger
WB - Wash Bore
RB - Rock Bit
NX - Rock Core

THE STRATIFICATION LINES REPRESENT APPROXIMATE BOUNDARY LINES BETWEEN SOIL AND ROCK TYPES: IN-SITU, THE TRANSITION MAY BE GRADUAL.

GMP-14S & GMP-14D

AQUATERRA
Environmental Solutions, Inc.

13 Executive Dr. Suite 1 Fairview Heights IL 62208

LOG OF BORING NO.: **GMP-14**

SHEET NUMBER 1 of 2

CLIENT:	Republic Services, Inc.
PROJECT NAME:	Bridgeton Landfil
PROJECT NUMBER:	4788.10
PROJECT LOCATION:	Maryland Heights, MO
BORING LOCATION:	N: 1068503 E: 517249
AES PROJECT NO:	4788.10
AES GEOLOGIST:	T.Pool
START DATE:	09/04/12 FINISH DATE 09/05/12
START TIME:	FINISH TIME

DRILLING CONTRACTOR:	Roberts Environmental Drilling
DRILLER:	Patrick
DRILLING RIG:	Track Mounted CME-75
DRILLING METHOD:	8" ID HSA, 6" Air Rorary
SAMPLING METHOD:	Split Spoon, Cuttings
BORING DIAMETER:	10"/6"
WELL DIAMETER:	2x2"
WELL COMPLETION:	Stick-Up
SURFACE ELEVATION:	480.7
TOC ELEVATION:	S-483.53; D-483.56
WATER LEVEL:	-
WATER ELEVATION:	-
DATE:	-

WELL CONSTRUCTION DETAILS		
MATERIAL:	PVC	PVC
CASING DIAMETER:	2"	2"
WELL TOTAL DEPTH:	79'	34
SCREEN LENGTH:	40'	25'
RISER LENGTH:	42'	12'
TOP OF SCREEN:	33.9'	8.8
BOTTOM OF SCREEN:	73.9'	33.9'
SCREEN SLOT:	0.010 in	0.010 in
TOP OF FILTER PACK:	37'	7'
TOP OF SEAL:	34	3'
TYPE OF SEAL:	3/8" Bentonite Chips	→
TYPE OF FILTER PACK:	12/20 Sand	GMP-14D / GMP-14S

SAMPLE NUMBER	SAMPLE TYPE	BLOW COUNT	RECOVERY (FT)	DEPTH IN FEET	USCS CLASS	SOIL DESCRIPTION AND DRILLING CONDITIONS
HSA-1				2, 4	ML	Grass on surface with Brown clayey SILT, dry trace gravel
SS-1	SS		2.0	6	CL	Brown silty CLAY, dry
HSA-2	CU			8		
SS-2	SS		2.0	10, 12	CL	Tan to light Gray, silty CLAY, moist
HSA-3	CU			14		
SS-3	SS		2.0	16	CL	Gray with Tan silty CLAY, wet
HSA-4	CU			18, 20		
SS-4	SS		2.0	22	ML	Dark gray clayey SILT, wet
HSA-5	CU			24		
SS-5	SS		2.0	26	SM	Gray silty fine SAND, saturated
HSA-6	CU			28, 30		
SS-6	SS		0.0	32	SP	No Sample due to Auger backfill of sand SAND in cuttings
HSA-7	CU			34		
HSA-8	CU			36		
AR	CU			38, 40	LMS	Bit Refusal/Bedrock at 37' Gray weathered LIMESTONE with occasional shale, wet

NOTES AND WELL CONSTRUCTION

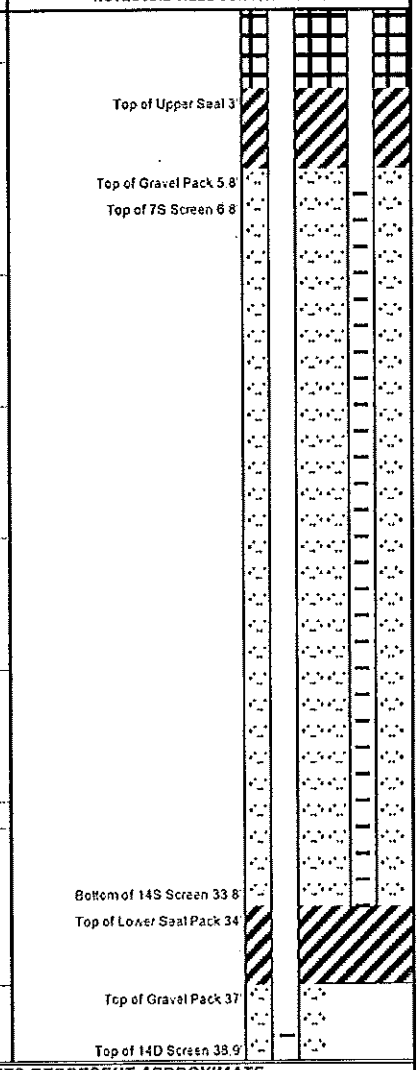

LEGEND:

SS - Split Spoon
CU -Cuttings Sample
ST - Shelby Tube
PID - Photoionization Detector
PP - Pocket Penetrometer
HSA - Hollow Stem Augers
AR - Air Rotary
HA - Hand Auger
WB - Wash Bore
RB - Rock Bit
NX - Rock Core

THE STRATIFICATION LINES REPRESENT APPROXIMATE BOUNDARY LINES BETWEEN SOIL AND ROCK TYPES: IN-SITU, THE TRANSITION MAY BE GRADUAL.

GMP-14S & GMP-14D

AQUATERRA

Environmental Solutions, Inc.

13 Executive Dr. Suite 1 Fairview Heights IL 62208

LOG OF BORING NO. **GMP-14** SHEET NUMBER 2 of 2

GEOLOGIST: T.Pool

CLIENT: Republic Services, Inc.

DATE: 09/04/12

PROJECT NAME: Bridgeton Landfill

PROJECT NUMBER: 4788.1

SAMPLE NUMBER	SAMPLE TYPE	BLOW COUNT	RECOVERY (FT)	DEPTH IN FEET	USCS CLASS	SOIL DESCRIPTION AND DRILLING CONDITIONS	NOTES:	GMP-14D	GMP-14S
				42					
				44					
				46					
				48					
				50					
				52					
				54					
				56					
				58					
AR	CU			60	LMS				
				62		Gray LIMESTONE, wet			
				64					
				66					
				68					
				70					
				72					
				74					
				76					
				78			Bottom of 14D Screen 78.8		
				80		Boring Terminated @ 79'			
				82					
				84					
				86					
				88					
				90					

LEGEND:

SS - Split Spoon
CS - 5 foot CME Sampler
ST - Shelby Tube
PID - Photoionization Detecto
PP - Pocket Penetrometer
HSA - Hollow Stem Augers
AR - Air Rotary
HA - Hand Auger
WB - Wash Bore
RB - Rock Bit
NX - Rock Core

THE STRATIFICATION LINES REPRESENT APPROXIMATE BOUNDARY LINES BETWEEN SOIL AND ROCK TYPES: IN-SITU, THE TRANSITION MAY BE GRADUAL.

GMP-15S & GMP-15D

AQUATERRA
Environmental Solutions, Inc.
13 Executive Dr. Suite 1 Fairview Heights IL 62208

LOG OF BORING NO. **GMP-15**

SHEET NUMBER 1 of 2

CLIENT:	Republic Services, Inc.	DRILLING CONTRACTOR:	Roberts Environmental Drilling
PROJECT NAME:	Bridgeton Landfill	DRILLER:	Patrick
PROJECT NUMBER:	4788.10	DRILLING RIG:	Track Mounted CME-75
PROJECT LOCATION	Maryland Heights, MO	DRILLING METHOD:	8" ID HSA, 6" Air Rorary
		SAMPLING METHOD:	Split Spoon, Cuttings
		BORING DIAMETER:	10"/6"
BORING LOCATION	N: 1067710 E: 517839	WELL DIAMETER:	2x2"
		WELL COMPLETION:	Stick-Up
AES PROJECT NO:	4788.10	SURFACE ELEVATION:	483'
AES GEOLOGIST:	T.Pool	TOC ELEVATION:	S-481.15; D-481.19
START DATE	09/10/12 FINISH DATE 09/10/12	WATER LEVEL:	-
START TIME	FINISH TIME	WATER ELEVATION:	-
		DATE:	-

WELL CONSTRUCTION DETAILS		
MATERIAL:	PVC	PVC
CASING DIAMETER:	2"	2"
WELL TOTAL DEPTH:	79'	27'
SCREEN LENGTH:	45'	20'
RISER LENGTH:	35.7'	9.6'
TOP OF SCREEN:	33.5'	6.8'
BOTTOM OF SCREEN:	78.5'	26.8'
SCREEN SLOT:	0.010 IN	0.010 IN
TOP OF FILTER PACK:	32.3'	5.3'
TOP OF SEAL:	27	3'
TYPE OF SEAL:	3/8" Bentonite Chips	→
TYPE OF FILTER PACK:	12/20 Silica	GMP-15D / GMP-15S

SAMPLE NUMBER	SAMPLE TYPE	BLOW COUNT	RECOVERY (FT)	DEPTH IN FEET	USCS CLASS	SOIL DESCRIPTION AND DRILLING CONDITIONS
HSA-1				2, 4	ML	Grass on surface with Dark brown clayey SILT, dry
SS-1	SS		2.0	6	ML	Brown clayey SILT, trace gravel, dry
HSA-2	CU			8	ML	
SS-2	SS		2.0	10	CL	Tan mottled gray silty CLAY, wet
HSA-3	CU			12, 14	CL	
SS-3	SS		2.0	16	CL	Brown silty CLAY, wet
					CL	Brown sandy CLAY, wet
HSA-4	CU			18	ML	Brown clayey SILT, wet
SS-4	SS		2.0	20	ML	Brown sandy SILT, saturated
HSA-5	CU			22, 24	ML	
SS-5	SS		2.0	26	CL	Gray silty CLAY, wet
HSA-6	CU			28	CL	
AR	CU			30, 32, 34, 36, 38, 40	LMS	Bit refusal/ Bedrock @ 29' (Rock in SS shoe) Gray weathered LIMESTONE, with clay in cuttings, wet

NOTES AND WELL CONSTRUCTION

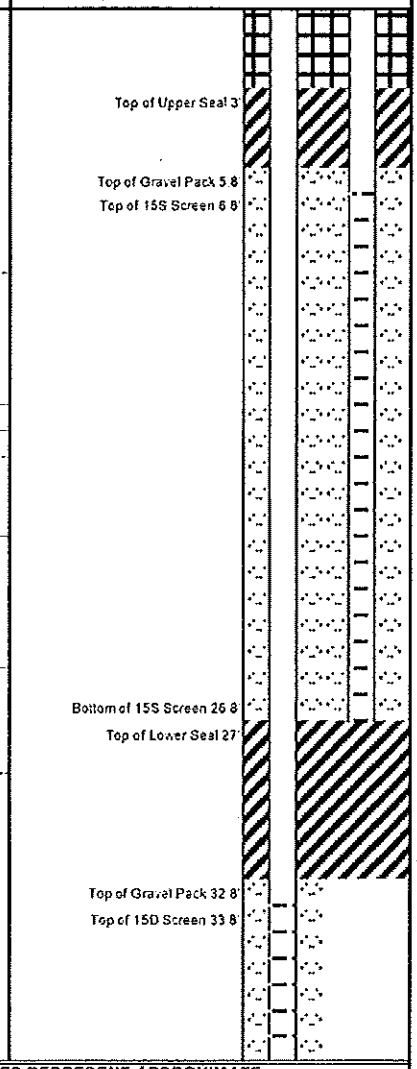

LEGEND:

SS - Split Spoon
CU -Cuttings Sample
ST - Shelby Tube
PID - Photoionization Detector
PP - Pocket Penetrometer
HSA - Hollow Stem Augers
AR - Air Rotary
HA - Hand Auger
WB - Wash Bore
RB - Rock Bit
NX - Rock Core

THE STRATIFICATION LINES REPRESENT APPROXIMATE BOUNDARY LINES BETWEEN SOIL AND ROCK TYPES: IN-SITU, THE TRANSITION MAY BE GRADUAL.

GMP-15S & GMP-15D

AQUATERRA
Environmental Solutions, Inc.
13 Executive Dr. Suite 1 Fairview Heights IL 62208

LOG OF BORING NO.: **GMP-15** SHEET NUMBER 2 of 2

GEOLOGIST: T.Pool
CLIENT: Republic Services, Inc.
DATE: 09/10/12
PROJECT NAME: Bridgeton Landfill
PROJECT NUMBER: 4786.1

SAMPLE NUMBER	SAMPLE TYPE	BLOW COUNT	RECOVERY (FT)	DEPTH IN FEET	USCS CLASS	SOIL DESCRIPTION AND DRILLING CONDITIONS	NOTES:	GMP-15D	GMP-15S
				42		Gray weathered LIMESTONE, with clay in cuttings, wet			
				44					
				46					
				48					
				50					
				52					
				54					
				56					
				58					
AR	CU			60	LMS				
				62					
				64		Gray LIMESTONE, wet			
				66					
				68					
				70					
				72					
				74					
				76					
				78			Bottom of 15D Screen 78 ft		
				80		Bottom of Boring @ 79'			
				82					
				84					
				86					
				88					
				90					

LEGEND:
SS - Split Spoon
CS - 5 foot CME Sampler
ST - Shelby Tube
PID - Photoionization Detector
PP - Pocket Penetrometer
HSA - Hollow Stem Augers
AR - Air Rotary
HA - Hand Auger
WB - Wash Bore
RB - Rock Bit
NX - Rock Core

THE STRATIFICATION LINES REPRESENT APPROXIMATE BOUNDARY LINES BETWEEN SOIL AND ROCK TYPES: IN-SITU, THE TRANSITION MAY BE GRADUAL.

GMP-16S AND GMP-16D

AQUATERRA
Environmental Solutions, Inc.
13 Executive Dr. Suite 1 Fairview Heights IL 62208

LOG OF BORING NO: **GMP-16**

SHEET NUMBER 1 of 2

CLIENT:	Republic Services, Inc.
PROJECT NAME:	Bridgeton Landfill
PROJECT NUMBER:	4788.10
PROJECT LOCATION:	Maryland Heights, MO
BORING LOCATION:	N: 1068094 E: 517531
AES PROJECT NO:	4788.10
AES GEOLOGIST:	T.Pool
START DATE	09/11/12 FINISH DATE 09/11/12
START TIME	FINISH TIME

DRILLING CONTRACTOR:	Roberts Environmental Drilling
DRILLER:	Patrick
DRILLING RIG:	Track Mounted CME-75
DRILLING METHOD:	8" ID HSA, 6" Air Rorary
SAMPLING METHOD:	Split Spoon, Cuttings
BORING DIAMETER:	10"/6"
WELL DIAMETER:	2x2"
WELL COMPLETION:	Flush Mount
SURFACE ELEVATION:	477.1
TOC ELEVATION:	S-4476.77; D-476.81
WATER LEVEL:	-
WATER ELEVATION:	-
DATE:	-

WELL CONSTRUCTION DETAILS		
MATERIAL:	PVC	PVC
CASING DIAMETER:	2"	2"
WELL TOTAL DEPTH:	78'	28'
SCREEN LENGTH:	45'	20'
RISER LENGTH:	32.7'	7.6'
TOP OF SCREEN:	32.8	7.8'
BOTTOM OF SCREEN:	77.8'	27.8'
SCREEN SLOT:	0.010 in	0.010 in
TOP OF FILTER PACK:	30'	6.8'
TOP OF SEAL:	25'	3'
TYPE OF SEAL:	3-5" Bentonite Chips	→
TYPE OF FILTER PACK:	12/20 Sand GMP-16D	GMP-16S

SAMPLE NUMBER	SAMPLE TYPE	BLOW COUNT	RECOVERY (FT)	DEPTH IN FEET	USCS CLASS	SOIL DESCRIPTION AND DRILLING CONDITIONS
HSA-1				2, 4	GM	Brown with gray silty GRAVEL, dry
SS-1	SS		2.0	6	SP	Brown fine-medium SAND, dry
HSA-2	CU			8	ML	Light brown clayey SILT, dry
SS-2	SS		0.0	10		Rock in shoe no sample
HSA-3	CU			12, 14	SP	
SS-3	SS		2.0	16		Brown silty fine SAND, trace medium SAND, saturated
HSA-4	CU			18, 20		no samples do to saturated sand in cuttings
HSA-5	CU			22, 24, 26		
HSA-6	CU			28		Bit refusal/bedrock at 29.5' (LMS present in SS shoe)
AR	CU			30, 32, 34, 36, 38, 40	LMS	Gray weathered LIMESTONE, with sand in cuttings, wet

NOTES AND WELL CONSTRUCTION

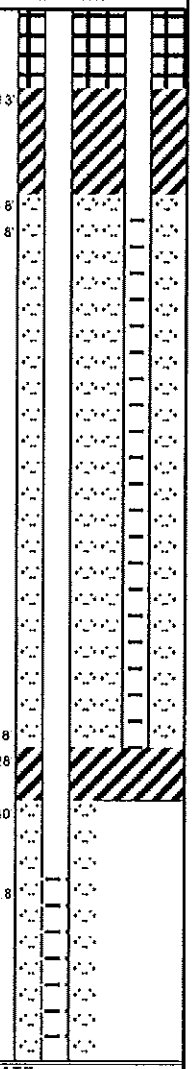

LEGEND:

SS - Split Spoon	*PID - Photoionization Detector*	*HA - Hand Auger*
CU - Cuttings Sample	*PP - Pocket Penetrometer*	*WB - Wash Bore*
ST - Shelby Tube	*HSA - Hollow Stem Augers*	*RB - Rock Bit*
	AR - Air Rotary	*NX - Rock Core*

THE STRATIFICATION LINES REPRESENT APPROXIMATE BOUNDARY LINES BETWEEN SOIL AND ROCK TYPES: IN-SITU, THE TRANSITION MAY BE GRADUAL.

GMP-16S AND GMP-16D

AQUATERRA
Environmental Solutions, Inc.
13 Executive Dr. Suite 1 Fairview Heights IL 62208

LOG OF BORING NO.: **GMP-16** SHEET NUMBER 2 of 2

GEOLOGIST: T.Pool
CLIENT: Republic Services, Inc.
DATE: 09/11/12
PROJECT NAME: Bridgeton Landfill
PROJECT NUMBER: 4788.1

SAMPLE NUMBER	SAMPLE TYPE	BLOW COUNT	RECOVERY (FT)	DEPTH IN FEET	USCS CLASS	SOIL DESCRIPTION AND DRILLING CONDITIONS	NOTES:	GMP-16D	GMP-16S
						Gray weathered LIMESTONE, wet			
				42					
				44					
				46					
				48					
				50					
				52					
				54					
				56					
				58					
AR	CU			60	LMS	Gray LIMESTONE, wet			
				62					
				64					
				66					
				68					
				70					
				72					
				74					
				76					
				78					
						Bottom of Boring @ 78'			
				80					
				82					
				84					
				86					
				88					
				90					

LEGEND:
SS - Split Spoon
CS - 5 foot CME Sampler
ST - Shelby Tube
PID - Photoionization Detector
PP - Pocket Penetrometer
HSA - Hollow Stem Augers
AR - Air Rotary
HA - Hand Auger
WB - Wash Bore
RB - Rock Bit
NX - Rock Core

THE STRATIFICATION LINES REPRESENT APPROXIMATE BOUNDARY LINES BETWEEN SOIL AND ROCK TYPES: IN-SITU, THE TRANSITION MAY BE GRADUAL.

SENTRY PROBE

GMP-4
As Built Diagram

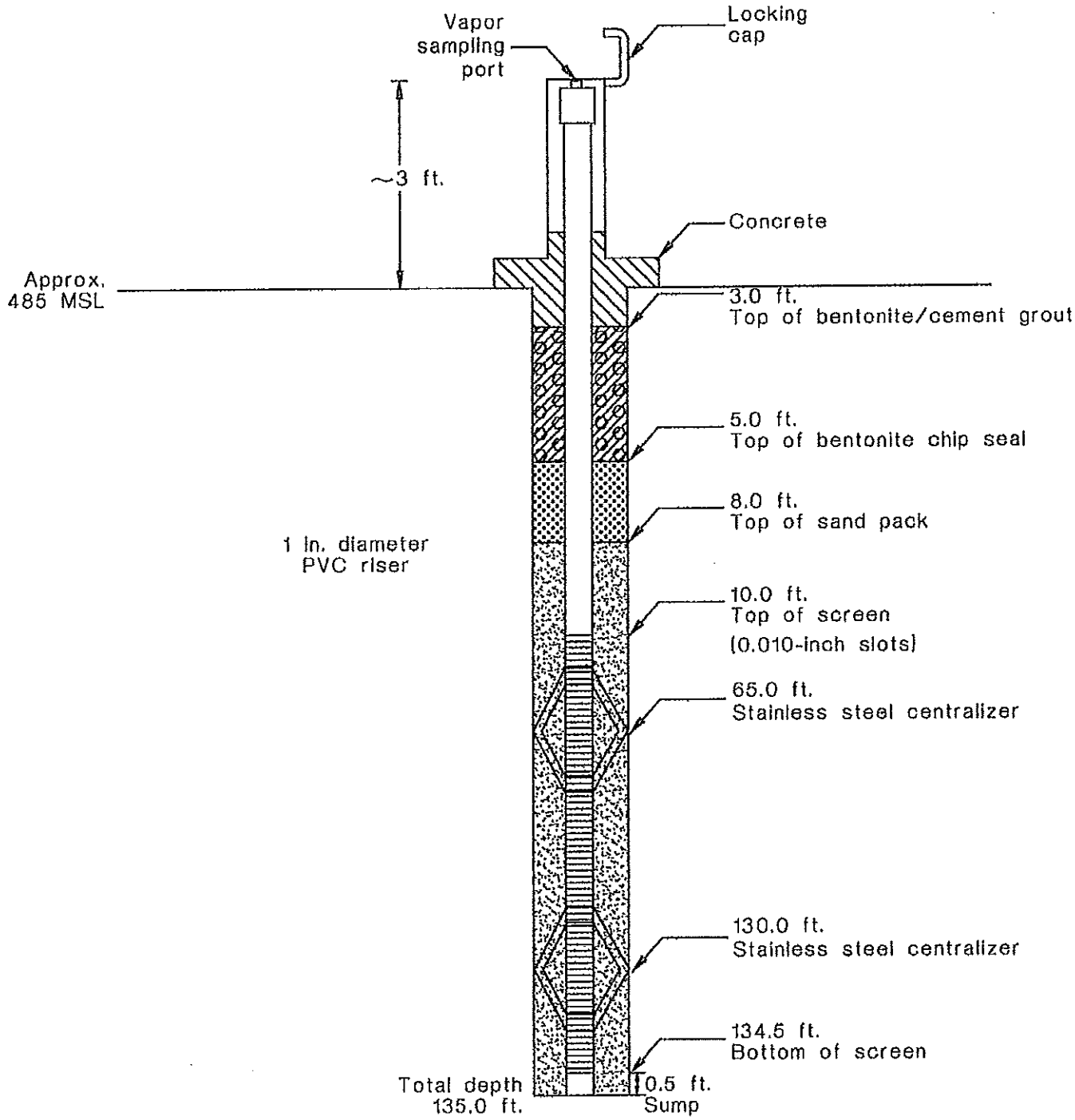

(Not to Scale)

All depths relative to ground surface

2206S-BL
GMP
GMP-4

SENTRY
PROBE GMP-04

MISSOURI DEPARTMENT OF NATURAL RESOURCES
DIVISION OF GEOLOGY AND LAND SURVEY

MONITORING WELL CERTIFICATION RECORD

OFFICE USE ONLY	DATE RECEIVED
REF. NO. 162334	
C.R. NO.	CHECK NO.
STATE WELL NUMBER	TRANSMITTAL NO.
CHECKED BY	ROUTE
APPROVED BY	ENTERED Pt.1 Pt.2 Pt.3

INFORMATION SUPPLIED BY MONITORING WELL CONTRACTOR

SITE/FACILITY NAME: Bridgeton Landfill Authority
WELL NUMBER: GMP-4
SITE ADDRESS: 13570 St. Charles Rock Rd
CITY: Bridgeton
STATE: MO
ZIP CODE: 63042
OWNER NAME: Same
TELEPHONE: 314 739 1919
OWNER ADDRESS:
CITY:
STATE:
ZIP CODE:

VARIANCE ISSUED: ☑ YES ☐ NO
DATE ISSUED: 10-23-97
VARIANCE NUMBER: V 833

DESCRIBE LOCATION OF THE WELL SO WE WOULD BE ABLE TO VISIT IT: East Side of Landfill in Fenced Land Approximately two well North of old St Charles Rock Road

LOCATION OF WELL
SHOW LOCATION IN SECTION PLAT
COUNTY: St Louis
SURFACE ELEVATION: 478
SMALLEST ¼ ___ ¼ ___ ¼ ___ ¼ LARGEST ¼
SEC. ___ TWN. ___ N.RNG. ___ E OR W
LAT. 92. 26. 34. LONG. 38. 46. 12.

MONITORING WELL INSTALLATION CONTRACTOR'S NAME: Layne Western — PERMIT NUMBER: 001261 WPM
DRILLING CONTRACTOR'S NAME: Layne Western — PERMIT NUMBER: 001261 WPM

WELL CONSTRUCTION INFORMATION

TYPE OF WELL: ☐ MONITORING WELL ☐ PIEZOMETER ☑ OTHER Gas Probe
TYPE OF POTENTIAL SITE: ☐ HAZARDOUS MATERIAL ☑ LANDFILL ☐ OTHER ☐ L.U.S.T.
MONITORING FOR: (CHECK ALL THAT APPLY) ☐ V.O.C. ☐ METALS ☐ PETROLEUM PRODUCT ☑ OTHER: GAS ONLY

PROTECTIVE CASING DETAILS (IF USED): LENGTH 5 FT. DIAMETER OF CASING 6 IN. WEIGHT OR SDR # 40 DIAMETER AND DEPTH OF DRILL HOLE 8.5 IN. FT. JOINTS ☐ THREADED ☐ MECHANICAL ☐ WELDED ☐ OTHER MATERIAL ☐ THERMO PLASTIC ☑ STEEL ☐ FLUORO POLYMER TYPE LOCKING CAP? ☑ YES ☐ NO

CAP VENTED ☐ YES ☑ NO WEEP HOLE? ☑ YES ☐ NO
CASING GROUT DETAILS: MATERIAL ☐ CEMENT ☑ CONCRETE ☐ OTHER DEPTH FROM THE SURFACE TO THE BOTTOM OF THE CASING GROUT SEAL 3 FT.
TYPE OF SURFACE COMPLETION: ☑ ABOVE GROUND ☐ FLUSH MOUNT
DESCRIBE HOW THE FLUSH MOUNT WAS CONSTRUCTED: N/A

CENTRALIZER USED ON RISER ☐ NO ☑ YES LOCATED AT 130.9-65' MATERIAL ☑ STAINLESS STEEL ☐ OTHER

RISER PIPE DETAILS: LENGTH 10 FT. DIAMETER OF RISER PIPE 1 IN. WEIGHT OR SDR # 80 DIAMETER OF DRILL HOLE 6 IN. JOINTS ☑ THREADED ☐ MECHANICAL ☐ WELDED ☐ OTHER MATERIAL ☑ THERMO PLASTIC ☐ STEEL ☐ FLUORO POLYMER ☐ OTHER

ANNULAR SEAL: ☐ CEMENT SLURRY ☑ BENTONITE SLURRY ☐ NON SLURRY BENTONITE TYPE: ☐ CEMENT/BENTONITE SLURRY BAGS OF CEMENT USED ___ % BENTONITE USED ___ WATER USED/BAG ___ GAL.
BENTONITE SEAL: MATERIAL BENTONITE ☐ SLURRY ☑ CHIPS ☐ GRANULAR ☐ PELLETS LENGTH OF SEAL 3 BENTONITE SEAL INSTALLED IN ☑ UNSATURATED ZONE ☐ SATURATED ZONE

	TYPE	GRAIN SIZE	LENGTH OF FILTER PACK	METHOD OF INSTALLATION	Information in this column to be supplied in the Feet from Surface column	FEET FROM SURFACE	FORMATION DESCRIPTION
PRIMARY FILTER PACK	☑ SAND ☐ MANUFACTURED ☐ NATURAL	20/40	127 FT.	Tremie			
SECONDARY FILTER PACK	☐ SAND ☐ MANUFACTURED ☑ NONE	—	— FT.		Depth to bottom of Protective Casing Seal:	3	0-40 Clay
WELL SCREEN	LENGTH OF SCREEN 125 FT.	DIAMETER 1 IN.	SLOT SIZE 10	WEIGHT OR SDR # 80 MATERIAL ☑ PLASTIC ☐ STEEL ☐ FLUORO POLYMER	Depth to Base of Annular Seal:	5	40-135 Ls/Sh
SUMP DETAILS	LENGTH OF SUMP N/A	DIAMETER OF SUMP —	MATERIAL ☐ PVC ☐ STEEL ☐ FLUORO POLYMER ☐ OTHER		Depth to Base of Bentonite Seal:	8	40-26 Clay
BACK FILL	WAS THE WELL BACK FILLED? ☐ YES ☑ NO	MATERIAL USED —	LENGTH OF BACK FILLED BORE HOLE —		Depth to Top of Primary Filter Pack:	8	
					Depth to Top of the Screen:	10	
					Depth to Bottom of the Screen:	135	
					Total Depth:	135	
					DATE WELL DRILLING WAS COMPLETED	11-17-97	

STATIC WATER LEVEL 120 FEET FROM MEASURING POINT
DATE OF STATIC WATER LEVEL 11-17-97
MEASURING POINT FOR STATIC WATER LEVEL IS ☐ TOP OF RISER PIPE ☑ OTHER Ground
ELEVATION OF MEASURING POINT 478

MULTIPLE CASED WELLS: SUBMIT ADDITIONAL AS-BUILT DIAGRAM SHOWING WELL CONSTRUCTION DETAILS INCLUDING TYPE AND SIZE OF ALL CASING, HOLE DIAMETERS, AND GROUT USED.

DRILLING EQUIPMENT: ☑ AIR ROTARY ☐ AUGER TYPE ☐ REVERSE ROTARY ☐ OTHER

I HEREBY CERTIFY THAT THE MONITORING WELL HEREIN DESCRIBED WAS CONSTRUCTED IN ACCORDANCE WITH THE DEPARTMENT OF NATURAL RESOURCES REQUIREMENTS FOR THE CONSTRUCTION OF MONITORING WELLS.

SIGNATURE (PRIMARY CONTRACTOR/PERMIT #): [signature] 001261WPM — DATE 1/23/98
SIGNATURE DRILLER/PERMIT #: [signature] 001261WPM — DATE 1-22-98

MO 780-1415 (7-95)
DISTRIBUTION: WHITE/DIVISION CANARY/MONITORING WELL CONTRACTOR PINK/OWNER
MAIL WHITE COPY TO: DEPARTMENT OF NATURAL RESOURCES, P.O. BOX 250, ROLLA, MO 65402
ENCLOSE $35 PER MONITORING WELL FOR THE CERTIFICATION FEE WITHIN 60 DAYS AFTER WELL COMPLETION
RECYCLED PAPER

GMP-05

MISSOURI DEPARTMENT OF NATURAL RESOURCES
DIVISION OF GEOLOGY AND LAND SURVEY

MONITORING WELL CERTIFICATION RECORD

OFFICE USE ONLY	DATE RECEIVED
REF. NO. 161715	
G.R. NO.	CHECK NO.
STATE WELL NUMBER	TRANSMITTAL NO.
CHECKED BY	ROUTE
APPROVED BY	ENTERED Ph 1 Ph 2 Ph 3

INFORMATION SUPPLIED BY MONITORING WELL CONTRACTOR

SITE/FACILITY NAME: Bridgeton Landfill Authority
WELL NUMBER: GMP-5

SITE ADDRESS: 13570 St Charles Rock Rd
CITY: Bridgeton
STATE: Mo
ZIP CODE: 63042

OWNER NAME: Same
TELEPHONE: 314 739 1719

OWNER ADDRESS:
CITY:
STATE:
ZIP CODE:

VARIANCE ISSUED: ☑ YES ☐ NO
DATE ISSUED: 10-23-97
VARIANCE NUMBER: V 835

DESCRIBE LOCATION OF THE WELL SO WE WOULD BE ABLE TO VISIT IT:
Along East side of Landfill in Hamburg between old St Charles Rk Rd & St Charles Rk Road

LOCATION OF WELL SHOW LOCATION IN SECTION PLAT
COUNTY: St Louis
SURFACE ELEVATION: 1478
SMALLEST ¼ ____ ¼ ____ ¼ ____ ¼ LARGEST ¼
SEC. ____ TWN. ____ N,RNG. ____ E OR W
LAT. 92. 26. 34. LONG. 38. 46. 12.

MONITORING WELL INSTALLATION CONTRACTOR'S NAME: Layne-Western — PERMIT NUMBER: 001261 wpm
DRILLING CONTRACTOR'S NAME: Layne-Western — PERMIT NUMBER: 001261 wpm

WELL CONSTRUCTION INFORMATION

TYPE OF WELL: ☐ MONITORING WELL ☐ PIEZOMETER ☑ OTHER Gas Probe
TYPE OF POTENTIAL SITE: ☐ HAZARDOUS MATERIAL ☑ LANDFILL ☐ OTHER ☐ L.U.S.T.
MONITORING FOR (CHECK ALL THAT APPLY): ☐ V.O.C. ☐ METALS ☐ PETROLEUM PRODUCT ☑ OTHER Gas ONLY

PROTECTIVE CASING DETAILS (IF USED): LENGTH 5 FT. DIAMETER OF CASING 6 IN. WEIGHT OR SDR # 40 DIAMETER AND DEPTH OF DRILL HOLE 25.2 IN. FT. JOINTS ☐ THREADED ☐ MECHANICAL ☐ WELDED ☐ OTHER MATERIAL ☐ THERMO PLASTIC ☑ STEEL ☐ FLUORO POLYMER TYPE LOCKING CAP? ☑ YES ☐ NO

CAP VENTED ☐ YES ☑ NO
WEEP HOLE? ☑ YES ☐ NO
CASING GROUT DETAILS: MATERIAL ☐ CEMENT ☑ CONCRETE ☐ OTHER
DEPTH FROM THE SURFACE TO THE BOTTOM OF THE CASING GROUT SEAL: 3 FT.
TYPE OF SURFACE COMPLETION: ☑ ABOVE GROUND ☐ FLUSH MOUNT
DESCRIBE HOW THE FLUSH MOUNT WAS CONSTRUCTED: N/A

CENTRALIZER USED ON RISER ☐ NO ☑ YES LOCATED AT 117, 50'
MATERIAL ☑ STAINLESS STEEL ☐ OTHER

RISER PIPE DETAILS: LENGTH 10 FT. DIAMETER OF RISER PIPE 1 IN. WEIGHT OR SDR # 80 DIAMETER OF DRILL HOLE 6 IN. JOINTS ☐ THREADED ☐ MECHANICAL ☐ WELDED ☐ OTHER MATERIAL ☐ STEEL ☐ OTHER ☑ THERMO PLASTIC ☐ FLUORO POLYMER

ANNULAR SEAL: ☐ CEMENT SLURRY ☑ BENTONITE SLURRY ☐ NON SLURRY BENTONITE TYPE: ☐ CEMENT/BENTONITE SLURRY BAGS OF CEMENT USED ____ ½ BENTONITE USED ____ WATER USED/BAG ____ GAL.
BENTONITE SEAL: MATERIAL BENTONITE ☐ SLURRY ☑ CHIPS ☐ GRANULAR ☐ PELLETS
LENGTH OF SEAL 3
BENTONITE SEAL INSTALLED IN ☑ UNSATURATED ZONE ☐ SATURATED ZONE

PRIMARY FILTER PACK: TYPE ☑ SAND ☐ MANUFACTURED ☐ NATURAL GRAIN SIZE 20/40 LENGTH OF FILTER PACK 112 FT. METHOD OF INSTALLATION Tremie

SECONDARY FILTER PACK: TYPE ☐ SAND ☐ MANUFACTURED ☑ NONE GRAIN SIZE LENGTH OF FILTER PACK — FT. METHOD OF INSTALLATION

WELL SCREEN: LENGTH OF SCREEN 110 FT. DIAMETER 1 IN. SLOT SIZE 10 WEIGHT OR SDR # 80 MATERIAL ☑ PLASTIC ☐ STEEL ☐ FLUORO POLYMER

SUMP DETAILS: LENGTH OF SUMP N/A DIAMETER OF SUMP — MATERIAL ☐ PVC ☐ STEEL ☐ FLUORO POLYMER ☐ OTHER

BACK FILL: WAS THE WELL BACK FILLED? ☐ YES ☑ NO MATERIAL USED — LENGTH OF BACK FILLED BORE HOLE

Information in this column to be supplied in the Feet from Surface column

	FEET FROM SURFACE	FORMATION DESCRIPTION
Depth to bottom of Protective Casing Seal	3	0-10 Clay & sand
Depth to Base of Annular Seal	3	10-118 Shale/LS
Depth to Base of Bentonite Seal	6	
Depth to Top of Primary Filter Pack	6	
Depth to Top of the Screen	8	
Depth to Bottom of the Screen	118	
Total Depth	118	
DATE WELL DRILLING WAS COMPLETED	11-13-97	

STATIC WATER LEVEL 100 FEET FROM MEASURING POINT
DATE OF STATIC WATER LEVEL 11-13-97
MEASURING POINT FOR STATIC WATER LEVEL IS ☐ TOP OF RISER PIPE ☐ OTHER
ELEVATION OF MEASURING POINT

MULTIPLE CASED WELLS: SUBMIT ADDITIONAL AS BUILT DIAGRAM SHOWING WELL CONSTRUCTION DETAILS INCLUDING TYPE AND SIZE OF ALL CASING, HOLE DIAMETERS, AND GROUT USED.

DRILLING EQUIPMENT: ☑ AIR ROTARY ☐ AUGER TYPE ☐ REVERSE ROTARY ☐ OTHER

I HEREBY CERTIFY THAT THE MONITORING WELL HEREIN DESCRIBED WAS CONSTRUCTED IN ACCORDANCE WITH THE DEPARTMENT OF NATURAL RESOURCES REQUIREMENTS FOR THE CONSTRUCTION OF MONITORING WELLS.

SIGNATURE PRIMARY CONTRACTOR/PERMIT # [illegible] 001261 wpm — DATE 11/23/98
SIGNATURE DRILLER/PERMIT # 001261 wpm — DATE 11/20/98

MO 780-1415 (7-95)
DISTRIBUTION: WHITE/DIVISION CANARY/MONITORING WELL CONTRACTOR PINK/OWNER
MAIL WHITE COPY TO: DEPARTMENT OF NATURAL RESOURCES, P.O. BOX 250, ROLLA, MO 65402
ENCLOSE $35 PER MONITORING WELL FOR THE CERTIFICATION FEE WITHIN 60 DAYS AFTER WELL COMPLETION

SENTRY PROBE
GMP-06

LAIDLAW
LAIDLAW WASTE SYSTEMS INC.

SOIL BOREHOLE LOG

SITE NAME AND LOCATION	DRILLING METHOD:	BORING NO.
LAIDLAW\RI-FS\MO WEST LAKE LANDFILL OPERABLE UNIT 2	4.25 inch I.D. Hollow Stem Auger	PZ-201-SS
		SHEET 1 OF 3
	SAMPLING METHOD:	
	SPLIT SPOON: 2.0 inch O.D./1.5 inch I.D. (SP)	DRILLING
	SHELBY TUBE: 3.0 inch O.D./2 13/16 inch I.D. (SH)	START / FINISH
	WATER LEVEL / TIME / DATE / CASING DEPTH	TIME 8:30 / TIME 10:30
		DATE 2/15/95 / DATE 2/15/95

DATUM NORTHING: 1067819.55 EASTING: 516862.06 ELEVATION 478.0

DRILL RIG CME 75 - TRUCK MOUNT

ANGLE BEARING

SAMPLE HAMMER

SURFACE CONDITIONS

DEPTH IN FEET (ELEVATION)	BLOW/ 6 IN. ON SAMPLER	RECOVERY	SYMBOL	SAMPLER SYMBOL	SAMPLE NUMBER AND DESCRIPTION OF MATERIAL	SAMPLER TYPE	REMARKS
1	2 2 3 3	2.0' / 2.0' (100%)			(0.0-3.4 Ft.) Firm, dark yellowish brown (10YR 4/2), CLAYEY SILT, NR, damp, (CL-ML), (LOESS)	SP 1	
2 3	2 2 4 5	1.3' / 2.0' (65%)				SP 2	
4 5	1 2 3 3	2.0' / 2.0' (100%)			(3.4-17.4 Ft.) Soft to firm, yellowish brown (10YR 6/2), CLAYEY SILT, trace fine Sand, little iron staining and black organic nodules, NR, moist, (CL-ML), (LOESS)	SP 3	
6 7	1 2 3 4	2.0' / 2.0' (100%)				SP 4	Air monitoring 9:00 20% O2 0.0 ppm H2S 0% LEL 0.0 ppm PID
8 9	2 4 3 4	2.0' / 2.0' (100%)				SP 5	
10 11	1 2 2 2	2.0' / 2.0' (100%)				SP 6	
12 13	1 1 1 2	2.0' / 2.0' (100%)				SP 7	Air monitoring 9:15 20% O2 0.0 ppm H2S 0% LEL 0.0 ppm PID
14	1 1 2 3	2.0' / 2.0' (100%)				SP 8	

DRILLING CONTR LAYNE-WESTERN

LOGGED BY J. MILLER CHK'D BY W. HERST

DATE 2/15/95

JOB NO.: 943-2848

FILENAME: P2201SS

SENTRY PROBE GMP-06

LAIDLAW WASTE SYSTEMS INC.

SOIL BOREHOLE LOG

SITE NAME AND LOCATION	DRILLING METHOD:	BORING NO.
LAIDLAW\RI-FS\MO WEST LAKE LANDFILL OPERABLE UNIT 2	4.25 inch I.D. Hollow Stem Auger	PZ-201-SS
		SHEET 2 OF 3
	SAMPLING METHOD:	
	SPLIT SPOON: 2.0 inch O.D./1.5 inch I.D. (SP)	DRILLING
	SHELBY TUBE: 3.0 inch O.D./2 13/16 inch I.D. (SH)	START / FINISH
NORTHING: 1067819.55 DATUM EASTING: 516862.06 ELEVATION 478.0	WATER LEVEL / TIME / DATE / CASING DEPTH	START TIME 8:30, DATE 2/15/95; FINISH TIME 10:30, DATE 2/15/95

DRILL RIG CME 75 - TRUCK MOUNT	SURFACE CONDITIONS
ANGLE BEARING	
SAMPLE HAMMER	

DEPTH IN FEET (ELEVATION)	BLOW/ 6 IN. ON SAMPLER	RECOVERY	SYMBOL	SAMPLER SYMBOL	SAMPLE NUMBER AND DESCRIPTION OF MATERIAL	SAMPLER TYPE	REMARKS
16	1 5 6 7	1.3'/2.0' (65%)			(3.4-17.4 ft.) Soft to firm, yellowish brown (10YR 6/2), CLAYEY SILT, trace fine Sand, little iron staining and black organic nodules, NR, moist, (CL-ML), (LOESS) @ 15.5-16.0 ft., CLAYEY SILT becomes wet	SP 8	
17					(460.6) 17.4	SP 9	
18		0.5'/2.0' (25%)			(17.4-20.5 ft.) Compact, pale yellowish brown (10YR 5/4), fine SAND, little Silt, NR, damp, (SP), (ALLUVIUM)		
19						SH 10	
20	3 3 5 6	1.5'/2.0' (75%)			(457.5) 20.5		
21					(20.5-30.0 ft.) Firm to stiff, olive gray (5Y 4/1) to moderate yellowish brown (10YR 5/4), laminated CLAYEY SILT, NR, moist, (CL-ML), (LACUSTRINE)	SP 11	
22	3 5 6 7	1.2'/2.0' (60%)					
23						SP 12	
24	3 5 7 8	1.7'/2.0' (85%)			@ 23.7-24.0 ft., medium dark gray (N4), SILTY fine sand layer, damp, (SM)		
25					@ 24.8, 25.2, and 25.6 ft., thin silty fine sand layers (<1 inch)	SP 13	
26		1.8'/2.0' (90%)					
27						SH 14	
28	13 50/3"	0.6'/2.0' (30%)					
29					@ 29.0 ft., limestone rock encountered	SP 15	

DRILLING CONTR LAYNE-WESTERN

LOGGED BY J. MILLER

DATE 2/15/95 CHK'D BY W. HERST

JOB NO.: 943-2848

FILENAME: PZ201SS

SENTRY PROBE GMP-06

LAIDLAW WASTE SYSTEMS INC.

SOIL BOREHOLE LOG

SITE NAME AND LOCATION	DRILLING METHOD:	BORING NO.
	4.25 inch I.D. Hollow Stem Auger	PZ-201-SS
		SHEET 3 OF 3
	SAMPLING METHOD:	
LAIDLAW\RI-FS\MO WEST LAKE LANDFILL OPERABLE UNIT 2	SPLIT SPOON: 2.0 inch O.D./1.5 inch I.D. (SP)	DRILLING
	SHELBY TUBE: 3.0 inch O.D./2 13/16 inch I.D. (SH)	START / FINISH
	WATER LEVEL	TIME / TIME
	TIME	8:30 / 10:30
	DATE	DATE / DATE
NORTHING: 1067819.55 DATUM EASTING: 516862.06 ELEVATION 478.0	CASING DEPTH	2/15/95 / 2/15/95

DRILL RIG CME 75 - TRUCK MOUNT	SURFACE CONDITIONS
ANGLE BEARING	
SAMPLE HAMMER	

DEPTH IN FEET (ELEVATION)	BLOW/ 6 IN. ON SAMPLER	RECOVERY	SYMBOL	SAMPLER SYMBOL	SAMPLE NUMBER AND DESCRIPTION OF MATERIAL	SAMPLER TYPE	REMARKS
31	10 12 6 6	1.5' 2.0' (75%)			(30.0-30.7 ft.) Very stiff, medium gray (N4), CLAYEY SILT, some fine Gravel, little fine to coarse Sand, NR, moist, (CL-ML), (ALLUVIUM) (447.3) 30.7	SP 16	
32	50/5"	0.3' 1.0' (30%)			(30.7-32.0 ft.) Stiff, dark greenish gray (5G 4/1), SILTY CLAY, trace fine sand, contains pieces of weathered limestone, NR-SR, damp, (CL), (ALLUVIUM) (445.0) 33.0	SP 17	Air monitoring 10:30 20% O2 0.0 ppm H2S 0% LEL 0.0 ppm PID
33					End of Soil Borehole Log at 32.0 ft. See PZ-201-SS Record of Drillhole for rock descriptions		
34							
35							
36							
37							
38							
39							
40							
41							
42							
43							
44							

DRILLING CONTR LAYNE-WESTERN

LOGGED BY J. MILLER CHK'D BY W. HERST

DATE 2/15/95

JOB NO.: 943-2848

FILENAME: PZ201SS

SENTRY PROBE GMP-06

RECORD OF DRILLHOLE PZ-201-SS

PROJECT: LAIDLAW/RI-FS
PROJECT NO: 943-2848
LOCATION: BRIDGETON, MO

BORING METHOD: NX Core & water
DRILLING DATE: 2/15/95
DRILL RIG: CME 75

DATUM: MSL
COORDINATES N: 1067619.55
AZIMUTH: 0

COLLAR ELEV: 481.05
E: 516862.06
INCLINATION: -90

J-Joint, F-Fault, S-Shear, B-Bedding, F-Foliation
PL-Planar, C-Curved, U-Undulating, ST-Stepped, I-Irregular
P-Polished, K-Slickensided, SM-Smooth, R-Rough, VR-V. Rough
Fe-Fe Oxide, CL-Clay Infill, CH-Chlorite, H-Healed

DEPTH (FEET)	DESCRIPTION	ELEV / DEPTH (FT)	RUN NO	CORE RECOVERY	RQD	FRACTURES PER FOOT	DIP wrt CORE AXIS	TYPE AND SURFACE DESCRIPTION	WEATHERING INDEX	STRENGTH INDEX	POINT LOAD INDEX (psi)	TEST ORIENTATION	NOTES WATER LEVELS INSTRUMENTATION
32	0.0-32.8 ft. See Soil Borehole Log PZ-201-SS	448.25											
	32.8-38.7 ft. Slightly weathered, thinly bedded, light olive gray (5Y 6/1), medium crystalline, weak, CRYSTALLINE LIMESTONE, (ST. LOUIS FORMATION) Stylolitic, calcite crystals (<1 cm.)	32.80	1	94%			90	J,PL,R,CL (2)					
34		448.55 / 34.50					90	J,I,R					
							90	J,I,R					
							90	J,PL,SM-intact					
36							90	J,I,R					
							90	J,I,R,CL					
							90	J,PL,SM,CL-intact					
							90	J,I,R,CL					
			2	100%			90	J,PL,S,CL					
							90	J,PL,SM,CL					
38							90	J,I,R,CL					
							90	J,PL,SM,CL-intact					
	38.7-49.5 ft. Slightly weathered, medium bedded, light olive gray (5Y 6/1) to greenish gray (5GY 6/1), fine crystalline, medium strong, CRYSTALLINE LIMESTONE, (ST. LOUIS FORMATION) Weathered, pyrite nodules (<2 mm.), stylolitic						90	J,I,R,CL (2)					
		441.55 / 39.50					90	J,I,R,CL					
40							90	J,I,R					
							90	J,I,R,CL					
							90	J,I,R					
							90	J,I,R,CL					
42							90	J,I,R,CL (3)					
							90	J,P,SM,CL					
							90	J,I,R,CL (2)					
							90	J,P,SM,CL (2)					
			3	100%			90	J,I,R,CL (3)					
44							90	J,PL,SM,CL					
							90	J,PL,SM,CL					
							90	J,PL,SM,CL					
							90	J,PL,SM,CL					
							90	J,PL,SM,CL					
							90	J,PL,SM,CL (2)					
46							90	J,PL,SM,CL					
							90	J,PL,SM,CL					
							90	J,PL,SM,CL (3)					
							90	J,PL,SM,CL (2)					
							90	J,PL,SM,CL					
48							90	J,PL,SM					

DEPTH SCALE: 1:2
DRILLING CONTRACTOR: LAYNE-WESTERN
DRILLER: D. MAHURIN

LOGGED: B. TILTON
CHECKED: W. HERST
DATE: 3/2/95

Golder Associates

SENTRY PROBE GMP-06

RECORD OF DRILLHOLE PZ-201-SS

PROJECT: LAIDLAW/RI-FS
PROJECT NO: 943-2848
LOCATION: BRIDGETON, MO

BORING METHOD: NX Core & water
DRILLING DATE: 2/15/95
DRILL RIG: CME 75

DATUM: MSL
COORDINATES N: 1067819.55
AZIMUTH: 0

COLLAR ELEV: 481.05
E: 516862.06
INCLINATION: -90

J-Joint, F-Fault, S-Shear, B-Bedding, F-Foliation
PL-Planar, C-Curved, U-Undulating, ST-Stepped, I-Irregular
P-Polished, K-Slickensided, SM-Smooth, R-Rough, VR-V. Rough
Fe-Fe Oxide, CL-Clay Infill, CH-Chlorite, H-Healed

DEPTH (FEET)	DESCRIPTION	ELEV / DEPTH (FT)	RUN NO	CORE RECOVERY	TYPE AND SURFACE DESCRIPTION	NOTES WATER LEVELS INSTRUMENTATION
48	38.7-49.5 ft. Slightly weathered, medium bedded, light olive gray (5Y 6/1) to greenish gray (5GY 6/1), fine crystalline, medium strong, CRYSTALLINE LIMESTONE, (ST. LOUIS FORMATION)		3	100 %	J,PL,SM,CL J,PL,SM,CL	@ 49.5 ft. Drilling rate slows down
		431.55 / 49.50				
50	Weathered, pyrite nodules (<2 mm.), stylolitic 49.5-59.5 ft. Fresh, medium bedded, olive gray (5Y 6/1), micro-crystalline, strong, CRYSTALLINE LIMESTONE, (ST. LOUIS FORMATION) Fossiliferous, stylolites				J,I,R (2) B,I,R	
52	50.9-51.6 ft. Argillaceous Limestone @ 51.5 ft. Light olive gray (5Y 6/1), Clay seam (~1/2 in.)				J,P,R	
54	54.0-55.0 ft. Moderately silicified Limestone		4	100 %	B,I,R (3) J,C-intact	
	55.0-55.1 ft. Light brown (5YR 5/6), chert zone				B,PL,R B,PL,SM	
56					J,PL,SM,CL (2) J,PL,SM,CL (2)	
58	@ 58.4 ft. Light brown (5G 6/1), Clay seam (~1/2 in.)				J,I,R J,P,R	
		421.55 / 59.50				
60	59.5-69.5 ft. Fresh, medium to thinly bedded, light olive gray (5Y 6/1), fine grained, medium strong, LIMESTONE, (ST. LOUIS FORMATION) Stylolites common, medium grained calcite crystals		5	100 %	J,I,VR J,I,VR (3) J,I,R (3)	2/15/95 @ 16:00 Stop drilling 2/20/95 @ 8:30 Begin drilling @ 59.5 ft.
62					J,I,R J,I,R (2) J,I,R (2)	
64						

DEPTH SCALE: 1:2
DRILLING CONTRACTOR: LAYNE-WESTERN
DRILLER: O. MAHURIN

LOGGED: B. TILTON
CHECKED: W. HERST
DATE: 3/2/95

Golder Associates

SENTRY PROBE GMP-06

RECORD OF DRILLHOLE PZ-201-SS

PROJECT: LAIDLAW/RI-FS
PROJECT NO: 943-2848
LOCATION: BRIDGETON, MO

BORING METHOD: NX Core & water
DRILLING DATE: 2/15/95
DRILL RIG: CME 75

DATUM: MSL
COORDINATES N: 1067819.55
AZIMUTH: 0

COLLAR ELEV: 481.05
E: 516862.06
INCLINATION: -90

J-Joint, F-Fault, S-Shear, B-Bedding, F-Foliation
PL-Planar, C-Curved, U-Undulating, ST-Stepped, I-Irregular
P-Polished, K-Slickensided, SM-Smooth, R-Rough, VR-V. Rough
Fe-Fe Oxide, CL-Clay Infill, CH-Chlorite, H-Healed

DEPTH (FEET)	DESCRIPTION	ELEV / DEPTH (FT)	RUN NO.	CORE RECOVERY	DISCONTINUITY DATA: TYPE AND SURFACE DESCRIPTION	NOTES WATER LEVELS INSTRUMENTATION
64	59.5-69.5 ft. Fresh, medium to thinly bedded, light olive gray (5Y 6/1), fine grained, medium strong, LIMESTONE, (ST. LOUIS FORMATION) Stylolites common, medium grained calcite crystals					
66			5	100 %		
68					J,I,R,CL,Fe	
		411.55 / 69.50				
70	69.5-69.5 ft. Fresh, medium bedded, light olive gray (5Y 6/1), f-m grained, medium strong, LIMESTONE, (ST. LOUIS FORMATION) Stylolites common				J,I,R,Fe	
					J,I,R	
72					J,I,R	
					J,I,R	
74					J,I,R	
	@ 75.0 and 76.5 ft. Medium bluish gray (5B 5/1), glauconite zones (less than 1 in.)		6	100 %	J,U,K,CL	
					B,U,K,CL	
	75.2-75.6 ft. Medium bluish gray (5B 5/1), chert layer				J,U,SM	
76	75.6-77.1 ft. Argillaceous, moderately porous, some open vugs (<2 mm.)					
					B,I,R,CL	
					J,I,R	
78	78.0-79.5 ft. Moderate to highly weathered fractures				J,I,R	
					J,I,R	
		401.55 / 79.50			J,I,R	
80			7	96%		

WEATHERING INDEX: SW, FR, MW, HW, CW
STRENGTH INDEX: R5, R6, R4, R3, R2, R1
POINT LOAD INDEX (psi): R1 30, R2 150, R3 300, R4 600, R5 1500, R6
TEST ORIENTATION

DEPTH SCALE: 1:2
DRILLING CONTRACTOR: LAYNE-WESTERN
DRILLER: D. MAHURIN

LOGGED: B. TILTON
CHECKED: W. HERST
DATE: 3/2/95

Golder Associates

SENTRY PROBE GMP-06

RECORD OF DRILLHOLE PZ-201-SS

PROJECT: LAIDLAW/RI-FS
PROJECT NO: 943-2648
LOCATION: BRIDGETON, MO

BORING METHOD: NX Core & water
DRILLING DATE: 2/15/95
DRILL RIG: CME 75

DATUM: MSL
COORDINATES N: 1067619.55
AZIMUTH: 0

COLLAR ELEV: 481.05
E: 515862.06
INCLINATION: -90

J-Joint, F-Fault, S-Shear, B-Bedding, F-Foliation
PL-Planar, C-Curved, U-Undulating, ST-Stepped, I-Irregular
P-Polished, K-Slikensided, SM-Smooth, R-Rough, VR-V. Rough
Fe-Fe Oxide, CL-Clay Infill, CH-Chlorite, H-Healed

DEPTH (FEET)	DESCRIPTION	ELEV / DEPTH (Ft)	RUN NO.	CORE RECOVERY	DISCONTINUITY DATA: TYPE AND SURFACE DESCRIPTION	NOTES WATER LEVELS INSTRUMENTATION
80	69.5-89.5 ft. Fresh, medium bedded, light olive gray (5Y 6/1), f-m grained, medium strong, LIMESTONE, (ST. LOUIS FORMATION) Stylolites common				J,U,R,Fe	
					J,I,R	@ 80.7 ft. Core loss
					J,PL,SM	
	81.3-81.4 ft. Medium dark gray (N4), Claystone laminae				J,I,R	
82	@ 81.6 ft. Becoming intermittently siliceous (zones < 1 in. thick), some pyritized fractures/vugs				J,I,K	
					J,I,R	
			7	96%		
84					J,I,R	
					J,I,R	
					J,I,R	
					J,I,R	
	@ 85.5 and 86.5 ft. Thin zones of glauconite in fractures				J,I,R,CL	
86						
					J,I,R,CL	
		393.55 / 87.50				
					J,I,R	
88					J,I,R	
			8	85%		
					J,I,R,CL	
	391.55	391.55				
	End of Record of Drillhole at 89.5 ft. 89.50	89.50				
90						
92						
94						
96						

Columns: GRAPHIC LOG; ROD (80, 60, 40, 20); FRACTURES PER FOOT (2, 4, 6, 8, 10); DIP wrt CORE AXIS (0, 30, 60, 90); GRAPHIC LOG; WEATHERING INDEX (SW, FR, MW, HW, CW); STRENGTH INDEX (R6, R5, R4, R3, R2, R1); POINT LOAD INDEX (psi) (R1 10, R2 150, R3 300, R4 600, R5 1500, R6); TEST ORIENTATION

DEPTH SCALE: 1:2
DRILLING CONTRACTOR: LAYNE-WESTERN
DRILLER: D. MAHURIN

LOGGED: B. TILTON
CHECKED: W. HERST
DATE: 3/2/95

Golder Associates

SENTRY PROBE
GMP-7

LAIDLAW
LAIDLAW WASTE SYSTEMS INC.

SOIL BOREHOLE LOG

SITE NAME AND LOCATION	DRILLING METHOD:				BORING NO.	
	4.25 inch I.D. Hollow Stem Auger				PZ-200-SS	
					SHEET	
	SAMPLING METHOD:				2 OF 2	
LAIDLAW/OU2 RI-FS/MO	SPLIT SPOON: 2.0 inch O.D./1.5 inch I.D. (SP)				DRILLING	
WEST LAKE LANDFILL	SHELBY TUBE: 3.0 inch O.D./2 13/16 inch I.D. (SH)				START	FINISH
OPERABLE UNIT 2	WATER LEVEL				TIME	TIME
	TIME				10:56	14:05
	DATE				DATE	DATE
NORTHING: 1068496.19	CASING DEPTH				2/10/95	2/10/95
DATUM EASTING: 516972.30 ELEVATION 483.6						

DRILL RIG CME 75 - TRUCK MOUNT
ANGLE BEARING
SAMPLE HAMMER
SURFACE CONDITIONS

DEPTH IN FEET (ELEVATION)	BLOW/ 6 IN. ON SAMPLER	RECOVERY	SYMBOL	SAMPLER SYMBOL	SAMPLE NUMBER AND DESCRIPTION OF MATERIAL	SAMPLER TYPE	REMARKS
16	4 5 7 9	1.5'/2.0' (75%)			(8.1-16.5 ft.) Stiff to very stiff, light olive gray (5Y 6/1) to light brown (5YR 5/6), homogenous, mottled CLAYEY SILT, NR, damp, (CL-ML), (LOESS)	SH 8	
17					(16.5-19.7 ft.) Stiff, light olive gray (5Y 6/1) to moderate brown (5YR 4/4), homogenous, mottled CLAYEY SILT, NR, moist, (CL-ML), (LOESS)	SP 9	
18	3 5 15 18	1.5'/2.0' (75%)					
19					(463.9) 19.7	SP 10	
20	5 15 14 12	0.0'/2.0' (0%)			(19.7-20.5 ft.) Compact, moderate yellowish brown (10YR 5/4), homogenous, fine SAND, trace Silt, NR, dry, (SM), (ALLUVIUM) (463.1) 20.5		
21					(20.5-25.5 ft.) Very stiff, light olive gray (5Y 6/1) to light brown (5YR 5/6), stratified, CLAYEY SILT, mottled with black manganese stains, NR, moist, (CL-ML), (ALLUVIUM)	SP 11	
22	5 6 9 9	1.2'/2.0' (60%)					
23						SP 12	
24	8 14 26 28	1.4'/2.0' (70%)			@ 24.3 ft., <1 inch fine sand lenses		
25					(458.1) 25.5	SP 13	
26	14 33 40/4"	0.7'/1.3' (54%)			(25.5-27.6 ft.) Dense, light brown (5YR 5/6), stratified, fine SAND, NR, dry, (SP), (ALLUVIUM)	SP 14	
27					@ 27.3 ft., <1 inch clayey silt lenses (456.3) 27.3		
28					End of Soil Borehole Log at 27.3 ft. See PZ-200-SS Record of Drillhole for rock descriptions		2/10/95 - 14:05 Finish drilling at 27.3 ft., - hit bedrock End of soil borehole at 27.3 ft.
29							

DRILLING CONTR LAYNE-WESTERN
LOGGED BY J. MILLER
DATE 2/10/95
CHK'D BY W. HERST
JOB NO.: 943-2848
FILENAME: PZ200SS

SENTRY PROBE GMP-07

RECORD OF DRILLHOLE PZ-200-SS

PROJECT: LAIDLAW/RI-FS
PROJECT NO: 943-2848
LOCATION: BRIDGETON, MO

BORING METHOD: NX core & water
DRILLING DATE: 2/10/95 -2/13/95
DRILL RIG: CME 75

DATUM: MSL
COORDINATES N: 1068496.2
AZIMUTH: 0

COLLAR ELEV: 483.61
E: 516972.2
INCLINATION: -90

ROCK TYPE: J-Joint, F-Fault, S-Shear, B-Bedding, F-Foliation; PL-Planar, C-Curved, U-Undulating, ST-Stepped, I-Irregular; P-Polished, K-Slickensided, SM-Smooth, R-Rough, VR-V. Rough; Fe-Fe Oxide, CL-Clay Infill, CH-Chlorite, H-Healed, GRF-Gravel Filled

DISCONTINUITY DATA

DEPTH SCALE (FEET)	DESCRIPTION	GRAPHIC LOG	ELEV / DEPTH (FT)	RUN NO.	CORE RECOVERY	RQD (80 60 40 20)	FRACTURES PER FOOT (2 4 6 8 10)	DIP wrt CORE AXIS (0 30 60 90)	TYPE AND SURFACE DESCRIPTION	GRAPHIC LOG	WEATHERING INDEX (FR SW MW HW CW)	STRENGTH INDEX (R6 R5 R4 R3 R2 R1)	POINT LOAD INDEX (psi) (R1 30 R2 150 R3 300 R4 600 R5 1500 R6)	TEST ORIENTATION	NOTES WATER LEVELS INSTRUMENTATION
16	0.0-27.3 ft. See Soil Borehole Log PZ-200-SS														
18															
20															
22															
24															
26															2/10/95 @ 16:12 Start Run 1 16:16 Stop-no circulation, pull core, quit for the day at 16:30
	456.31		456.31												
	27.3-44.5 ft. Slightly weathered, medium bedded, light olive gray (5Y 6/1), medium crystalline, weak, LIMESTONE, (ST. LOUIS FORMATION) Stylolitic, iron staining, calcite mineralization, 1 in. clay parting at 30.1 ft.		27.30						J,C,R (3)						2/11/95 Measure water level in augers, dry to 27.0 ft.
28									J,I,R,calcite						
									J,PL,R-CL						
									J,PL-J,R						
									J,PL,R (3)						
				1	88%				J,I,R						
									J,PL,R (3)						
									J,PL,R (2)						
									J,I,R						
30									Core Loss						
			453.11												
			30.50						J,I,R						2/11/95 @ 10:50
									J,PL,R-CL						
				2	100 %				J,I,R (4)						
									J,I,R (3)						
32															

DEPTH SCALE: 1:2
DRILLING CONTRACTOR: LAYNE-WESTERN
DRILLER: D. MAHURIN

LOGGED: J. MILLER
CHECKED: R. BOOTH
DATE: 3/9/95

Golder Associates

RECORD OF DRILLHOLE PZ-200-SS

PROJECT: LAIDLAW/RI-FS
PROJECT NO: 943-2646
LOCATION: BRIDGETON, MO

BORING METHOD: NX core & water
DRILLING DATE: 2/10/95 -2/13/95
DRILL RIG: CME 75

DATUM: MSL
COORDINATES N: 1068496.2
AZIMUTH: 0

COLLAR ELEV: 463.61
E: 516972.2
INCLINATION: -90

ROCK TYPE

J-Joint, F-Fault, S-Shear, B-Bedding, F-Foliation

PL-Planar, C-Curved, U-Undulating, ST-Stepped, I-Irregular

P-Polished, K-Slickensided, SM-Smooth, R-Rough, VR-V. Rough

Fe-Fe Oxide, CL-Clay Infill, CH-Chlorite, H-Healed, GRF-Gravel Filled

DISCONTINUITY DATA

DEPTH (FEET)	DESCRIPTION	GRAPHIC LOG	ELEV / DEPTH (FT)	RUN NO.	CORE RECOVERY	RQD	FRACTURES PER FOOT	DIP wrt CORE AXIS	TYPE AND SURFACE DESCRIPTION	GRAPHIC LOG	WEATHERING INDEX	STRENGTH INDEX	POINT LOAD INDEX (psi)	TEST ORIENTATION	NOTES WATER LEVELS INSTRUMENTATION
32	27.3-44.5 ft. Slightly weathered, medium bedded, light olive gray (5Y 6/1), medium crystalline, weak, LIMESTONE, (ST. LOUIS FORMATION)								J,ST,R						
									J,I,R-calcite						
									J,PL,R-open						
									J,PL,R						
									J,I,R-open						
									J,I,R (4)						
									J,C,R						
34									J,PL,SM (2)						
									J,C,R-CL						
									J,C,R						
									J,I,R						
									J,PL,R						
									J,C,R-CL						
36				2	100 %										
									J,I,R,CL (2)						
									J,I,R-open						
38									J,I,R-CL (2)						
									J,I,R (2)						
									J,PL,R-open						
									J,PL,SM						
40			443.51 / 40.10						J,PL,R (2)						
									J,I,R-CL (2)						
									J,PL,SM-open						
									J,I,R (2)						
42									J,I,R (3)						
									J,I,R-CL-open (5)						
									J,I,R (2)						
44				3	100 %				J,PL,SM-open (3)						
	44.5-68.7 ft. Fresh, medium bedded, light olive gray (5Y 6/1), medium crystalline, medium strong, LIMESTONE, (ST. LOUIS FORMATION)								J,I,R						
									J,PL,R-open						
									J,I,R (2)						
									J,I,R						
46									J,I,R-open						
									J,I,R (2)						
									J,I,R-CL						
48															

DEPTH SCALE: 1:2
DRILLING CONTRACTOR: LAYNE-WESTERN
DRILLER: D. MAHURIN

LOGGED: J. MILLER
CHECKED: R. BOOTH
DATE: 3/9/95

Golder Associates

SENTRY PROBE GMP-07

RECORD OF DRILLHOLE PZ-200-SS

PROJECT: LAIDLAW/RI-FS
PROJECT NO: 943-2848
LOCATION: BRIDGETON, MO

BORING METHOD: NX core & water
DRILLING DATE: 2/10/95 -2/13/95
DRILL RIG: CME 75

DATUM: MSL
COORDINATES N: 1068498.2
AZIMUTH: 0

COLLAR ELEV: 483.61
E: 516972.2
INCLINATION: -90

J-Joint, F-Fault, S-Shear, B-Bedding, F-Foliation
PL-Planar, C-Curved, U-Undulating, ST-Stepped, I-Irregular
P-Polished, K-Slickensided, SM-Smooth, R-Rough, VR-V. Rough
Fe-Fe Oxide, CL-Clay Infill, CH-Chlorite, H-Healed, GRF-Gravel Filled

DEPTH (FEET)	DESCRIPTION	ELEV / DEPTH (FT)	RUN NO	CORE RECOVERY	TYPE AND SURFACE DESCRIPTION	NOTES WATER LEVELS INSTRUMENTATION
48	44.5-68.7 ft. Fresh, medium bedded, light olive gray (5Y 6/1), medium crystalline, medium strong, LIMESTONE, (ST. LOUIS FORMATION)		3	100 %	J,I,R	
50	Argillaceous laminae, clay partings, stylolitic, brachiopod fossils	433.51 / 50.10			J,PL,SM	
52					J,PL,SM	
54					J,PL,SM	
			4	99%		
56					J,PL,SM; J,I,R; J,I,R	
58					J,I,R; J,I,R-CL (3); J,I,R (2); J,PL,SM-open; J,PL,SM-CL (3)	
60		423.51 / 60.10			J,PL,SM-CL (5); J,PL,R; J,PL,R (2); J,PL,SM-CL (2)	
62			5	85%	J,PL,R (2); J,ST,R; J,PL,R	
64	Argillaceous laminae, clay partings, stylolitic, brachiopods				J,PL,SM	

DISCONTINUITY DATA: DIP wrt CORE AXIS (0, 30, 60, 90)

WEATHERING INDEX: SW FR, MW, HW, CW

STRENGTH INDEX: R6, R5, R4, R3, R2, R1

POINT LOAD INDEX (psi): R1 30, R2 150, R3 300, R4 600, R5 1500, R6

TEST ORIENTATION

DEPTH SCALE: 1:2
DRILLING CONTRACTOR: LAYNE-WESTERN
DRILLER: D. MAHURIN

LOGGED: J. MILLER
CHECKED: R. BOOTH
DATE: 3/9/95

Golder Associates

SENTRY PROBE GMP-07

RECORD OF DRILLHOLE PZ-200-SS

Sheet 4 of 8

PROJECT: LAIDLAW/RI-FS
PROJECT NO: 943-2648
LOCATION: BRIDGETON, MO

BORING METHOD: NX core & water
DRILLING DATE: 2/10/95 -2/13/95
DRILL RIG: CME 75

DATUM: MSL
COORDINATES N: 1068496.2
AZIMUTH: 0

COLLAR ELEV: 483.61
E: 516972.2
INCLINATION: -90

J-Joint, F-Fault, S-Shear, B-Bedding, F-Foliation
PL-Planar, C-Curved, U-Undulating, ST-Stepped, I-Irregular
P-Polished, K-Slickensided, SM-Smooth, R-Rough, VR-V. Rough
Fe-Fe Oxide, CL-Clay Infill, CH-Chlorite, H-Healed, GRF-Gravel Filled

DEPTH (FEET)	DESCRIPTION	ELEV DEPTH (FT)	RUN NO.	CORE RECOVERY	RQD	FRACTURES PER FOOT	DIP wrt CORE AXIS	TYPE AND SURFACE DESCRIPTION	NOTES WATER LEVELS INSTRUMENTATION
64	44.5-68.7 ft. Fresh, medium bedded, light olive gray (5Y 6/1), medium crystalline, medium strong, LIMESTONE, (ST. LOUIS FORMATION)							J,PL,SM-CL	
								J,PL,SM-CL	
66			5	85%				J,I,R-open (2)	
								J,PL,SM-CL	
								J,PL,R	
68									
	414.91 / 68.70	415.01 / 68.60						J,I,R-intact	2/11/95 @ 16:30 Quit drilling for the day at 68.6 ft. after Run 5 2/12/95 @ 8:00 Begin coring Run 6
	68.7-76.0 ft. Slightly weathered, thickly bedded, light olive gray (5Y 6/1), fine grained, medium strong, ARENACEOUS DOLOMITE, (ST. LOUIS FORMATION)							J,I,R-intact	
70								J,I,R	
	Vuggy, fossiliferous							J,I,R-intact	
72								J,I,R-intact	
								J,PL,SM	
	73.0-74.0 ft. Medium crystalline, non-vuggy							J,I,R	
	Chert at 74.2-74.5 ft., fractured, solutionized immediately below		6	100 %				J,I,R	
74								J,I,R	
								J,I,R	
								J,I,R (2)	
								J,I,R	
								J,C,R-CL	
76	407.61 / 76.00 76.0-78.5 ft. Fresh, thinly bedded, light olive gray (5Y 5/2), microcrystalline, medium strong, LIMESTONE, (ST. LOUIS FORMATION)							J,I,R-intact	
								J,I,SM-CL	
78									
	78.5-86.0 ft. Fresh, thinly bedded, yellowish gray (5Y 7/2), medium crystalline, weak, ARGILLACEOUS LIMESTONE, (ST. LOUIS FORMATION)	404.91 / 78.70	7	100 %				J,I,R-CL	
80									

DEPTH SCALE: 1:2
DRILLING CONTRACTOR: LAYNE-WESTERN
DRILLER: D. MAHURIN

LOGGED: J. MILLER
CHECKED: R. BOOTH
DATE: 3/9/95

Golder Associates

SENTRY PROBE GMP-07

RECORD OF DRILLHOLE PZ-200-SS

PROJECT: LAIDLAW/RI-FS
PROJECT NO: 943-2848
LOCATION: BRIDGETON, MO

BORING METHOD: NX core & water
DRILLING DATE: 2/10/95 -2/13/95
DRILL RIG: CME 75

DATUM: MSL
COORDINATES N: 1068498.2
AZIMUTH: 0

COLLAR ELEV: 483.61
E: 516972.2
INCLINATION: -90

J-Joint, F-Fault, S-Shear, B-Bedding, F-Foliation
PL-Planar, C-Curved, U-Undulating, ST-Stepped, I-Irregular
P-Polished, K-Slickensided, SM-Smooth, R-Rough, VR-V. Rough
Fe-Fe Oxide, CL-Clay Infill, CH-Chlorite, H-Healed, GRF-Gravel Filled

DEPTH (FEET)	DESCRIPTION	ELEV / DEPTH (FT)	RUN NO.	CORE RECOVERY	RQD	FRACTURES PER FOOT	DIP wrt CORE AXIS	TYPE AND SURFACE DESCRIPTION	WEATHERING INDEX	STRENGTH INDEX	POINT LOAD INDEX (psi)	TEST ORIENTATION	NOTES WATER LEVELS INSTRUMENTATION
80	78.5-86.0 ft. Fresh, thinly bedded, yellowish gray (5Y 7/2), medium crystalline, weak, ARGILLACEOUS LIMESTONE, (ST. LOUIS FORMATION)							J,I,R-CL					
								J,I,R					
								J,I,R					
								J,I,R-calcite					
82								J,I,R					
								J,I,R					
								J,I,R					
								J,I,R					
								J,I,R					
84			7	100 %				J,I,R-CL					
								J,I,R-CL					
86	86.0-92.0 ft. Fresh, thickly bedded, light olive gray (5Y 6/1), microcrystalline, medium strong, ARGILLACEOUS LIMESTONE, (ST. LOUIS FORMATION)							J,I,R-CL					
								J,I,R-CL-intact					
								J,PL,SM					
88								J,I,R-CL					
		394.91 / 88.70											
	Stylolitic, brecciated, glauconite infillings 89.0-90.2 ft. Moderately weathered							J,I,R-CL					
90								J,I,R					
								J,I,R-CL					
			8	100 %				J,PL,SM-CL (2)					
		391.61 / 92.00											
92	92.0-98.7 ft. Fresh, thinly bedded, light olive gray (5Y 6/1), microcrystalline, medium strong, ARENACEOUS DOLOMITE, (ST. LOUIS FORMATION)							J,PL,SM (2)					2/13/95 @ 12:53 Measure water level at 54.3 ft. below ground surface
		389.91 / 93.70											2/14/95 @ 8:02 Measure water level at 69.5 ft. below ground surface
94			9	100 %									2/14/95 @ 17:15 Measure water level at 70.42 ft. below ground surface
								J,I,R					
96													

DEPTH SCALE: 1:2
DRILLING CONTRACTOR: LAYNE-WESTERN
DRILLER: D. MAHURIN

LOGGED: J. MILLER
CHECKED: R. BOOTH
DATE: 3/9/95

Golder Associates

RECORD OF DRILLHOLE PZ-200-SS

PROJECT: LAIDLAW/RI-FS
PROJECT NO: 943-2848
LOCATION: BRIDGETON, MO

BORING METHOD: NX core & water
DRILLING DATE: 2/10/95 -2/13/95
DRILL RIG: CME 75

DATUM: MSL
COORDINATES N: 1068498.2
AZIMUTH: 0

COLLAR ELEV: 483.61
E: 516972.2
INCLINATION: -90

ROCK TYPE

J-Joint, F-Fault, S-Shear, B-Bedding, F-Foliation, PL-Planar, C-Curved, U-Undulating, ST-Stepped, I-Irregular, P-Polished, K-Slickensided, SM-Smooth, R-Rough, VR-V. Rough, Fe-Fe Oxide, CL-Clay Infill, CH-Chlorite, H-Healed, GRF-Gravel Filled

DEPTH SCALE (FEET)	DESCRIPTION	GRAPHIC LOG	ELEV / DEPTH (FT)	RUN NO.	CORE RECOVERY	RQD	FRACTURES PER FOOT	DISCONTINUITY DATA: DIP w/r CORE AXIS	DISCONTINUITY DATA: TYPE AND SURFACE DESCRIPTION	GRAPHIC LOG	WEATHERING INDEX (SW, FR, MW, HW, CW)	STRENGTH INDEX	POINT LOAD INDEX (psi)	TEST ORIENTATION	NOTES WATER LEVELS INSTRUMENTATION
90	92.0-98.7 ft. Fresh, thinly bedded, light olive gray (5Y 6/1), microcrystalline, medium strong, ARENACEOUS DOLOMITE, (ST. LOUIS FORMATION)			9	100 %				J,I,R; J,I,R-CL; J,I,R; J,I,R-CL; J,PL,SM						
98	384.91		384.91												
	End of Record of Drillhole at 98.7 ft. 98.70		98.70												
100															
102															
104															
106															
108															
110															
112															

DEPTH SCALE: 1:2
DRILLING CONTRACTOR: LAYNE-WESTERN
DRILLER: D. MAHURIN

LOGGED: J. MILLER
CHECKED: R. BOOTH
DATE: 3/9/95

Golder Associates

TMP-1S, TMP-1M AND TMP-1D

AQUATERRA
Environmental Solutions, Inc.
13 Executive Dr. Suite 1 Fairview Heights IL 62208

LOG OF BORING NO.: **TMP-1**

SHEET NUMBER 1 of 2

CLIENT:	Republic Services, Inc.
PROJECT NAME:	Bridgeton Landfill
PROJECT NUMBER:	4788.10
PROJECT LOCATION:	Maryland Heights, MO
BORING LOCATION	N: 1066895 E: 515160
AES PROJECT NO:	4788.10
AES GEOLOGIST:	T.Pool, C. Joyce
START DATE	03/20/12 FINISH DATE 03/29/12
START TIME	FINISH TIME

DRILLING CONTRACTOR:	Roberts Environmental Drilling
DRILLER:	Patrick
DRILLING RIG:	Track Mounted CME-75
DRILLING METHOD:	10" ID HSA, 8" Air Rotary
SAMPLING METHOD:	Split Spoon, Cuttings
BORING DIAMETER:	12"/8"
WELL DIAMETER:	3x 1"
WELL COMPLETION:	Stick-Up
SURFACE ELEVATION:	456.5
TOC ELEVATION:	S-456.47; M-456.43; D-456.41
WATER LEVEL:	-
WATER ELEVATION	-
DATE:	-

WELL CONSTRUCTION DETAILS

MATERIAL:	PVC	PVC	PVC
CASING DIAMETER:	1"	1"	1"
WELL TOTAL DEPTH:	66.5'	53.5'	35.3'
SCREEN LENGTH:	10'	15'	30'
RISER LENGTH:	59.5'	41.5'	5'
TOP OF SCREEN	56.3'	38.3'	5.1'
BOTTOM OF SCREEN:	66.3'	53.3'	35.1'
SCREEN SLOT:	0.010 IN	0.010 IN	0.010 IN
TOP OF FILTER PACK:	55.5'	37.3'	4.1'
TOP OF SEAL:	53.5'	35.3'	2.1'
TYPE OF SEAL:	3/8" Bentonite Chips		
TYPE OF FILTER PACK:	12/20 Sand	TMP-1D	TMP-1M	TMP-1S

SAMPLE NUMBER	SAMPLE TYPE	BLOW COUNT	RECOVERY (FT)	DEPTH IN FEET	USCS CLASS	SOIL DESCRIPTION AND DRILLING CONDITIONS
HSA-1				2, 4	ML	Parking lot fill,gravel
SS-1	SS		2.0	6		Brown sandy, clayey SILT, dry
HSA-2	CU			8		Trace Gravel at 8'
SS-2	SS		2.0	10	SM	Brown silty SAND, dry
HSA-3	CU			12	CL	Dark brown, silty CLAY, moist
SS-3	SS		0.0	14, 16		No recovery spoon empty
HSA-4	CU			18		
SS-4	SS		2.0	20		Dark brown silty CLAY, moist
HSA-5	CU			22, 24		
SS-5	SS		2.0	26		Gray silty CLAY, wet
HSA-6	CU			28	SM	Gray silty fine SAND, saturated
SS-6	SS		2.0	30	SP	Gray fine-med SAND, saturated
HSA-7	CU			32, 34		Gray fine-med SAND, saturated
SS-7	SS		1.0	36		
AR	CU			38, 40	LMS	BEDROCK @ 36' trace sand TP ends logging here on 8/20/12 resumed by CJ on 8/29/12

NOTES AND WELL CONSTRUCTION

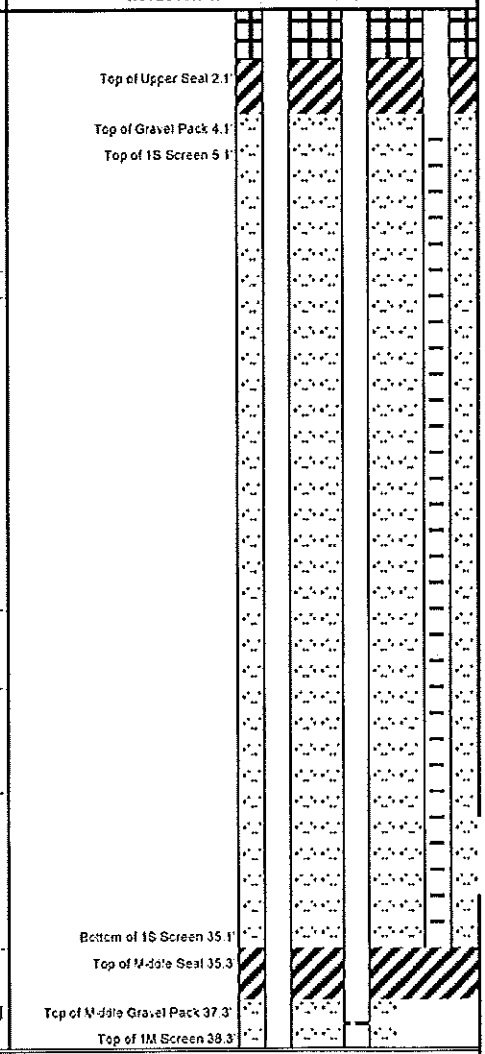

LEGEND:

SS - Split Spoon	*PID - Photoionization Detecto*	*HA - Hand Auger*
CU -Cuttings Sample	*PP - Pocket Penetrometer*	*WB - Wash Bore*
ST - Shelby Tube	*HSA - Hollow Stem Augers*	*RB - Rock Bit*
	AR - Air Rotary	*NX - Rock Core*

THE STRATIFICATION LINES REPRESENT APPROXIMATE BOUNDARY LINES BETWEEN SOIL AND ROCK TYPES: IN-SITU, THE TRANSITION MAY BE GRADUAL.

TMP-1S, TMP-1M AND TMP-1D

AQUATERRA

Environmental Solutions, Inc.

13 Executive Dr. Suite 1 Fairview Heights IL 62208

LOG OF BORING NO.	TMP-1	SHEET NUMBER	2 of 2
GEOLOGIST:	T.Pool, C. Joyce		
CLIENT:	Republic Services, Inc.	DATE:	08/20/12
PROJECT NAME:	Bridgeton Landfill	PROJECT NUMBER:	4788.1

SAMPLE NUMBER	SAMPLE TYPE	BLOW COUNT	RECOVERY (FT)	DEPTH IN FEET	USCS CLASS	SOIL DESCRIPTION AND DRILLING CONDITIONS	NOTES:	TMP-1D	TMP-1M	TMP-1S
				42		Fine clayey sand infiltrated through cracks in the limestone or beneath augers at RX interface overnight. Medium Bluish Gray (SB5/1)				
				44						
				46						
				48						
				50						
				52						
AR	CU			54	LMS		Bottom of 1M Screen 53.3'			
							Top of Lower Seal 53.5'			
				56		Unweathered LIMESTONE at 55.0'	Top of Gravel Pack 55.3'			
							Top of 1D Screen 56.3'			
				58						
				60						
				62						
				64						
				66			Bottom of 1D Screen 66.3			
				68		Boring Terminated @ 66.5'				
				70						
				72						
				74						
				76						
				78						
				80						
				82						
				84						
				86						
				88						
				90						

LEGEND:

SS - Split Spoon
CS - 5 foot CME Sampler
ST - Shelby Tube
PID - Photoionization Detecto
PP - Pocket Penetrometer
HSA - Hollow Stem Augers
AR - Air Rotary
HA - Hand Auger
WB - Wash Bore
RB - Rock Bit
NX - Rock Core

THE STRATIFICATION LINES REPRESENT APPROXIMATE BOUNDARY LINES BETWEEN SOIL AND ROCK TYPES: IN-SITU, THE TRANSITION MAY BE GRADUAL.

TMP-2S, TMP-2M AND TMP-2D

AQUATERRA
Environmental Solutions, Inc.
13 Executive Dr. Suite 1 Fairview Heights IL 62208

LOG OF BORING NO.: **TMP-2**

SHEET NUMBER 1 of 2

CLIENT:	Republic Services, Inc.
PROJECT NAME:	Bridgeton Landfill
PROJECT NUMBER:	4788.10
PROJECT LOCATION:	Maryland Heights, MO
BORING LOCATION:	N: 1066806 E: 515318
AES PROJECT NO:	4788.10
AES GEOLOGIST:	C. Joyce
START DATE	08/23/12 FINISH DATE 08/23/12
START TIME	FINISH TIME

DRILLING CONTRACTOR:	Roberts Environmental Drilling
DRILLER:	Patrick
DRILLING RIG:	Track Mounted CME-75
DRILLING METHOD:	10" ID HSA, 8" Air Rorary
SAMPLING METHOD:	Split Spoon, Cuttings
BORING DIAMETER:	12"/8"
WELL DIAMETER:	3x 1"
WELL COMPLETION:	Stick-Up
SURFACE ELEVATION:	457.9
TOC ELEVATION:	S-460.90; M-460.84; D-460.78
WATER LEVEL:	-
WATER ELEVATION:	-
DATE:	-

WELL CONSTRUCTION DETAILS

MATERIAL:	PVC	PVC	PVC
CASING DIAMETER:	1"	1"	1"
WELL TOTAL DEPTH:	47'	32	14'
SCREEN LENGTH:	10'	15'	10
RISER LENGTH:	39.9'	29	7.1'
TOP OF SCREEN:	36.8'	15.8'	3.8
BOTTOM OF SCREEN:	46.8'	31.8'	13.8'
SCREEN SLOT:	0.010 IN	0.010 IN	0.010 IN
TOP OF FILTER PACK:	35.8'	15.8'	2.8
TOP OF SEAL:	32	14'	1.8
TYPE OF SEAL:	3/8" Bentonite Chips		→
TYPE OF FILTER PACK:	12/20 Silica	TMP-1D	TMP-1M	TMP-1S

SAMPLE NUMBER	SAMPLE TYPE	BLOW COUNT	RECOVERY (FT)	DEPTH IN FEET	USCS CLASS	SOIL DESCRIPTION AND DRILLING CONDITIONS
HSA-1				2	FILL	Road Aggregate
				4	SC	Pale yellow-brown (10yr6/2) clayey SAND, moist
SS-1	SS		2.0	6	CL	Grayish brown (5yr3/2) fine sandy lean CLAY, Moist
HSA-2	CU			8		
SS-2	SS		2.0	10		Moderate brown (5yr4/4) fine sandy lean CLAY, moist
HSA-3	CU			12		
SS-3	SS		2.0	14		Moderate brown (5yr3/4) lean CLAY, moist
HSA-4				16		
AR	CU			18	LMS	Bedrock @ 18.0'
				20		Limestone more crystaline. Medium Gray N6, weathered surface, very pale orange (10yr8/2)
				22		
				24		Shaley Limestone. medium gray (N5), to light gray (N8)
				26		Weathered LMS, pale yellow-orange to light olive gray, dry (10yr8/6 to 5y 5/8)
				28		
				30		
				32		
				34		
				36		Limestone, medium light gray to medium gray N6 Weathered surfaces reddish gray (5gy6/1)
				38		
				40		

NOTES AND WELL CONSTRUCTION

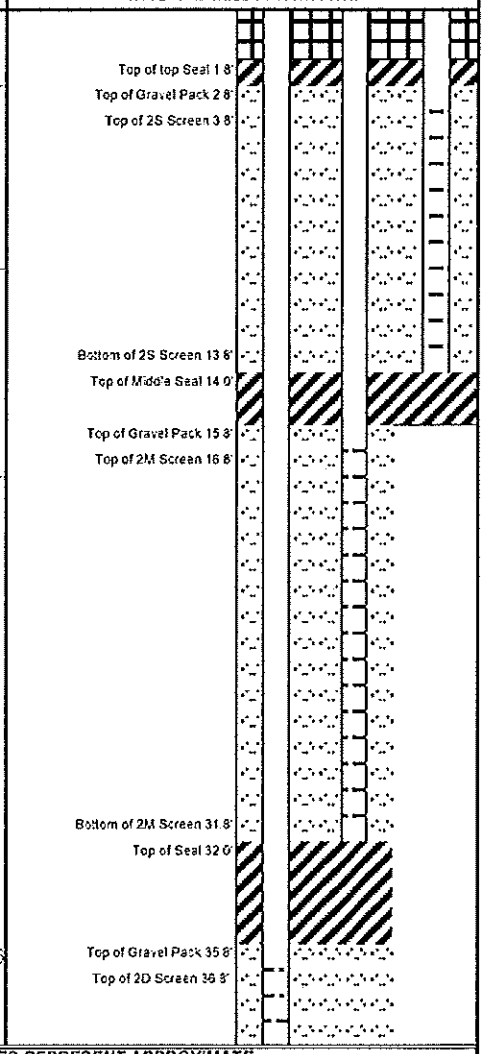

LEGEND:

SS - Split Spoon
CU - Cuttings Sample
ST - Shelby Tube
PID - Photoionization Detector
PP - Pocket Penetrometer
HSA - Hollow Stem Augers
AR - Air Rotary
HA - Hand Auger
WB - Wash Bore
RB - Rock Bit
NX - Rock Core

THE STRATIFICATION LINES REPRESENT APPROXIMATE BOUNDARY LINES BETWEEN SOIL AND ROCK TYPES: IN-SITU, THE TRANSITION MAY BE GRADUAL.

TMP-2S, TMP-2M AND TMP-2D

AQUATERRA

Environmental Solutions, Inc.

13 Executive Dr. Suite 1 Fairview Heights IL 62208

LOG OF BORING NO:	TMP-2	SHEET NUMBER	2 of 2
GEOLOGIST:	C. Joyce		
DATE:	08/28/12		
PROJECT NUMBER:	4788.1		
CLIENT:	Republic Services, Inc.		
PROJECT NAME:	Bridgeton Landfill		

SAMPLE NUMBER	SAMPLE TYPE	BLOW COUNT	RECOVERY (FT)	DEPTH IN FEET	USCS CLASS	SOIL DESCRIPTION AND DRILLING CONDITIONS	NOTES:	TMP-1D	TMP-1M	TMP-1S
AR	CU			42, 44, 46	LMS	Limestone med gray N6. Weathered Surfaces dusky yellow	Bottom of 2D Screen 46.8'			
				48, 50, 52, 54, 56, 58, 60, 62, 64, 66, 68, 70, 72, 74, 76, 78, 80, 82, 84, 86, 88, 90		Boring Terminated @ 47' BGS				

LEGEND:

SS - Split Spoon
CS - 5 foot CME Sampler
ST - Shelby Tube
PID - Photoionization Detecto
PP - Pocket Penetrometer
HSA - Hollow Stem Augers
AR - Air Rotary
HA - Hand Auger
WB - Wash Bore
RB - Rock Bit
NX - Rock Core

THE STRATIFICATION LINES REPRESENT APPROXIMATE BOUNDARY LINES BETWEEN SOIL AND ROCK TYPES: IN-SITU, THE TRANSITION MAY BE GRADUAL.

TMP-3S, TMP-3M AND TMP-3D

AQUATERRA
Environmental Solutions, Inc.

13 Executive Dr. Suite 1 Fairview Heights IL 62208

LOG OF BORING NO.: **TMP-3**

SHEET NUMBER 1 of 2

CLIENT:	Republic Services, Inc
PROJECT NAME:	Bridgeton Landfill
PROJECT NUMBER:	4788.10
PROJECT LOCATION	Maryland Heights, MO
BORING LOCATION:	N: 1066895 E: 515160
AES PROJECT NO:	4788.10
AES GEOLOGIST:	T.Pool, C. Joyce
START DATE	03/23/12 FINISH DATE 03/23/12
START TIME	FINISH TIME

DRILLING CONTRACTOR:	Roberts Environmental Drilling
DRILLER:	Patrick
DRILLING RIG:	Track Mounted CME-75
DRILLING METHOD:	8" HAS, 8" Air Rotary
SAMPLING METHOD:	Split Spoon, Cuttings
BORING DIAMETER:	10"/8"
WELL DIAMETER:	3x 1"
WELL COMPLETION:	Stick-Up
SURFACE ELEVATION:	456.1
TOC ELEVATION:	S-459.82, M-459.777; D-458.812
WATER LEVEL:	-
WATER ELEVATION:	-
DATE:	-

WELL CONSTRUCTION DETAILS

MATERIAL:	PVC	PVC	PVC
DIAMETER:	1"	1"	1"
WELL TOTAL DEPTH:	61'	48	28.5'
SCREEN LENGTH:	10'	15'	20'
RISER LENGTH:	53.6	35.7'	11.3'
TOP OF SCREEN:	50.8	32.8	8.3
BOTTOM OF SCREEN:	60.8	47.8	28.3
SCREEN SLOT:	0.010 IN	0.010 IN	0.010 IN
TOP OF FILTER PACK:	49.3	30.5	7.3
TOP OF SEAL:	48	29	3.5
TYPE OF SEAL:	3/8" Bentonite Chips		→
TYPE OF FILTER PACK:	12/20 Sand	TMP-3D	TMP-3M	TMP-3S

SAMPLE NUMBER	SAMPLE TYPE	BLOW COUNT	RECOVERY (FT)	DEPTH IN FEET	USCS CLASS	SOIL DESCRIPTION AND DRILLING CONDITIONS
HSA-1				2, 4	ML	Grass with Gravel
SS-1	SS		2.0	6		Brown with gray clayey SILT, dry
HSA-2	CU			8	CL	Brown silty CLAY, dry Trace Gravel at 8'
SS-2	SS		2.0	10		Brown silty CLAY, dry
HSA-3	CU			12, 14		
SS-3	SS		2.0	16		Dark brown silty CLAY, wet
HSA-4	CU			18, 20		
SS-4	SS		2.0			Gray silty CLAY, moist
HSA-5	CU			22, 24	ML	Gray sandy, clayey SILT saturated
SS-5	SS		2.0	26		Gray sandy SILT, moist
HSA-6	CU			28, 30		
SS-6	SS		2.0			Bit Refusal
						Bedrock @ 31.0'
AR	CU			32, 34, 36, 38, 40	LMS	Gray weathered LIMESTONE, wet End of TP Log, CJ resumes on 8/28/2012

NOTES AND WELL CONSTRUCTION

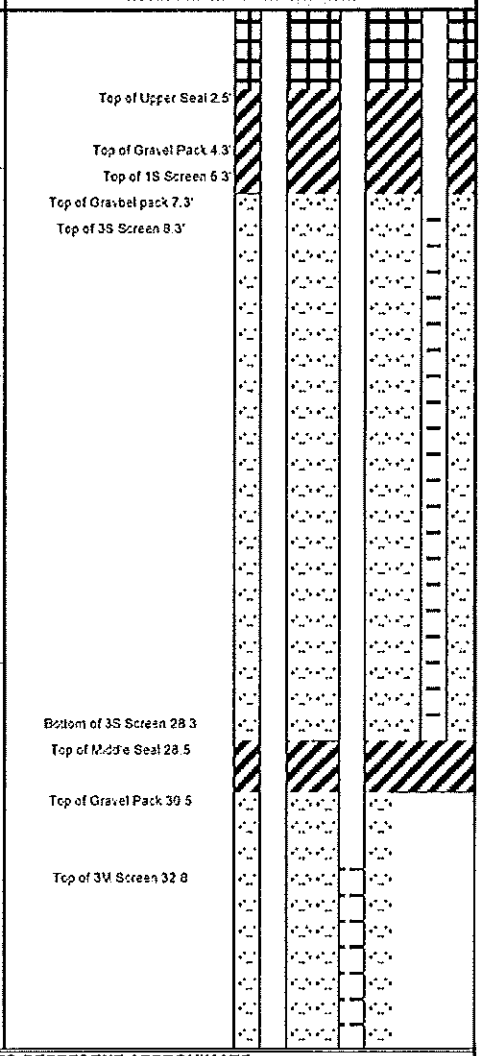

LEGEND:

SS - Split Spoon
CU - Cuttings Sample
ST - Shelby Tube
PID - Photoionization Detecto
PP - Pocket Penetrometer
HSA - Hollow Stem Augers
AR - Air Rotary
HA - Hand Auger
WB - Wash Bore
RB - Rock Bit
NX - Rock Core

THE STRATIFICATION LINES REPRESENT APPROXIMATE BOUNDARY LINES BETWEEN SOIL AND ROCK TYPES: IN-SITU, THE TRANSITION MAY BE GRADUAL.

TMP-3S, TMP-3M AND TMP-3D

AQUATERRA
Environmental Solutions, Inc.
13 Executive Dr. Suite 1 Fairview Heights IL 62208

LOG OF BORING NO.	**TMP-3**	SHEET NUMBER	2 of 2
GEOLOGIST:	T.Pool, C. Joyce		
CLIENT:	Republic Services, Inc.	DATE:	08/23/12
PROJECT NAME	Bridgeton Landfill	PROJECT NUMBER:	4788.1

SAMPLER TYPE	LEL %	H2S (PPM)	RECOVERY (FT)	DEPTH IN FEET	USCS CLASS	SOIL DESCRIPTION AND DRILLING CONDITIONS	NOTES:	TMP-3D	TMP-3M	TMP-3S
				42		Gray weathered LIMESTONE, wet				
				44						
				46						
				48			Bottom of 3M Screen 47.8' Top of Bottom Seal 48'			
AR	CU			50	LMS	Limestone Competent, Medium Light Gray (N6) Thin shaley LMS	Top of Gravel Pack 49.8' Top of 3D Screen 50.8'			
				52						
				54						
				56						
				58						
				60			Bottom of 3D Screen 60.8'			
				62		Boring Terminated @ 61.0'				
				64						
				66						
				68						
				70						
				72						
				74						
				76						
				78						
				80						
				82						
				84						
				86						
				88						
				90						

LEGEND:

SS - Split Spoon	*PID - Photoionization Detecto*	*HA - Hand Auger*
CS - 5 foot CME Sampler	*PP - Pocket Penetrometer*	*WB - Wash Bore*
ST - Shelby Tube	*HSA - Hollow Stem Augers*	*RB - Rock Bit*
	AR - Air Rotary	*NX - Rock Core*

THE STRATIFICATION LINES REPRESENT APPROXIMATE BOUNDARY LINES BETWEEN SOIL AND ROCK TYPES: IN-SITU, THE TRANSITION MAY BE GRADUAL.

MISSOURI DEPARTMENT OF NATURAL RESOURCES
DIVISION OF GEOLOGY AND LAND SURVEY
(573) 368-2165

MONITORING WELL AND ENVIRONMENTAL INJECTION WELL RECORD

REF NO 00206789	DATE RECEIVED 10/15/1999	PUBLIC SAFETY PROBE GMP-09	
CR NO			
STATE CERT NO APPROVED DATE A082738 01/05/2000	CHECK NO. 8706629		
DATE ENTERED PHASE 1 PHASE 2 PHASE 3 10/18/1999 01/01/1000 02/17/2006	ROUTE PCD	REVENUE NO. 102799	

INFORMATION SUPPLIED BY WELL OR PUMP INSTALLATION CONTRACTOR

OWNER NAME: BRIDGETON LANDFILL AUTHORITY
TELEPHONE (OPTIONAL):
DNR VARIANCE NUMBER 833 — Applicable only if variance was obtained from DNR
OWNER ADDRESS: 13570 ST CHARLES ROCK RD
CITY: BRIDGETON
STATE: MO
ZIP: 63042
SITE NAME: GMP-9,
CONTACT NAME:
SITE ADDRESS (IF DIFFERENT THAN ABOVE):
CITY:
STATE: MO
ZIP:

PROPOSED USE OF WELL

[X] MONITORING [ ] GAS MONITORING [ ] EXTRACTION [ ] RETURN OR INJECTION (UIC PERMIT MAY BE NEEDED) [ ] WATER LEVEL MEASUREMENT (only)

TYPE OF SURFACE COMPLETION

[X] ABOVE GROUND [ ] FLUSH CASE LENGTH 60.0 IN. CASE HOLE DEPTH 576.0 IN.

PROTECTIVE CASE MATERIAL [X] STEEL [ ] ALUMINUM [ ] PLASTIC [ ] OTHER CASE DIAMETER 6.0 IN. CASE HOLE DIAMETER 2.0 IN.

CONSTRUCTION

RISER PIPE DIAMETER 1.0 IN. RISER PIPE LENGTH 12.0 FT. RISER HOLE DIAMETER 6.0 IN.
RISER PIPE MATERIAL [X] PLASTIC [ ] STEEL [ ] PTFE [ ] OTHER
RISER PIPE WEIGHT [ ] SCH40 [X] SCH80 [ ] 304/316 [ ] OTHER
DRILLING METHOD [ ] AUGER [ ] PUSH [ ] OTHER

SCREEN DIAMETER 1.0 IN. SCREEN LENGTH 30.0 FT. BENTONITE SEAL LENGTH 3.0 FT.
SCREEN MATERIAL [ ] PLASTIC [ ] STEEL [ ] PTFE [ ] OTHER
SCREEN HOLE DIAMETER IF DIFFERENT FROM RISER 6.0 IN.
SEAL ABOVE SWL [ ] SEAL BELOW SWL [ ] SEAL ABOVE SWL WAS HYDRATED [ ]

PRIMARY FILTER PACK LENGTH 32.0 FT. PRIMARY FILTER MATERIAL [ ] SAND [ ] PREPACKED
SECONDARY FILTER PACK LENGTH 0.0 FT.

ANNULAR SEAL LENGTH 1.0 FT. ANNULAR SEAL MATERIAL [ ] BENTONITE SLURRY [ ] NEAT CEMENT GROUT
ANNULAR SEAL PLACED BY [ ] TREMIE [ ] GRAVITY [ ] PRESSURE GROUT THRU TREMIE
[ ] CEMENT BENTONITE GROUT [X] NON-SLURRY BENTONITE [ ] OTHER
IF NON-SLURRY BENTONITE [X] CHIPS [ ] GRANULAR [ ] PELLETS [ ] OTHER

[ ] MULTIPLE CASED OR NESTED WELLS
ATTACH AS-BUILT DIAGRAMS showing constructions details with type, length and diameter of material and length and diameter of bores

LOCATION OF WELL

LAT. 0° 0' 0.0" COUNTY
LONG. 0° 0' 0.0" ST LOUIS COUNTY
Please be aware that we do not guarantee the accuracy of the data. It is submitted to us by a third party and has not been field verified.

(OPTIONAL) ELEVATION 475 FT.
LEGAL LOCATION (OPTIONAL) 1/4 1/4 1/4 SEC. 0 TWN. 0 RNG. 0 E

DEPTH FROM	DEPTH TO	FORMATION DESCRIPTION
0	15	SILTY CLAY
15	20	CLAY
20	40	LS WITH CHERT

TOTAL DEPTH 40.0 FEET

FIRST ENCOUNTER GROUNDWATER 0.0 FT
STATIC WATER LEVEL (swl) 0.0 FT
WELL COMPLETION DATE 07/22/1999
PUMP SET DEPTH FT
WELL YIELD 0.0 GPM
PUMP INSTALLATION DATE
OTHER INFORMATION OR LOCATION DATA (OPTIONAL)

I HEREBY CERTIFY THE WELL/PUMP INFORMATION DESCRIBED HEREIN IS TRUE AND ACCURATE

PRIMARY CONTRACTOR SIGNATURE x WARD HERST	PERMIT NUMBER 002702	DATE
WELL DRILLER SIGNATURE x JOHN PHILLIPS	PERMIT NUMBER 002883	DATE
PUMP INSTALLER SIGNATURE pump info required for extraction/recovery wells x	PERMIT NUMBER	DATE
APPRENTICE WELL DRILLER SIGNATURE x	PERMIT NUMBER	DATE

COPY

MISSOURI DEPARTMENT OF NATURAL RESOURCES
DIVISION OF GEOLOGY AND LAND SURVEY
(573) 368-2165

MONITORING WELL AND ENVIRONMENTAL INJECTION WELL RECORD

REF NO	DATE RECEIVED	
00206790	10/15/1999	PUBLIC SAFETY PROBE GMP-10
CR NO		
STATE CERT NO APPROVED DATE A082774 03/22/2000	CHECK NO. 8706629	
DATE ENTERED PHASE 1 PHASE 2 PHASE 3 10/18/1999 01/01/1000 02/17/2006	ROUTE PCD	REVENUE NO. 102799

INFORMATION SUPPLIED BY WELL OR PUMP INSTALLATION CONTRACTOR

OWNER NAME: BRIDGETON LANDFILL AUTHORITY
TELEPHONE (OPTIONAL):
DNR VARIANCE NUMBER: _____ Applicable only if variance was obtained from DNR

OWNER ADDRESS: 13570 ST CHARLES ROCK RD
CITY: BRIDGETON
STATE: MO
ZIP: 63042

SITE NAME: GMP-10,
CONTACT NAME:

SITE ADDRESS (IF DIFFERENT THAN ABOVE):
CITY:
STATE: MO
ZIP:

PROPOSED USE OF WELL

[X] MONITORING [ ] GAS MONITORING [ ] EXTRACTION [ ] RETURN OR INJECTION (UIC PERMIT MAY BE NEEDED) [ ] WATER LEVEL MEASUREMENT (only)

TYPE OF SURFACE COMPLETION

[X] ABOVE GROUND [ ] FLUSH CASE LENGTH 60.0 IN. CASE HOLE DEPTH 576.0 IN.

PROTECTIVE CASE MATERIAL [X] STEEL [ ] ALUMINUM [ ] PLASTIC [ ] OTHER CASE DIAMETER 6.0 IN. CASE HOLE DIAMETER 2.0 IN.

CONSTRUCTION

RISER PIPE DIAMETER 1.0 IN. RISER PIPE LENGTH 12.0 FT. RISER HOLE DIAMETER 6.0 IN.

RISER PIPE MATERIAL [X] PLASTIC [ ] STEEL [ ] PTFE [ ] OTHER

RISER PIPE WEIGHT [ ] SCH40 [X] SCH80 [ ] 304/316 [ ] OTHER

DRILLING METHOD [ ] AUGER [ ] PUSH [ ] OTHER

SCREEN DIAMETER 1.0 IN. SCREEN LENGTH 30.0 FT. SCREEN HOLE DIAMETER IF DIFFERENT FROM RISER 6.0 IN.

SCREEN MATERIAL [ ] PLASTIC [ ] STEEL [ ] PTFE [ ] OTHER

BENTONITE SEAL LENGTH 3.0 FT. SEAL ABOVE SWL [ ] SEAL BELOW SWL [ ] SEAL ABOVE SWL WAS HYDRATED [ ]

PRIMARY FILTER PACK LENGTH 32.0 FT. PRIMARY FILTER MATERIAL [ ] SAND [ ] PREPACKED

SECONDARY FILTER PACK LENGTH 0.0 FT.

ANNULAR SEAL LENGTH 1.0 FT. ANNULAR SEAL MATERIAL [ ] BENTONITE SLURRY [ ] NEAT CEMENT GROUT

ANNULAR SEAL PLACED BY [ ] TREMIE [ ] GRAVITY [ ] PRESSURE GROUT THRU TREMIE

[ ] CEMENT BENTONITE GROUT [X] NON-SLURRY BENTONITE [ ] OTHER

IF NON-SLURRY BENTONITE [X] CHIPS [ ] GRANULAR [ ] PELLETS [ ] OTHER

[ ] MULTIPLE CASED OR NESTED WELLS

ATTACH AS-BUILT DIAGRAMS showing constructions details with type, length and diameter of material and length and diameter of bores

LOCATION OF WELL

LAT. 0° 0' 0.0" COUNTY
LONG. 0° 0' 0.0" ST LOUIS COUNTY

Please be aware that we do not guarantee the accuracy of the data. It is submitted to us by a third party and has not been field verified.

(OPTIONAL) ELEVATION 0 FT.

LEGAL LOCATION (OPTIONAL) 1/4 1/4 1/4 SEC. 0 TWN. 0 RNG. 0 E

DEPTH FROM	DEPTH TO	FORMATION DESCRIPTION
0	15	SILTY CLAY
15	40	LS WITH CHERT

TOTAL DEPTH 40.0 FEET

FIRST ENCOUNTER GROUNDWATER 0.0 FT
STATIC WATER LEVEL (swl) 0.0 FT
WELL COMPLETION DATE 07/22/1999
PUMP SET DEPTH FT
WELL YIELD 0.0 GPM
PUMP INSTALLATION DATE

OTHER INFORMATION OR LOCATION DATA (OPTIONAL)

I HEREBY CERTIFY THE WELL/PUMP INFORMATION DESCRIBED HEREIN IS TRUE AND ACCURATE

	PERMIT NUMBER	DATE
PRIMARY CONTRACTOR SIGNATURE x WARD HERST	002702	
WELL DRILLER SIGNATURE x JOHN PHILLIPS	002883	
PUMP INSTALLER SIGNATURE pump info required for extraction/recovery wells x		
APPRENTICE WELL DRILLER SIGNATURE x		

COPY

MISSOURI DEPARTMENT OF NATURAL RESOURCES
DIVISION OF GEOLOGY AND LAND SURVEY
(573) 368-2165

MONITORING WELL AND ENVIRONMENTAL INJECTION WELL RECORD

REF NO 00206791	DATE RECEIVED 10/15/1999	PUBLIC SAFETY PROBE GMP-11
CR NO		
STATE CERT NO A082773	APPROVED DATE 03/22/2000	CHECK NO. 8706629
DATE ENTERED PHASE 1 10/18/1999 PHASE 2 01/01/1000 PHASE 3 02/17/2006	ROUTE PCD	REVENUE NO. 102799

INFORMATION SUPPLIED BY WELL OR PUMP INSTALLATION CONTRACTOR

OWNER NAME: BRIDGETON LANDFILL AUTHORITY
TELEPHONE (OPTIONAL):
DNR VARIANCE NUMBER 833 — Applicable only if variance was obtained from DNR

OWNER ADDRESS: 13570 ST CHARLES ROCK RD
CITY: BRIDGETON
STATE: MO
ZIP: 63042

SITE NAME: GMP-11,
CONTACT NAME:

SITE ADDRESS (IF DIFFERENT THAN ABOVE):
CITY:
STATE: MO
ZIP:

PROPOSED USE OF WELL

[X] MONITORING [ ] GAS MONITORING [ ] EXTRACTION [ ] RETURN OR INJECTION (UIC PERMIT MAY BE NEEDED) [ ] WATER LEVEL MEASUREMENT (only)

TYPE OF SURFACE COMPLETION

[X] ABOVE GROUND [ ] FLUSH CASE LENGTH 60.0 IN. CASE HOLE DEPTH 576.0 IN.

PROTECTIVE CASE MATERIAL [X] STEEL [ ] ALUMINUM [ ] PLASTIC [ ] OTHER CASE DIAMETER 6.0 IN. CASE HOLE DIAMETER 2.0 IN.

CONSTRUCTION

RISER PIPE DIAMETER 1.0 IN. RISER PIPE LENGTH 12.0 FT. RISER HOLE DIAMETER 6.0 IN.

RISER PIPE MATERIAL [X] PLASTIC [ ] STEEL [ ] PTFE [ ] OTHER
RISER PIPE WEIGHT [X] SCH40 [ ] SCH80 [ ] 304/316 [ ] OTHER
DRILLING METHOD [ ] AUGER [ ] PUSH [ ] OTHER

SCREEN DIAMETER 1.0 IN. SCREEN LENGTH 50.0 FT.
SCREEN MATERIAL [ ] PLASTIC [ ] STEEL [ ] PTFE [ ] OTHER
SCREEN HOLE DIAMETER IF DIFFERENT FROM RISER 6.0 IN.

BENTONITE SEAL LENGTH 3.0 FT.
SEAL ABOVE SWL [ ] SEAL BELOW SWL [ ]
SEAL ABOVE SWL WAS HYDRATED [ ]

PRIMARY FILTER PACK LENGTH 52.0 FT.
SECONDARY FILTER PACK LENGTH 0.0 FT.
PRIMARY FILTER MATERIAL [ ] SAND [ ] PREPACKED

ANNULAR SEAL LENGTH 1.0 FT.
ANNULAR SEAL PLACED BY [ ] TREMIE [ ] GRAVITY [ ] PRESSURE GROUT THRU TREMIE
ANNULAR SEAL MATERIAL [ ] BENTONITE SLURRY [ ] NEAT CEMENT GROUT [ ] CEMENT BENTONITE GROUT [X] NON-SLURRY BENTONITE [ ] OTHER
IF NON-SLURRY BENTONITE [X] CHIPS [ ] GRANULAR [ ] PELLETS [ ] OTHER

[ ] MULTIPLE CASED OR NESTED WELLS
ATTACH AS-BUILT DIAGRAMS showing constructions details with type, length and diameter of material and length and diameter of bores

LOCATION OF WELL

LAT. 0° 0' 0.0" COUNTY
LONG. 0° 0' 0.0" ST LOUIS COUNTY

Please be aware that we do not guarantee the accuracy of the data. It is submitted to us by a third party and has not been field verified.

(OPTIONAL)
ELEVATION 0 FT.

LEGAL LOCATION (OPTIONAL)
1/4 1/4 1/4
SEC. 0 TWN. 0 RNG. 0 E

DEPTH FROM	DEPTH TO	FORMATION DESCRIPTION
0	15	SILTY CLAY
15	60	LS WITH CHERT

TOTAL DEPTH 60.0 FEET

FIRST ENCOUNTER GROUNDWATER 0.0 FT
STATIC WATER LEVEL (swl) 0.0 FT
WELL COMPLETION DATE 07/26/1999
PUMP SET DEPTH FT
WELL YIELD 0.0 GPM
PUMP INSTALLATION DATE

OTHER INFORMATION OR LOCATION DATA (OPTIONAL)

I HEREBY CERTIFY THE WELL/PUMP INFORMATION DESCRIBED HEREIN IS TRUE AND ACCURATE

	PERMIT NUMBER	DATE
PRIMARY CONTRACTOR SIGNATURE x WARD HERST	002702	
WELL DRILLER SIGNATURE x JOHN PHILLIPS	002883	
PUMP INSTALLER SIGNATURE pump info required for extraction/recovery wells x		
APPRENTICE WELL DRILLER SIGNATURE x		

COPY

MISSOURI DEPARTMENT OF NATURAL RESOURCES
DIVISION OF GEOLOGY AND LAND SURVEY
(573) 368-2165

MONITORING WELL AND ENVIRONMENTAL INJECTION WELL RECORD

REF NO	DATE RECEIVED	
00206788	10/15/1999	PUBLIC SAFETY PROBE GMP-12
CR NO		
STATE CERT NO APPROVED DATE A082772 03/22/2000	CHECK NO. 8706629	
DATE ENTERED PHASE 1 PHASE 2 PHASE 3 10/18/1999 01/01/1000 02/17/2006	ROUTE PCD	REVENUE NO. 102799

INFORMATION SUPPLIED BY WELL OR PUMP INSTALLATION CONTRACTOR

OWNER NAME: BRIDGETON LANDFILL AUTH
TELEPHONE (OPTIONAL):
DNR VARIANCE NUMBER 833 — Applicable only if variance was obtained from DNR

OWNER ADDRESS: 13570 ST CHARLES ROCK RD
CITY: BRIDGETON
STATE: MO
ZIP: 63042

SITE NAME: GMP-12,
CONTACT NAME:

SITE ADDRESS (IF DIFFERENT THAN ABOVE):
CITY:
STATE: MO
ZIP:

PROPOSED USE OF WELL

[X] MONITORING [ ] GAS MONITORING [ ] EXTRACTION [ ] RETURN OR INJECTION (UIC PERMIT MAY BE NEEDED) [ ] WATER LEVEL MEASUREMENT (only)

TYPE OF SURFACE COMPLETION

[X] ABOVE GROUND [ ] FLUSH CASE LENGTH 60.0 IN. CASE HOLE DEPTH 576.0 IN.

PROTECTIVE CASE MATERIAL [X] STEEL [ ] ALUMINUM [ ] PLASTIC [ ] OTHER CASE DIAMETER 6.0 IN. CASE HOLE DIAMETER 2.0 IN.

CONSTRUCTION

RISER PIPE DIAMETER 1.0 IN. RISER PIPE LENGTH 10.0 FT. RISER HOLE DIAMETER 6.0 IN.

RISER PIPE MATERIAL [X] PLASTIC [ ] STEEL [ ] PTFE [ ] OTHER

RISER PIPE WEIGHT [ ] SCH40 [X] SCH80 [ ] 304/316 [ ] OTHER

DRILLING METHOD [ ] AUGER [ ] PUSH [ ] OTHER

SCREEN DIAMETER 1.0 IN. SCREEN LENGTH 70.0 FT. BENTONITE SEAL LENGTH 3.0 FT.

SCREEN MATERIAL [ ] PLASTIC [ ] STEEL [ ] PTFE [ ] OTHER

SCREEN HOLE DIAMETER IF DIFFERENT FROM RISER 6.0 IN.

SEAL ABOVE SWL [ ] SEAL BELOW SWL [ ]
SEAL ABOVE SWL WAS HYDRATED [ ]

PRIMARY FILTER PACK LENGTH 71.0 FT. PRIMARY FILTER MATERIAL [ ] SAND [ ] PREPACKED
SECONDARY FILTER PACK LENGTH 0.0 FT.

ANNULAR SEAL LENGTH 2.0 FT. ANNULAR SEAL MATERIAL [ ] BENTONITE SLURRY [ ] NEAT CEMENT GROUT
ANNULAR SEAL PLACED BY [ ] TREMIE [ ] GRAVITY [ ] PRESSURE GROUT THRU TREMIE
[ ] CEMENT BENTONITE GROUT [X] NON-SLURRY BENTONITE [ ] OTHER
IF NON-SLURRY BENTONITE [X] CHIPS [ ] GRANULAR [ ] PELLETS [ ] OTHER

[ ] MULTIPLE CASED OR NESTED WELLS
ATTACH AS-BUILT DIAGRAMS showing constructions details with type, length and diameter of material and length and diameter of bores

LOCATION OF WELL

LAT. 0° 0' 0.0" COUNTY
LONG. 0° 0' 0.0" ST LOUIS COUNTY

Please be aware that we do not guarantee the accuracy of the data. It is submitted to us by a third party and has not been field verified.

(OPTIONAL) ELEVATION 0 FT.

LEGAL LOCATION (OPTIONAL) 1/4 1/4 1/4
SEC. 0 TWN. 0 RNG. 0 E

DEPTH FROM	DEPTH TO	FORMATION DESCRIPTION
0	4	SILTY CLAY
4	11	BROWN SAND
11	15	GRAY SAND
15	60	BROKEN LS
60	80	SHALE & LS

TOTAL DEPTH 80.0 FEET

FIRST ENCOUNTER GROUNDWATER 0.0 FT
STATIC WATER LEVEL (swl) 0.0 FT
WELL COMPLETION DATE 07/28/1999
PUMP SET DEPTH FT
WELL YIELD 0.0 GPM
PUMP INSTALLATION DATE

OTHER INFORMATION OR LOCATION DATA (OPTIONAL)

I HEREBY CERTIFY THE WELL/PUMP INFORMATION DESCRIBED HEREIN IS TRUE AND ACCURATE

	PERMIT NUMBER	DATE
PRIMARY CONTRACTOR SIGNATURE x WARD HERST	002702	
WELL DRILLER SIGNATURE x JOHN PHILLIPS	002883	
PUMP INSTALLER SIGNATURE pump info required for extraction/recovery wells x		
APPRENTICE WELL DRILLER SIGNATURE x		

COPY

PUBLIC SAFETY PROBE

Well No. PZ-204-SS

Boring No. X-Ref: PZ-204-SS

PIEZOMETER CONSTRUCTION SUMMARY

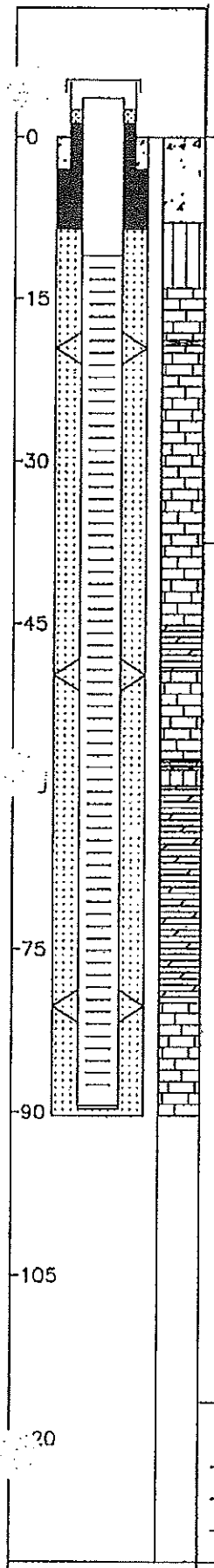

Not to Scale

Survey Coords: Northing: 1066427 ft. Easting: 515533 ft.

Elevation Ground Level 467.0 ft. NGVD

Top of PVC Casing 469.63 ft. NGVD

Drilling Summary:

Total Depth 90.3 ft.

Borehole Diameter 10 1/4 in. (0.0-14.0 ft.) 5 7/8 in. (14.0-90.3 ft.)

Casing Stickup Height 2.60 ft.

Driller Layne-Western St. Louis, MO

Rig CME 75, Schramm Portadrill T660H

Bit(s) 6 1/4 in. ID Hollow Stem Auger Bit, NX Core, 5 7/8 in. Button Bit for Reaming

Drilling Fluid Auger-None, NX Core Water, Air Rotary

Protective Casing 8x8 in. Square Steel, by 5 ft. long

Construction Time log:

Task	Start Date	Start Time	Finish Date	Finish Time
Drilling				
CME 75	3/7/95	15:50	3/8/95	7:45
Schramm Rotary	3/10/95	12:15	3/10/95	14:15
Geophys.Logging:				
Casing:	3/10/95	14:15	3/10/95	14:35
Filter Placement:	3/10/95	14:35	3/10/95	15:05
Cementing:				
Development				
Bentonite Grout				
Bentonite Seal	3/10/95	15:05	3/10/95	15:15

Well Design & Specifications

Basis: Geologic Log X Geophysical Log

Casing string(s): C = Casing S = Screen

Depth			String(s)	Elevation		
+ 2.60	-	10.95	C1	469.63	-	456.08
10.95	-	89.35	S1	456.08	-	377.68
89.35	-	89.68	C2	377.68	-	377.35

Casing: C1 2 in. dia. Schedule 80 PVC, flush threaded with O-rings

C2 2 in. dia. threaded PVC end cap (4 in. long or 0.33 ft.)

Screen: S1 2 in. dia. Schedule 80 PVC, 0.010 in. machine cut slot, flush threaded with O-rings

Sand Pack: 16-35 mesh Silica Sand, 8.5-90.3 ft.

Filter Pack:

Grout Seal:

Bentonite Seal: Medium Bentonite Chips, 3.0-8.5 ft.

Concrete: 0.0-3.0 ft.

Well Development

Stabilization Test Data:

Time	pH	Spec. Cond.	Temp (°C)

Recovery Data:

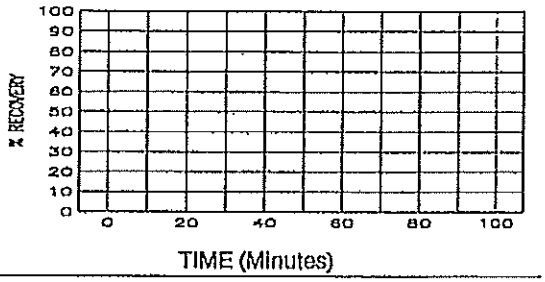

Comments:

Supervised by B. Tilton

Job Number 943-2848

Site LAIDLAW/OU2 RI-FS/MO

File Name PZ204SS

PUBLIC SAFETY PROBE

Well No. PZ-204A-SS

Boring No. X-Ref: PZ-204A-SS

PIEZOMETER CONSTRUCTION SUMMARY

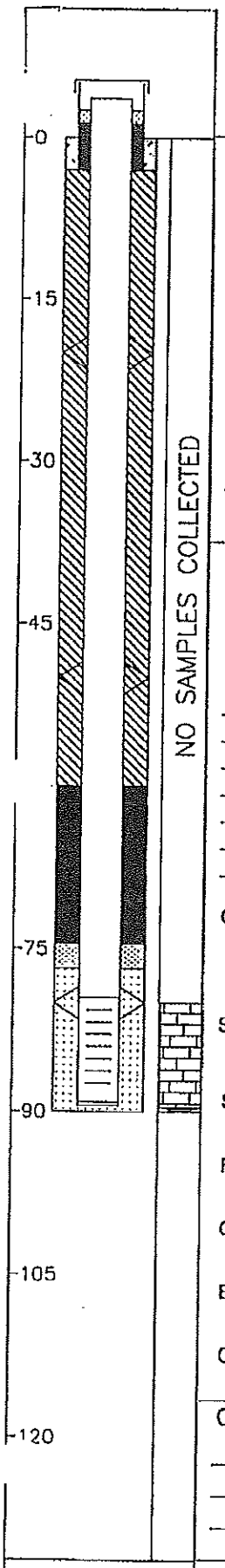

Not to Scale

Survey Coords: Northing: 1066430 ft. Easting: 515556 ft.

Elevation Ground Level 466.7 ft. NGVD

Top of PVC Casing 468.16 ft. NGVD

Drilling Summary:

Total Depth 90.0 ft.

Borehole Diameter 10 1/4 in. (0.0-14.0 ft.) 5 7/8 in. (14.0-90.0 ft.)

Casing Stickup Height 1.50 ft.

Driller Layne-Western St. Louis, MO

Rig CME 75, Schramm Portadrill T660H

Bit(s) 6 1/4 in. ID Hollow Stem Auger Bit, NX Core, 5 7/8 in. Button Bit for Reaming

Drilling Fluid Auger-None, NX Core Water, Air Rotary

Protective Casing 8x8 in. Square Steel, by 5 ft. long

Construction Time log:

Task	Start Date	Start Time	Finish Date	Finish Time
Drilling				
CME 75				
Schramm Rotary	6/21/95	8:00	6/21/95	14:00
Geophys.Logging:				
Casing:	6/22/95	7:30	6/22/95	7:35
Filter Placement:	6/22/95	7:35	6/22/95	7:45
Cementing:				
Development				
Bentonite Grout	6/22/95	8:00	6/22/95	9:00
Bentonite Seal	6/22/95	7:45	6/22/95	8:00

Well Design & Specifications

Basis: Geologic Log X Geophysical Log

Casing string(s): C = Casing S = Screen

Depth			String(s)	Elevation		
+ 1.50	-	79.50	C1	468.16	-	387.16
79.50	-	89.10	S1	387.16	-	377.56
89.10	-	89.43	C2	377.56	-	377.23

Casing: C1 2 in. dia. Schedule 80 PVC, flush threaded with O-rings

C2 2 in. dia. threaded PVC end cap (4 in. long or 0.33 ft.)

Screen: S1 2 in. dia. Schedule 80 PVC, 0.010 in. machine cut slot, flush threaded with O-rings

Sand Pack: 16-35 mesh Silica Sand, 76.8-90.0 ft.

Filter Pack: Less than 50 mesh Silica Sand, 74.5-76.8 ft.

Grout Seal: Wyo-Ben Grout Well Bentonite Slurry, 3.0-60.0 ft.

Bentonite Seal: Extra high yield Wyo-Ben (100%) Slurry, 60.0-74.5 ft.

Concrete: 0.0-3.0 ft.

Well Development

Stabilization Test Data:

Time	pH	Spec. Cond.	Temp (°C)

Recovery Data:

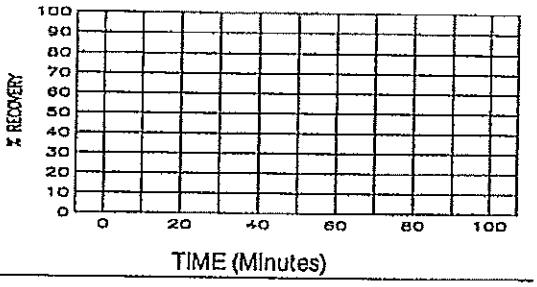

Comments:

Supervised by B. Tilton

Job Number 943-2848

Site LAIDLAW/OU2 RI-FS/MO

File Name PZ204ASS

APPENDIX C

BRIDGETON LANDFILL INFRASTRUCTURE AS-BUILT DRAWING, JULY 2013

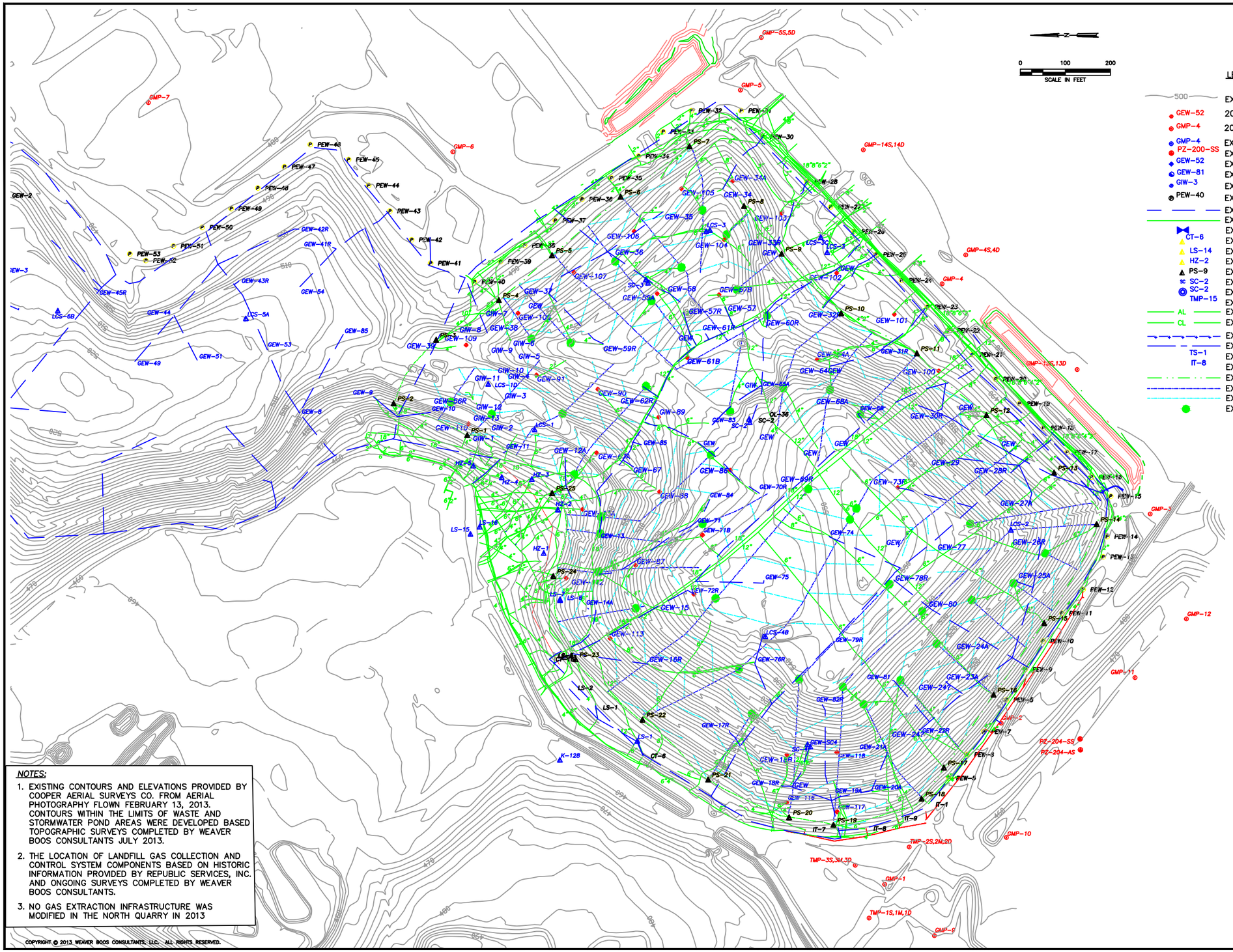

LEGEND

- 500 — EXISTING CONTOUR
- GEW-52 — 2013 INSTALLED LFG EXTRACTION WELL
- GMP-4 — 2012 INSTALLED GAS PROBE
- GMP-4 — EXISTING GAS PROBE
- PZ-200-SS — EXISTING MONITORING WELL
- GEW-52 — EXISTING LFG EXTRACTION WELL
- GEW-81 — EXISTING DUAL LFG EXTRACTION WELL
- GIW-3 — EXISTING LFG INTERCEPTOR WELL
- PEW-40 — EXISTING PERIMETER LFG EXTRACTION WELL
- EXISTING BURIED LFG COLLECTION PIPING
- EXISTING ABOVEGROUND LFG COLLECTION PIPING
- CT-6 — EXISTING LFG ISOLATION VALVE
- EXISTING CONDENSATE SUMP
- LS-14 — EXISTING LEACHATE COLLECTION SUMP
- HZ-2 — EXISTING HORIZONTAL COLLECTION SUMP
- PS-9 — EXISTING PERIMETER SUMP
- SC-2 — EXISTING LEACHATE COLLECTION SUMP
- SC-2 — EXISTING SURFACE COLLECTOR
- TMP-15 — EXISTING TEMPERATURE MONITORING PROBE
- AL — EXISTING AIR LINE
- CL — EXISTING CONDENSATE FORCEMAIN
- EXISTING INTERCEPTION TRENCH
- EXISTING BUBBLE SUCKER
- TS-1 — EXISTING TRENCH SUMP
- IT-8 — EXISTING INTERCEPTION TRENCH WELL
- EXISTING TOE DRAIN
- EXISTING TRENCH DRAIN
- EXISTING STRIP DRAIN
- EXISTING WELL HEAD RISER

NOTES:

1. EXISTING CONTOURS AND ELEVATIONS PROVIDED BY COOPER AERIAL SURVEYS CO. FROM AERIAL PHOTOGRAPHY FLOWN FEBRUARY 13, 2013. CONTOURS WITHIN THE LIMITS OF WASTE AND STORMWATER POND AREAS WERE DEVELOPED BASED TOPOGRAPHIC SURVEYS COMPLETED BY WEAVER BOOS CONSULTANTS JULY 2013.
2. THE LOCATION OF LANDFILL GAS COLLECTION AND CONTROL SYSTEM COMPONENTS BASED ON HISTORIC INFORMATION PROVIDED BY REPUBLIC SERVICES, INC. AND ONGOING SURVEYS COMPLETED BY WEAVER BOOS CONSULTANTS.
3. NO GAS EXTRACTION INFRASTRUCTURE WAS MODIFIED IN THE NORTH QUARRY IN 2013

COPYRIGHT © 2013 WEAVER BOOS CONSULTANTS, LLC. ALL RIGHTS RESERVED.

LFG IMPROVEMENTS 2013

BRIDGETON LANDFILL
BRIDGETON, MISSOURI

PREPARED FOR

BRIDGETON LANDFILL, LLC

REVISIONS

NO.	DATE	DESCRIPTION

- [ ] DRAFT
- [x] FOR INFORMATIONAL PURPOSES ONLY
- [ ] ISSUED FOR CONSTRUCTION
- [ ] CLIENT APPROVAL BY: _____

DATE: 07/2013
FILE: 0120-131-52
CAD: 1-SITE PLAN.DWG

DRAWN BY: RJS
DESIGN BY: CC
REVIEWED BY: MC

REUSE OF DOCUMENTS
THIS DOCUMENT, AND THE DESIGNS INCORPORATED HEREIN, AS AN INSTRUMENT OF PROFESSIONAL SERVICE, IS THE PROPERTY OF WEAVER BOOS CONSULTANTS, LLC AND IS NOT TO BE USED IN WHOLE OR IN PART, WITHOUT THE WRITTEN AUTHORIZATION OF WEAVER BOOS CONSULTANTS, LLC.

Weaver Boos Consultants

CHICAGO, IL
NAPERVILLE, IL
COLUMBUS, OH
DENVER, CO

FORT WORTH, TX
COLUMBIA, MO
EVANSVILLE, IN
RIVERSIDE, MO

GRAND RAPIDS, MI
SOUTH BEND, IN
SPRINGFIELD, IL
CLEARMONT, FL

APPX. C